PLOT.CEL

ms consultants, inc.
msconsultants.com

www.msconsultants.com

Ohio DOT Workspace
70\71 East Interchange 2E

ohdotV8i
60-06634_2E_Columbus

Batchplot Spec: \\msconsultants.com\files\production\03\60\06634_2E\standards\plotdrv\batchplt.spc
Pen Table: \\msconsultants.com\files\Production\03\60\06634_2E\deliverables\hrb\V8i_ms_stp.tbl
Plot Driver: \\msconsultants.com\files\Standards\ustn\ohdot\v8i\ms\plotting\PDF.pltcfg

34" x 22"

Model: Sheet
View: SHEET
Printed: 9/18/2018 @ 2:09:32 PM
By: hbrendlinger
File: \\msconsultants.com\files\Production\03\60\06634_2E\roadway\sheets\105322GT001.dgn

LOCATION MAP

LATITUDE: 39°57'19" N LONGITUDE: 82°58'56" W

SCALE IN MILES

0 .25 .5 .75 1

N

PORTION TO BE IMPROVED
INTERSTATE & DIVIDED HIGHWAY
UNDIVIDED STATE & FEDERAL ROUTES
OTHER ROADS

DESIGN DESIGNATION - SEE SHEETS 3, 4

DESIGN EXCEPTIONS

	DATE	SHEETS
HORIZONTAL STOPPING SIGHT DISTANCE (RAMP I-71 SB - I-70 EB)	9-26-17	3, 13, 599, 602
REDUCED SHOULDER WIDTH (I-71 SB TO I-70 EB, I-70 EB)	9-26-17	3, 13, 609, 612, 649, 651
REDUCED LANE WIDTH (I-71 SB TO I-70 EB, I-70 EB)	9-26-17	3, 13, 609, 612, 649, 651

UNDERGROUND UTILITIES

CONTACT BOTH SERVICES TWO WORKING DAYS **BEFORE YOU DIG**.

OHIO Utilities Protection SERVICE

Call Before You Dig
1-800-362-2764

(Non-members must be called directly)

OIL & GAS PRODUCERS
UNDERGROUND PROTECTION SERVICE
1-800-925-0988

PLAN PREPARED BY:

ms consultants, inc.
engineers, architects & planners
2221 Schrock Road
Columbus, Ohio 43229-1547
Tel 614.898.7100 Fax 614.898.7570
www.msconsultants.com

ENGINEERS SEAL: ROADWAY	ENGINEERS SEAL: STRUCTURES
STATE OF OHIO THOMAS J. HIBBARD E-54971 REGISTERED PROFESSIONAL ENGINEER	STATE OF OHIO GARY L. GARDNER, JR E-60105 REGISTERED PROFESSIONAL ENGINEER
SIGNED: DATE: 9/21/18	SIGNED: DATE: 9-21-18

STATE OF OHIO
DEPARTMENT OF TRANSPORTATION
FRA-70-14.54
PHASE 2E
CITY OF COLUMBUS
FRANKLIN COUNTY

INDEX OF SHEETS - SEE SHEET 2

MAINTENANCE OF TRAFFIC ENDORSEMENT

I HEREBY APPROVE THESE PLANS AND DECLARE THAT THE MAKING OF THIS IMPROVEMENT WILL NOT REQUIRE THE CLOSING TO TRAFFIC OF THE HIGHWAY EXCEPT AS NOTED ON SHEET 102, AND THAT PROVISIONS FOR THE MAINTENANCE AND SAFETY OF TRAFFIC WILL BE AS SET FORTH ON THE PLANS AND ESTIMATES.

CITY OF COLUMBUS

PORTIONS OF THIS PROJECT LIE WITHIN THE CITY OF COLUMBUS AND THE CITY IS ABSOLVED IN THE FUTURE OF ANY RESPONSIBILITIES FOR THE SWPPP, POST CONSTRUCTION BMP MAINTENANCE, AND DOCUMENTATION TO THE OEPA.

STANDARD CONSTRUCTION DRAWINGS

BP-2.1 7/17/15	MGS-1.1 1/19/18	P1S GR-5.3 1/18/13	HL-20.24 1/19/18	MT-98.11 1/20/17	TC-21.50 7/15/16
BP-2.2 7/18/08	MGS-2.1 1/19/18	A-1-69 7/19/02	HL-30.11 7/20/18	MT-98.20 7/18/14	TC-22.20 1/17/14
BP-2.3 7/18/14	MGS-3.1 1/19/18	AS-1-81 1/18/13	HL-30.21 1/17/14	MT-98.21 7/18/14	TC-41.10 7/19/13
BP-2.5 7/19/13	MGS-3.2 1/18/13		HL-30.22 1/17/14	MT-98.22 1/20/17	TC-41.20 10/18/13
BP-3.1 7/18/14	MGS-4.2 7/19/13	EXJ-4-87 7/19/02	HL-30.31 1/17/14	MT-98.28 1/20/17	TC-41.30 10/18/13
BP-5.1 7/20/18	MGS-4.3 1/18/13	EXJ-6-06 1/18/13	HL-30.32 1/17/14	MT-98.29 1/20/17	TC-41.40 10/18/13
BP-9.1 7/21/17	MGS-5.3 7/15/16		HL-30.33 1/17/14	MT-98.30 7/21/17	TC-41.50 10/18/13
			HL-30.41 1/19/18	MT-99.20 7/20/18	TC-42.10 10/18/13
CB-1.1 7/20/18	I-2.1 1/15/16	PSID-1-13 07/15/16	HL-40.10 1/20/17	MT-99.30 1/19/18	TC-42.20 10/18/13
CB-2.1 7/20/18	I-2.2 1/15/16	SBR-1-99 7/19/02	HL-40.20 7/20/18	MT-99.50 1/20/17	TC-51.11 1/15/16
CB-2.2 7/20/18	I-2.3 1/15/16	SICD-1-96 7/18/14	HL-50.11 1/16/15	MT-99.60 7/15/16	TC-52.10 10/18/13
CB-2.3 1/15/16		VPF-1-90 7/17/15	HL-50.21 7/20/18	MT-101.60 1/20/17	TC-52.20 7/20/18
CB-3.2 1/15/16	MH-1.2 1/15/16	CSB-2-56 2/2/59	HL-60.11 7/21/17	MT-101.70 7/20/18	TC-61.10 1/17/14
CB-3.3 1/15/16	MH-1.3 1/18/13	GSD-1-96 7/19/02	HL-60.12 7/15/16	MT-101.75 7/15/16	TC-61.30 1/20/17
			HL-60.21 7/20/18	MT-101.90 7/21/17	TC-64.10 1/20/17
DM-1.1 7/21/17	HW-2.2 7/20/18		HL-60.31 7/20/18	MT-102.10 1/20/17	TC-65.10 1/17/14
DM-1.2 1/18/13		HL-10.11 7/20/18		MT-102.20 7/18/14	TC-65.11 7/21/17
DM-4.1 7/20/18	RM-1.1 7/18/14	HL-10.12 1/20/17	MT-95.30 7/21/17	MT-103.10 1/19/18	TC-71.10 1/19/18
DM-4.2 7/20/12	RM-4.2 4/18/14	HL-10.13 7/20/18	MT-95.31 7/21/17	MT-105.10 7/19/13	TC-72.20 7/20/18
	RM-4.3 7/18/14	HL-10.31 1/19/18	MT-95.32 7/21/17	MT-110.10 7/19/13	TC-73.20 7/21/17
F-1.1 7/19/13	RM-4.4 7/21/17	HL-20.11 4/21/17	MT-95.40 1/20/17	MT-120.00 1/19/18	
F-3.1 7/19/13	RM-4.5 7/21/17	HL-20.13 1/19/18	MT-95.41 7/21/17	TC-7.65 7/20/18	
F-3.4 7/19/13	RM-4.6 7/19/13	HL-20.14 1/19/18	MT-95.45 7/21/17	TC-9.30 1/19/18	
WQ-1.2 1/15/16	RM-5.1 7/18/14	HL-20.21 1/19/18	MT-95.50 7/21/17	TC-12.30 1/19/18	
			MT-95.82 7/19/13	TC-15.115 7/20/18	ITS-12.10 7/20/18
	P1S GR-1.1 1/18/13		MT-97.10 7/18/14	TC-21.10 7/21/17	ITS-14.10 7/17/15
	P1S GR-2.1 1/18/13		MT-97.12 1/20/17	TC-21.20 7/20/18	ITS-14.11 7/17/15
	P1S GR-3.2 1/18/13		MT-98.10 1/20/17		ITS-14.50 7/20/18

SUPPLEMENTAL SPECIFICATIONS

800	1/18/19	902	12/31/12
804	1/20/17	904	7/15/16
809	1/19/18	907	1/20/12
813	7/20/18	913	4/21/17
814	7/15/16	914	7/15/16
816	7/20/18	921	4/20/12
821	4/20/12	931	10/21/16
831	10/21/16	939	7/17/15
832	1/17/14		
836	1/19/18		
839	7/17/15		
840	7/20/18		
846	4/17/15		
869	10/17/14		
875	1/17/14		
878	4/21/17		

SPECIAL PROVISIONS

ITS	12/5/17

PROJECT DESCRIPTION

THIS PROJECT CONSISTS OF THE RECONSTRUCTION OF 0.76 MILES OF I-70 IN THE CITY OF COLUMBUS, INCLUDING THE RECONFIGURATION OF THE I-70/I-71 SYSTEM INTERCHANGE. WORK INCLUDES THE RECONFIGURATION OF LOCAL STREET ACCESS TO THE FREEWAYS AND THE CONSTRUCTION OF A SYSTEM OF ONE-WAY ROADS (MOUND ST. WESTBOUND AND FULTON ST. EASTBOUND) PROVIDING ACCESS TO AND FROM THE FREEWAYS. WORK ALSO INCLUDES THE CONSTRUCTION OF 4 BRIDGES WITHIN THE INTERCHANGE AND CROSSING OVER AND UNDER THE FREEWAY SYSTEM, RECONSTRUCTION OF THE TRUNK LINE STORM SEWERS, REPLACEMENT OF THE FREEWAY LIGHTING SYSTEMS, RESURFACING AND RECONSTRUCTION OF CITY STREET INTERSECTIONS INCLUDING TRAFFIC CONTROL UPGRADES CONNECTING WITH THE ACCESS ROADS.

EARTH DISTURBED AREAS

PROJECT EARTH DISTURBED AREA:	56.1 ACRES
ESTIMATED CONTRACTOR EARTH DISTURBED AREA:	24.0 ACRES
NOTICE OF INTENT EARTH DISTURBED AREA:	80.1 ACRES

LIMITED ACCESS

THIS IMPROVEMENT IS ESPECIALLY DESIGNED FOR THROUGH TRAFFIC AND HAS BEEN DECLARED A LIMITED ACCESS HIGHWAY OR FREEWAY BY ACTION OF THE DIRECTOR IN ACCORDANCE WITH THE PROVISIONS OF SECTION 5511.02 OF THE OHIO REVISED CODE.

2016 SPECIFICATIONS

THE STANDARD SPECIFICATIONS OF THE STATE OF OHIO, DEPARTMENT OF TRANSPORTATION, INCLUDING CHANGES AND SUPPLEMENTAL SPECIFICATIONS LISTED IN THE PROPOSAL SHALL GOVERN THIS IMPROVEMENT.

CITY OF COLUMBUS APPROVALS

CITY OF COLUMBUS SIGNATURES ON THIS PLAN SIGNIFY ONLY CONCURRENCE WITH THE GENERAL PURPOSES AND GENERAL LOCATION OF THE PROJECT. ALL TECHNICAL DETAILS REMAIN THE RESPONSIBILITY OF THE ENGINEER PREPARING THE PLANS.

CITY OF COLUMBUS:

APPROVED ______
DATE 9/26/18 DESIGN SECTION ENGINEER, DIVISION OF DESIGN AND CONSTRUCTION

APPROVED ______ for Patricia Austin
DATE 10-2-18 ADMINISTRATOR, DIVISION OF POWER

TEH APPROVED ______ FOR RC WESTERFIELD
DATE 10/29/18 ADMINISTRATOR, DIVISION OF WATER

APPROVED MDT ______
DATE 10-3-18 ADMINISTRATOR, DIVISION OF SEWERAGE AND DRAINAGE

APPROVED ______
DATE 10-29-2018 DIRECTOR, DEPARTMENT OF PUBLIC UTILITIES

APPROVED ______ C102
DATE 9/27/18 FIRE PREVENTION BUREAU, DIVISION OF FIRE

APPROVED ______
DATE 9/27/18 DIRECTOR, DEPARTMENT OF RECREATION AND PARKS

APPROVED ______
DATE 10/30/18 CITY ENGINEER/ADMINISTRATOR, DIVISION OF DESIGN AND CONSTRUCTION

APPROVED ______
DATE 10-31-18 DIRECTOR, DEPARTMENT OF PUBLIC SERVICE

APPROVED ______
DATE 9/27/18 ENGINEERING SUPERVISOR, DEPARTMENT OF TECHNOLOGY

OHIO DEPARTMENT OF TRANSPORTATION:

APPROVED ______
DATE 10/1/18 **DISTRICT DEPUTY DIRECTOR**

APPROVED ______
DATE ______ DIRECTOR, DEPARTMENT OF TRANSPORTATION

3434-E

FEDERAL PROJECT NO. **E040(632)**

PID NO. **105322**

CONSTRUCTION PROJECT NO.

RAILROAD INVOLVEMENT **NONE**

FRA-70-14.54

ms consultants, inc.

PLOT.CEL

ms consultants, inc.
msconsultants.com

	FROM	TO
TITLE SHEET	1	
PLAN SHEET INDEX	2	
DESIGN DESIGNATIONS	3	- 4
SCHEMATIC PLAN	5	- 6
GEOMETRIC PLAN AND ALIGNMENT DATA	7	- 15
REFERENCE POINTS AND BENCHMARKS	16	
TYPICAL SECTIONS		
LEGEND	17	
FREEWAY ROADS		
TRANS I-70 EB (WEST SIDE)	18	- 20
I-70 EB	21	- 24
TRANS I-70 EB (EAST SIDE)	25	- 26
TRANS I-70 WB (WEST SIDE)	27	- 29
I-70 WB	30	- 31
TRANS RAMP P2 (CENTRAL)	32	
TRANS I-70 WB (EAST SIDE)	33	- 35,36A
TRANS I-71 SB (EAST SIDE)	36	- 37
TRANS I-71 NB	38	
RAMP P2	39	
TRANS RAMP P2 EAST	40	
TRANS RAMP N1	41	
RAMP N1 (I-70 EB EXIT TO PARSONS AVE)	42	- 45
RAMP N2 (FULTON ST EB ENTRANCE TO I-71 NB)	46	- 47
RAMP N3 (FULTON ST EB ENTRANCE TO I-70 EB)	48	- 50
RAMP N4 (I-71 NB)	51	- 53
TRANS RAMP N4	54	- 55
RAMP Q3 (I-71 SB TO I-70 EB)	56	- 57
TRANS I-71 SB (WEST SIDE)	58	- 60
CITY STREETS		
FULTON ST.	61	- 63
MOOBERRY ST	64	
PARSONS AVE	65	
TRANS PARSONS AVE	66	
THIRD ST.	67	
PRIVATE DRIVES		
AMBULANCE DR/CHILDRENS DR	68	
---- not used ----	69	- 74
GENERAL NOTES		
GENERAL NOTES	75	- 89
---- not used ----	90	- 99
MAINTENANCE OF TRAFFIC		
MT GENERAL NOTES	100	- 112
MT SUB SUMMARY	113	- 125
---- not used ----	126	- 137
MT TYPICAL DETAILS	138	- 186,151A-E,154A-C
MT PHASE 1 PLAN	187	- 318,215A,223A,228A, 234A,235A,236A,237A,238A,239A
---- not used ----	191,192,199-204,234,245,	
---- not used ----	246, 299-308, 319-369	
MT PHASE 2 PLAN	370	- 410,378A,385A,394A
---- not used ----	411	- 414
MT PHASE 3 PLAN	415	- 434,416A,417A-C,423A
MT PHASE 4 PLAN	435	- 464, 460A-H,464A
---- not used ----	456, 465-474	
MT PHASE 5 PLAN	475	- 491
---- not used ----	492	- 519

	FROM	TO
GENERAL SUMMARY		
GENERAL SUMMARY	520	- 528
---- not used ----	529	- 533
SUB SUMMARY		
SUB SUMMARY	534	- 556
---- not used ----	557	- 574
PROJECT SITE PLAN		
PROJECT SITE PLAN	575	- 578
(INCLUDING BMP REFERENCE INFORMATION)		
TREE REMOVAL PLAN	578A	
PLAN AND PROFILE		
INDEX MAP OF PLAN VIEW SHEETS	579	
INTERCHANGE PLAN VIEW SHEETS		
TRANS I-70 EB	580	- 587
I-70 WB	588	- 615,598A
I-70 EB	616	- 652
INTERCHANGE & RAMPS	658	- 670
---- not used ----	653-657, 663-667, 671-673	
FREEWAY ROADS - PROFILES		
TRANS I-70 EB (WEST SIDE)	674	- 675
I-70 EB	676	- 681
TRANS I-70 EB (EAST SIDE)	682	- 683
TRANS I-70 WB (CENTRAL)	684	- 685
TRANS RAMP P2 WEST	686	- 687
TRANS I-70 WB (EAST SIDE)	688	- 690
TRANS I-71 SB (EAST SIDE)	691	- 693
TRANS I-71 NB	694	
RAMP P2	695	- 697
TRANS RAMP P2 EAST	698	
TRANS RAMP N1	699	
RAMP N1 (I-70 EB EXIT TO PARSONS AVE)	700	- 702
RAMP N2 (FULTON ST EB ENTRANCE TO I-71 NB)	703	
RAMP N3 (FULTON ST EB ENTRANCE TO I-70 EB)	704	- 706
RAMP N4 (I-71 NB)	707	- 708
TRANS RAMP N4	709	
RAMP Q3 (I-71 SB TO I-70 EB)	710	- 712
TRANS I-71 SB WEST SIDE)	713	- 715
RAMP THIRD ST. TO I-70 EB	715A	- 715B
CITY STREETS - PLAN & PROFILE or PROFILE		
FULTON ST.	716	- 723
MOOBERRY ST	724	- 725
PARSONS AVE	726	- 729
TRANS PARSONS AVE	730	
THIRD ST.	731	- 732
GRANT AVE.	733	- 734
PRIVATE DRIVES - PROFILES		
AMBULANCE DR/CHILDRENS DR	735	
---- not used ----	736	- 749

	FROM	TO
CROSS SECTIONS		
INDEX MAP	750	
TYPICAL CROSS SECTION QUANTITY CALCULATION	751	
FREEWAY ROADS		
TRANS I-70 EB (WEST SIDE)	752	- 762
I-70 EB	763	- 801
TRANS I-70 EB (EAST SIDE)	802	- 810
TRANS I-70 WB (WEST SIDE)	811	- 824
TRANS RAMP P2 (CENTRAL)	825	- 832
TRANS I-70 WB (EAST SIDE)	833	- 851
TRANS I-71 SB (EAST SIDE)	852	- 867
TRANS I-71 NB	868	- 871
RAMP P2	872	- 878
TRANS RAMP P2 EAST	879	- 883
TRANS RAMP N1	884	- 885
RAMP N1 (I-70 EB EXIT TO PARSONS AVE)	886	- 903
RAMP N2 (FULTON ST EB ENTRANCE TO I-71 NB)	904	- 907
RAMP N3 (FULTON ST EB ENTRANCE TO I-70 EB)	908	- 918
RAMP N4 (I-71 NB)	919	- 930
TRANS RAMP N4	931	- 933
RAMP Q3 (I-71 SB TO I-70 EB)	934	- 945
TRANS I-71 SB WEST SIDE)	946	- 961
RAMP THIRD ST. TO I-70 EB	961A	- 961D
CITY STREETS		
FULTON ST.	962	- 967
MOOBERRY ST	968	- 982
PARSONS AVE	983	- 987
TRANS PARSONS AVE	988	- 989
THIRD ST.	989A	
PRIVATE DRIVES		
AMBULANCE DR	990	
CHILDRENS DR	991	- 992
---- not used ----	993	- 1050
MISCELLANEOUS DETAILS		
SUPERELEVATION TABLES	1051	- 1084
INTERSECTION DETAILS	1085	- 1094
---- not used ----	1095	- 1100
FENCE & BARRIER DETAILS	1101	- 1110
CURB AND SIDEWALK DETAILS	1111	- 1114
KNEE WALL AND FENCE INSTALLATION	1115	
DRIVE DETAILS	1116	1118
PAVEMENT JOINT DETAILS	1119	- 1131
PAVEMENT DETAILS	1132	1140
GRADING PLAN	1141	- 1149
---- not used ----	1150-1151	
GORE DETAILS	1152	- 1175
---- not used ----	1160-1162, 1169, 1176-1194	
CITY OF COLUMBUS STANDARD DRAWINGS		
ROADWAY	1195	- 1219
---- not used ----	1203, 1212, 1213	
UTILITY	1220	- 1256
DRAINAGE DETAILS		
STORM SEWER PROFILES	1257	- 1260
	1257A-G,1258A-G,1259A-G,1260A-G	
DRAINAGE DETAILS	1260H	- 1260N

	FROM	TO
WATERLINE RELOCATION PLANS	1261	- 1282
---- not used ----	1263, 1267, 1275, 1276	
SANITARY SEWER DETAILS	1283	- 1285
POWER SERVICE DETAILS	1286	- 1293
---- not used ----	1294-1299	
PAVEMENT MARKING AND SIGNING PLAN	1300	- 1366,1317A,1342A, 1345A,1356A,1366A
---- not used ----	1307, 1313, 1314, 1325	
TRAFFIC SIGNAL AND INTERCONNECT PLAN	1367	- 1400
	1379A,1389A, 1389B, 1389C,1393A	
ITS MAINTENANCE PLAN	1401	- 1432,1410A-B,1419A-E, 1420A-E,1428A-E ,1429B-E, 1431A-C, 1432A-Q
---- not used ----	1429, 1429A, 1431D-E, 1432N	
TRAFFIC SURVEILLANCE COMMUNICATIONS HU	1433	- 1435,1435A-F
LIGHTING PLAN	1436	- 1506
LANDSCAPING PLAN	1507	- 1533
---- not used ----	1534	- 1546
STRUCTURES		
STRUCTURE LOCATION MAP	1547	
STRUCTURES - RETAINING WALLS		
RETAINING WALL I-11 REFACING	1548	- 1551
RETAINING WALL I-8A	1552	- 1562
RETAINING WALL I-9A-1	1563	- 1571
RETAINING WALL I-9A-2	1572	- 1577
RETAINING WALL I-13-2	1578	- 1597,1597A-B
RETAINING WALL I-13A	1598	- 1605
RETAINING WALL I-13B	1606	- 1609
RETAINING WALL I-13D	1610	- 1623
RETAINING WALL I-13E	1624	- 1627
RETAINING WALL I-7	1628	- 1636
TEMPORARY RETAINING WALL I-13T	1637	- 1643A-D
MOMENT SLAB DETAILS	1644	- 1647,1644A
---- not used ----	1643	
STRUCTURES - BRIDGES		
FRA-70-1461P	1648	- 1712
FRA-70-1476	1713	- 1798
---- not used ----	1790	
FRA-70-1493L&R	1799	- 1829
FRA-70-1498	1830	- 1905
	1833A,1869A-B,1873A,1890A,1892A-B	
FRA-33-1747	1906	- 1914
---- not used ----	1915	- 1919
STRUCTURES - AESTHETICS		
STRUCTURES - AESTHETICS	1920	- 1931,1921A,1927A
SOIL PROFILE SHEETS	1932	- 2317,2279A

NOTE:

RIGHT OF WAY PLANS FOR THIS PROJECT WERE PREPARED AS PART OF PROJECT FRA-70-14.48 PID 77370 #2928E AND ARE NOT INCLUDED IN THIS PLAN SET

CALCULATED | CHECKED

PLAN SHEET INDEX

FRA-70-14.54

Batchplot Spec: \\msconsultants.com\files\production\03\60\06634..2E\standards\plotdrv\batchplt.586
Pen Table: N:\03\60\06634..2E\standards\tables\V8i_ms_std_NoClouds.tbl
Plot Driver: \\msconsultants.com\files\Standards\astm\ohdot\v8i\ms\plotting\PDF.pltcfg
Ohio DOT Workspace
70\71 East Interchange 2E
www.msconsultants.com
DGN: ohdotV8i
PCF: 60-06634..2E_Columbus
1" 0.5" 0
34" x 22"
Model: Sheet
Printed: 2/12/2019 @ 2:20:21 PM
File: N:\03\60\06634..2E\roadway\sheets\05322608001.dgn
View: SHEET
By: hbrendlinger

ms consultants, inc.

PLOT.CEL

ms consultants, inc.
msconsultants.com

www.msconsultants.com
Ohio DOT Workspace
70\71 East Interchange 2E

1"
0.5"
0

DGF: ohdot\V8i
PCF: 60-06634_2E_Columbus

Batchplot Spec: \\msconsultants.com\files\production\03\60\06634_2E\standards\plotdr\batchplt.spc
Pen Table: N:\03\60\06634_2E\standards\tables\V8i_ms_std_06634_2D_Plan View.tbl
Plot Driver: \\msconsultants.com\files\Standards\ustn\ohdot\v8i\ms\plotting\PDF.pltclg

Model: Sheet
Printed: 6/19/2018 @ 7:54:20 AM
File: N:\03\60\06634_2E\roadway\sheets\05322G0003.dgn
View: FENCE_VIEW1
By: jdouglas

34" x 22"

FREEWAY ROADS

DESIGN DESIGNATION - I-70/I-71 (WEST END)

CURRENT ADT (2010) 128,400
DESIGN YEAR ADT (2035) 157,500
DESIGN HOURLY VOLUME (2035) 11,930
DIRECTIONAL DISTRIBUTION 0.51
TRUCK (24 HOUR B&C) 14 %
To 10 %
DESIGN SPEED 60 MPH
LEGAL SPEED 55 MPH

DESIGN FUNCTIONAL CLASSIFICATION - INTERSTATE

DESIGN EXCEPTION:
N/A

DESIGN DESIGNATION - I-70 (BETWEEN RAMPS N4 & Q3)

CURRENT ADT (2010) 65,000
DESIGN YEAR ADT (2035) 78,300
DESIGN HOURLY VOLUME (2035) 5,110
DIRECTIONAL DISTRIBUTION 0.56
TRUCK (24 HOUR B&C) 14 %
To 10 %
DESIGN SPEED 60 MPH
LEGAL SPEED 55 MPH

DESIGN FUNCTIONAL CLASSIFICATION - INTERSTATE

DESIGN EXCEPTION:
N/A

DESIGN DESIGNATION - I-70/I-71 (EAST END)

CURRENT ADT (2010) 133,810
DESIGN YEAR ADT (2035) 193,300
DESIGN HOURLY VOLUME (2035) 15,000
DIRECTIONAL DISTRIBUTION 0.58
TRUCK (24 HOUR B&C) 8 %
To 7 %
DESIGN SPEED 60 MPH
LEGAL SPEED 55 MPH

DESIGN FUNCTIONAL CLASSIFICATION - INTERSTATE

DESIGN EXCEPTION:
1) LANE WIDTH = 11.0'
(NDC = 12.0')

2) SHOULDER WIDTH = 4.0' LT & RT
(NDC = 10.0' LT & RT)

DESIGN DESIGNATION - RAMP Q3 (I-71 SB TO I-70 EB)

CURRENT ADT (2010) 33,100
DESIGN YEAR ADT (2035) 41,300
DESIGN HOURLY VOLUME (2035) 4,020
DIRECTIONAL DISTRIBUTION N/A
TRUCK (24 HOUR B&C) 6 %
To 6 %
DESIGN SPEED 55 MPH
LEGAL SPEED 55 MPH

DESIGN FUNCTIONAL CLASSIFICATION - INTERSTATE

DESIGN EXCEPTION:
HORIZONTAL STOPPING SIGHT DISTANCE = 313'
(EXISTING = 388', NDC = 495')

1) LANE WIDTH = 11.0'
(NDC = 12.0')

2) SHOULDER WIDTH = 4.0' TO < 10.0' RT
(NDC = 10.0' RT)

DESIGN DESIGNATION - RAMP N4 (I-71 NB)

BEFORE RAMP N2 MERGE
CURRENT ADT (2010) 25,600
DESIGN YEAR ADT (2035) 42,300
DESIGN HOURLY VOLUME (2035) 3,710
DIRECTIONAL DISTRIBUTION N/A
TRUCK (24 HOUR B&C) 15 %
To 12 %
DESIGN SPEED 55 MPH - 60 MPH
LEGAL SPEED 55 MPH

DESIGN FUNCTIONAL CLASSIFICATION - INTERSTATE

DESIGN EXCEPTION:

DESIGN DESIGNATION - RAMP P4 (I-70 WB TO I-71 NB)

CURRENT ADT (2010) N/A
DESIGN YEAR ADT (2035) 23,800
DESIGN HOURLY VOLUME (2035) 1,880
DIRECTIONAL DISTRIBUTION N/A
TRUCK (24 HOUR B&C) 7 %
To 9 %
DESIGN SPEED 55 MPH
LEGAL SPEED 55 MPH

DESIGN FUNCTIONAL CLASSIFICATION - INTERSTATE

DESIGN EXCEPTION:
N/A

SERVICE RAMPS

DESIGN DESIGNATION - RAMP N1

CURRENT ADT (2010) N/A
DESIGN YEAR ADT (2035) 3,700
DESIGN HOURLY VOLUME (2035) 340
DIRECTIONAL DISTRIBUTION N/A
TRUCK (24 HOUR B&C) 5 %
To 9 %
DESIGN SPEED VARIABLE
LEGAL SPEED N/A

DESIGN EXCEPTION:
N/A

DESIGN DESIGNATION - RAMP N2

CURRENT ADT (2010) N/A
DESIGN YEAR ADT (2035) 5,400
DESIGN HOURLY VOLUME (2035) 640
DIRECTIONAL DISTRIBUTION N/A
TRUCK (24 HOUR B&C) 4 %
To 12 %
DESIGN SPEED VARIABLE
LEGAL SPEED N/A

DESIGN EXCEPTION:
N/A

DESIGN DESIGNATION - RAMP N3

CROSSING OVER I-70
CURRENT ADT (2010) N/A
DESIGN YEAR ADT (2035) 17,000
DESIGN HOURLY VOLUME (2035) 2,100
DIRECTIONAL DISTRIBUTION N/A
TRUCK (24 HOUR B&C) 5 %
To 12 %
DESIGN SPEED VARIABLE
LEGAL SPEED N/A

DESIGN EXCEPTIONS:
N/A

DESIGN DESIGNATION - RAMP N3

AFTER RAMP N2/N3 SPLIT
CURRENT ADT (2010) N/A
DESIGN YEAR ADT (2035) 11,600
DESIGN HOURLY VOLUME (2035) 1,460
DIRECTIONAL DISTRIBUTION N/A
TRUCK (24 HOUR B&C) 5 %
To 12 %
DESIGN SPEED VARIABLE
LEGAL SPEED N/A

DESIGN EXCEPTION:
N/A

DESIGN DESIGNATION - RAMP P2

AFTER RAMP P1/P2 SPLIT
CURRENT ADT (2010) N/A
DESIGN YEAR ADT (2035) 14,500
DESIGN HOURLY VOLUME (2035) 1,630
DIRECTIONAL DISTRIBUTION N/A
TRUCK (24 HOUR B&C) 3 %
To 3 %
DESIGN SPEED VARIABLE
LEGAL SPEED N/A

DESIGN EXCEPTION:
N/A

CALCULATED | CHECKED

DESIGN DESIGNATION

FRA-70-14.54

ms consultants, inc.

PLOT.CEL

ms consultants, inc.
msconsultants.com

www.msconsultants.com

Ohio DOT Workspace
70\71 East Interchange 2E

1"
0.5"
0

PCF: 60-06634_2E_Columbus
DGN: ohdot\V8i

Batchplot Spec: \\msconsultants.com\files\production\03\60\06634_2E\standards\plotdrv\batchplt.spc
Pen Table: N:\03\60\06634_2E\standards\tables\V8i_ms_std_06634_2D_Plan View.tbl
Plot Driver: \\msconsultants.com\files\Standards\usetn\ohdot\v8i\ms\plotting\PDF.pltcfg

Model: Sheet View: FENCE_VIEW1
Printed: 6/19/2018 @ 7:54:22 AM By: jdoughas
File: N:\03\60\06634_2E\roadway\sheets\1053220804.dgn

34" x 22"

CITY STREETS

DESIGN DESIGNATION - FULTON ST.

EAST OF THIRD ST. & WEST OF GRANT AVE.

CURRENT ADT (2010) 600
DESIGN YEAR ADT (2035) 14,200
DESIGN HOURLY VOLUME (2035) 1,800
DIRECTIONAL DISTRIBUTION N/A
TRUCK (24 HOUR B&C) 2 %
DESIGN SPEED 35 MPH
LEGAL SPEED 35 MPH

DESIGN FUNCTIONAL CLASSIFICATION -
MINOR ARTERIAL (URBAN)

DESIGN EXCEPTION:
N/A

DESIGN DESIGNATION - MOOBERRY ST.

CURRENT ADT (2010) 3,000
DESIGN YEAR ADT (2035) 7,100
DESIGN HOURLY VOLUME (2035) 690
DIRECTIONAL DISTRIBUTION 0.85
TRUCK (24 HOUR B&C) 2 %
DESIGN SPEED 30 MPH
LEGAL SPEED 25 MPH

DESIGN FUNCTIONAL CLASSIFICATION -
COLLECTOR (URBAN)

DESIGN EXCEPTION:
N/A

DESIGN DESIGNATION - PARSONS AVE.

CURRENT ADT (2010) 23,000
DESIGN YEAR ADT (2035) 28,100
DESIGN HOURLY VOLUME (2035) 4,700
DIRECTIONAL DISTRIBUTION 0.57
TRUCK (24 HOUR B&C) 2 %
DESIGN SPEED 40 MPH
LEGAL SPEED 35 MPH

(FOR INFORMATION)

DESIGN DESIGNATION - THIRD ST.

CURRENT ADT (2010) 23,500
DESIGN YEAR ADT (2035) 17,300
DESIGN HOURLY VOLUME (2035) 2,210
DIRECTIONAL DISTRIBUTION N/A
TRUCK (24 HOUR B&C) 2 %
DESIGN SPEED 35 MPH
LEGAL SPEED 35 MPH

DESIGN FUNCTIONAL CLASSIFICATION -
MINOR ARTERIAL (SOUTH OF MOUND)
PRINCIPAL ARTERIAL (NORTH OF MOUND)

DESIGN EXCEPTION:
N/A

DESIGN DESIGNATION - HIGH ST.

CURRENT ADT (2010) 18,820
DESIGN YEAR ADT (2035) 20,700
DESIGN HOURLY VOLUME (2035) 1,840
DIRECTIONAL DISTRIBUTION 0.65
TRUCK (24 HOUR B&C) 2 %
DESIGN SPEED 35 MPH
LEGAL SPEED 35 MPH

DESIGN FUNCTIONAL CLASSIFICATION -
PRINCIPAL ARTERIAL

DESIGN EXCEPTION:
N/A

DESIGN DESIGNATION - FOURTH ST.

CURRENT ADT (2010) 14,500
DESIGN YEAR ADT (2035) 15,100
DESIGN HOURLY VOLUME (2035) 1,590
DIRECTIONAL DISTRIBUTION N/A
TRUCK (24 HOUR B&C) 2 %
DESIGN SPEED 35 MPH
LEGAL SPEED 35 MPH

DESIGN FUNCTIONAL CLASSIFICATION -
MINOR ARTERIAL (SOUTH OF FULTON ST.)
PRINCIPAL ARTERIAL (NORTH OF FULTON ST.)

DESIGN EXCEPTION:
N/A

DESIGN DESIGNATION - FIFTH ST.

CURRENT ADT (2010) 2,000
DESIGN YEAR ADT (2035) 5,200
DESIGN HOURLY VOLUME (2035) 450
DIRECTIONAL DISTRIBUTION 0.56
TRUCK (24 HOUR B&C) 2 %
DESIGN SPEED 25 MPH
LEGAL SPEED 25 MPH

DESIGN FUNCTIONAL CLASSIFICATION -
LOCAL

DESIGN EXCEPTION:
N/A

DESIGN DESIGNATION - FRONT ST.

CURRENT ADT (2010) 10,500
DESIGN YEAR ADT (2035) 26,500
DESIGN HOURLY VOLUME (2035) 2,500
DIRECTIONAL DISTRIBUTION 0.58
TRUCK (24 HOUR B&C) 2 %
DESIGN SPEED 35 MPH
LEGAL SPEED 35 MPH

DESIGN FUNCTIONAL CLASSIFICATION -
MINOR ARTERIAL

DESIGN EXCEPTION:
N/A

CALCULATED | CHECKED

DESIGN DESIGNATION

FRA-70-14.54

ms consultants, inc.

PLOT.CEL

ms consultants, inc.
msconsultants.com

www.msconsultants.com

Ohio DOT Workspace
70\71 East Interchange 2E

0 0.5" 1"

Batchplot Spec: \\msconsultants.com\Files\production\03\60\06634_2E\standards\plotdr\batchplt.spc
Pen Table: \\msconsultants.com\Files\Standards\ustn\ohdot\V8i\ms\plotting\pen\V8i_ms_std.tbl
Plot Driver: \\msconsultants.com\Files\Standards\ustn\ohdot\V8i\ms\plotting\PDF.pltcfg
PDF: ohdot.V8i
DGN: 60-06634_2E_Columbus

Model: Sheet @ 11:27:05 AM View: FENCE_VIEW1
Printed: 7/23/2018 By: dholl
File: N:\03\60\06634_2E\roadway\sheets\105322608005.dgn

34" x 22"

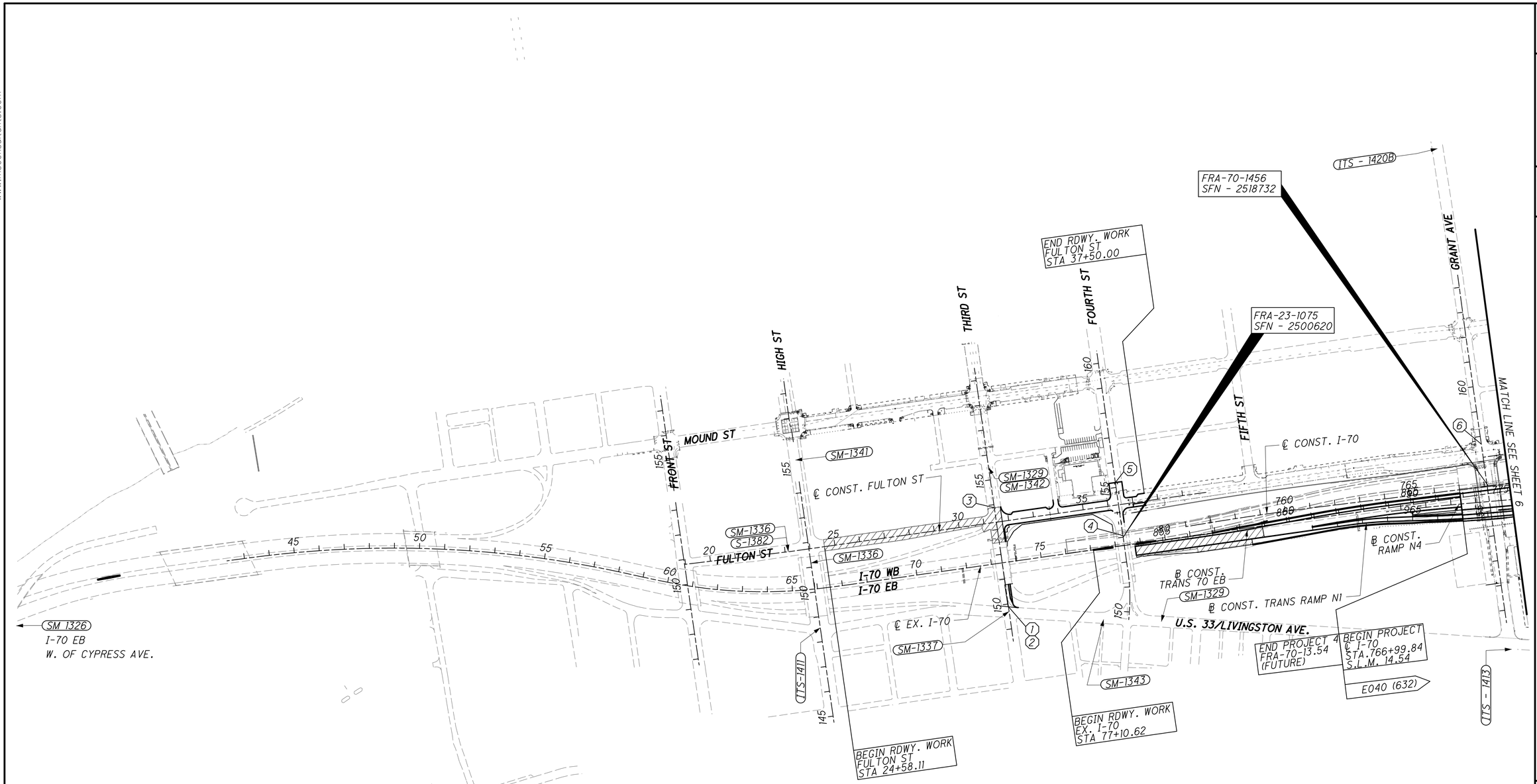

LEGEND

PAVEMENT RESURFACING PLANS (ROADWAY PLANS)

ADDITIONAL WORK LIMITS (WITH SHEET REFERENCES)

SIGNING & MARKING	(1300 - 1366)	SM-XXXX
SIGNALS	(1367 - 1400)	S-XXXX
ITS	(1401-1435)	ITS-XXXX

1. BEGIN ROADWAY WORK THIRD ST. STA. 149+89.09
2. BEGIN ROADWAY WORK THIRD ST. TO I-70 EB RAMP STA. 300+26.15
3. END ROADWAY WORK THIRD ST. STA. 153+87.58
4. BEGIN ROADWAY WORK FOUTTH ST. STA. 153+27.92
5. END ROADWAY WORK FOURTH ST. STA. 155+20.00
6. BEGIN ROADWAY WORK GRANT AVE. STA. 157+61.69

   END ROADWAY WORK GRANT AVE. STA. 157+83.21

REFERENCE	SHEET
GEOMETRICS & ALIGNMENT DATA	7-15
REFERENCE POINTS & BENCHMARKS	16
INTERSECTION DETAILS	1085-1094

HORIZONTAL SCALE IN FEET
0 100 200 400

CALCULATED | CHECKED

SCHEMATIC PLAN

FRA-70-14.54

ms consultants, inc.

PLOT.CEL

ms consultants, inc.
msconsultants.com

www.msconsultants.com

Ohio DOT Workspace
70\71 East Interchange 2E

0 0.5" 1"

Batchplot Spec: \\msconsultants.com\files\production\03\60\06634_2E\standards\plotdir\batchplt.spc
Pen Table: \\msconsultants.com\files\Standards\ustn\ohdot\V8i\ms\plotting\pen\V8i_ms_std.tbl
Plot Driver: \\msconsultants.com\files\Standards\ustn\ohdot\V8i\ms\plotting\PDF.pltcfg
DGN: ohdot.V8i
DCF: 60-06634_2E_Columbus

34" x 22"

Model: Sheet
Printed: 7/23/2018 @ 11:27:15 AM
File: N:\03\60\06634_2E\roadway\sheets\05322608006.dgn
View: FENCE_VIEW1
By: dhall

ITS-1420D
WASHINGTON AVE.
& FRANKLIN AVE

ITS-1420E
I-71 SB &
FRANKLIN AVE

SM-1334

END RDWY. WORK
TRANS. I-71SB
STA 991+25.00

BEGIN RDWY. WORK
TRANS. I-71 SB (E)
STA 214+56.80

R-1193

℄ CONST. PARSONS AVE.

BEGIN RDWY. WORK
TRANS. I-70WB
STA 690+03.60

BEGIN RDWY. WORK
TRANS. I-71SB
STA 969+03.60

℄ CONST. TRANS RAMP N4

END RDWY. WORK
TRANS. RAMP N4
STA. 694+18.27

RESUME RDWY. WORK
TRANS I-70WB
STA 217+58.34

BEGIN RDWY. WORK
TRANS. RAMP P2
STA 791+77.25

BEGIN RDWY. WORK
RAMP N3
STA 869+26.78

SUSPEND RDWY. WORK
TRANS I-70WB
STA 682+55.16

END RDWY. WORK
PARSONS AVE
STA 86+90.29

MOUND ST.

FRA-70-1476
SFN - 2518791

SM-1345

END PROJECT
I-70
STA 807+35.02
S.L.M. 15.30

E040 (632)

℄ CONST. TRANS. RAMP P2
℄ CONST. TRANS I-70 WB
℄ CONST. TRANS I-71 SB (E)
℄ CONST. I-70
℄ CONST. RAMP P2

END RDWY. WORK
TRANS I-70 WB
STA 245+03.39

ENGLER ST.

FULTON ST.

MATCH LINE SEE SHEET 5

OHIO AVE

CHAMPION AVE

℄ CONST. TRANS I-70 WB
℄ CONST. TRANS I-71 SB

℄ CONST. RAMP N1
℄ CONST. RAMP N3
℄ CONST. RAMP N4
℄ CONST. RAMP N2

FRA-70-1461P
SFN - 2518759

FRA-70-1493L&R
SFN - 2504812 (R)
SFN - 2504782 (L)

BEGIN RDWY. WORK
PARSONS AVE
STA 179+67.62

SM-1344

FRA-70-1498
SFN - 2518880

℄ CONST CHILDRENS DR

BEGIN RDWY. WORK
CHILDRENS DR
STA 580+00.00

BEGIN RDWY. WORK
AMBULANCE DR
STA 691+05.00

℄ CONST.
AMBULANCE DR.

℄ CONST. RAMP Q3
℄ CONST. MOOBERRY ST.

END RDWY. WORK
MOOBERRY ST
STA 904+10.00

SM-1349

SM-1349
CARPENTER ST

EX. FRA-70-1525
SFN - 2504847

GILBERT ST

22nd ST.

END RDWY. WORK
TRANS I-70 EB
STA 218+87.13

℄ CONST. TRANS I-70 EB

℄ CONST. MOOBERRY ST.

SM-1332
I-70 EB
W. OF LINWOOD AVE.

ITS-1418
LIVINGSTON AVE. TO I-70
AT KELTON
(1419B-1419E)

LEGEND

▨ PAVEMENT RESURFACING PLANS (ROADWAY PLANS)

① PROPOSED MOOBERRY ST.

② EXISTING MOOBERRY ST (TO BE REMOVED)

③ PARSONS AVE.

ADDITIONAL WORK LIMITS (WITH SHEET REFERENCES)

SIGNING & MARKING	(1300 - 1366)	SM-XXXX
SIGNALS	(1367 - 1400)	S-XXXX
ITS	(1401-1435)	ITS-XXXX

N

0 100 200 400
HORIZONTAL
SCALE IN FEET

CALCULATED | CHECKED

SCHEMATIC PLAN

FRA-70-14.54

ms consultants, inc.

PLOT.CEL

ms consultants, inc.
msconsultants.com

Ohio DOT Workspace
70\71 East Interchange 2E
www.msconsultants.com

Batchplot Spec: \\msconsultants.com\files\production\03\60\06634_2E\standards\plotdrv\batchplt.spec
Pen Table: \\msconsultants.com\files\Standards\ustn\ohdot\V8i\ms\plotting\pen\V8i_ms_std.tbl PCF: ohdotV8i
Plot Driver: \\msconsultants.com\files\Standards\ustn\ohdot\v8i\ms\plotting\PDF.pltcfg

34" x 22"

Model: Sheet View: FENCE_VIEW1
Printed: 6/19/2018 @ 7:54:48 AM By: jdouglas
File: N:\03\60\06634_2E\roadway\sheets\105322GB008.dgn

1. STA. 18+95.96, ℄ FULTON ST. = STA. 150+80.57, ℄ S. FRONT ST.
2. STA. 23+95.45, ℄ FULTON ST. = STA. 151+73.76, ℄ S. HIGH ST.
3. STA. 31+50.36, ℄ FULTON ST. = STA. 153+29.59, ℄ S. THIRD ST.
4. STA. 36+42.11, ℄ FULTON ST. = STA. 154+30.37, ℄ S. FOURTH ST.
5. STA. 60+80.70, ℄ EX. I-70 = STA. 149+94.46, ℄ S. FRONT ST.
6. STA. 65+88.75, ℄ EX. I-70 = STA. 150+12.21, ℄ S. HIGH ST.
7. STA. 73+43.39, ℄ EX. I-70 = STA. 151+65.70, ℄ S. THIRD ST.
8. STA. 78+35.01, ℄ EX. I-70 = STA. 152+66.50, ℄ S. FOURTH ST.
9. STA. 755+98.68, ℄ I-70 = STA. 80+87.84, 39.65' LT, EX. ℄ I-70
10. STA. 33+96.09 FULTON ST. = STA. 10+00.00 LAZELLE ST.
11. STA. 853+86.76 ℄ TRANS I-70 EB = STA. 78+77.19, 9.75' RT ℄ EX. I-70

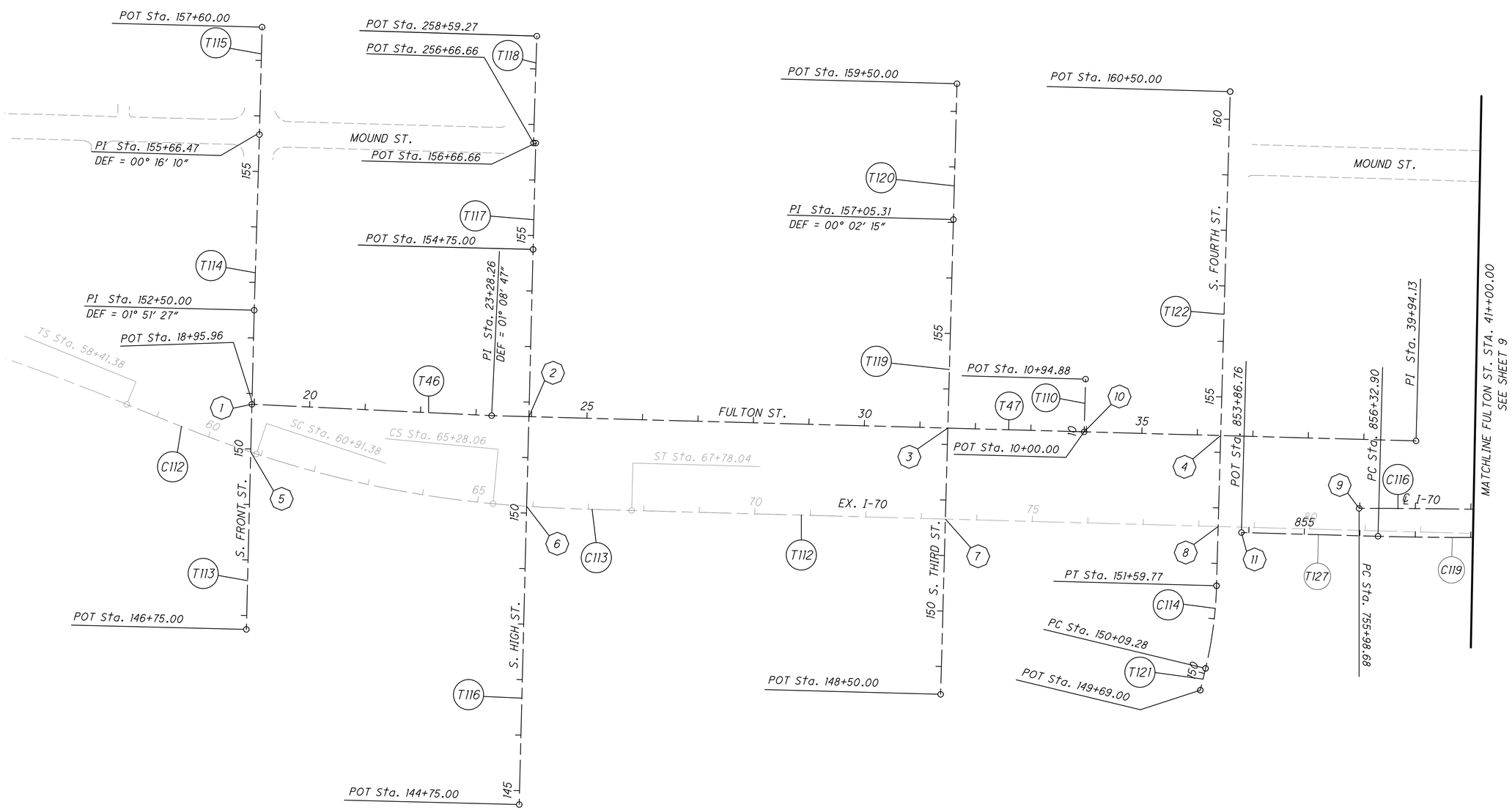

HORIZONTAL SCALE IN FEET
0 50 100 200

CALCULATED
CHECKED

GEOMETRIC PLAN
FULTON ST. STA. 18+95.79 TO 41+00.00

FRA-70-14.54

ms consultants, inc.

PLOT.CEL

ms consultants, inc.
msconsultants.com

www.msconsultants.com

Ohio DOT Workspace
70\71 East Interchange 2E

1"
0.5"
0

PDF: ohdot\V8i
PDF: 60-06634_2E_Columbus

Batchplot Spec: \\msconsultants.com\files\production\03\60\06634_2E\standards\plotdr\batchplt.spc
Pen Table: \\msconsultants.com\files\Standards\ustn\ohdot\V8\ms\plotting\pen\V8i_ms_std.tbl
Plot Driver: \\msconsultants.com\files\Standards\ustn\ohdot\v8\ms\plotting\PDF.pltcfg

Model: Sheet
Printed: 6/19/2018 @ 7:55:16 AM
File: N:\03\60\06634_2E\roadway\sheets\05322GB009.dgn

View: FENCE_VIEW1
By: jdouglas

34" x 22"

FULTON ST.

(T46)

STA. = 18+95.96
STA. = 23+28.26
L = 432.30'
BRG. = N 83°02'19" E

(T47)

STA. = 23+28.26
STA. = 39+94.13
L = 1,665.87'
BRG. = N 81°53'31" E

EXISTING I-70

(C112)

P.I. STA. 60+08.08
Ls = 250.00'
θ s = 3° 45' 00" (LT)
LT = 166.70'
ST = 83.37'
x = 249.89'
y = 5.45'
k = 124.98'
p = 1.36'
TS = 58+41.38
SC = 60+91.38

(C113)

P.I. STA. 66+11.42
Ls = 249.98'
θ s = 3° 44' 59" (LT)
LT = 166.69'
ST = 83.36'
x = 249.87'
y = 5.45'
k = 124.97'
p = 1.36'
CS = 65+28.06
ST = 67+78.04

(T112)

STA. = 67+78.04
STA. = 100+83.56
L = 3305.52'
BRG. = N 81°53'24" E

I-70

(C116)

P.I.Sta. 758+85.16
Δ = 2° 40' 24" (RT)
Dc = 0° 28' 00"
R = 12,277.67'
T = 286.48'
L = 572.86'
E = 3.34'
PC = 755+98.68
PT = 761+71.54
V (des) = 60 MPH
e (max) = NC
WIDENING = N/A

S FRONT ST.

(T113)

STA. = 146+75.00
STA. = 152+50.00
L = 575.00'
BRG. = N 8°15'38" W

(T114)

STA. = 152+50.00
STA. = 155+66.47
L = 316.47'
BRG. = N 7°58'46" W

(T115)

STA. = 155+66.47
STA. = 157+60.00
L = 193.53'
BRG. = N 8°14'56" W

S HIGH ST.

(T116)

STA. = 144+75.00
STA. = 154+75.00
L = 1,000.00'
BRG. = N 8°14'17" W

(T117)

STA. = 154+75.00
STA. = 156+66.66
L = 191.66'
BRG. = N 8°14'17" W

(T118)

STA. = 256+66.66
STA. = 258+59.27
L = 192.61'
BRG. = N 7°53'39" W

S THIRD ST.

(T119)

STA. = 148+50.00
STA. = 157+05.31
L = 855.31'
BRG. = N 8°07'52" W

(T120)

STA. = 157+05.31
STA. = 159+50.00
L = 244.69'
BRG. = N 8°10'07" W

S FOURTH ST.

(C114)

P.I.Sta. 150+84.80
Δ = 11° 57' 20" (LT)
Dc = 7° 56' 40"
R = 721.20'
T = 75.52'
L = 150.49'
E = 3.94'
PC = 150+09.28
PT = 151+59.77
V (des) = 35 MPH
e (max) = NC
WIDENING = N/A

(T121)

STA. = 149+69.00
STA. = 150+09.28
L = 40.28'
BRG. = N 3°52'07" E

(T122)

STA. = 151+59.77
STA. = 160+50.00
L = 890.23'
BRG. = N 8°05'13" W

LAZELLE ST.

(T110)

STA. = 10+00.00
STA. = 10+94.88
L = 94.88'
BRG. = N 8° 06' 29" W

TRANS 70 EB (WEST SIDE)

(T127)

STA. 853+86.76
STA. 856+32.90
L = 246.14'
BRG. = N 81° 53' 06" E

(C119)

P.I.= Sta. 857+48.14
Δ = 2° 18' 16" (LT)
Dc = 1° 00' 00"
R = 5,729.58'
T = 115.24'
L = 230.44'
E = 1.16'
PC = 856+32.90
PT = 858+63.34
V (des) = 55 MPH
e (max) = 0.023
WIDENING = N/A

CALCULATED MAH
CHECKED

ALIGNMENT DATA

FRA-70-14.54

ms consultants, inc.

PLOT.CEL

ms consultants, inc.
msconsultants.com

www.msconsultants.com

Ohio DOT Workspace
70\71 East Interchange 2E

1" 0.5" 0

Batchplot Spec: \\msconsultants.com\files\production\03\60\06634_2E\standards\plotdrv\batchplt.spc
Pen Table: \\msconsultants.com\files\Standards\usth\ohdot\V8i\ms\plotting\pen\V8i_ms_std.tbl PCF: ohdotV8i
Plot Driver: \\msconsultants.com\files\Standards\usth\ohdot\v8i\ms\plotting\PDF.pltcfg PCF: 60-06634_2E_Columbus

Model: Sheet View: FENCE_VIEW1
Printed: 6/19/2018 @ 7:55:18 AM By: jdouglas
File: N:\03\60\06634_2E\roadway\sheets\1053228010.dgn

34" x 22"

1. STA. 770+40.52, ℄ RAMP N4 =
   STA. 763+99.57, 52.00' RT ℄ I-70
2. STA. 960+99.32, ℄ TRANS RAMP N1 =
   STA. 760+99.32, 88.79' RT ℄ I-70
3. STA. 157+16.22, ℄ GRANT AVE. =
   STA. 867+34.23, ℄ RAMP N3
4. STA. 155+99.35, ℄ GRANT AVE. =
   STA. 768+11.54, ℄ I-70
5. STA. 773+40.85, ℄ RAMP N4. =
   STA. 766+99.84, 57.23' RT ℄ I-70
6. STA. 866+99.12, ℄ RAMP N1 =
   STA. 766+99.04, 117.54' RT ℄ I-70 =
   STA. 966+99.85, 1.29' RT ℄ TRANS RAMP N1
7. STA. 766+99.84, ℄ I-70 =
   STA. 91+88.84, 31.68' LT, EX. ℄ I-70
8. STA. 969+03.60, ℄ TRANS. I-71 SB (WEST SIDE) =
   STA. 769+03.60, 64.00' LT ℄ I-70
9. STA. 669+03.60, ℄ TRANS. I-70 WB (WEST SIDE) =
   STA. 769+03.60, 40.00' LT ℄ I-70

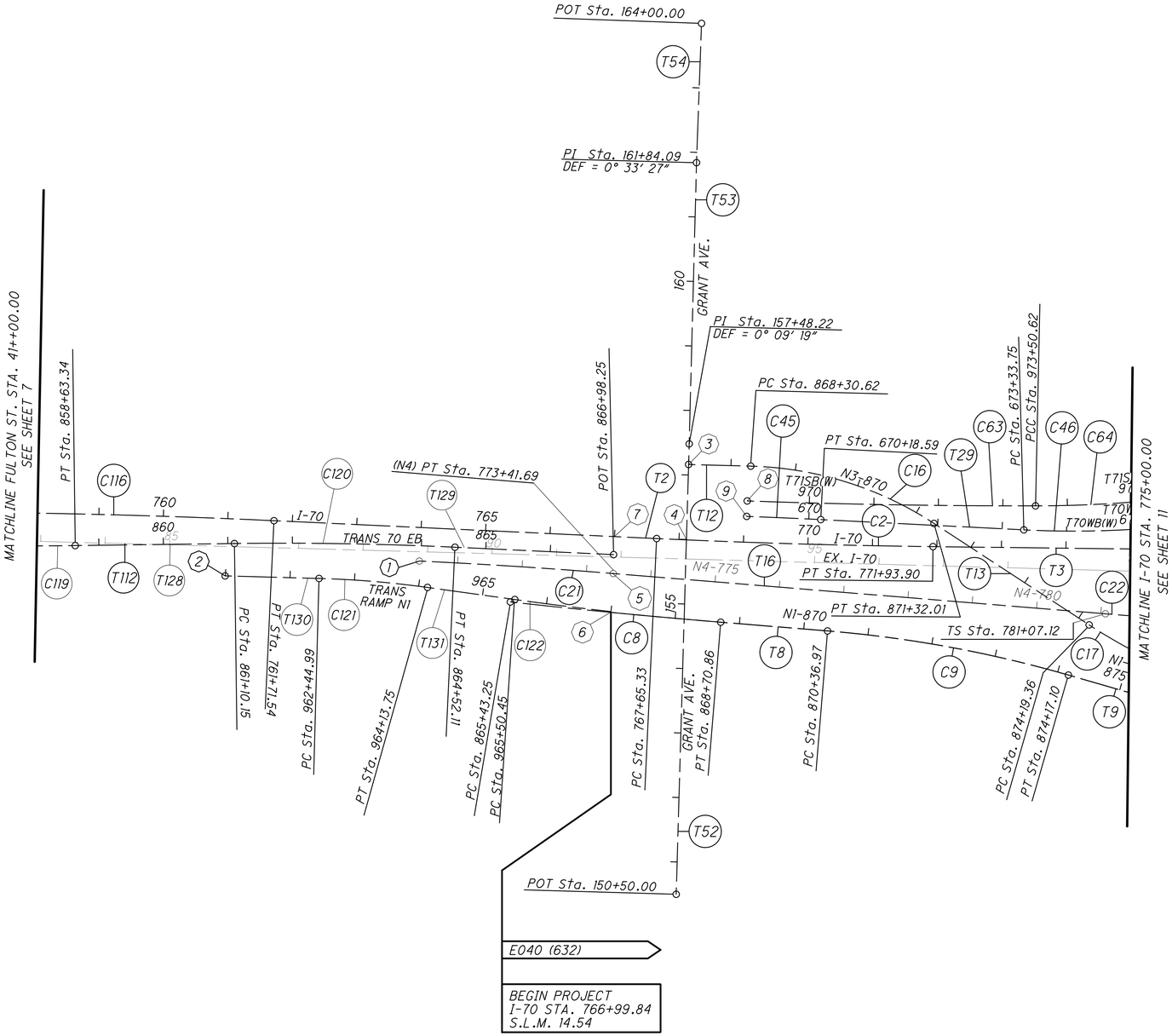

HORIZONTAL SCALE IN FEET
0 50 100 200

CALCULATED | CHECKED

GEOMETRIC PLAN
FULTON STA. 41+00.00 TO I-70 STA. 775+00.00

FRA-70-14.54

9
2317

ms consultants, inc.

PLOT.CEL

ms consultants, inc.
msconsultants.com

www.msconsultants.com

Ohio DOT Workspace
70\71 East Interchange 2E

1"
0.5"
0

PDF: ohdot\V8i
PDF: 60-06634_2E_Columbus

Batchplot Spec: \\msconsultants.com\files\production\03\60\06634_2E\standards\plotdir\batchplt.spc
Pen Table: \\msconsultants.com\files\Standards\astm\ohdot\V8i\ms\plotting\pen\V8i_ms_std.tbl
Plot Driver: \\msconsultants.com\files\Standards\astm\ohdot\V8i\ms\plotting\PDF.pltcfg

Model: Sheet
Printed: 6/19/2018 @ 7:55:20 AM
File: N:\03\60\06634_2E\roadway\sheets\0653220801.dgn

View: FENCE_VIEW1
By: jbougios

34" x 22"

TRANS 71 SB (WEST SIDE)

C63

P.I.Sta. 971+27.14
Δ = 2° 05′ 49″ (LT)
Dc = 0° 28′ 09″
R = 12,213.67′
T = 223.54′
L = 447.02′
E = 2.05′
PC = 969+03.60
PCC = 973+50.62
V (des) = 55 MPH
e (max) = NC
WIDENING = N/A

C64

P.I.Sta. 976+45.61
Δ = 16° 52′ 52″ (LT)
Dc = 2° 52′ 56″
R = 1,987.93′
T = 294.99′
L = 585.71′
E = 21.77′
PCC = 973+50.62
CS = 979+36.33
V (des) = 55 MPH
e (max) = 0.0488
WIDENING = N/A

TRANS 70 WB (WEST SIDE)

C45

P.I.Sta. 669+61.10
Δ = 0° 51′ 45″ (RT)
Dc = 0° 45′ 00″
R = 7,639.44′
T = 57.50′
L = 114.99′
E = 0.22′
PC = 669+03.60
PT = 670+18.59
V (des) = 50 MPH
e (max) = NC
WIDENING = N/A

T29

Sta. = 670+18.59
L = 315.17′
BRG. N 83° 13′ 02″ E
Sta. = 673+33.75

C46

P.I.Sta. 676+00.11
Δ = 19° 46′ 40″ (LT)
Dc = 3° 45′ 00″
R = 1,527.89′
T = 266.35′
L = 527.41′
E = 23.04′
PC = 673+33.75
PT = 678+61.16
V (des) = 50
e (max) = 0.050
WIDENING = N/A

I-70

C116

P.I.Sta. 758+85.16
Δ = 2° 40′ 24″ (RT)
Dc = 0° 28′ 00″
R = 12,277.67′
T = 286.48′
L = 572.86′
E = 3.34′
PC = 755+98.68
PT = 761+71.54
V (des) = 60 MPH
e (max) = NC
WIDENING = N/A

T2

STA. = 761+71.54
STA. = 767+65.33
L = 593.79′
BRG. = N 83°00′00″ E

C2

P.I. STA. 769+79.64
Δ = 2° 00′ 00″ (LT)
Dc = 0° 28′ 00″
R = 12,277.67′
T = 214.31′
L = 428.57′
E = 1.87′
PC = 767+65.33
PT = 771+93.90
V (des) = 60 MPH
e (max) = NC
WIDENING = N/A

T3

STA. = 771+93.90
STA. = 782+12.25
L = 1,018.34′
BRG. = N 81°00′00″ E

RAMP N1

C8

P.I. STA. 867+07.06
Δ = 1° 38′ 17″ (LT)
Dc = 0° 30′ 00″
R = 11,459.16′
T = 163.82′
L = 327.61′
E = 1.17′
PC = 865+43.25
PT = 868+70.86
V (des) = 50 MPH
e (max) = NC
WIDENING = N/A

T8

STA. = 868+70.86
STA. = 870+36.97
L = 166.12′
BRG. = N 85°00′08″ E

C9

P.I. STA. 872+27.67
Δ = 11° 24′ 14″ (RT)
Dc = 3° 00′ 00″
R = 1,909.86′
T = 190.70′
L = 380.13′
E = 9.50′
PC = 870+36.97
PT = 874+17.10
V (des) = 50 MPH
e (max) = 0.045
WIDENING = N/A

T9

STA. = 874+17.10
STA. = 876+82.16
L = 265.05′
BRG. = S 83°35′38″ E

RAMP N3

T12

STA. = 867+34.23
STA. = 868+30.62
L = 96.39′
BRG. = N 81°51′16″ E

C16

P.I. STA. 869+85.26
Δ = 31° 38′ 44″ (RT)
Dc = 10° 30′ 00″
R = 545.67′
T = 154.64′
L = 301.39′
E = 21.49′
PC = 868+30.62
PT = 871+32.01
V (des) = 30 MPH
e (max) = 0.016
WIDENING = 3.0′

T13

STA. = 871+32.01
STA. = 874+19.36
L = 287.35′
BRG. = S 66°30′00″ E

C17

P.I. STA. 877+94.90
Δ = 47° 43′ 52″ (LT)
Dc = 6° 45′ 00″
R = 848.83′
T = 375.54′
L = 707.13′
E = 79.36′
PC = 874+19.36
PT = 881+26.49
V (des) = 40 MPH
e (max) = 0.052
WIDENING = 3′

RAMP N4

C21

P.I. STA. 771+91.12
Δ = 2° 00′ 08″ (RT)
Dc = 0° 39′ 53″
R = 8,618.37′
T = 150.60′
L = 301.17′
E = 1.32′
PC = 770+40.52
PT = 773+41.69
V (des) = 60 MPH
e (max) = 0.019
WIDENING = N/A

T16

STA. = 773+41.69
STA. = 781+07.12
L = 765.43′
BRG. = N 85°00′08″ E

C22

P.I. STA. 783+40.70
Ls = 350.00′
θs = 8° 10′ 00″
LT = 233.58′
ST = 116.89′
x = 349.29′
y = 16.60′
k = 174.88′
p = 4.15′
TS = 781+07.12
SC = 784+57.12

GRANT AVE.

T52

STA. = 150+50.00
STA. = 157+48.22
L = 698.22′
BRG. = N 8°01′16″ W

T53

STA. = 157+48.22
STA. = 161+84.09
L = 435.87′
BRG. = N 8°10′35″ W

T54

STA. = 161+84.09
STA. = 164+00.00
L = 215.91′
BRG. = N 7°37′08″ W

TRANS 70 EB (WEST SIDE)

C119

P.I.= Sta. 857+48.14
Δ = 2° 18′ 16″ (LT)
Dc = 1° 00′ 00″
R = 5,729.58′
T = 115.24′
L = 230.44′
E = 1.16′
PC = 856+32.90
PT = 858+63.34
V (des) = 55 MPH
e (max) = 0.023
WIDENING = N/A

T128

STA. 858+63.34
STA. 861+10.15
L = 246.81′
BRG. = N 79° 34′ 50″ E

C120

P.I.= Sta. 862+81.18
Δ = 3° 25′ 10″ (RT)
Dc = 1° 00′ 00″
R = 5,729.58′
T = 171.03′
L = 341.96′
E = 2.55′
PC = 861+10.15
PT = 864+52.11
V (des) = 55 MPH
e (max) = 0.023
WIDENING = N/A

T129

STA. 864+52.11
STA. 866+98.25
L = 246.14′
BRG. = N83° 00′ 00″ E

TRANS RAMP N1

T130

STA. 960+99.32
STA. 962+44.99
L = 145.68′
BRG. = N 81° 53′ 06″ E

C121

P.I.= Sta. 963+29.46
Δ = 6° 19′ 42″ (RT)
Dc = 3° 45′ 00″
R = 1,527.89′
T = 84.47′
L = 168.76′
E = 2.33′
PC = 962+44.99
PT = 964+13.75
V (des) = 55 MPH
e (max) = 0.056
WIDENING = N/A

T131

STA. 964+13.75
STA. 965+50.45
L = 136.70′
BRG. = N 88° 12′ 48″ E

C122

P.I.= Sta. 967+11.05
Δ = 3° 12′ 40″ (LT)
Dc = 1° 00′ 00″
R = 5,729.58′
T = 160.60′
L = 321.11′
E = 2.25′
PC = 965+50.45
PT = 968+71.56
V (des) = 50 MPH
e (max) = 0.020
WIDENING = N/A

EX. I-70

T112

STA. = 67+78.04
STA. = 100+83.56
L = 3305.52′
BRG. = N 81°53′24″ E

CALCULATED MAH CHECKED

ALIGNMENT DATA

FRA-70-14.54

ms consultants, inc.

PLOT.CEL

ms consultants, inc.
msconsultants.com

www.msconsultants.com

Ohio DOT Workspace
70\71 East Interchange 2E

PDF: ohdot\V8i
PLOT: 60-06634_2E_Columbus

0 0.5" 1"

34" x 22"

Batchplot Spec: \\msconsultants.com\files\production\03\60\06634_2E\standards\ohdot\v8i\batchplt.SPC
Pen Table: \\msconsultants.com\files\Standards\astm\ohdot\V8i\ms\plotting\pen\V8i_ms_std.tbl
Plot Driver: \\msconsultants.com\files\Standards\astm\ohdot\v8i\ms\plotting\PDF.pltcfg

Model: Sheet
Printed: 6/19/2018 @ 7:55:25 AM
File: N:\03\60\06634_2E\roadway\sheets\065220801 2.dgn
View: SHEET
By: jbougias

1. STA. 782+53.06, ℄ RAMP N2 = STA. 875+09.18, 36.00' LT ℄ RAMP N3
2. STA. 887+83.37, ℄ MOOBERRY = STA. 183+16.67, ℄ PARSONS AVE.
3. STA. 888+03.31, ℄ RAMP N1 = STA. 183+07.14, ℄ PARSONS AVE.
4. STA. 892+35.21, ℄ MOOBERRY ST. = STA. 692+27.59, ℄ AMBULANCE DR.
5. STA. 895+21.23, ℄ RAMP N3 = STA. 795+21.22, 64.00' RT ℄ I-70
6. STA. 890+24.82, ℄ MOOBERRY ST. = STA. 592+15.79, ℄ CHILDRENS DR.
7. STA. 682+87.97, ℄ TRANS I-70 WB (WEST SIDE) = STA. 982+53.15, 94.90' RT ℄ TRANS I-71 SB (WEST SIDE)
8. STA. 694+18.27, ℄ TRANS RAMP N4 = STA. 985+76.77, 203.79' RT ℄ TRANS I-71 SB (WEST SIDE)
9. STA. 687+95.55, ℄ TRANS RAMP N4 = STA. 787+95.55, 3.75' LT ℄ RAMP N4
10. STA. 84+68.51, ℄ TRANS PARSONS = STA. 184+68.51, 11.00' LT ℄ PARSONS AVE. = STA. 47+66.50, 23.77' LT ℄ EX. PARSONS AVE.
11. STA. 791+77.25 ℄ TRANS RAMP P2 (CENTRAL) = STA. 891+77.25, 4.00' LT ℄ RAMP P2
12. STA. 214+56.80 ℄ TRANS I-71 SB (EAST SIDE) = STA. 889+79.94, 209.26' LT ℄ RAMP Q3
13. STA. 217+58.34 ℄ TRANS I-70 WB (EAST SIDE) = STA. 215+91.70, 66.30' LT ℄ TRANS I-71 SB (EAST SIDE)
14. STA. 187+55.78 ℄ PARSONS AVE = STA. 50+11.43, 28.17' RT ℄ EX. PARSONS
15. STA. 44+64.00 ℄ EX. PARSONS = STA. 181+66.06, 13.48' RT ℄ PARSONS AVE
16. STA. 50+11.56 ℄ EX. PARSONS = STA. 87+15.27 ℄ TRANS PARSONS AVE

POT Sta. 58+99.12
EX. PARSONS AVE.
ST Sta. 991+16.21
CS Sta. 989+56.21
T71SB (W) 990
SC Sta. 881+30.15
CS Sta. 799+43.39
POT Sta. 877+48.90
P2-880
P2-885
PC Sta. 880+16.84
PT Sta. 795+75.53
T71SB(W) 985
N4-795
Q3-885
POT Sta. 87+15.27
PT Sta. 886+81.98
PC Sta. 890+01.32
P2-890
POT Sta. 792+62.96
PC Sta. 794+19.57
PC Sta. 795+71.12
T71 NB 795
PC Sta. 223+57.27
TRANS P2 (CENT.)
TRANS 71 NB
PT Sta. 793+48.12
PT Sta. 219+95.68
CS Sta. 219+15.52
ST Sta. 220+69.52
T71 SB (E) 220
T70 WB (E) 295
TP2 800
PC Sta. 799+18.32
ST Sta. 898+00.81
CS Sta. 894+90.81
MOOBERRY ST
PC Sta. 898+80.74
PC Sta. 898+64.39
MATCHLINE STA. 800+00.00 SEE SHEET 14
PC Sta. 893+24.66
POT Sta. 692+27.59
POT Sta. 690+79.81
PT Sta. 895+51.79
AMBULANCE DR
PT Sta. 891+26.78
POT Sta. 592+15.79
PT Sta. 591+01.28
PC Sta. 590+26.59
PT Sta. 590+00.12
PC Sta. 589+25.84
CHILDRENS DR
PC Sta. 889+12.29
PT Sta. 887+02.41
POT Sta. 44+64.00
180 PARSONS AVE.
POT Sta. 179+38.84
PC Sta. 884+12.85
PT Sta. 881+53.50
PC Sta. 876+82.16
SC Sta. 980+96.33
PT Sta. 691+91.16
SC Sta. 979+96.33
PT Sta. 678+19.16
PC Sta. 692+65.16
PT Sta. 691+91.16
PCC Sta. 792+65.68
PRC Sta. 85+78.78
PC Sta. 184+68.5
PT Sta. 793+37.25
SC Sta. 888+73.78
N3-890
PT Sta. 893+50.04
PC Sta. 782+12.25
PC Sta. 680+16.35
PT Sta. 100+83.56
T71SB(W) 980
T70WB(W) 680
TN4 690
N4-790
N2-790
PC Sta. 884+28.83
CS Sta. 886+73.78
PCC Sta. 789+03.89
SC Sta. 784+57.12
N4-785
PCC Sta. 785+61.29
PT Sta. 881+26.49
N2-785
N3-880
N1-880
N3-885
N1-885
Q3-890
N3-895
Q3-895
MATCHLINE STA. 775+00.00 SEE SHEET 9
I-70
55
45
50
T1 T2 T3 T4 T10 T11 T13 T14 T15 T21 T22 T25 T27 T28 T30 T31 T32 T35 T39 T41 T48 T59 T60 T61 T66 T87 T112
C3 C4 C10 C11 C12 C13 C14 C15 C17 C18 C19 C20 C22 C23 C26 C28 C29 C31 C32 C33 C34 C39 C40 C46 C47 C48 C49 C53 C54 C59 C60 C61 C64 C65 C66 C72 C73 C74 C76 C84 C85 C86

CALCULATED | CHECKED

0 50 100 200 HORIZONTAL SCALE IN FEET

GEOMETRIC PLAN
I-70 STA. 775+00.00 TO 800+00.00
FRA-70-14.54

11
2317

ms consultants, inc.

PLOT.CEL

ms consultants, inc.
msconsultants.com

Ohio DOT Workspace
70\71 East Interchange 2E
www.msconsultants.com

1"
0.5"
0

Batchplot Spec: \\msconsultants.com\Files\Production\03\60\06634_2E\standards\plotdrv\batchplt.spc
Pen Table: \\msconsultants.com\Files\Standards\astm\ohdot\V8i\ms\plotting\pen\V8i_ms_std.tbl
Plot Driver: \\msconsultants.com\Files\Standards\astm\ohdot\V8i\ms\plotting\PDF.pltcfg
PDF: ohdot(V8i
PCF: 60-06634_2E_Columbus

34" x 22"

Model: Sheet
Printed: 6/19/2018 @ 7:55:27 AM
File: N:\03\60\06634_2E\roadway\sheets\1053226013.dgn
View: FENCE_VIEW1
By: jdouglas

EX. I-70

(T112)

STA. = 67+78.04
STA. = 100+83.56
L = 3305.52'
BRG. = N 81°53'24" E

I-70

(T3)

STA. = 771+93.90
STA. = 782+12.25
L = 1,018.34'
BRG. = N 81°00'00" E

(C3)

P.I. STA. 787+78.67
Δ = 16° 30' 00" (RT)
Dc = 1° 28' 00"
R = 3,906.53'
T = 566.42'
L = 1,125.00'
E = 40.85'
PC = 782+12.25
PT = 793+37.25
V (des) = 60 MPH
e (max) = 0.037
WIDENING = N/A

(T4)

STA. = 793+37.25
STA. = 799+18.32
L = 581.07'
BRG. = S 82°30'00" E

(C4)

P.I. STA. 801+19.01
Δ = 2° 00' 24" (RT)
Dc = 0° 30' 00"
R = 11,459.16'
T = 200.69'
L = 401.33'
E = 1.76'
PC = 799+18.32
PT = 803+19.65
V (des) = 60 MPH
e (max) = NC
WIDENING = N/A

RAMP N1

(T9)

STA. = 874+17.10
STA. = 876+82.16
L = 265.05'
BRG. = S 83°35'38" E

(C10)

P.I. STA. 879+23.61
Δ = 30° 38' 14" (LT)
Dc = 6° 30' 00"
R = 881.47'
T = 241.45'
L = 471.34'
E = 32.47'
PC = 876+82.16
PT = 881+53.50
V (des) = 45 MPH
e (max) = 0.057
WIDENING = N/A

(T10)

STA. = 881+53.50
STA. = 884+12.85
L = 259.35'
BRG. = N 65°46'08" E

(C11)

P.I. STA. 885+59.63
Δ = 23° 09' 52" (RT)
Dc = 8° 00' 00"
R = 716.20'
T = 146.78'
L = 289.56'
E = 14.89'
PC = 884+12.85
PT = 887+02.41
V (des) = 30 MPH
e (max) = 0.041
WIDENING = 5.25'

(T11)

STA. = 887+02.41
STA. = 888+03.31
L = 100.90'
BRG. = N 88°56'00" E

RAMP N2

(C12)

P.I. STA. 784+11.62
Δ = 33° 08' 08" (LT)
Dc = 10° 45' 00"
R = 532.98'
T = 158.56'
L = 308.24'
E = 23.09'
PC = 782+53.06
PCC = 785+61.29
V (des) = 40 MPH
e (max) = 0.060
WIDENING = N/A

(C13)

P.I. STA. 787+34.15
Δ = 18° 50' 34" (LT)
Dc = 5° 30' 00"
R = 1,041.74'
T = 172.86'
L = 342.60'
E = 14.24'
PCC = 785+61.29
PCC = 789+03.89
V (des) = 45 MPH
e (max) = 0.053
WIDENING = N/A

(C14)

P.I. STA. 790+85.43
Δ = 11° 50' 42" (LT)
Dc = 3° 16' 27"
R = 1,750.00'
T = 181.54'
L = 361.79'
E = 9.39'
PCC = 789+03.89
PCC = 792+65.68
V (des) = 50 MPH
e (max) = 0.047
WIDENING = N/A

(C15)

P.I. STA. 794+21.40
Δ = 14° 11' 30" (LT)
Dc = 4° 34' 49"
R = 1,250.94'
T = 155.72'
L = 309.85'
E = 9.66'
PCC = 792+65.68
PT = 795+75.53
V (des) = 50 MPH
e (max) = 0.059
WIDENING = N/A

RAMP N3

(C17)

P.I. STA. 877+94.90
Δ = 47° 43' 52" (LT)
Dc = 6° 45' 00"
R = 848.83'
T = 375.54'
L = 707.13'
E = 79.36'
PC = 874+19.36
PT = 881+26.49
V (des) = 40 MPH
e (max) = 0.052
WIDENING = 3'

(T14)

STA. = 881+26.49
STA. = 884+28.83
L = 302.35'
BRG. = N 65°46'08" E

(C18)

P.I. STA. 885+52.10
Δ = 15° 55' 18" (RT)
Dc = 6° 30' 00"
R = 881.47'
T = 123.27'
L = 244.95'
E = 8.58'
PC = 884+28.83
CS = 886+73.78
V (des) = 45 MPH
e (max) = 0.057
WIDENING = N/A

(C19)

P.I. STA. 887+52.52
Ls = 200.00'
θs = 7° 55' 00"
LT = 121.56'
ST = 78.74'
x = 199.54'
y = 10.84'
k = 99.94'
p = 1.48'
CS = 886+73.78
SC = 888+73.78

(C20)

P.I. STA. 891+12.19
Δ = 6° 44' 49" (RT)
Dc = 1° 25' 00"
R = 4,044.41'
T = 238.40'
L = 476.25'
E = 7.02'
SC = 888+73.78
PT = 893+50.04
V (des) = 60 MPH
e (max) = 0.035
WIDENING = N/A

(T15)

STA. = 893+50.04
STA. = 895+21.23
L = 171.19'
BRG. = S 83°38'45" E

RAMP N4

(C22)

P.I. STA. 783+40.70
Ls = 350.00'
θs = 8° 10' 00"
LT = 233.58'
ST = 116.89'
x = 349.29'
y = 16.60'
k = 174.88'
p = 4.15'
TS = 781+07.12
SC = 784+57.12

(C23)

P.I. STA. 793+06.62
Δ = 69° 21' 33" (LT)
Dc = 4° 40' 00"
R = 1,227.77'
T = 849.50'
L = 1,486.27'
E = 265.24'
SC = 784+57.12
CS = 799+43.39
V (des) = 55 MPH
e (max) = 0.059
WIDENING = 3.75'
SSD = 426'
(NDC = 495')

EX. RAMP P2

(T21)

STA. = 877+48.90
STA. = 880+16.84
L = 267.95'
BRG. = N 81°50'09" E

(C28)

P.I.= Sta. 883+55.52
Δ = 26° 36' 20" (RT)
Dc = 4° 00' 00"
R = 1,432.39'
T = 338.68'
L = 665.14'
E = 39.49'
PC = 880+16.84
PT = 886+81.98
V (des) = 40 MPH
e (max) = 0.040
WIDENING = N/A

(T22)

STA. = 886+81.98
STA. = 890+01.32
L = 319.34'
BRG. = S 71°33'31" E

(C29)

P.I.= Sta. 891+38.00
Δ = 9° 32' 43" (RT)
Dc = 3° 30' 00"
R = 1,637.02'
T = 136.68'
L = 272.72'
E = 5.70'
PC = 890+01.32
PT = 892+74.04
V (des) = 45 MPH
e (max) = 0.043
WIDENING = N/A

TRANS 71 SB (WEST SIDE)

(C64)

P.I.Sta. 976+45.61
Δ = 16° 52' 52" (LT)
Dc = 2° 52' 56"
R = 1,987.93'
T = 294.99'
L = 585.71'
E = 21.77'
PCC = 973+50.62
CS = 979+36.33
V (des) = 55 MPH
e (max) = 0.0488
WIDENING = N/A

(C65)

P.I. STA. 980+43.03
Ls = 160.00'
fs = 4° 24' 00"
LT = 106.70'
ST = 53.36'
x = 159.91'
y = 4.09'
k = 79.98'
p = 1.02'
CS = 979+36.33
SC = 980+96.33

(C66)

P.I.Sta. 985+52.46
Δ = 47° 17' 36" (LT)
Dc = 5° 30' 00"
R = 1,041.74'
T = 456.14'
L = 859.88'
E = 95.49'
SC = 980+96.33
CS = 989+56.21
V (des) = 55 MPH
e (max) = 0.060
WIDENING = 2.75'

(C67)

P.I. STA. 990+09.57
Ls = 160.00'
fs = 4° 24' 00"
LT = 106.70'
ST = 53.36'
x = 159.91'
y = 4.09'
k = 79.98'
p = 1.02'
CS = 989+56.21
ST = 991+16.21

(T31)

STA. = 991+16.21
STA. = 999+55.41
L = 839.21'
BRG. = N 7° 17' 00" E

TRANS 70 WB (WEST SIDE)

(C46)

P.I.Sta. 676+00.11
Δ = 19° 46' 40" (LT)
Dc = 3° 45' 00"
R = 1,527.89'
T = 266.35'
L = 527.41'
E = 23.04'
PC = 673+33.75
PT = 678+61.16
V (des) = 50 MPH
e (max) = 0.050
WIDENING = N/A

(T30)

STA. = 678+61.16
STA. = 680+16.35
L = 155.19'
BRG. = N 63° 26' 22" E

(C47)

P.I.Sta. 681+52.68
Δ = 12° 13' 23" (RT)
Dc = 4° 30' 00"
R = 1,273.24'
T = 136.33'
L = 271.62'
E = 7.28'
PC = 680+16.35
PT = 682+87.97
V (des) = 50
e (max) = 0.0540
WIDENING = 2.25'

ALIGNMENT DATA

CALCULATED | CHECKED

FRA-70-14.54

12
2317

PLOT.CEL
ms consultants, inc.
msconsultants.com
www.msconsultants.com
Ohio DOT Workspace
70\71 East Interchange 2E
PDF: ohdot\Bi
PDF: 60-06634_2E_Columbus
Batchplot Spec: \\msconsultants.com\Files\production\03\60\06634_2E\standards\plotdrv\batchplt.spc
Pen Table: \\msconsultants.com\Files\Standards\astm\ohdot\V8i\ms\plotting\pen\V8i_ms_std.tbl
Plot Driver: \\msconsultants.com\Files\Standards\astm\ohdot\v8i\ms\plotting\PDF.pltcfg
Model: Sheet
Printed: 6/19/2018 @ 7:55:28 AM
File: N:\03\60\06634_2E\roadway\sheets\1053220804.dgn
View: FENCE_VIEW1
By: jdoughas
1" 0.5" 0
34" x 22"

RAMP Q3

(C59)

P.I. STA. 889+27.07
Δ = 74° 49′ 02″ (LT)
Dc = 5° 29′ 55″
R = 1,042.00′
T = 796.92′
L = 1,360.65′
E = 269.81′
SC = 881+30.15
CS = 894+90.81
V (des) = 55 MPH
e (max) = 0.060
WIDENING = 4.5′

(C60)

P.I. STA. 895+94.36
Ls = 310.00′
θ s = 8° 31′ 22″
LT = 206.91′
ST = 103.55′
x = 309.31′
y = 15.35′
k = 154.89′
p = 3.84′
CS = 894+90.81
ST = 898+00.81

(T35)

STA. = 898+00.81
STA. = 898+80.74
L = 79.93′
BRG. = S 87°32′05″ E

(C61)

P.I. STA. 901+34.72
Δ = 5° 04′ 34″ (RT)
Dc = 1° 00′ 00″
R = 5,729.58′
T = 253.98′
L = 507.62′
E = 5.63′
PC = 898+80.74
PT = 903+88.36
V (des) = 55 MPH
e (max) = 0.023
WIDENING = N/A

EX. I-70

(T112)

STA. = 67+78.04
STA. = 100+83.56
L = 3305.52′
BRG. = N 81°53′24″ E

AMBULANCE DR.

(T49A)

STA. = 692+27.59
STA. = 690+79.81
L = 147.78
BRG. = N 3°43′06″ E

CHILDREN'S DRIVE

(C84)

P.I.= Sta. 589+63.13
Δ = 12° 39′ 30″ (RT)
Dc = 17° 02′ 36″
R = 336.18′
T = 37.29′
L = 74.27′
E = 2.06′
PC = 589+25.84
PT = 590+00.12
V (des) = 20 MPH
e (max) = N.C.
WIDENING = N/A

(T86)

STA. = 590+00.12
STA. = 590+26.59
L = 26.48
BRG. = N 36°38′32″ E

(C85)

P.I.= Sta. 590+65.19
Δ = 35° 39′ 37″ (LT)
Dc = 47° 44′ 47″
R = 120.00′
T = 38.60′
L = 74.69′
E = 6.05′
PC =590+26.59
PT = 591+01.28
V (des) = 20 MPH
e (max) = N.C.
WIDENING = N/A

(T87)

STA. = 591+01.28
STA. = 592+15.79
L = 114.51
BRG. = N 0°58′55″ E

MOOBERRY ST.

(T59)

STA. = 887+83.37
STA. = 889+12.29
L = 128.92′
BRG. = N 88°56′00″ E

(C72)

P.I. STA. 890+20.34
Δ = 17° 09′ 34″ (RT)
Dc = 8° 00′ 00″
R = 716.20′
T = 108.06′
L = 214.49′
E = 8.11′
PC = 889+12.29
PT = 891+26.78
V (des) = 30 MPH
e (max) = NC
WIDENING = N/A

(T60)

STA. = 891+26.78
STA. = 893+24.66
L = 197.88′
BRG. = S 73°54′26″ E

(C73)

P.I. STA. 894+38.76
Δ = 13° 37′ 39″ (LT)
Dc = 6° 00′ 00″
R = 954.93′
T = 114.10′
L = 227.13′
E = 6.79′
PC = 893+24.66
PT = 895+51.79
V (des) = 30 MPH
e (max) = NC
WIDENING = N/A

(T61)

STA. = 895+51.79
STA. = 898+64.39
L = 312.60′
BRG. = S 87°32′05″ E

(C74)

P.I. STA. 899+59.41
Δ = 1° 55′ 19″ (RT)
Dc = 1° 00′ 41″
R = 5,664.91′
T = 95.02′
L = 190.03′
E = 0.80′
PC = 898+64.39
PCC = 900+54.42
V (des) = 30 MPH
e (max) = NC
WIDENING = N/A

PARSONS AVE.

(T66)

STA. = 179+38.84
STA. = 184+68.51
L = 529.67′
BRG. = N 3°27′30″ E

(C76)

P.I.= Sta. 185+94.36
Δ = 18° 42′ 34″ (RT)
Dc = 7° 30′ 00″
R = 763.94′
T = 125.85′
L = 249.46′
E = 10.30′
PC = 184+68.51
PT = 187+17.96
V (des) = 40 MPH
e (max) = NC
WIDENING = N/A

TRANS PARSONS AVE.

(C31)

P.I.Sta. 85+23.85
Δ = 12° 07′ 47″ (RT)
Dc = 11° 00′ 00″
R = 520.87′
T = 55.34′
L = 110.27′
E = 2.93′
PC = 84+68.51
PRC = 85+78.78
V (des) = 35 MPH
e (max) = NC
WIDENING = N/A

(C32)

P.I.Sta. 86+34.74
Δ = 12° 15′ 50″ (LT)
Dc = 11° 00′ 00″
R = 520.87′
T = 55.96′
L = 111.49′
E = 3.00′
PRC = 85+78.78
PT = 86+90.27
V (des) = 35 MPH
e (max) = NC
WIDENING = N/A

(T28)

STA. = 86+90.27
STA. = 87+15.27
L = 25.00′
BRG. = N 3° 19′ 28″ E

EX. PARSONS

(T27)

STA. = 44+64.00
STA. = 58+99.12
L = 1,435.12′
BRG. = N 3° 19′ 28″ E

TRANS N4

(C48)

P.I.Sta. 689+59.74
Δ = 23° 53′ 44″ (LT)
Dc = 7° 23′ 02″
R = 775.94′
T = 164.19′
L = 323.61′
E = 17.18′
PC = 687+95.55
PT = 691+19.16
V (des) = 45 MPH
e (max) = 0.059
WIDENING = N/A

(T25)

STA. = 691+19.16
STA. = 692+65.20
L = 146.04′
BRG. = N 37° 08′ 48″ E

(C49)

P.I.Sta. 693+41.87
Δ = 8° 25′ 09″ (LT)
Dc = 5° 30′ 00″
R = 1,041.74′
T = 76.68′
L = 153.08′
E = 2.82′
PC = 692+65.20
PT = 694+18.27
V (des) = 45 MPH
e (max) = 0.070 (MATCH EX.)
WIDENING = N/A

TRANS I-71 NB

(T41)

STA. = 792+62.96
STA. = 795+71.12
L = 308.16′
BRG. = S 62° 00′ 48″ E

(C26)

P.I.Sta. 798+00.05
Δ = 14° 54′ 21″ (LT)
Dc = 3° 16′ 27″
R = 1,750.00′
T = 228.93′
L = 455.27′
E = 14.91′
PT = 800+26.39
PC = 795+71.12
V (des) = 55 MPH
e (max) = 0.0522
WIDENING = N/A

TRANS P2 (CENTRAL)

(C53)

P.I.Sta. 792+62.84
Δ = 8° 32′ 37″ (RT)
Dc = 5° 00′ 00″
R = 1,145.92′
T = 85.60′
L = 170.87′
E = 3.19′
PC = 791+77.25
PT = 793+48.12
V (des) = 45 MPH
e (max) = 0.0510
WIDENING = N/A

(T39)

STA. = 793+48.12
STA. = 794+19.57
L = 71.45′
BRG. = S 56° 51′ 27″ E

(C54)

P.I.Sta. 797+44.12
Δ = 22° 35′ 40″ (LT)
Dc = 3° 31′ 36″
R = 1,624.58′
T = 324.54′
L = 640.65′
E = 32.10′
PC = 794+19.57
PT = 800+60.22
V (des) = 50 MPH
e (max) = 0.0482
WIDENING = N/A

TRANS I-70 WB (EAST SIDE)

(C33)

P.I.Sta. 218+77.22
Δ = 8° 18′ 26″ (RT)
Dc = 3° 30′ 00″
R = 1,637.02′
T = 118.88′
L = 237.35′
E = 4.31′
PC = 217+58.34
PT = 219+95.68
V (des) = 60 MPH
e (max) = 0.0580 (MATCH EX.)
WIDENING = N/A

(C34)

P.I.Sta. 224+92.29
Δ = 8° 05′ 16″ (LT)
Dc = 3° 00′ 00″
R = 1,909.86′
T = 135.02′
L = 269.59′
E = 4.77′
PC = 223+57.27
PT = 226+26.86
V (des) = 55 MPH
e (max) = 0.050
WIDENING = N/A

(T32)

STA. = 219+95.68
STA. = 223+57.27
L = 361.59′
BRG. = S 71° 21′ 51″ E

TRANS I-71 SB (EAST SIDE)

(C39)

P.I.Sta. 216+89.94
Δ = 25° 13′ 47″ (LT)
Dc = 5° 30′ 00″
R = 1,041.74′
T = 233.14′
L = 458.72′
E = 25.77′
PC = 214+56.80
CS = 219+15.52
V (des) = 55 MPH
e (max) = 0.060′
WIDENING = 2.77′

(C40)

P.I. STA. 219+66.88
Ls = 154.00′
f s = 4° 14′ 06″
LT = 102.70′
ST = 51.36′
x = 153.92′
y = 3.79′
k = 76.99′
p = 0.95′
CS = 219+15.52
ST = 220+69.52

(T84)

STA. = 220+69.52
STA. = 227+29.37
L = 659.85′
BRG. = S 80° 12′ 22″ E

ALIGNMENT DATA

CALCULATED | CHECKED

FRA-70-14.54

13
2317

ms consultants, inc.

PLOT.CEL

ms consultants, inc.
msconsultants.com

Ohio DOT Workspace
70\71 East Interchange 2E
www.msconsultants.com

Batchplot Spec: \\msconsultants.com\files\production\03\60\06634_2E\standards\plotdrv\batchplt.spc
Pen Table: \\msconsultants.com\files\Standards\ustn\ohdot\V8i\ms\plotting\pen\V8i_ms_std.tbl
Plot Driver: \\msconsultants.com\files\Standards\ustn\ohdot\v8i\ms\plotting\PDF.pltcfg

34" x 22"

Model: Sheet
Printed: 6/19/2018 @ 7:55:30 AM
File: N:\03\60\06634_2E\roadway\sheets\105322GB015.dgn
View: FENCE_VIEW1
By: jdouglas

1. STA. 804+71.78, ℄ I-70 = STA. 150+99.65, ℄ EIGHTEENTH ST.
2. STA. 53+25.62, ℄ MOOBERRY ST= STA. 149+17.75, ℄ 18TH ST.
3. STA. 904+66.69, ℄ MOOBERRY ST. = STA. 149+12.27, ℄ EIGHTEENTH ST.
4. STA. 907+33.78, END ℄ RAMP P2= P.I. STA. 57+33.78, DEF. = 1° 0' 00", BEGIN ℄ TRANS RAMP P2 (EAST) = STA. 807+32.94, 100.97' LT ℄ I-70
5. STA. 907+33.94, ℄ RAMP Q3 = STA. 807+35.02, 65.84' RT ℄ I-70
6. STA. 802+72.68 ℄ TRANS RAMP P2 (CENTRAL) = STA. 228+39.23, 36.00' LT ℄ TRANS I-70 WB (EAST SIDE)
7. STA. 207+35.02 ℄ TRANS I-70 EB (EAST SIDE) = STA. 807+35.02, 16.00' RT, ℄ I-70
8. STA. 807+35.02 ℄ I-70 = STA. 231+78.38, 17.05' RT ℄ TRANS I-71 SB
9. STA. 800+26.39 END ℄ TRANS I-71 NB = STA. 900+26.40 BEGIN ℄ RAMP P2
10. STA. 218+86.84 ℄ TRANS I-70 EB (EAST SIDE) = STA. 244+67.10, 37.62' RT ℄ TRANS I-70 WB (EAST SIDE)
11. STA. 63+71.63 ℄ TRANS RAMP P2 (EAST) = STA. 239+49.81, 36.00' LT ℄ TRANS I-70 WB (EAST SIDE)
12. STA. 242+03.88 ℄ TRANS I-71 SB (EAST SIDE) = STA. 217+60.74, 11.00' LT ℄ TRANS I-70 EB (EAST SIDE)

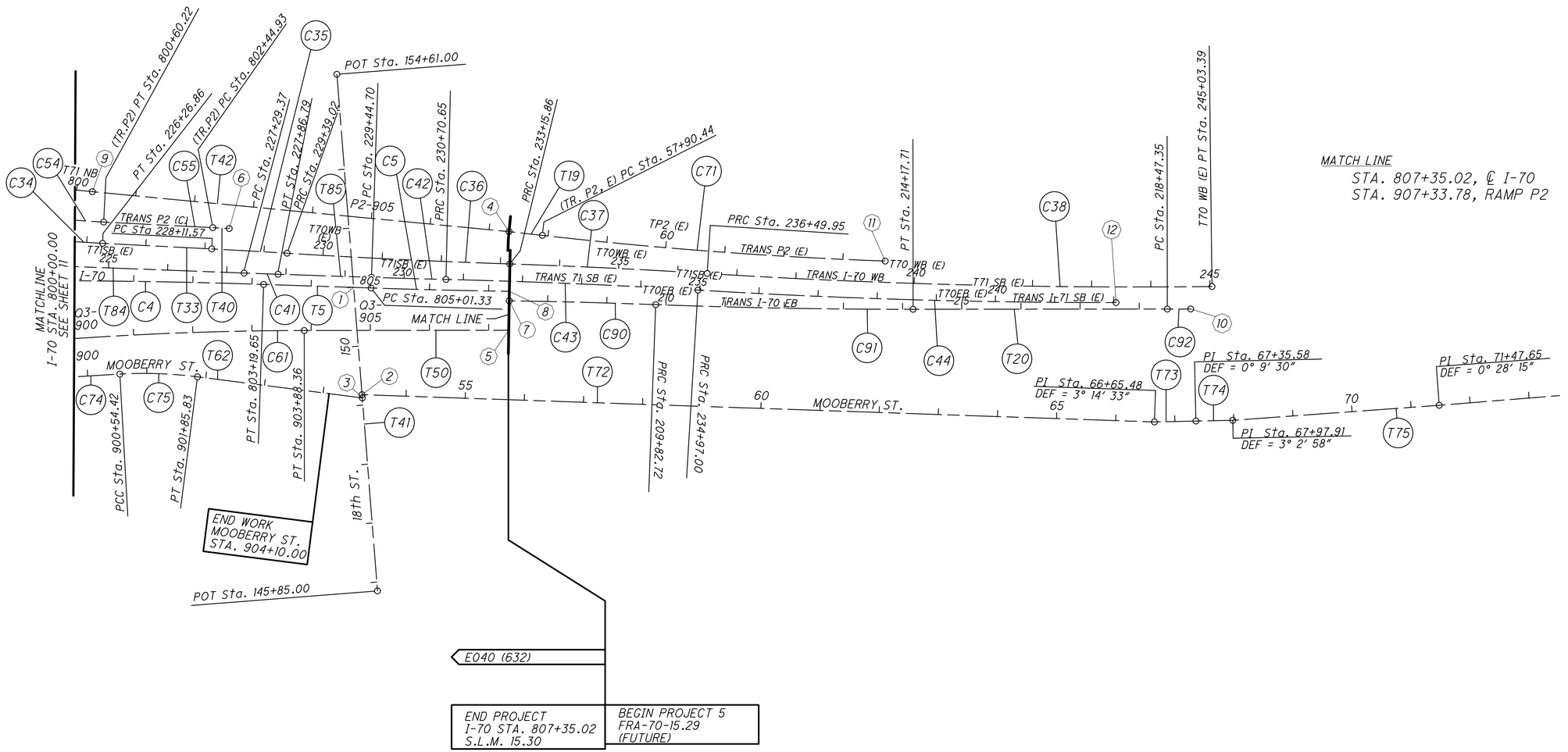

MATCH LINE
STA. 807+35.02, ℄ I-70
STA. 907+33.78, RAMP P2

HORIZONTAL SCALE IN FEET
0 50 100 200

CALCULATED
CHECKED

GEOMETRIC PLAN
I70 STA. 800+00.00 TO 825+00.00

FRA-70-14.54

ms consultants, inc.

PLOT.CEL

ms consultants, inc.
rmsconsultants.com

www.rmsconsultants.com

Ohio DOT Workspace
70\71 East Interchange 2E

1"
0.5"
0

PCF: ohdot1V8i
PCF: 60-06634_2E_Columbus

Batchplot Spec: \\rmsconsultants.com\files\production\03\60\06634_2E\standards\ohdot\batchplt.spc
Pen Table: \\rmsconsultants.com\files\Standards\ustn\ohdot\V8i\rms\plotting\pen\V8i_ms_std.tbl
Plot Driver: \\rmsconsultants.com\files\Standards\ustn\ohdot\v8i\rms\plotting\PDF.pltcfg

34" x 22"

View: FENCE_VIEW1
By: jdouglas

Model: Sheet
Printed: 6/19/2018 @ 7:55:34 AM
File: N:\03\60\06634_2E\roadway\sheets\1053220816.dgn

I-70

C4

P.I. STA. 801+19.01
Δ = 2° 00′ 24″ (RT)
Dc = 0° 30′ 00″
R = 11,459.16′
T = 200.69′
L = 401.33′
E = 1.76′
PC = 799+18.32
PT = 803+19.65
V (des) = 60 MPH
e (max) = NC
WIDENING = N/A

T5

STA. = 803+19.65
STA. = 805+01.33
L = 181.68′
BRG. = S 80°29′36″ E

C5

P.I. STA. 806+18.18
Δ = 1° 00′ 46″ (LT)
Dc = 0° 26′ 00″
R = 13,222.10′
T = 116.85′
L = 233.70′
E = 0.52′
PC = 805+01.33
PT = 807+35.03
V (des) = 60 MPH
e (max) = NC
WIDENING = N/A

TRANS I-71 SB (EAST SIDE)

T84

STA. = 220+69.52
STA. = 227+29.37
L = 659.85′
BRG. = S 80° 12′ 22″ E

C41

P.I.Sta. 227+58.08
Δ = 0° 17′ 14″ (LT)
Dc = 0° 30′ 00″
R = 11,459.16′
T = 28.71′
L = 57.43′
E = 0.04′
PC = 227+29.37
PT = 227+86.79
V (des) = 55 MPH
e (max) = NC
WIDENING = N/A

T85

STA. = 227+86.79
STA. = 229+44.70
L = 157.90′
BRG. = S 80° 29′ 36″ E

C42

P.I.Sta. 230+07.68
Δ = 0° 32′ 48″ (LT)
Dc = 0° 26′ 02″
R = 13,204.11′
T = 62.98′
L = 125.96′
E = 0.15′
PC = 229+44.70
PT = 230+70.65
V (des) = 55 MPH
e (max) = NC
WIDENING = N/A

C43

P.I.Sta. 232+83.85
Δ = 2° 07′ 54″ (RT)
Dc = 0° 30′ 00″
R = 11,459.16′
T = 213.20′
L = 426.35′
E = 1.98′
PRC Sta. 230+70.65
PRC Sta. 234+97.00
V (des) = 55 MPH
e (max) = NC
WIDENING = N/A

C44

P.I.Sta. 238+50.55
Δ = 3° 32′ 04″ (LT)
Dc = 0° 30′ 00″
R = 11,459.16′
T = 353.55′
L = 706.88′
E = 5.45′
PC = 234+97.00
PT = 242+03.88
V (des) = 55 MPH
e (max) = NC
WIDENING = N/A

TRANS I-70 EB (EAST SIDE)

C90

P.I.Sta. 208+58.87
Δ = 1° 14′ 18″ (RT)
Dc = 0° 30′ 00″
R = 11,459.16′
T = 123.85′
L = 247.69′
E = 0.67′
PC = 207+35.02
PRC = 209+82.72
V (des) = 60 MPH
e (max) = NC
WIDENING = N/A

C91

P.I.Sta. 212+00.24
Δ = 2° 10′ 30″ (LT)
Dc = 0° 30′ 00″
R = 11,459.16′
T = 217.53′
L = 435.00′
E = 2.06′
PRC = 209+82.72
PT = 214+17.71
V (des) = 60 MPH
e (max) = NC
WIDENING = N/A

T20

STA. = 214+17.71
STA. = 218+47.35
L = 429.63′
BRG. = S 82° 26′ 33″ E

C92

P.I.Sta. 218+67.10
Δ = 0° 10′ 44″ (LT)
Dc = 0° 27′ 10″
R = 12,656.92′
T = 19.75′
L = 39.50′
E = 0.02′
PC = 218+47.35
PT = 218+86.84
V (des) = 60 MPH
e (max) = NC
WIDENING = N/A

TRANS I-70 WB (EAST SIDE)

C34

P.I.Sta. 224+92.29
Δ = 8° 05′ 16″ (LT)
Dc = 3° 00′ 00″
R = 1,909.86′
T = 135.02′
L = 269.59′
E = 4.77′
PC Sta. 223+57.27
PT Sta. 226+26.86
V (des) = 55 MPH
e (max) = 0.050
WIDENING = N/A

T33

STA. = 226+26.86
STA. = 228+11.57
L = 184.70′
BRG. = S 79° 27′ 07″ E

C35

P.I.Sta. 228+75.29
Δ = 0° 38′ 14″ (RT)
Dc = 0° 30′ 00″
R = 11,459.16′
T = 63.73′
L = 127.45′
E = 0.18′
PC Sta. 228+11.57
PRC Sta. 229+39.02
V (des) = 55 MPH
e (max) = NC
WIDENING = N/A

C36

P.I.Sta. 231+27.45
Δ = 1° 38′ 04″ (LT)
Dc = 0° 26′ 01″
R = 13,210.10′
T = 188.43′
L = 376.84′
E = 1.34′
PRC Sta. 229+39.02
PRC Sta. 233+15.86
V (des) = 55 MPH
e (max) = NC
WIDENING = N/A

C37

P.I.Sta. 234+82.91
Δ = 1° 40′ 14″ (RT)
Dc = 0° 30′ 00″
R = 11,459.16′
T = 167.06′
L = 334.09′
E = 1.22′
PRC Sta. 233+15.86
PRC Sta. 236+49.95
V (des) = 55 MPH
e (max) = NC
WIDENING = N/A

TRANS I-70 WB (EAST SIDE)

C38

P.I.Sta. 240+76.87
Δ = 4° 16′ 02″ (LT)
Dc = 0° 30′ 00″
R = 11,459.16′
T = 426.92′
L = 853.45′
E = 7.95′
PRC Sta. 236+49.95
PT Sta. 245+03.39
V (des) = 55 MPH
e (max) = NC
WIDENING = N/A

RAMP P2

T42

STA. = 900+26.40
STA. = 907+33.80
L = 707.40′
BRG. = S 76°55′09″ E

TRANS RAMP P2 (CENTRAL)

C54

P.I.Sta. 797+44.12
Δ = 22° 35′ 40″ (LT)
Dc = 3° 31′ 36″
R = 1,624.58′
T = 324.54′
L = 640.65′
E = 32.10′
PC = 794+19.57
PT = 800+60.22
V (des) = 50 MPH
e (max) = 0.0482
WIDENING = N/A

T40

STA. = 800+60.22
STA. = 802+44.93
L = 184.70′
BRG. = S 79° 27′ 07″ E

C55

P.I.Sta. 802+58.80
Δ = 0° 08′ 18″ (RT)
Dc = 0° 29′ 54″
R = 11,495.16′
T = 13.88′
L = 27.75′
E = 0.01′
PC = 802+44.93
PT = 802+72.68
V (des) = 50 MPH
e (max) = NC
WIDENING = N/A

RAMP Q3

C61

P.I. STA. 901+34.72
Δ = 5° 04′ 34″ (RT)
Dc = 1° 00′ 00″
R = 5,729.58′
T = 253.98′
L = 507.62′
E = 5.63′
PC = 898+80.74
PT = 903+88.36
V (des) = 55 MPH
e (max) = 0.023
WIDENING = N/A

T36

STA. = 903+88.36
STA. = 907+33.94
L = 345.58′
BRG. = S 82°27′31″ E

TRANS RAMP P2 (EAST)

T19

STA. = 57+33.78
STA. = 57+90.44
L = 56.67′
BRG. = S 75° 55′ 09″ E

C71

P.I.Sta. 60+81.18
Δ = 4° 21′ 32″ (LT)
Dc = 0° 45′ 00″
R = 7,639.44′
T = 290.73′
L = 581.19′
E = 5.53′
PC = 57+90.44
PT = 63+71.63
V (des) = 55 MPH
e (max) = 0.018
WIDENING = N/A

EIGHTEENTH ST.

T41

STA. = 145+85.00
STA. = 154+61.00
L = 876.00′
BRG. = N 3°07′06″ E

MOOBERRY ST.

C74

P.I. STA. 899+59.41
Δ = 1° 55′ 19″ (RT)
Dc = 1° 00′ 41″
R = 5,664.91′
T = 95.02′
L = 190.03′
E = 0.80′
PC = 898+64.39
PCC = 900+54.42
V (des) = 30 MPH
e (max) = NC
WIDENING = N/A

C75

P.I. STA. 901+20.31
Δ = 10° 30′ 46″ (RT)
Dc = 8° 00′ 00″
R = 716.20′
T = 65.89′
L = 131.41′
E = 3.02′
PCC = 900+54.42
PT = 901+85.83
V (des) = 30 MPH
e (max) = NC
WIDENING = N/A

T62

STA. = 901+85.83
STA. = 904+66.69
L = 280.86′
BRG. = S 75°06′00″ E

T72

STA. = 53+25.62
STA. = 66+65.48
L = 1339.86′
BRG. = S 80° 25′ 00″ E

T73

STA. = 66+65.48
STA. = 67+35.58
L = 70.11′
BRG. = S 83° 39′ 33″ E

T74

STA. = 67+35.58
STA. = 67+97.91
L = 62.33′
BRG. = S 83° 30′ 03″ E

T75

STA. = 67+97.91
STA. = 71+47.65
L = 345.24′
BRG. = S 87° 01′ 16″ E

CALCULATED | CHECKED

ALIGNMENT DATA

FRA-70-14.54

ms consultants, inc.

PLOT.CEL

ms consultants, inc.
msconsultants.com

www.msconsultants.com

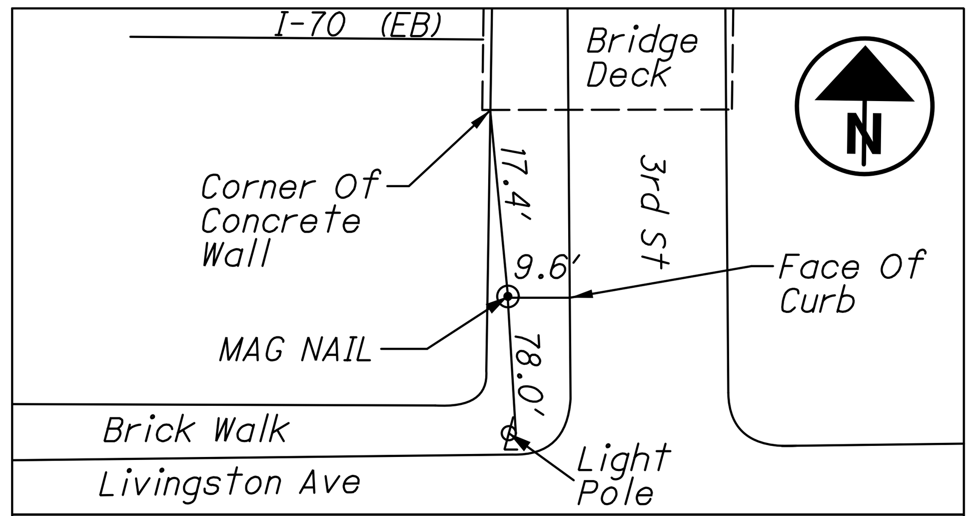

STA. ID. 070-112
NORTHING 711743.071 EASTING 1829365.633
ELEV. 751.40
PROPOSED I-70 STA. 748+14.34, 98.61 RT

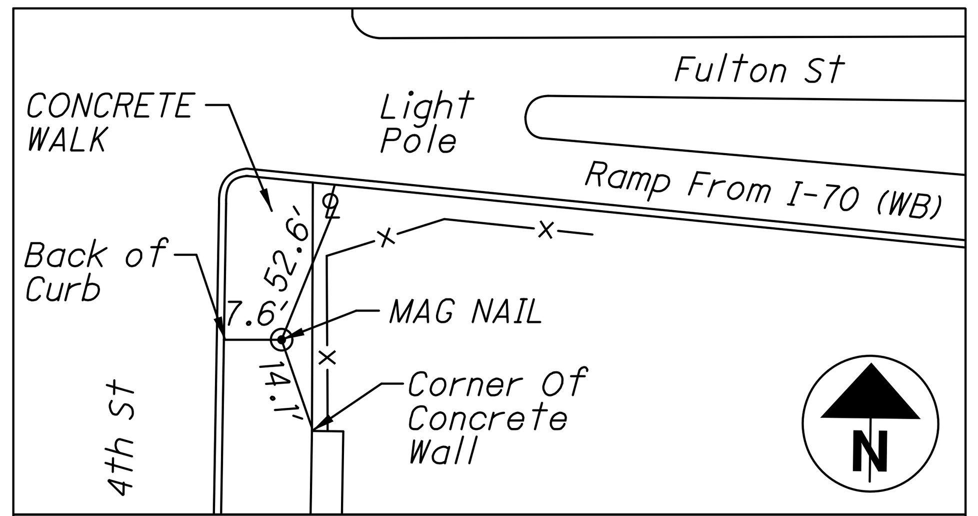

STA. ID. 070-113
NORTHING 711975.490 EASTING 1829887.580
ELEV. 752.52
PROPOSED I-70 STA. 753+67.92, 42.80 LT

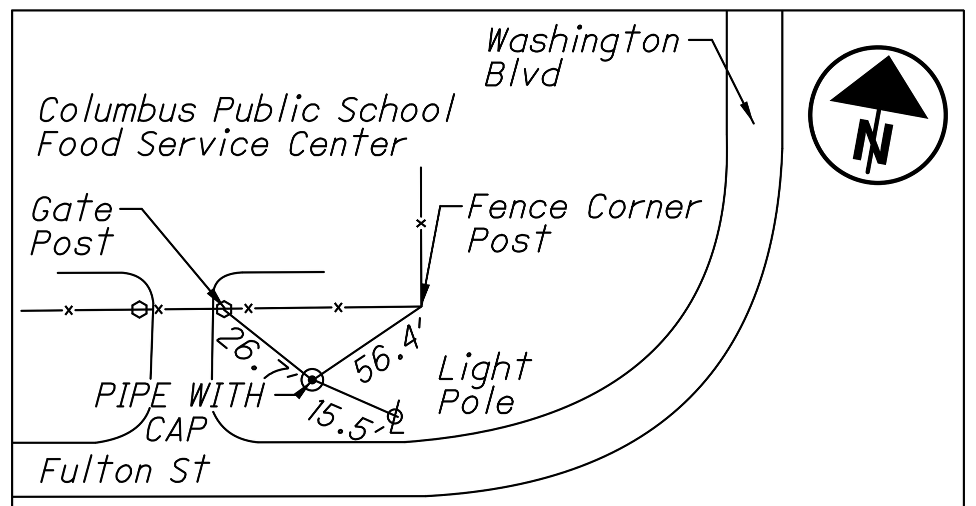

STA. ID. 070-117
NORTHING 712466.135 EASTING 1832217.628
ELEV. 776.67
WASHINGTON BLVD. STA. 69+44.32, 27.31 LT

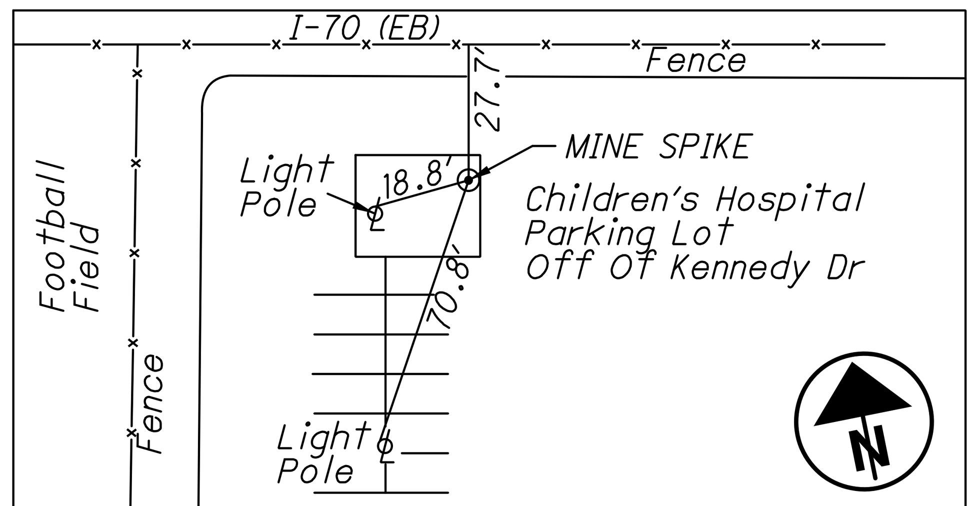

STA. ID. 070-118
NORTHING 712116.196 EASTING 1832516.937
ELEV. 779.70
PROPOSED RAMP N3 880+00.25, 48.45 LT

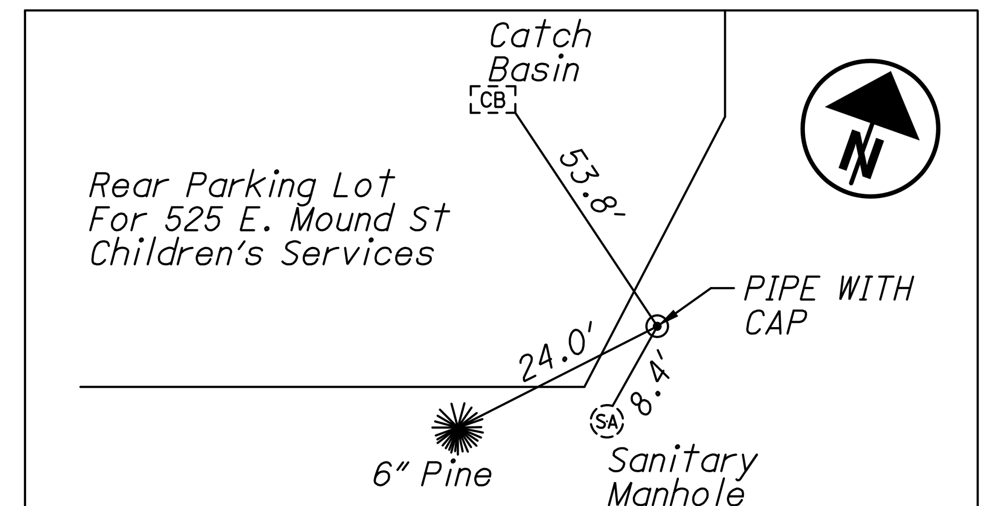

STA. ID. 070-119
NORTHING 712614.442 EASTING 1832705.237
ELEV. 780.64
PROPOSED RAMP Q1 STA.1002+52.88, 2214 LT

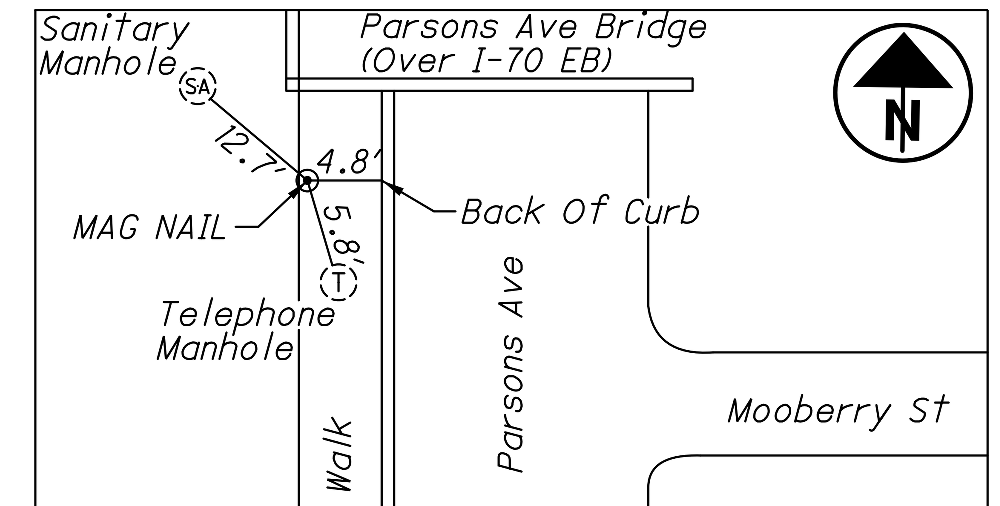

STA. ID. 070-120
NORTHING 712149.557 EASTING 1833262.843
ELEV. 781.46
PARSON AVE. STA. 182+15.44, 16.21 LT

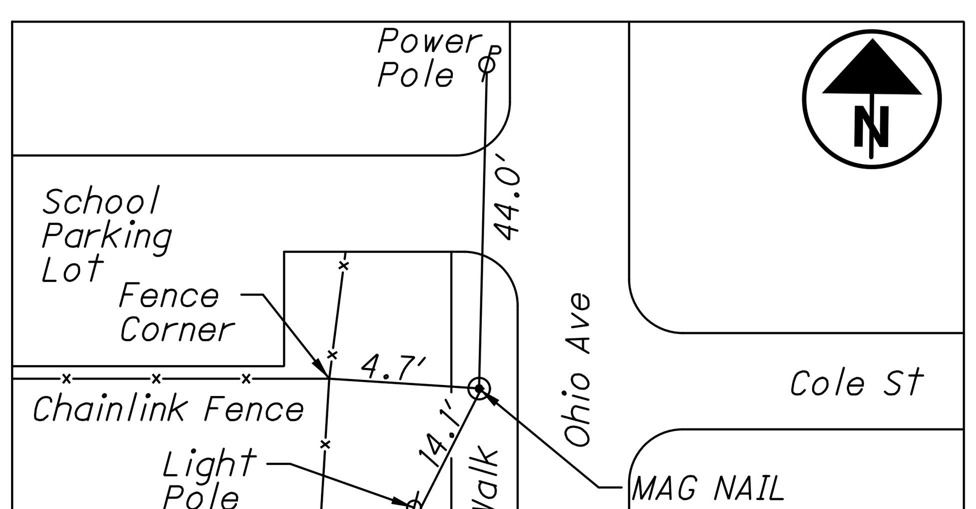

STA. ID. 070-124
NORTHING 712178.008 EASTING 1836396.026
ELEV. 791.00
PROPOSED I-70 STA. 819+06.96,175.35 LT

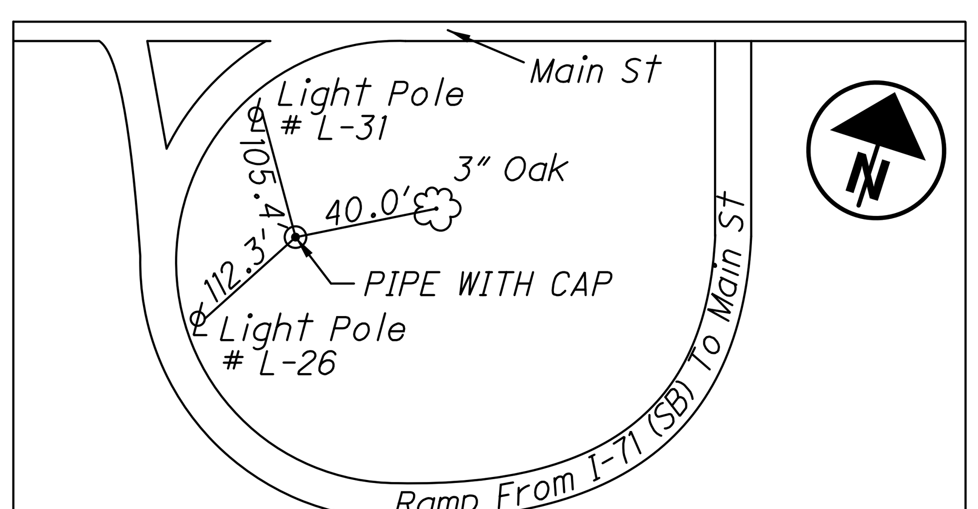

STA. ID. 071-210
NORTHING 713280.311 EASTING 1832756.565
ELEV. 782.58
PROPOSED RAMP Q2 907+21.84, 108.81 LT

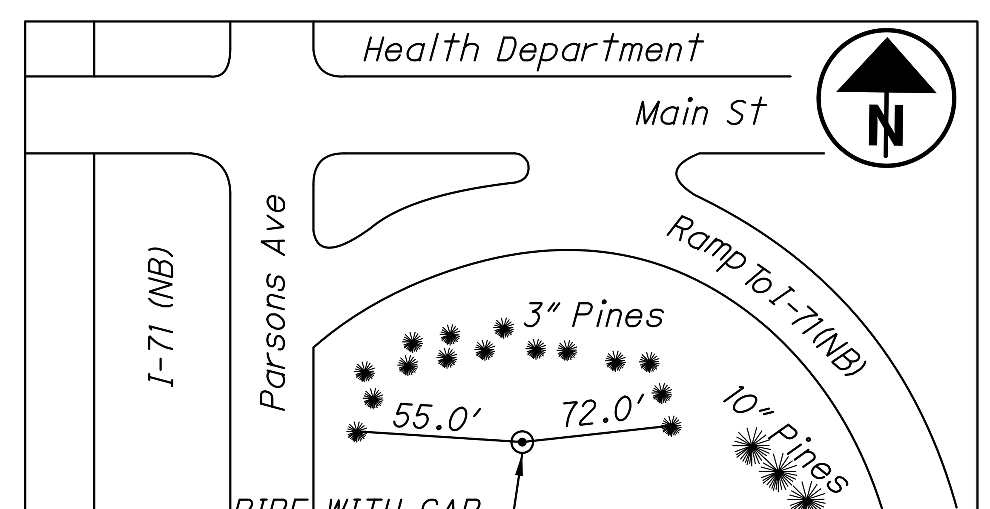

STA. ID. 071-211
NORTHING 713282.096 EASTING 1833557.56173
ELEV. 796.58
PARSON AVE. STA. 193+69.07, 85.03 RT

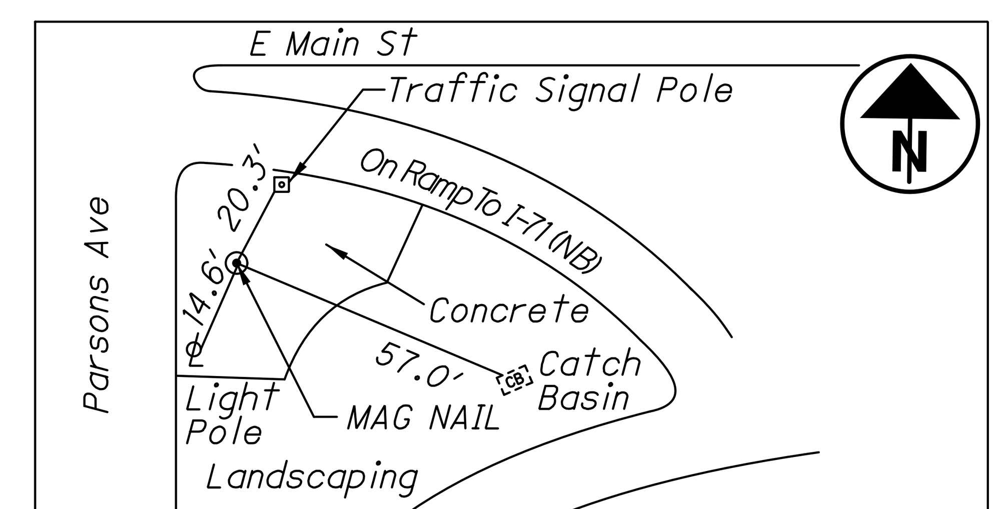

STA. ID. 071-212
NORTHING 713490.694 EASTING 1833404.934
ELEV. 785.55
PARSON AVE. STA. 1958+96.06, 38.59 LT

FRANKLIN COUNTY ENGINEER MONUMENTS

THE COODINATE VALUES SHOWN HEREIN ARE PROJECT GROUND BASED ON THE OHIO STATE PLANE COORDINATES SYSTEM NAD 83 (1986), SOUTH ZONE, BY TIES TO THE FRANKLIN COUNTY ENGINEER MONUMENTS KNOWN AS:

- FRANK 143
- FRANK 134
- COC 5-83
- CONNER

TO CONVERT FROM GRID COORDINATES TO PROJECT GROUND COODINATES, SCALE NORTHING AND EASTING RADIALLY FROM "FRANK 143" (NORTHING = 711,726.0754, EASTING = 1,840,542.0310) BY THE PROJECT ADJUSTMENT FACTOR 1.000043907.

CALCULATED
CHECKED

REFERENCE POINTS, BENCHMARKS & COORDINATES

FRA-70-14.54

ms consultants, inc.

34" x 22"

Model: Sheet View: FENCE_VIEW1
Printed: 6/19/2018 @ 7:55:35 AM By: jdouglas
File: N:\03\60\06634_2E\roadway\sheets\105322GB020.dgn

PLOT.CEL

ms consultants, inc.
msconsultants.com

www.msconsultants.com
Ohio DOT Workspace
70\71 East Interchange 2E

0 0.5" 1"

PCF: ohdot\V8i
PCF: 60-06634_2E_Columbus

Batchplot Spec: \\msconsultants.com\Files\production\Q3\60\06634_2E\standards\plotdrv\batchplt.spc
Pen Table: N:\Q3\60\06634_2E\standards\tables\V8i_ms_std_NoClouds.tbl
Plot Driver: \\msconsultants.com\Files\Standards\usetn\ohdot\v8i\ms\plotting\PDF.pltdrv

Model: Sheet
Printed: 2/12/2019 @ 2:20:34 PM
File: N:\Q3\60\06634_2E\roadway\sheets\105322\G7001.dgn
View: FENCE_VIEW1
By: hbrendlinger

34" x 22"

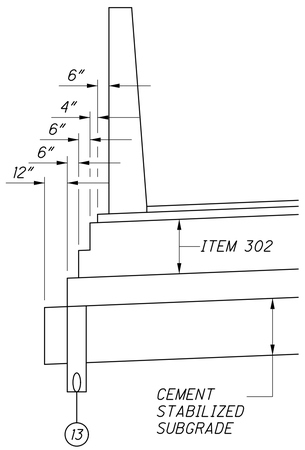

TYPICAL STEP DETAIL WITH BARRIER

APPLIES TO EITHER SIDE

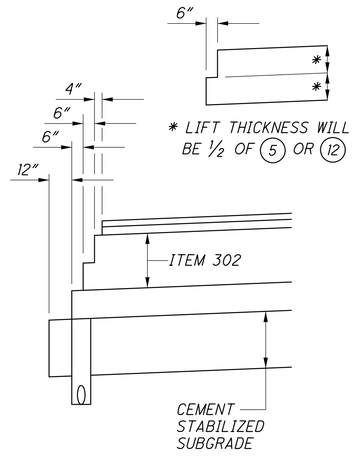

TYPICAL STEP DETAIL WITHOUT BARRIER

APPLIES TO EITHER SIDE

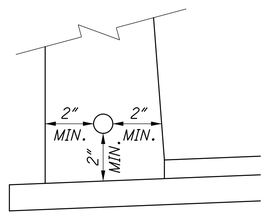

2" STEEL RACEWAYS IN TYPE D BARRIER

N.T.S.

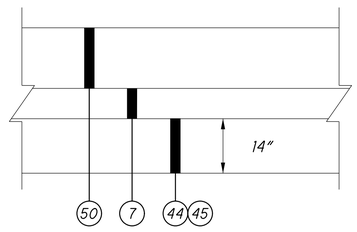

INTERSECTION INLAY DETAIL

(N.T.S.)

THIS SHALL OCCUR AT THE FOLLOWING INTERSECTIONS:

PARSONS/MOOBERRY (NO STABILIZATION)

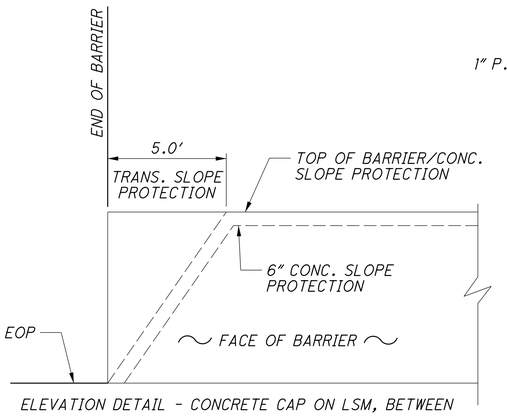

ELEVATION DETAIL - CONCRETE CAP ON LSM, BETWEEN WALL/ABUTMENTS AND BARRIER PROTECTING TRANSITION DOWN AT ENDS OF BARRIER

NTS

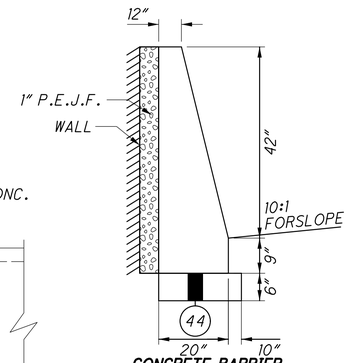

CONCRETE BARRIER, SINGLE SLOPE TYPE "D", AS PER PLAN "D"

NOTE

COST FOR EXCAVATION, P.E.J.F. AND GRANULAR MATERIAL TO BE INCLUDED IN COST OF BARRIER

LEGEND

PROPOSED

(1) ITEM 442 - 1.5" ASPHALT CONCRETE SURFACE COURSE, 12.5mm, TYPE A (446)
(2) ITEM 407 - NON-TRACKING TACK COAT (RATE PER CMS TABLE 407.06-1)
(3) ITEM 442 - 1.75" ASPHALT CONCRETE INTERMEDIATE COURSE, 19mm, TYPE A (446)
(4) ITEM 254 - PAVEMENT PLANING, ASPHALT CONCRETE
(5) ITEM 302 - 11.5" ASPHALT CONCRETE BASE, PG64-22
(6) ITEM 302 - ASPHALT CONCRETE BASE, PG64-22 (THICKNESS PER SHEET 50)
(7) ITEM 304 - 6" AGGREGATE BASE
(8) ITEM 204 - SUBGRADE COMPACTION
(9) ITEM 441 - 1.25" ASPHALT CONCRETE SURFACE COURSE, TYPE 1, (448) PG64-22
(10) ITEM 441 - 1.75" ASPHALT CONCRETE INTERMEDIATE COURSE, TYPE 2 (448)
(11) ITEM 305 - 8" CONCRETE BASE, CLASS QC1
(12) ITEM 302 - 9.5" ASPHALT CONCRETE BASE, PG64-22
(13) ITEM 605 - 4" SHALLOW PIPE UNDERDRAINS
(14) ITEM 302 - 4" ASPHALT CONCRETE BASE, PG64-22
(15) ITEM 605 - 4" BASE PIPE UNDERDRAINS
(16) ITEM 606 - GUARDRAIL, TYPE MGS
(17) ITEM 608 - 4" CONCRETE WALK (8" AT DRIVES)
(18) ITEM 622 - CONCRETE BARRIER, SINGLE SLOPE, TYPE C1, AS PER PLAN
(19) ITEM 609 - CURB, MISC.: COLUMBUS 18" CONCRETE CURB, AS PER PLAN
(20) ITEM 609 - CURB, MISC.: STRAIGHT 18" GRANITE CURB, AS PER PLAN "A"
(21) ITEM 526 - REINFORCED CONCRETE APPROACH SLABS (T=17"), AS PER PLAN
(22) ITEM 601 - 6" CONCRETE SLOPE PROTECTION
(23) ITEM 622 - CONCRETE BARRIER, SINGLE SLOPE, TYPE B1
(24) ITEM 622 - CONCRETE BARRIER, SINGLE SLOPE, TYPE C
(25) ITEM 622 - CONCRETE BARRIER, SINGLE SLOPE, TYPE C, AS PER PLAN "A"
(26) ITEM 622 - CONCRETE BARRIER, SINGLE SLOPE, TYPE C1
(27) ITEM 622 - CONCRETE BARRIER, SINGLE SLOPE, TYPE B
(28) ITEM 622 - CONCRETE BARRIER, SINGLE SLOPE, TYPE D
(29) ITEM 622 - CONCRETE BARRIER, SINGLE SLOPE, TYPE D, AS PER PLAN "A"
(30) ITEM 659 - SEEDING AND MULCHING, CLASS 1
(31) ITEM 442 - (VARIABLE DEPTH) ASPHALT CONCRETE INTERMEDIATE COURSE, 19mm, TYPE A (448), AS PER PLAN
(32) ITEM 254 - PAVEMENT PLANING, ASPHALT CONCRETE, AS PER PLAN
(33) ITEM 304 - 8" AGGREGATE BASE
(34) ITEM 304 - 4" AGGREGATE BASE
(35) NOT USED
(36) ITEM 613 - LOW STRENGTH MORTAR BACKFILL
(37) 42" PARAPET (ON APPROACH SLAB)
(38) NOT USED
(39) ITEM 452 - 11" NON-REINFORCED CONCRETE PAVEMENT, CLASS QC1
(40) ITEM 204 - 6" GRANULAR MATERIAL, TYPE C
(41) NOT USED
(42) NOT USED
(43) ITEM 609 - CURB, TYPE 4-C
(44) ITEM 304 - AGGREGATE BASE
(45) ITEM 204 - GEOTEXTILE FABRIC, 712.09, TYPE D
(46) NOT USED
(47) NOT USED
(48) ITEM 204 - PROOF ROLLING
(49) NOT USED
(50) ITEM 452 - 12" NON-REINFORCED CONCRETE PAVEMENT, CLASS QC1
(51) ITEM 442 - 1.5" ASPHALT CONCRETE SURFACE COURSE, 12.5mm, TYPE A (446), PG 76-22M
(52) ITEM 442 - 1.75" ASPHALT CONCRETE INTERMEDIATE COURSE, 19mm, TYPE A (446), PG 76-22M
(53) NOT USED
(54) ITEM 206 - CEMENT STABILIZED SUBGRADE, 14 INCHES DEEP
(55) NOT USED
(56) NOT USED
(57) ITEM 622 - CONCRETE BARRIER, SINGLE SLOPE, TYPE C, AS PER PLAN "B"
(58) NOT USED
(59) ITEM 622 - CONCRETE BARRIER, SINGLE SLOPE, TYPE D, AS PER PLAN "B"
(60) ITEM 622 - BARRIER, MISC.: NEW JERSEY STYLE, TYPE B50, AS PER PLAN
(61) ITEM 302 - 8" ASPHALT CONCRETE BASE, PG 64-22
(62) ITEM 622 - CONCRETE BARRIER, SINGLE SLOPE, TYPE D, AS PER PLAN "D"
(63) ITEM 622 - CONCRETE BARRIER, SINGLE SLOPE, TYPE D, AS PER PLAN "C"

NOTE:
1) LONGITUDINAL JOINT ADHESIVE SHALL BE USED FOR ITEM 442, PER SUPPLEMENTAL SPECIFICATION 875

2) ITEM 254 - PAVEMENT PLANING, ASPHALT CONCRETE, AS PER PLAN IS FOR VARIABLE DEPTH ASPHALT PAVEMENT PLANING. THE VARIABLE DEPTHS ARE CALLED OUT IN THE MILLING DEPTH/LEVELING COURSE CHARTS IN THE APPLICABLE TYPICAL SECTION SHEETS.

EXISTING

(A) ASPHALT CONCRETE (VARIABLE THICKNESS)
(B) AGGREGATE BASE
(C) EXISTING CURB
(D) NOT USED
(E) 6" AGGREGATE BASE
(F) 8" PORTLAND CEMENT CONCRETE BASE COURSE
(G) NOT USED
(H) 6" SUBBASE GRADING "A" OR "B" AS PER PLAN
(I) STANDARD CONCRETE CURB, TYPE 6
(J) 3" WATERPROOFED AGGREGATE BASE COURSE
(K) CONCRETE WALK
(L) POUROUS BASE COURSE (VARIABLE THICKNESS)
(M) UNDERDRAIN
(N) BRICK WALK
(O) EXISTING BARRIER
(P) PORTLAND CEMENT CONCRETE BASE
(Q) 6" STABILIZED CRUSHED AGGREGATE SHOULDERS
(R) ROLLER COMPACTED CONCRETE BASE
(S) EXISTING GUARDRAIL
(T) EXISTING GRANITE CURB
(U) 15" ASPHALT CONCRETE BASE
(V) 4" FREE DRAINAGE BASE
(W) NON-REINFORCED CONCRETE PAVEMENT

CALCULATED | CHECKED

TYPICAL SECTIONS LEGEND

FRA-70-14.54

ms consultants, inc.

ms consultants, inc.
msconsultants.com
www.msconsultants.com

TRANSITIONAL PAVEMENT TYPICAL SECTIONS I-70 EB (W)
STA. 853+86.76 TO STA. 856+32.13

FRA-70-14.54

CALCULATED DWH | CHECKED TAZ

CROSS REFERENCES

SHT NO	DESCRIPTION
580-587	PLAN
1108	NEW JERSEY BARRIER

NOTE: SEE SUPERELEVATION TABLES FOR TRANSITION STATIONING AND RATES.

FOR LEGEND, SEE SHEET 17

(A) SEE UNDERDRAIN SUB-SUMMARY SHEETS FOR DEPTH AND QUANTITIES.

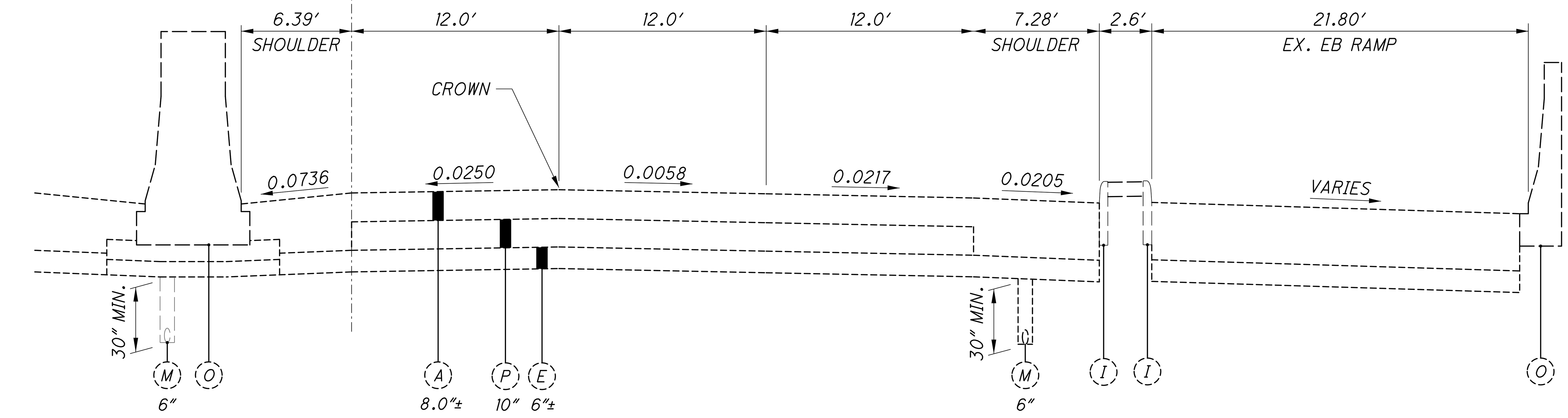

ADJOINING SECTION - TRANS. I-70 EB

SECTION APPLIES:

STA. 853+86.76

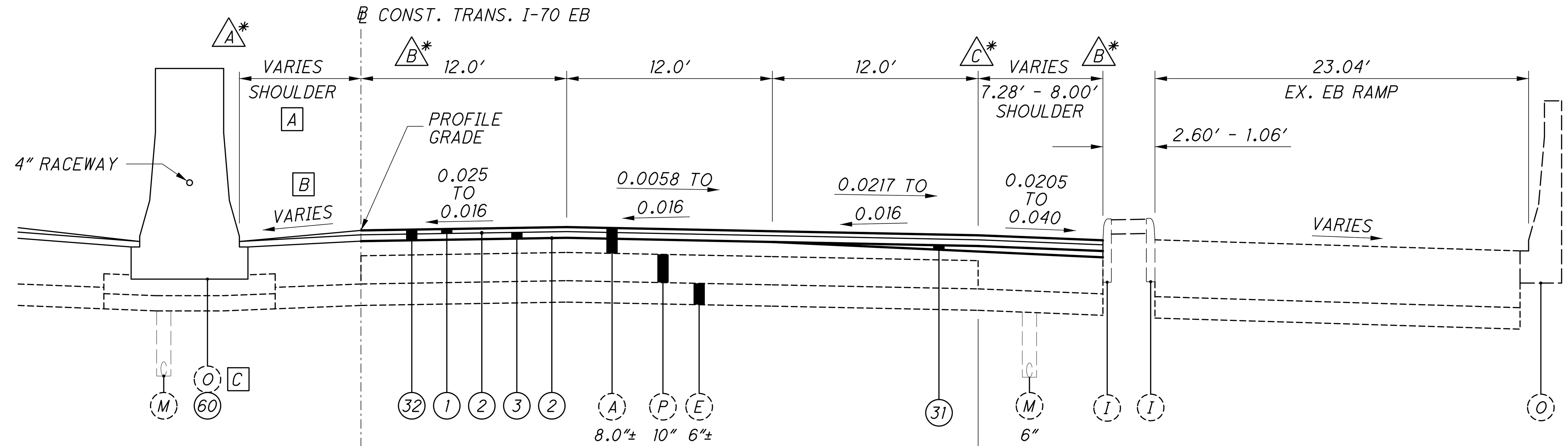

STA. 853+93.95 TO STA. 854+71.94 = 85.18 LIN. FT.

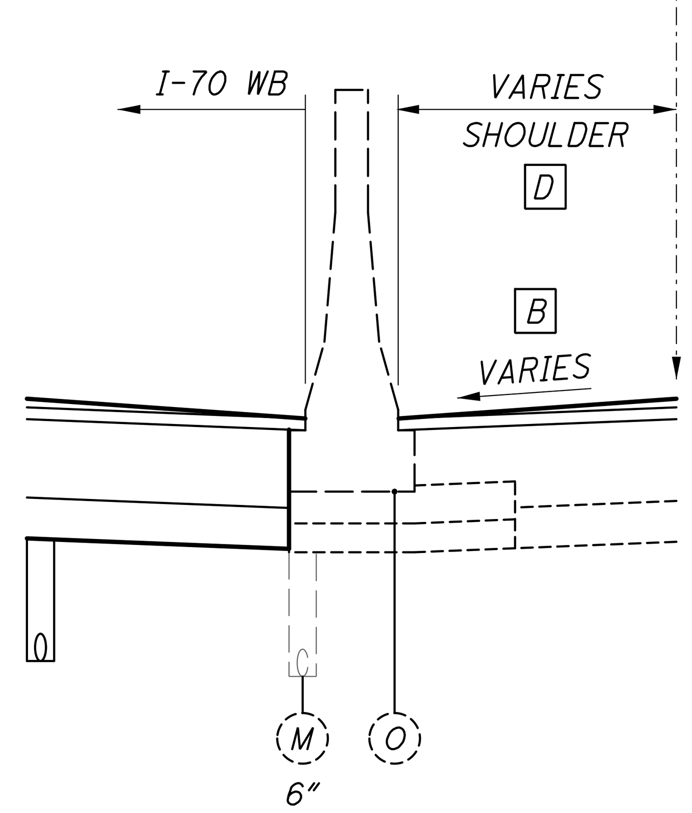

STA. 853+86.76 TO STA. 853+93.95 = 7.19 LIN. FT.

RESURFACING SECTION - TRANS. I-70 EB

SECTION APPLIES:

STA. 853+86.76 TO STA. 856+32.13 = 245.37 LIN. FT.

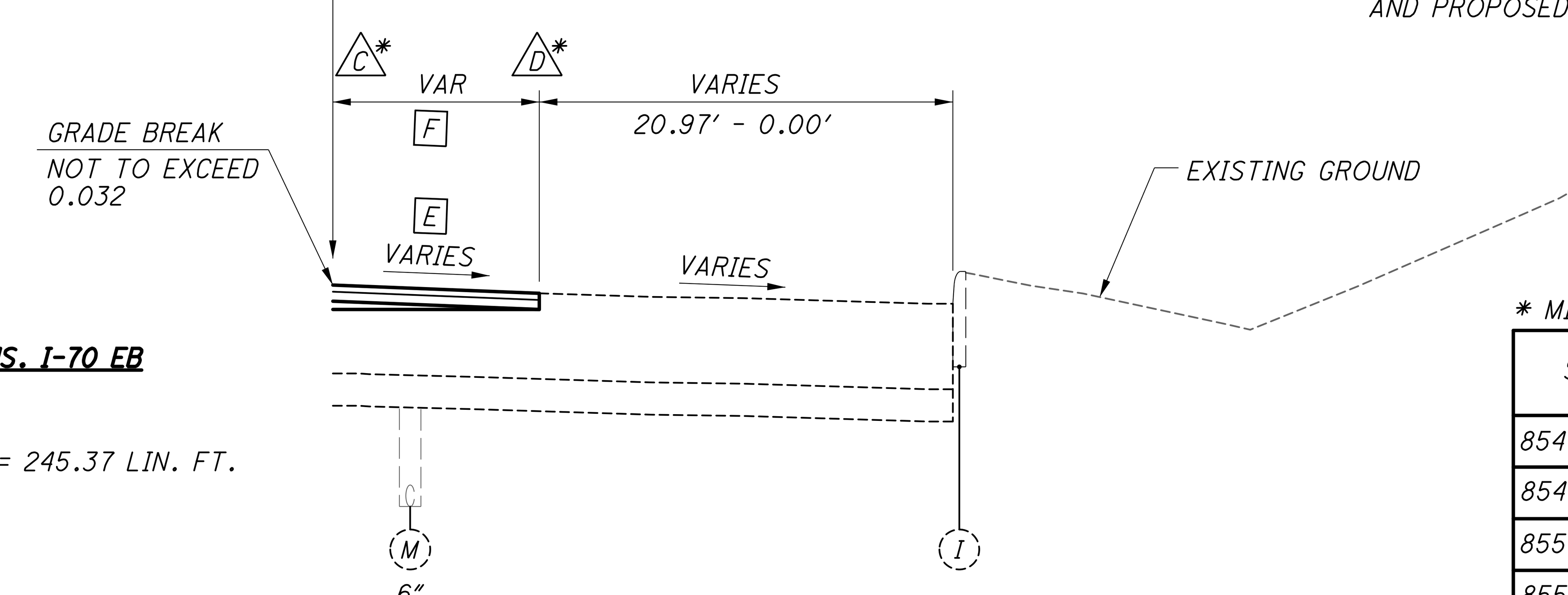

STA. 854+14.12 TO STA. 856+32.13 = 218.01 LIN. FT.

[F] STA. 854+14.12 TO STA. 854+50.00 = 8.0′
STA. 854+50.00 TO STA. 855+00.00 = 8.0′ - 14.0′
STA. 855+00.00 TO STA. 855+50.00 = 14.0′ - 15.5′
STA. 855+50.00 TO STA. 856+00.00 = 15.5′ - 21.0′
STA. 856+00.00 TO STA. 856+32.13 = 21.0′ - 22.84′

[A] STA. 853+86.76 TO STA. 853+93.95 = 6.54′± - 6.76′±
STA. 853+93.95 TO STA. 854+13.95 = 6.76′ - 6.53′
STA. 854+13.95 TO STA. 854+23.95 = 6.53′ - 6.63′
STA. 854+23.95 TO STA. 854+63.94 = 6.63′ - 7.97′
STA. 854+63.94 TO STA. 854+71.94 = 7.97′

[B] MATCH EXISTING ELEV. AT BARRIER FACE

[C] EXISTING BARRIER:
STA. 853+86.76 TO STA. 853+93.95

[D] STA. 854+71.94 TO STA. 856+32.13 = 7.97′ - 8.0′

[E] FEATHER OUT PROPOSED PAVEMENT OVER EXISTING TO ELIMINATE DIFFERENCE (LIP) BETWEEN EXISTING AND PROPOSED PAVEMENT.

* MILLING DEPTH/LEVELING COURSE CHART

STA.	A*	B*	C*	D*
854+00.00	-0.27′	-0.30′	-0.36′	-0.27′
854+50.00	-0.27′	-0.24′	-0.15′	-0.27′
855+00.00	-0.27′	-0.37′	-0.07′	-0.27′
855+50.00	-0.27′	-0.27′	+0.12′	-0.27′
856+00.00	-0.27′	-0.22′	+0.28′	-0.27′

(+) = VAR. DEPTH ASPHAULT CONC. (31)
(-) = MILLING DEPTH

34″ x 22″

Batchplot Spec: \\msconsultants.com\files\production\03\60\06634_2E\standards\plotdrv\batchplt.spc
Pen Table: \\msconsultants.com\files\Production\03\60\06634_2E\deliverables\2018-06-20 2E_Submittal_PDF_PLAN SHEET
Plot Driver: \\msconsultants.com\files\Standards\ustn\ohdot\v8i\ms\plotting\PDF.pltcfg

Model: Sheet View: FENCE_VIEW1
Printed: 6/19/2018 @ 7:56:00 AM By: jdouglas
File: N:\03\60\06634_2E\roadway\sheets\105322GY006.dgn

ms consultants, inc.

PLOT.CEL

ms consultants, inc.
msconsultants.com

Ohio DOT Workspace
70\71 East Interchange 2E
www.msconsultants.com

1"
0.5"
0

Batchplot Spec: \\msconsultants.com\Files\Production\03\60\06634_2E\standards\plotdrv\batchplt.spc
Pen Table: \\msconsultants.com\Files\Production\03\60\06634_2E\deliverables\ViBL_ms_std.tbl PCF: ohdot\ViBi
Plot Driver: \\msconsultants.com\Files\Standards\ustn\ohdot\v8i\ms\plotting\PDF.pltcfg PCF: 60-06634_2E_Columbus

Model: Sheet View: FENCE_VIEW1
Printed: 7/24/2018 @ 2:44:08 PM By: jwilacres
File: N:\03\60\06634_2E\roadway\sheets\105320\G1007.dgn

34" x 22"

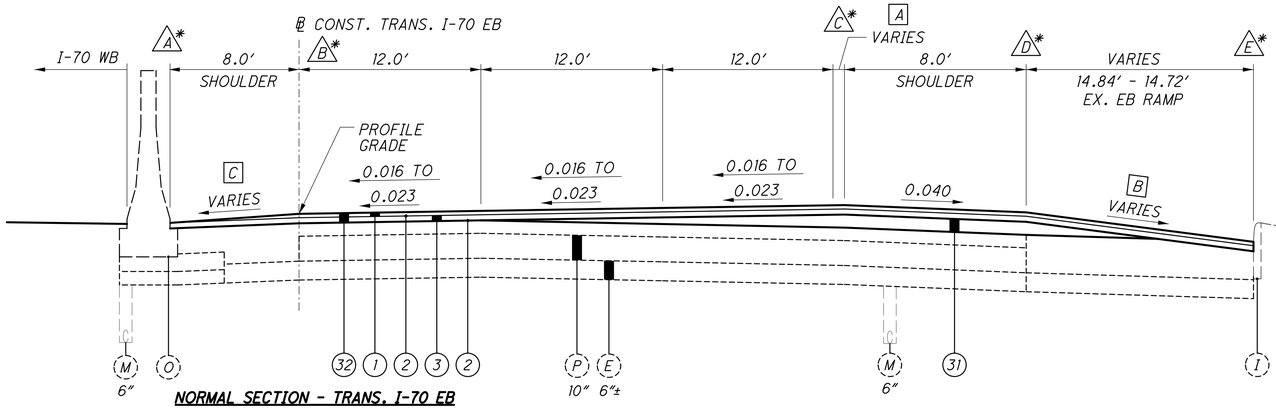

NORMAL SECTION - TRANS. I-70 EB

SECTION APPLIES:

STA. 856+32.13 TO STA. 857+00.00 = 67.87 LIN. FT.

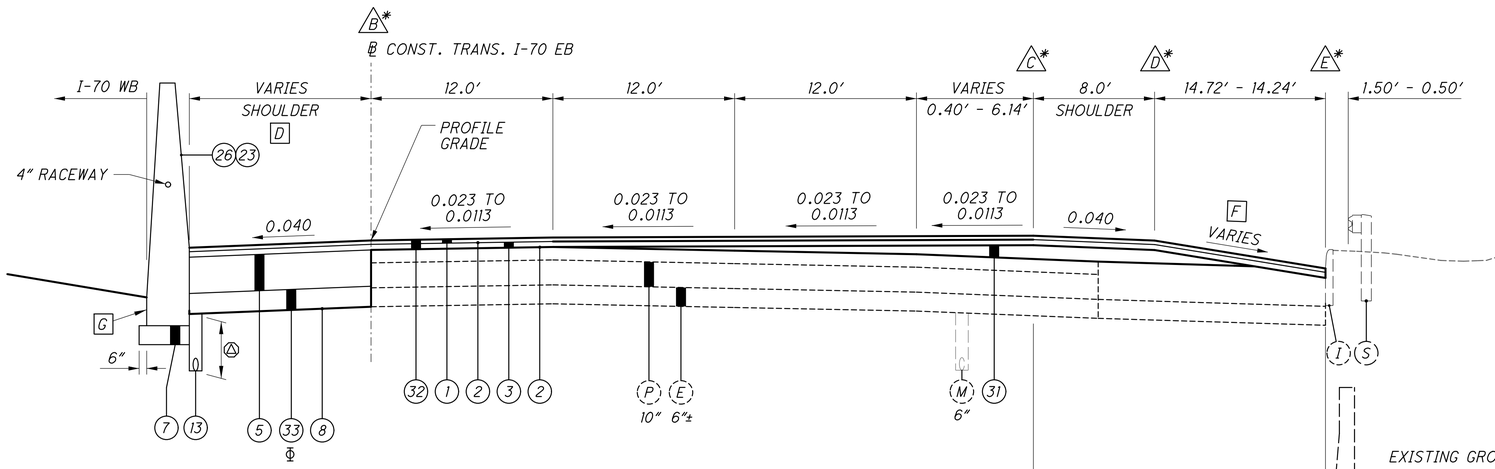

SUPERELEVATED SECTION - TRANS. I-70 EB

SECTION APPLIES:

STA. 857+00.00 TO STA. 859+00.00 = 200.00 LIN. FT.

‡ UNLESS OTHERWISE SHOWN IN CROSS SECTIONS

Φ VARIABLE DEPTH AT WIDENING. MINIMUM DEPTH CALLED OUT ON LEGEND SHEET. INCREASE DEPTH TO MATCH BOTTOM OF EXISTING SUB-GRADE ELEVATIONS IF DEEPER.

D STA. 857+00.00 TO STA. 858+00.10 = 8.0' - 12.0'
STA. 858+00.10 TO STA. 859+00.00 = 12.0'

E TRANSITION FROM EXISTING NEW JERSEY STYLE, TYPE D BARRIER TO A CONCRETE SINGLE SLOPE BARRIER, TYPE B FROM STA. 858+50.00 TO STA. 585+69.85.

F FEATHER OUT PROPOSED PAVEMENT OVER EXISTING TO ELIMINATE DIFFERENCE (LIP) BETWEEN EXISTING AND PROPOSED PAVEMENT.

G USE 9" CONCRETE FOUNDATION BASE PER SCD RM-4.3

A STA. 856+32.13 TO STA. 857+00.00 = 0.00' - 0.40'

B FEATHER OUT PROPOSED PAVEMENT OVER EXISTING TO ELIMINATE DIFFERENCE (LIP) BETWEEN EXISTING AND PROPOSED PAVEMENT.

C MATCH EXISTING ELEV. AT EXISTING BARRIER FACE

* MILLING DEPTH/LEVELING COURSE CHART

STA.	A*	B*	C*	D*	E*
856+50.00	-0.27'	-0.19'	+0.42'	+0.29'	-0.27'
857+00.00	-0.27'	-0.24'	+0.66'	+0.46'	-0.27'
857+50.00	0	-0.33'	+0.64'	+0.43'	-0.27'
858+00.00	0	-0.27'	+0.55'	+0.36'	-0.27'
858+50.00	0	-0.20'	+0.34'	+0.15'	-0.27'
859+00.00	0	-0.09'	+0.09'	0	0

(+) = VAR. DEPTH ASPHAULT CONC. (31)
(-) = MILLING DEPTH

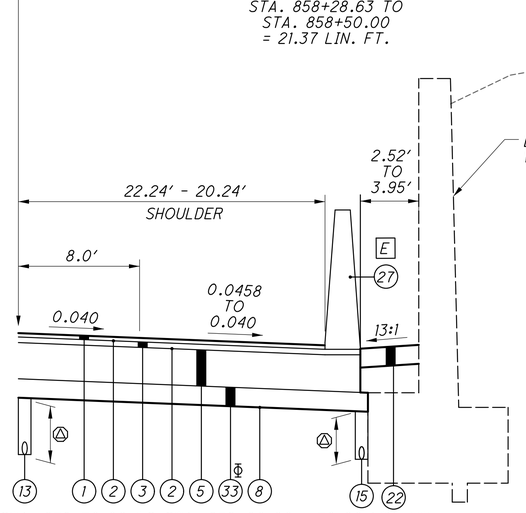

STA. 858+50.00 TO STA. 859+00.00 = 50.00 LIN. FT.

NOTE: SEE SUPERELEVATION TABLES FOR TRANSITION STATIONING AND RATES.

FOR LEGEND. SEE SHEET 17

Δ SEE UNDERDRAIN SUB-SUMMARY SHEETS FOR DEPTH AND QUANTITIES.

CROSS REFERENCES	
SHT NO	DESCRIPTION
580-587	PLAN

CALCULATED DWH
CHECKED TAZ

TRANSITIONAL PAVEMENT TYPICAL SECTIONS I-70 EB (W)
STA. 856+32.13 TO STA. 859+00.00

FRA-70-14.54

19
2317

ms consultants, inc.

PLOT.CEL

ms consultants, inc.
rmsconsultants.com

www.rmsconsultants.com

Ohio DOT Workspace
70\71 East Interchange 2E

1"
0.5"
0

Batchplot Spec: \\rmsconsultants.com\files\production\03\60\06634.2E\standards\plotdrv\batchplt.spc
Pen Table: \\rmsconsultants.com\files\Standards\ustn\ohdot\V8\rms\plotting\pen\V8i_ms_std.tbl
Plot Driver: \\rmsconsultants.com\files\Standards\ustn\ohdot\v8i\rms\plotting\PDF.pltcfg

PDF: ohdot\V8i
PDF: 60-06634_2E_Columbus

34" x 22"

View: FENCE_VIEW1
By: jbaughas

Model: Sheet
Printed: 6/19/2018 @ 7:56:03 AM
File: N:\03\60\06634.2E\roadway\sheets\1053226\1008.dgn

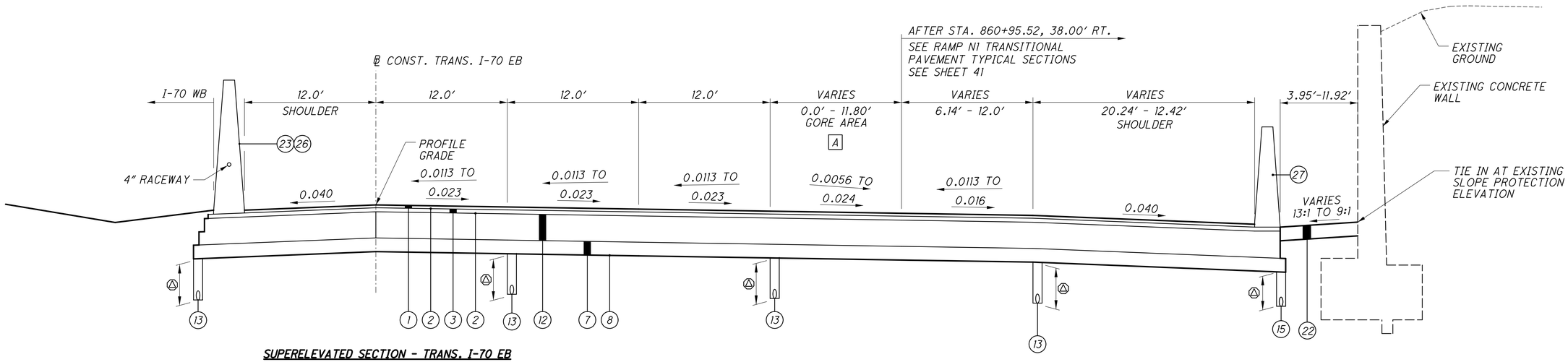

SUPERELEVATED SECTION - TRANS. I-70 EB

SECTION APPLIES:

STA. 859+00.00 TO STA. 863+99.20 = 499.20 LIN. FT.

A STA. 859+00.00 TO STA. 860+29.56 = 0.0′
STA. 860+29.56 TO STA. 863+99.20 = 0.0′ - 11.80′

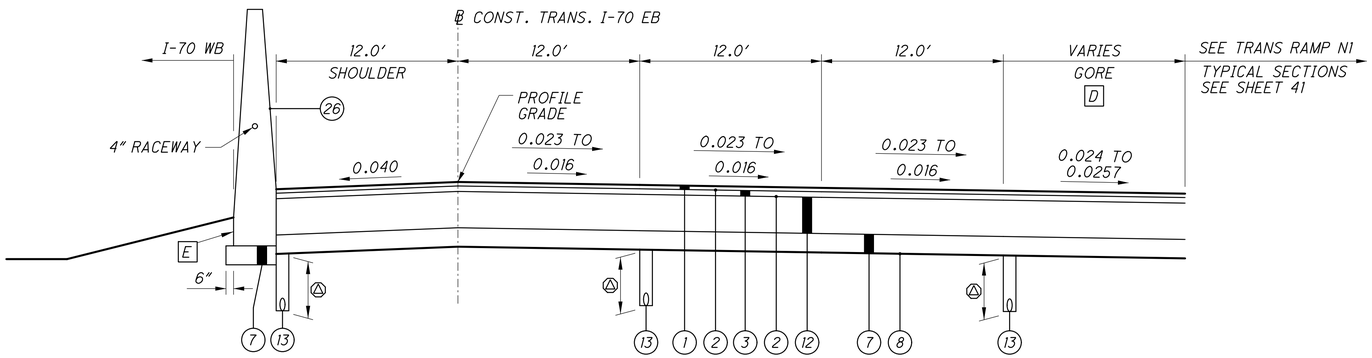

SUPERELEVATED SECTION - TRANS. I-70 EB

SECTION APPLIES:

STA. 863+99.20 TO STA. 864+52.88 = 53.68 LIN. FT.

D STA. 863+99.20 TO STA. 864+52.88 = 11.80′ - 16.30′

E USE 9″ CONCRETE FOUNDATION BASE PER SCD RM-4.3

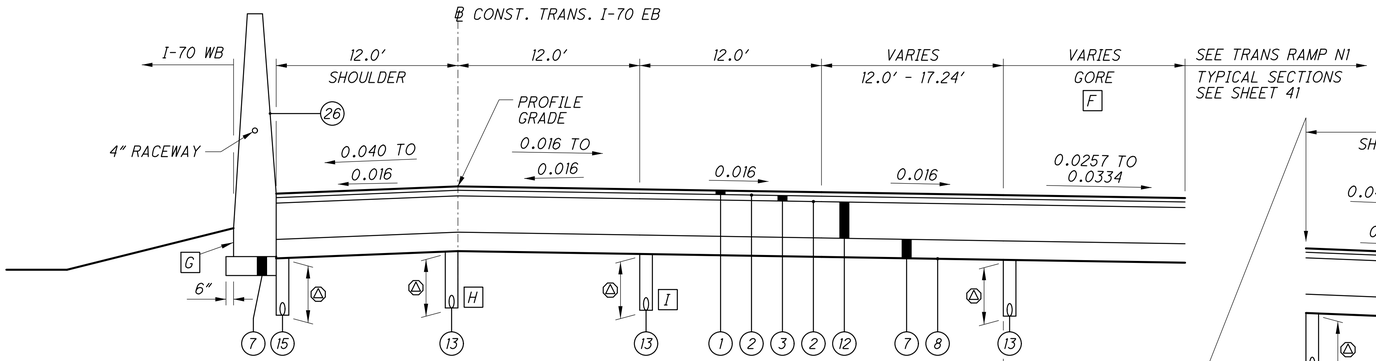

NORMAL SECTION - TRANS. I-70 EB

SECTION APPLIES:

STA. 864+52.88 TO STA. 866+98.25 = 245.37 LIN. FT.

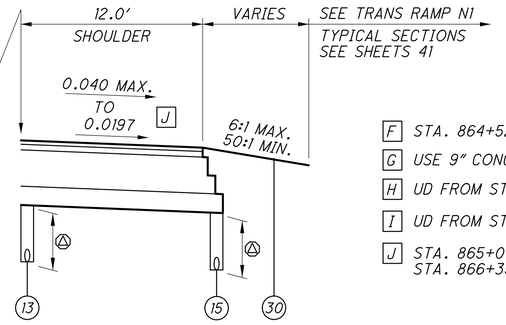

F STA. 864+52.88 TO STA. 865+01.42 = 16.30′ - 20.0′

G USE 9″ CONCRETE FOUNDATION BASE PER SCD RM-4.3

H UD FROM STA. 865+75.56 TO STA. 866+98.25

I UD FROM STA. 864+52.88 TO STA. 865+75.56

J STA. 865+01.42 TO STA. 866+35.64 = 0.040′
STA. 866+35.64 TO STA. 866+98.25 = 0.040′ TO 0.0197′

STA. 865+01.42 TO STA. 866+98.25 = 196.83 LIN. FT.

NOTE: SEE SUPERELEVATION TABLES FOR TRANSITION STATIONING AND RATES.

FOR LEGEND. SEE SHEET 17

Ⓐ SEE UNDERDRAIN SUB-SUMMARY SHEETS FOR DEPTH AND QUANTITIES.

CROSS REFERENCES	
SHT NO	DESCRIPTION
580-587	PLAN

CALCULATED DWH
CHECKED TAZ

TRANSITIONAL PAVEMENT TYPICAL SECTIONS I-70 EB
STA. 859+00.00 TO STA. 866+98.25

FRA-70-14.54

ms consultants, inc.

CROSS REFERENCES	
SHT NO	DESCRIPTION
616-652	PLAN

NOTE: SEE SUPERELEVATION TABLES FOR TRANSITION STATIONING AND RATES.

FOR LEGEND. SEE SHEET 17

(△) SEE UNDERDRAIN SUB-SUMMARY SHEETS FOR DEPTH AND QUANTITIES.

[A] STA. 769+03.60 TO STA. 769+60.03 = 14.59′
STA. 769+60.03 TO STA. 770+00.03 = 14.59′ - 13.10′
STA. 770+00.03 TO STA. 770+10.03 = 13.10′
STA. 770+10.03 TO STA. 770+50.03 = 13.10′ - 14.09′
STA. 770+50.03 TO STA. 770+89.70 = 14.09′ - 13.59′
STA. 770+89.70 TO STA. 771+84.63 = 13.59′ - 13.76′
STA. 771+84.63 TO STA. 772+24.63 = 13.76′ - 12.00′
STA. 772+24.63 TO STA. 773+33.79 = 12.00′
STA. 773+33.79 TO STA. 773+73.81 = 12.00′ - 13.82′
STA. 773+73.81 TO STA. 774+16.73 = 13.82′
STA. 774+16.73 TO STA. 774+56.73 = 13.82′ - 12.30′
STA. 774+56.73 TO STA. 774+66.72 = 12.30′
STA. 774+66.72 TO STA. 775+06.56 = 12.30′ - 13.77′

[B] STA. 766+99.84 TO STA. 768+78.24 = 0.0′
STA. 768+78.24 TO STA. 769+21.59 = 0.0′ - 2.0′
BEGIN GORE AREA AT STA. 769+21.59
STA. 769+21.59 TO STA. 772+49.28 = 2.0′ - 24.0′
END GORE AREA AT STA. 772+49.28
STA. 772+49.28 TO STA. 773+11.70 = 24.0′ - 28.37′

[C] STA. 766+99.84 TO STA. 770+09.88 = 16.0′
STA. 770+09.88 TO STA. 771+71.60 = 16.0′ - 13.98′
STA. 771+71.60 TO STA. 774+41.84 = 13.98′
STA. 774+41.84 TO STA. 775+06.56 = 13.98′ - 14.74′

[D] STA. 773+11.70 TO STA. 773+28.74 = 12.68 - 12.0′
STA. 773+28.74 TO STA. 774+32.06 = 12.0′

[E] END RETAINING WALL I-7 AT STA. 778+79.33, 65.50′ RT.

[F] STA. 769+13.00 TO STA. 772+03.00
STA. 773+56.00 TO STA. 778+86.92

[G] STA. 775+06.56 TO STA. 776+13.72 = 26.74′ - 28.0′
STA. 776+13.72 TO STA. 778+86.92 = 28.0′

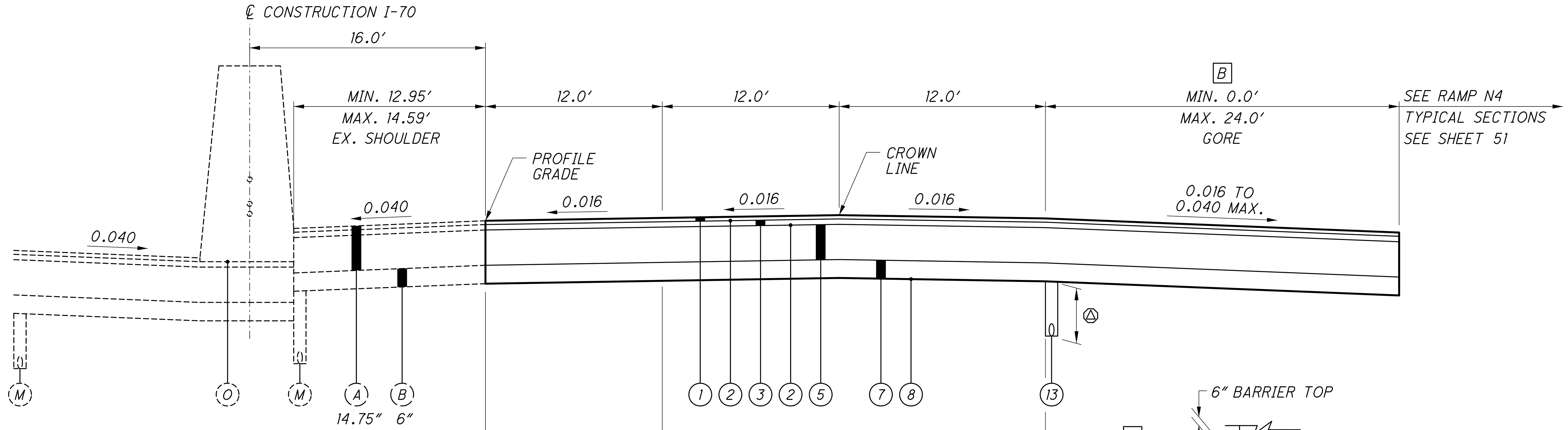

NORMAL SECTION - I-70 EB
SECTION APPLIES:
STA. 766+99.84 TO
STA. 778+86.92 = 1187.08 LIN. FT.

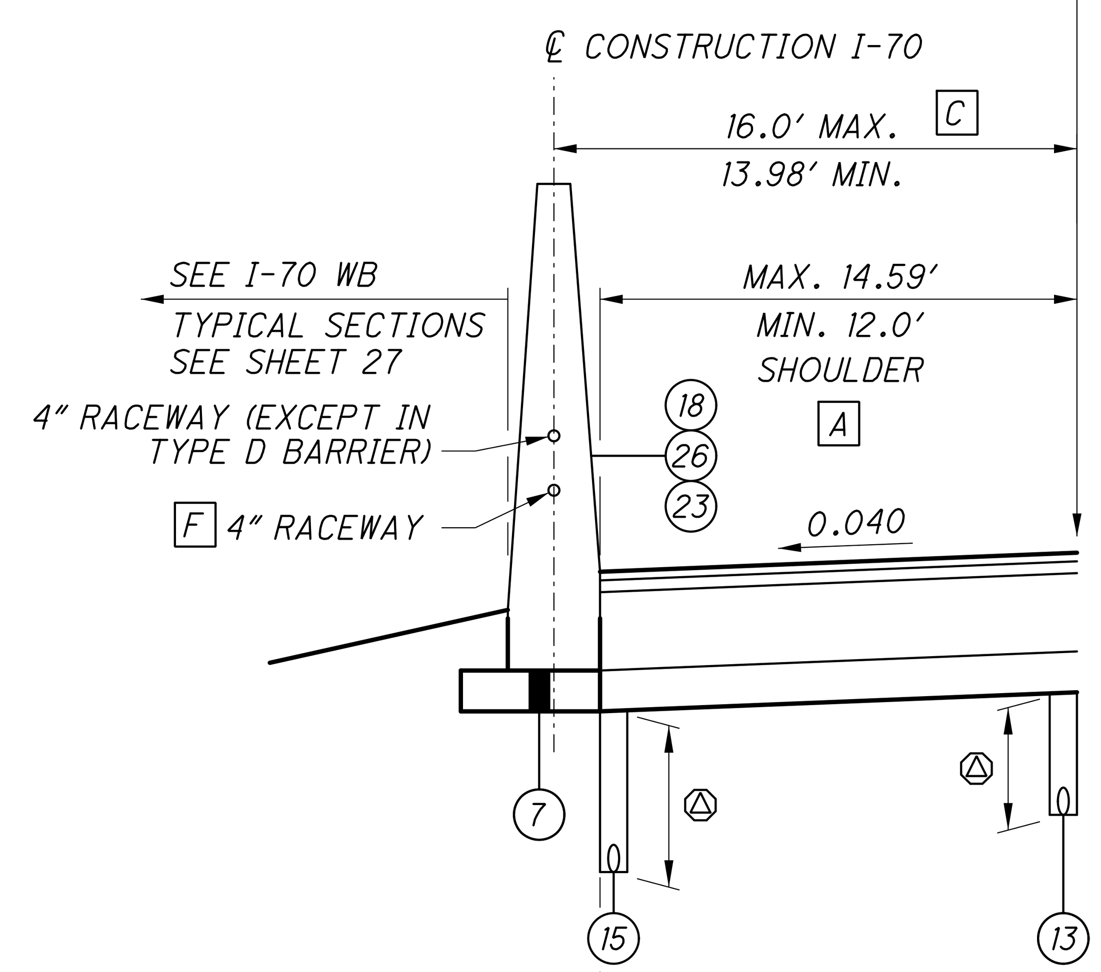

STA. 769+03.60 TO STA. 775+06.56 = 602.96 LIN. FT.

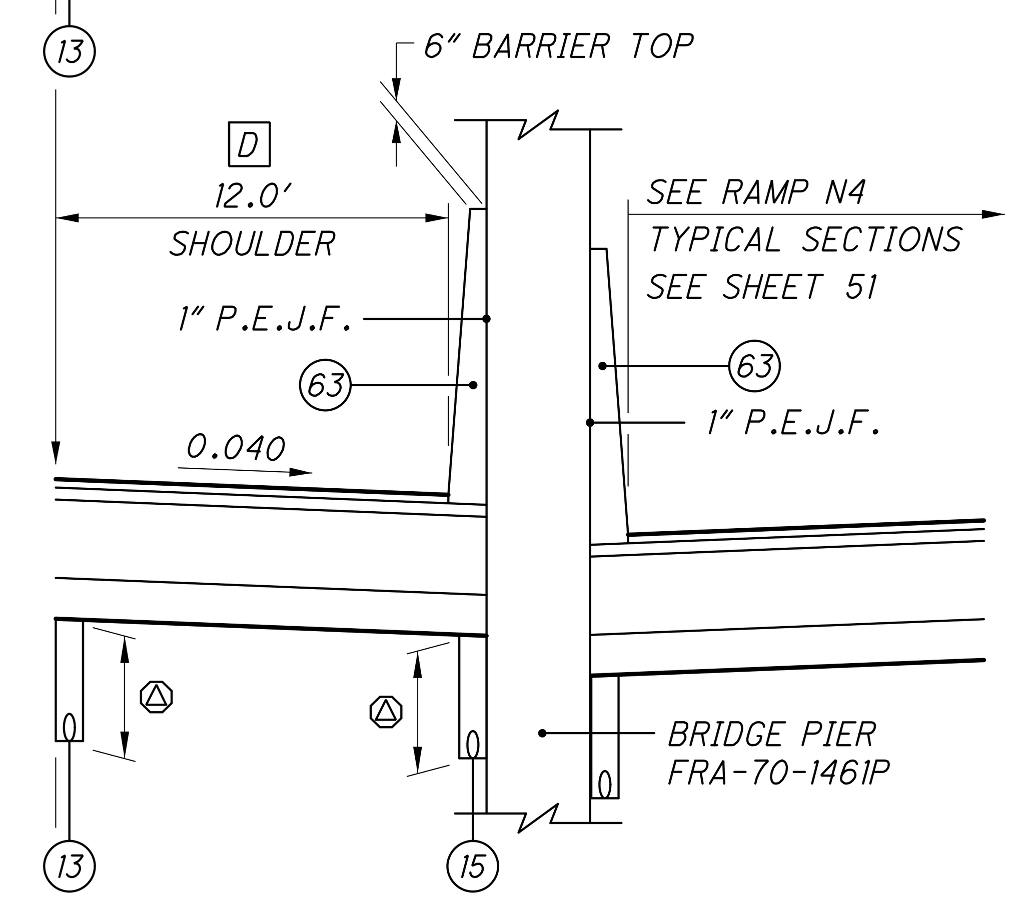

STA. 773+32.81 TO STA. 774+31.98 = 99.17 LIN. FT.

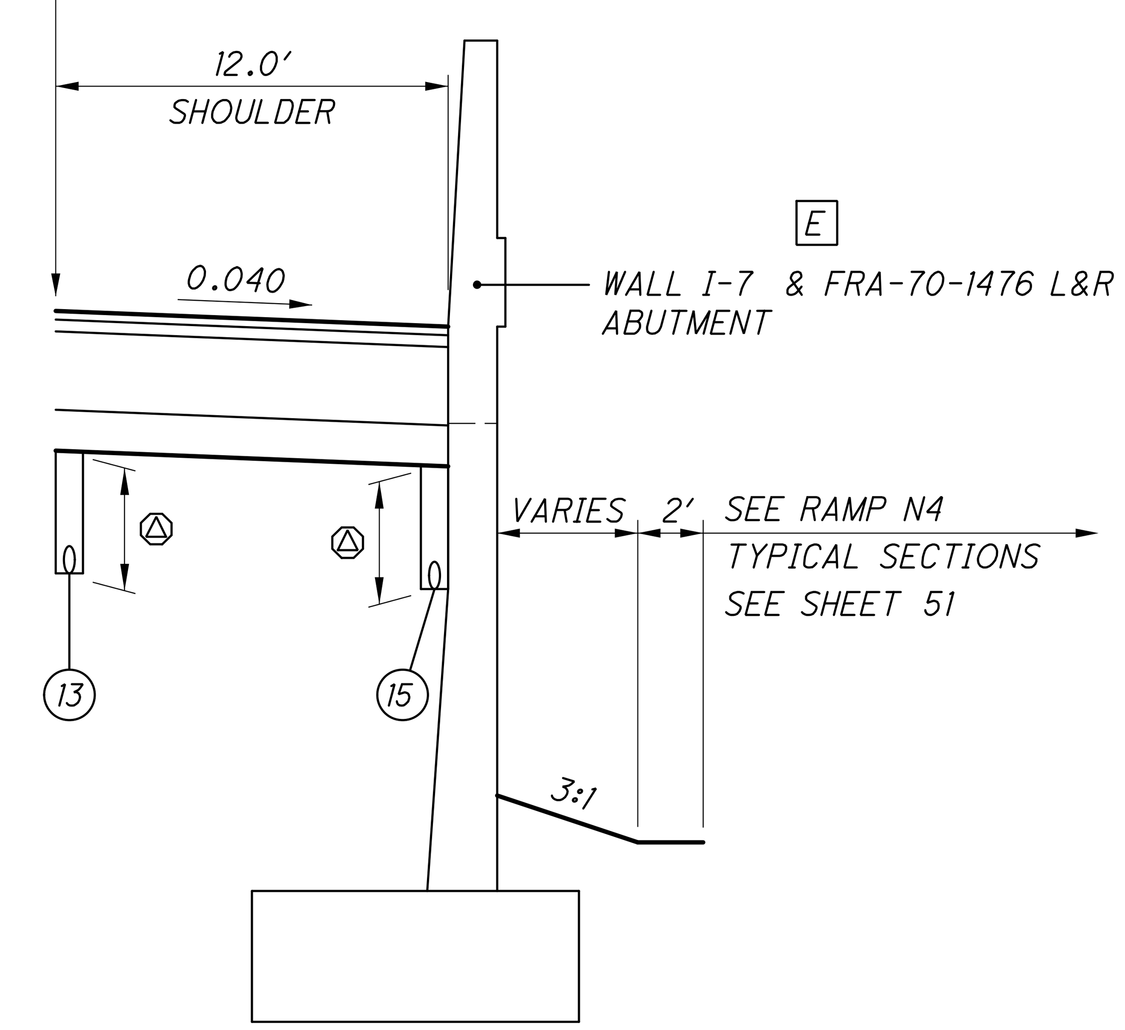

STA. 774+32.06 TO STA. 778+86.92 = 454.86 LIN. FT.

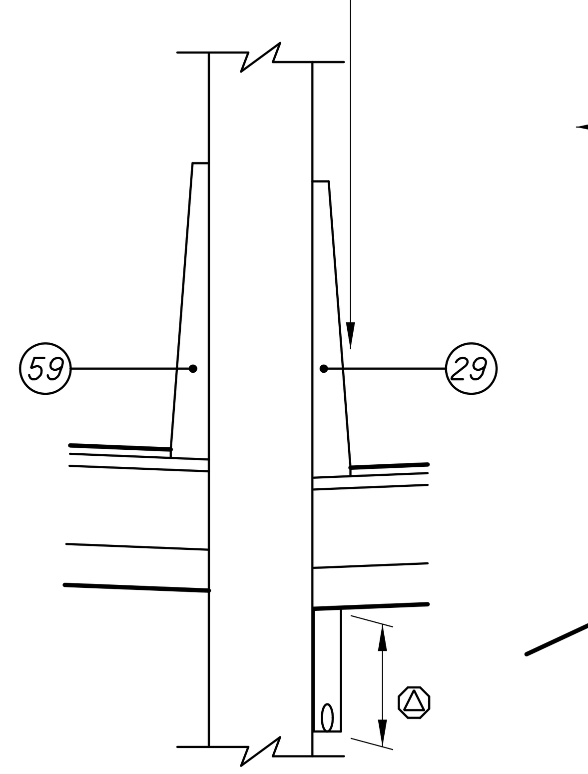

STA. 772+29.63 TO STA. 773+28.79

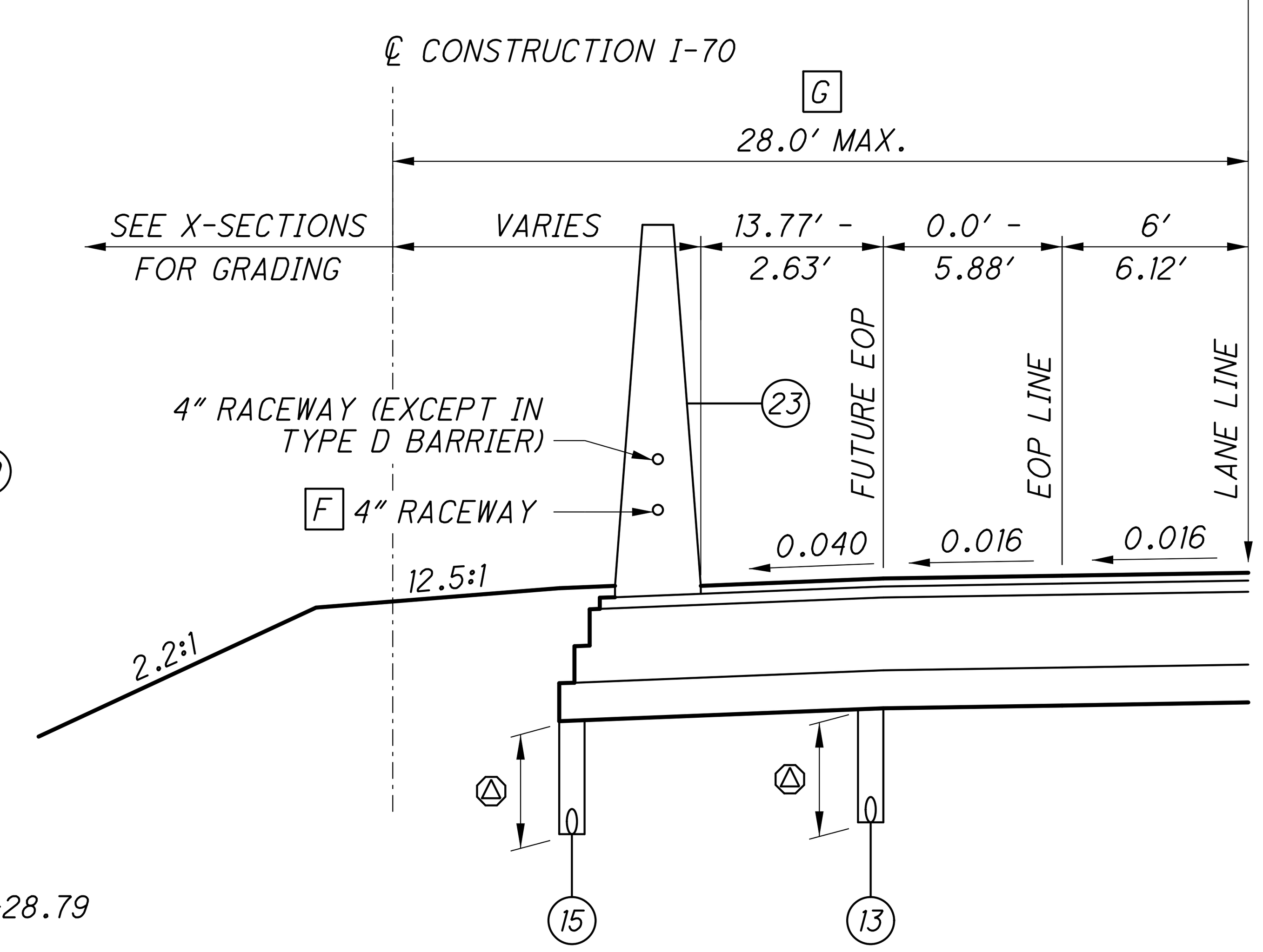

STA. 775+06.56 TO STA. 778+86.92= 380.36 LIN. FT.

TYPICAL SECTIONS - I-70 EASTBOUND
STA. 766+99.84 TO STA. 778+86.92

FRA-70-14.54

CALCULATED DWH
CHECKED TAZ

PLOT.CEL
ms consultants, inc.
msconsultants.com
www.msconsultants.com
Model: Sheet View: FENCE_VIEW1
Printed: 6/19/2018 @ 7:56:04 AM By: jdouglas
File: N:\03\60\06634_2E\roadway\sheets\105322GY013.dgn
34″ x 22″
ms consultants, inc.

PLOT.CEL

ms consultants, inc.
msconsultants.com

Ohio DOT Workspace
70\71 East Interchange 2E
PDF: ohdot\V8i
DGN: 60-06634_2E_Columbus

Batchplot Spec: \\msconsultants.com\files\production\03\60\06634_2E\standards\ohdot\batchplt.spc
Pen Table: \\msconsultants.com\files\Standards\ustn\ohdot\V8i\ms\plotting\pen\V8i_ms_std.tbl
Plot Driver: \\msconsultants.com\files\Standards\ustn\ohdot\V8i\ms\plotting\PDF.pltcfg

Model: Sheet
Printed: 6/19/2018 @ 7:56:06 AM
File: N:\03\60\06634_2E\roadway\sheets\1053226104.dgn
View: FENCE_VIEW1
By: jdouglas

34" x 22"

CROSS REFERENCES	
SHT NO	DESCRIPTION
616-652	PLAN
1799-1829	BRIDGE FRA-70-1493 L/R

NOTE: SEE SUPERELEVATION TABLES FOR TRANSITION STATIONING AND RATES.

FOR LEGEND. SEE SHEET 17

△ SEE UNDERDRAIN SUB-SUMMARY SHEETS FOR DEPTH AND QUANTITIES.

BRIDGE FRA-70-1476 L&R LIES BETWEEN STA. 781+25.71 AND STA. 783+76.48

A END UNDERDRAIN AT STA. 780+14.67

B BEGIN UNDERDRAIN AT STA. 783+26.57

F STA. 778+86.92 TO STA. 782+12.25 = 13.37' - 24.00'
STA. 782+12.25 TO STA. 783+77.11 = 24.00'
STA. 783+77.11 TO STA. 784+77.83 = 24.00' - 0.0'
STA. 784+77.83 TO STA. 787+13.90 = 0.0'

G STA. 778+86.92 TO STA. 779+67.41 = 2.63' - 0.00'
STA. 779+67.41 TO STA. 781+14.25 = 0.00'
STA. 784+14.25 TO STA. 781+77.83 = 0.00' - 14.59'
STA. 784+77.83 TO STA. 781+13.90 = 14.59' - 14.47' (SKEW)

H STA. 778+86.92 TO STA. 779+67.41 = 5.88' - 7.40'
STA. 779+67.41 TO STA. 782+12.52 = 7.40' - 4.00'
STA. 782+12.52 TO STA. 783+77.11 = 4.00'
STA. 783+77.11 TO STA. 784+14.25 = 4.00' - 11.32'
STA. 784+14.25 TO STA. 787+13.90 = 11.32' - 6.11 (SKEW)

I STA. 778+86.92 TO STA. 782+12.25

J UNDERDRAIN: STA. 778+86.92 TO STA. 779+56.93
& STA. 782+85.33 TO STA. 787+08.98

K UNDERDRAIN: STA. 785+89.21 TO STA. 786+38.43

L BEGIN UNDERDRAIN: STA. 783+37.62

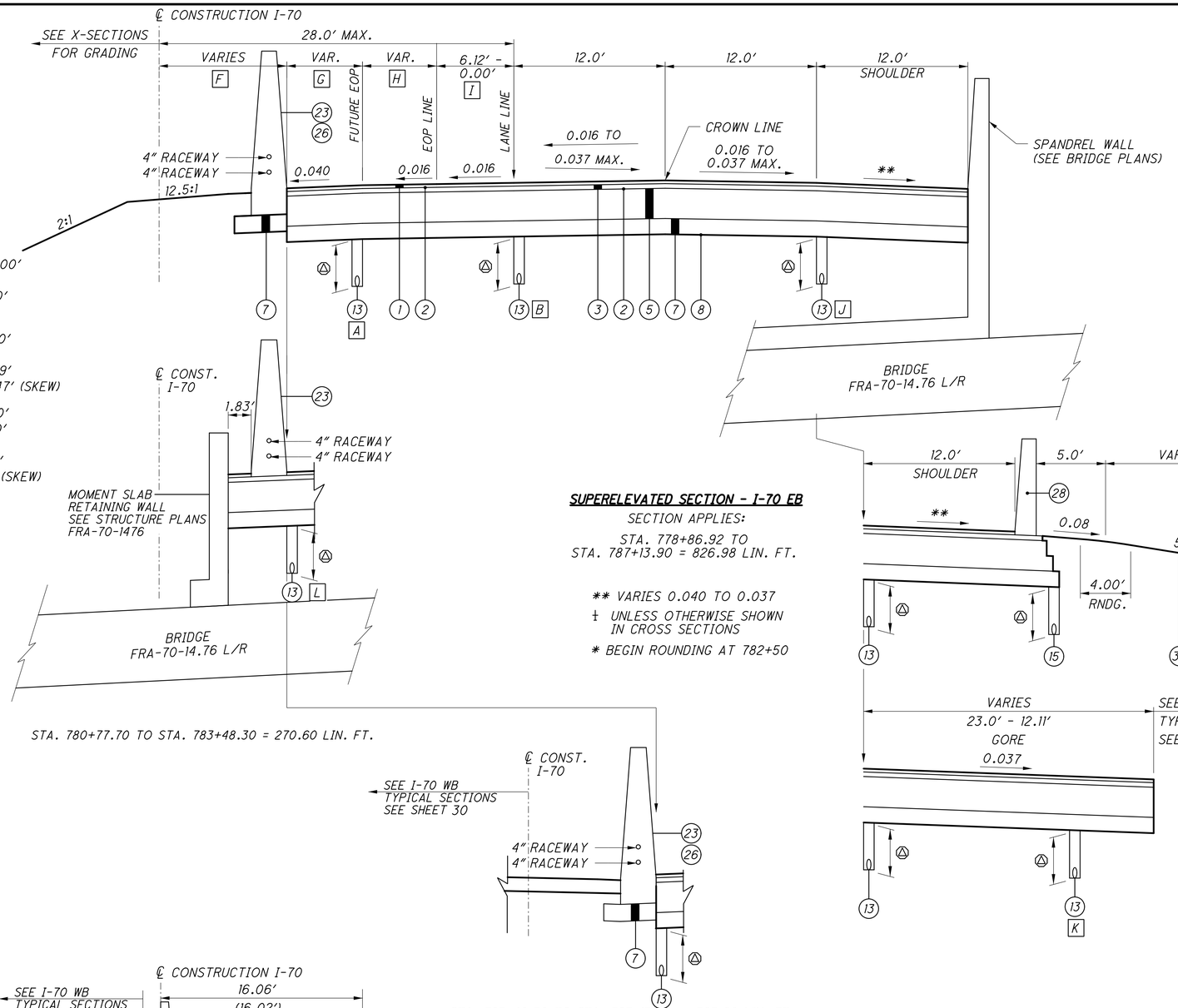

SUPERELEVATED SECTION - I-70 EB

SECTION APPLIES:

STA. 778+86.92 TO
STA. 787+13.90 = 826.98 LIN. FT.

** VARIES 0.040 TO 0.037

‡ UNLESS OTHERWISE SHOWN IN CROSS SECTIONS

* BEGIN ROUNDING AT 782+50

APPROACH SLAB SECTION - I-70 EB (SKEWED)

APPROACH SLABS: 30'-0" LONG (AS-1-81), MODIFIED SECTION APPLIES:

STA. 787+13.90 TO STA. 787+43.90 = 30.00 LIN. FT.
STA. 788+66.00 TO STA. 788+96.00 = 30.00 LIN. FT.

C DIMENSIONS SHOWN ARE MEASURED ALONG THE SKEWED LINE OF BEGIN APPROACH SLAB

△ ALL CROSS SLOPES AND 5' ROUNDING DIMENSIONS ARE PERPENDICULAR TO ℄ CONSTRUCTION I-70

CALCULATED DWH
CHECKED TAZ

TYPICAL SECTIONS - I-70 EASTBOUND
STA. 778+86.92 TO STA. 788+96.00

FRA-70-14.54

ms consultants, inc.

NOTE: SEE SUPERELEVATION TABLES FOR TRANSITION STATIONING AND RATES.

FOR LEGEND. SEE SHEET 17

(△) SEE UNDERDRAIN SUB-SUMMARY SHEETS FOR DEPTH AND QUANTITIES.

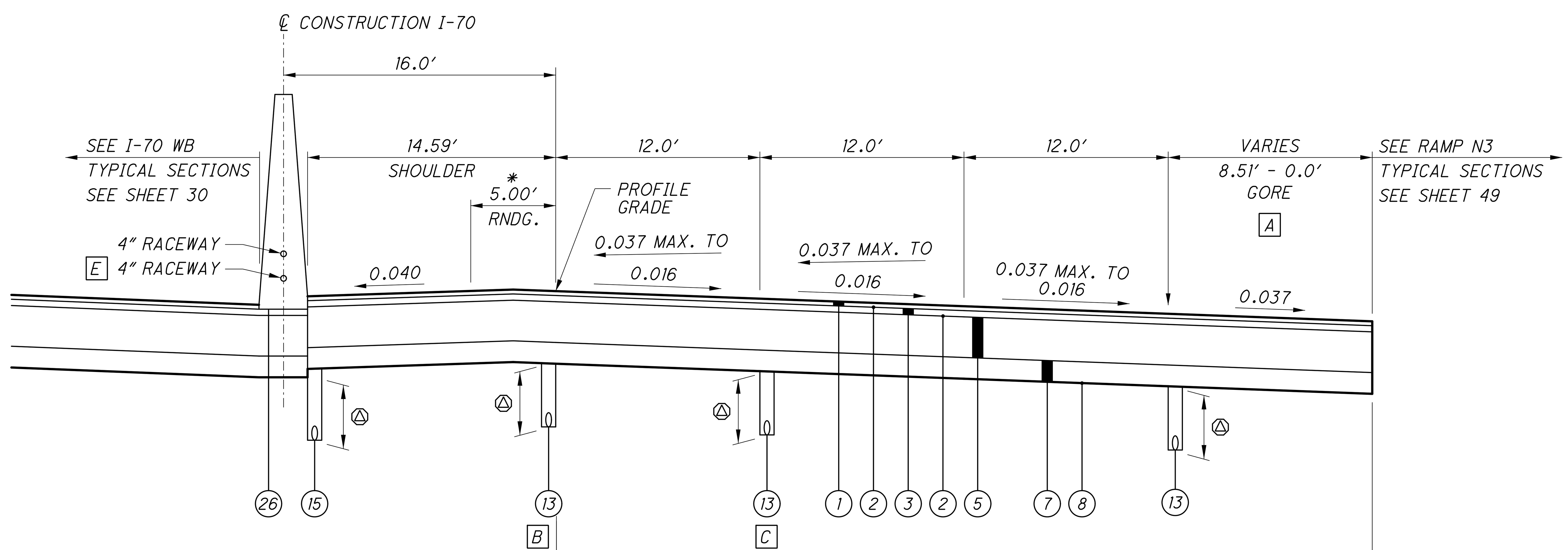

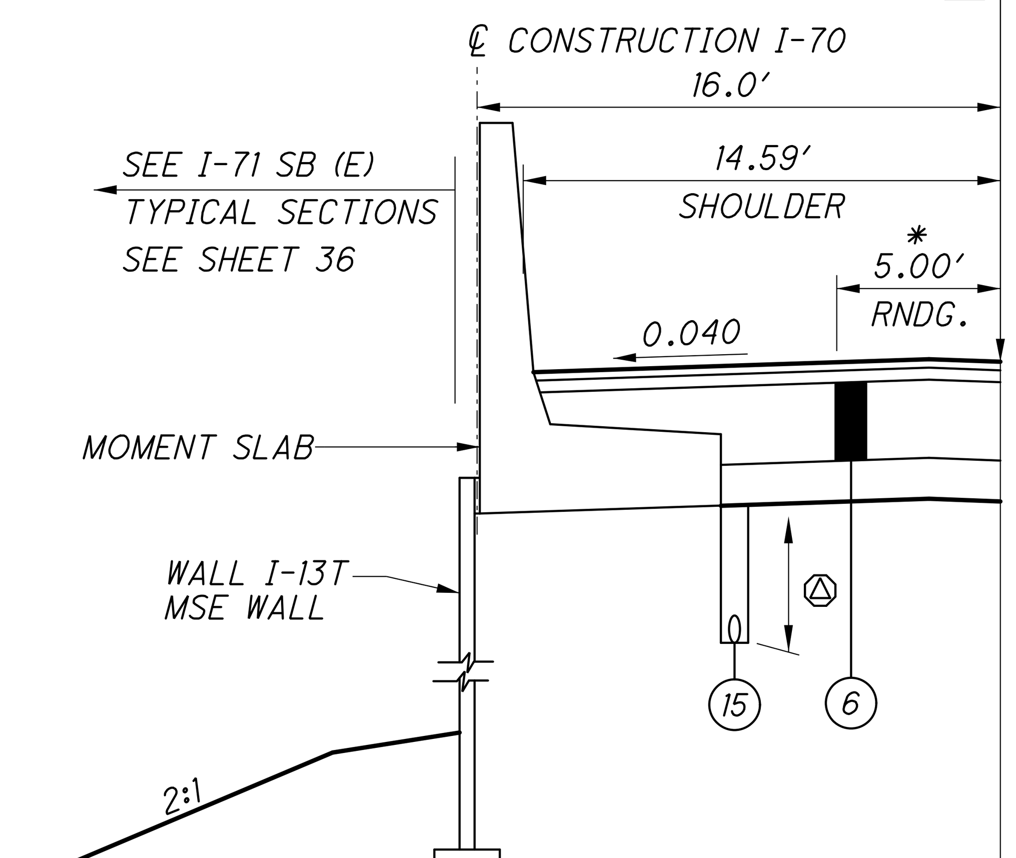

STA. 792+90.00 TO STA. 794+06.58 = 116.58 LIN. FT.

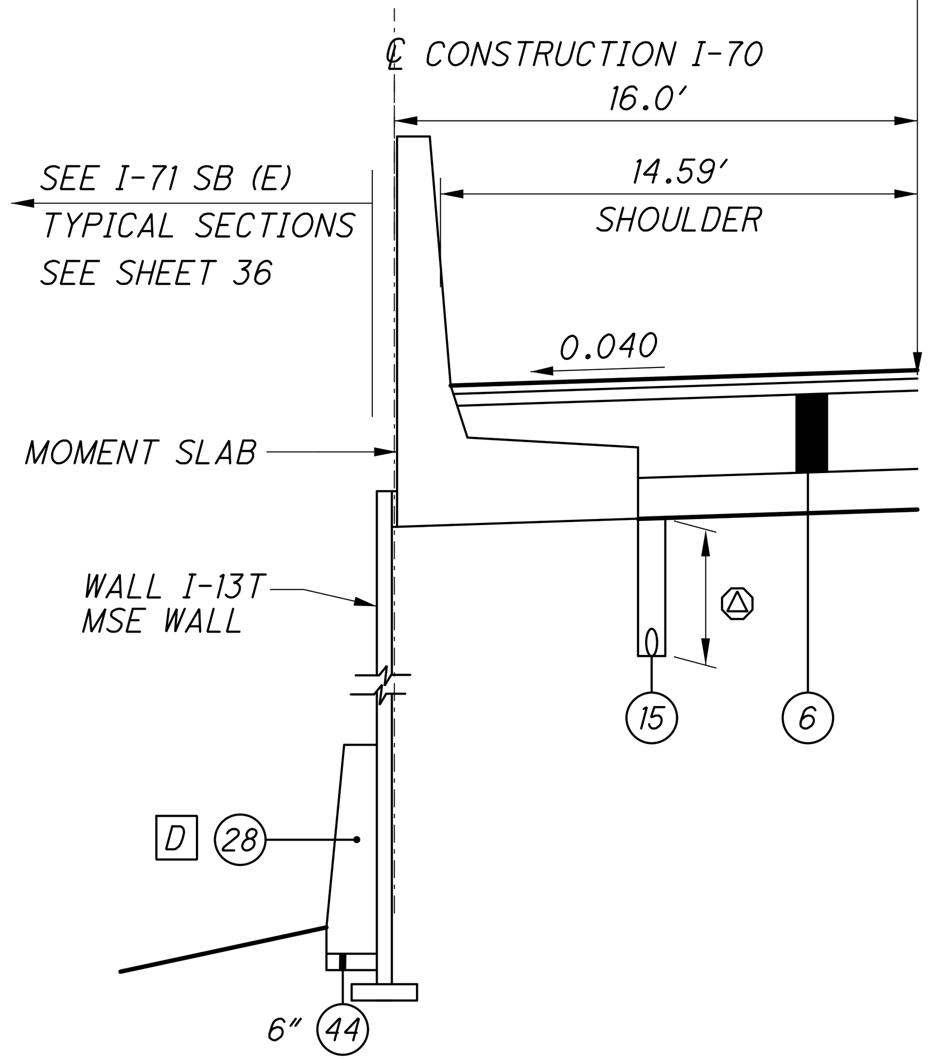

STA. 794+06.58 TO STA. 796+62.58 = 256.00 LIN. FT.

SUPERELEVATED SECTION - I-70 EB

SECTION APPLIES:

STA. 788+96.00 TO STA. 796+62.58 = 766.58 LIN. FT.

* END ROUNDING AT STA. 793+00.00

*** VARIES 0.033 TO 0.040 MAX.

‡ UNLESS OTHERWISE SHOWN IN CROSS SECTIONS

[A] STA. 788+96.00 TO STA. 792+33.00 = 8.51' - 2.0'
END GORE AREA AT STA. 792+33.00
STA. 792+33.00 TO STA. 793+23.84 = 2.0' - 0.0'
STA. 793+23.84 TO STA. 796+62.58 = 0.0'

[B] UNDERDRAIN FROM STA. 795+34.60 TO STA. 788+95.54

[C] UNDERDRAIN FROM STA. 788+95.54 TO STA. 795+34.60

[D] STA. 794+89.68 TO STA. 796+62.58

[E] STA. 788+96.00 TO STA. 792+85.00

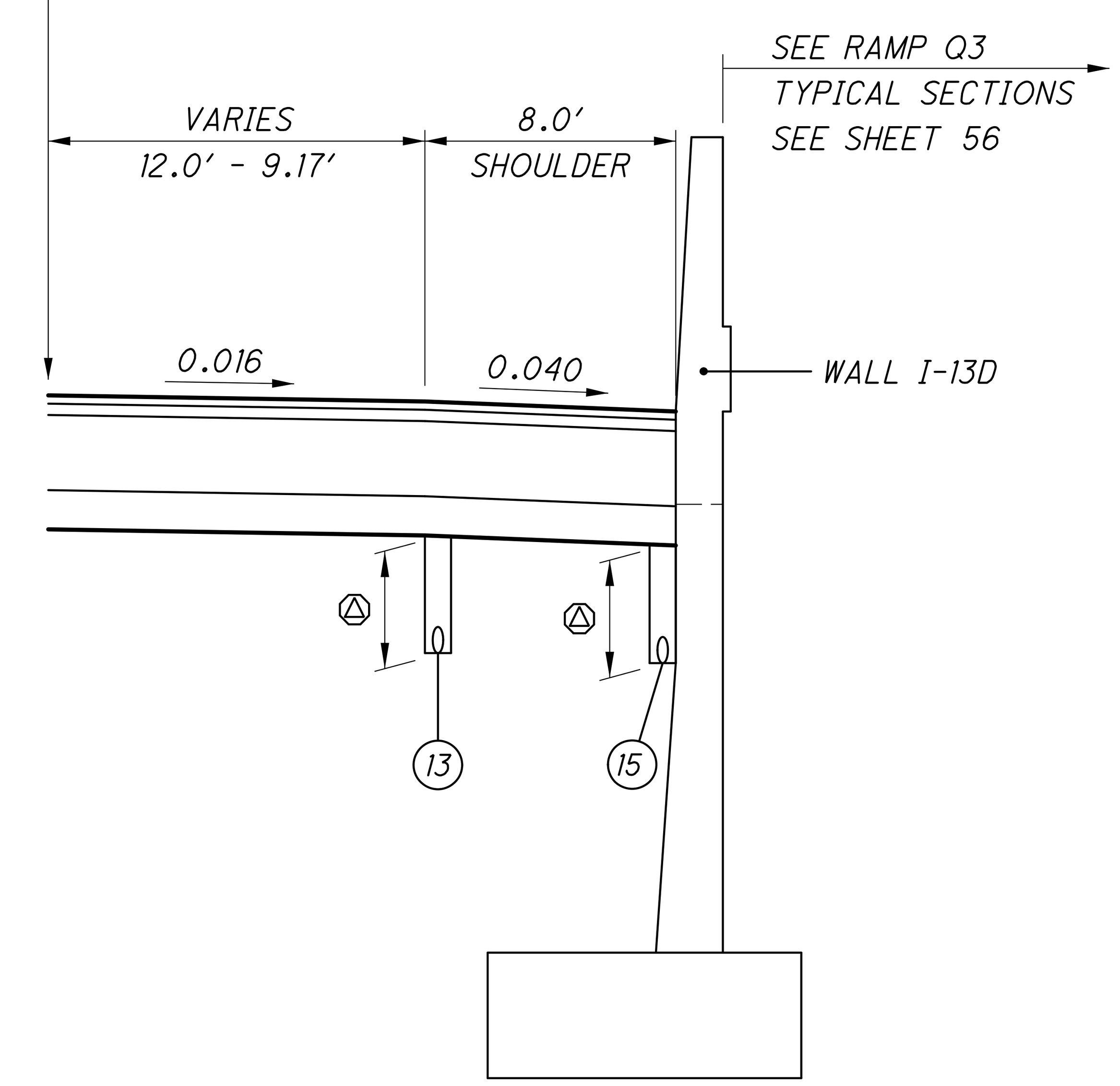

STA. 795+21.22 TO STA. 796+62.58 = 141.36 LIN. FT.

CROSS REFERENCES	
SHT NO	DESCRIPTION
616-652	PLAN

CALCULATED DWH | CHECKED TAZ

TYPICAL SECTIONS - I-70 EASTBOUND
STA. 788+96.00 TO STA. 796+62.58

FRA-70-14.54

PLOT.CEL
ms consultants, inc.
msconsultants.com
www.msconsultants.com
34" x 22"
Model: Sheet
Printed: 6/19/2018 @ 7:56:08 AM
View: FENCE_VIEW1
By: jdouglas
ms consultants, inc.

NOTE: SEE SUPERELEVATION TABLES FOR TRANSITION STATIONING AND RATES.

FOR LEGEND. SEE SHEET 17

(A) SEE UNDERDRAIN SUB-SUMMARY SHEETS FOR DEPTH AND QUANTITIES.

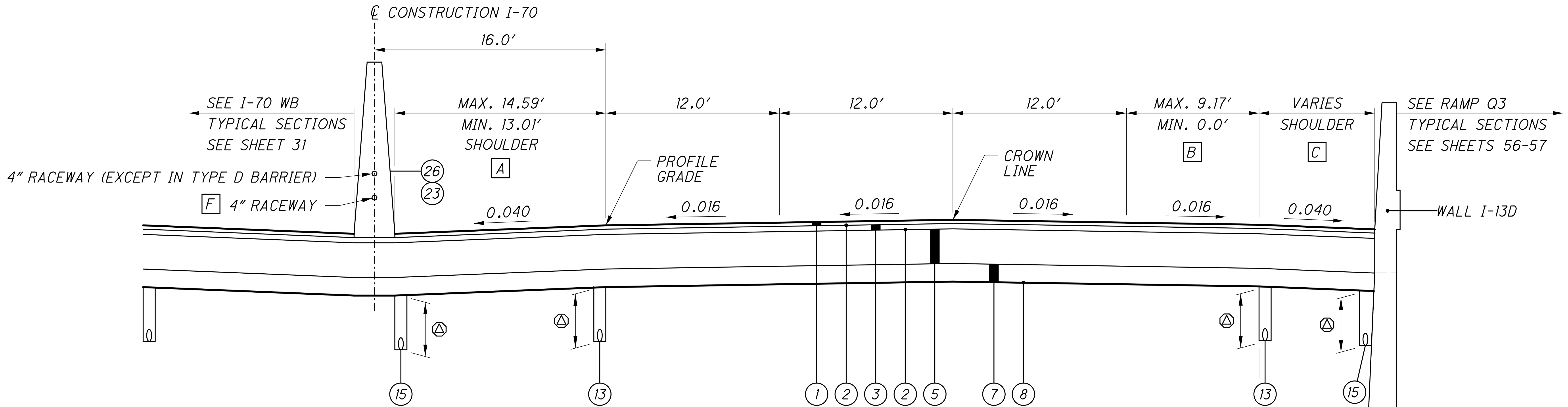

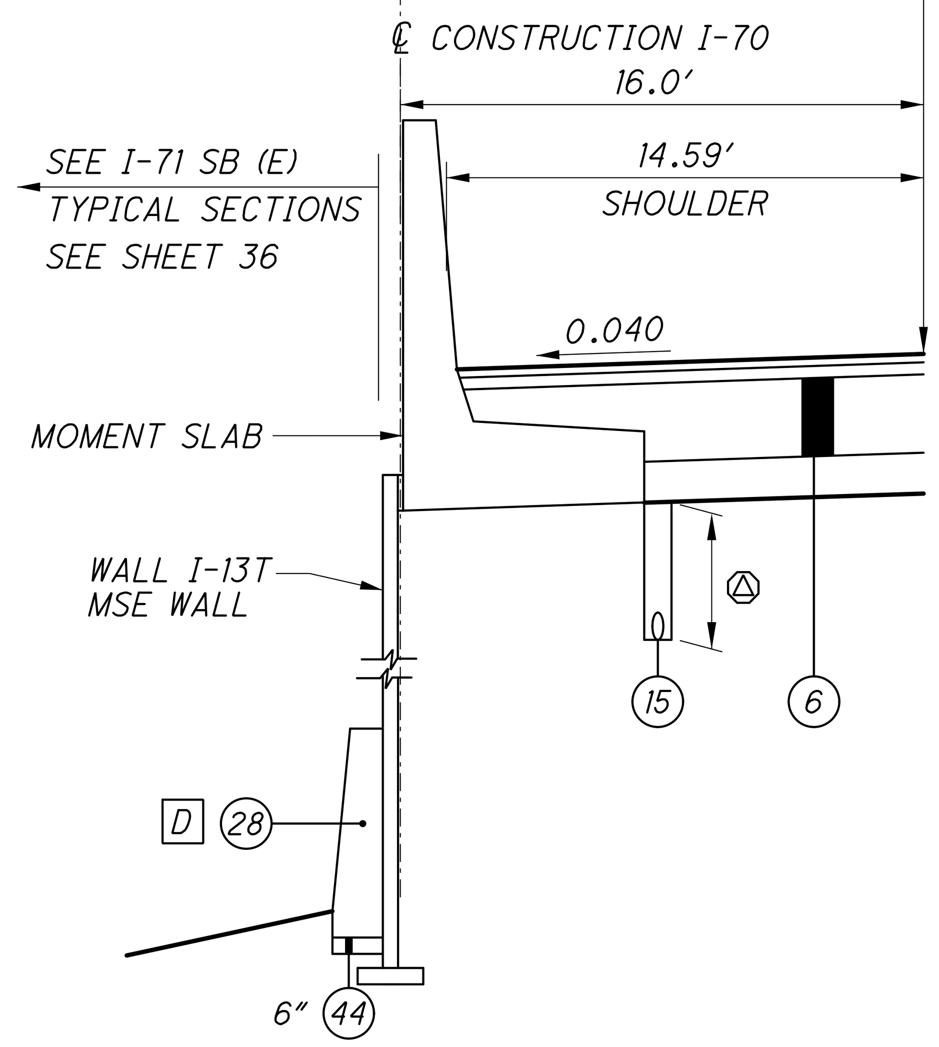

STA. 796+62.58 TO STA. 799+30.00 = 267.42 LIN. FT.

NORMAL SECTION - I-70 EB

SECTION APPLIES:

STA. 796+62.58 TO STA. 807+35.02 = 1,072.44 LIN. FT.

A STA. 796+62.58 TO STA. 798+00.54 = 14.59'
STA. 798+00.54 TO STA. 798+40.54 = 14.59' - 13.10'
STA. 798+40.54 TO STA. 798+50.54 = 13.10'
STA. 798+50.54 TO STA. 798+90.54 = 13.10' - 14.59'
STA. 798+90.54 TO STA. 801+36.99 = 14.59'
STA. 801+36.99 TO STA. 801+76.99 = 14.59' - 13.10'
STA. 801+76.99 TO STA. 801+86.99 = 13.10'
STA. 801+86.99 TO STA. 802+26.99 = 13.10' - 14.59'
STA. 802+26.99 TO STA. 803+93.03 = 14.59'
STA. 803+93.03 TO STA. 804+33.03 = 14.59' - 13.01'
STA. 804+33.03 TO STA. 805+01.33 = 13.01'
STA. 805+01.33 TO STA. 805+49.79 = 13.01' - 13.09'
STA. 805+49.79 TO STA. 805+89.80 = 13.09' - 14.59'
STA. 805+89.80 TO STA. 807+35.02 = 14.59'

B STA. 796+62.58 TO STA. 801+22.15 = 9.17' - 0.0'
STA. 801+22.15 TO STA. 807+35.02 = 0.0'

C STA. 796+62.58 TO STA. 799+18.30 = 8.0'
STA. 799+18.30 TO STA. 800+65.42 = 8.0' - 10.43'

D END TYPE C BARRIER AT STA. 801+25.00, 63.62' RT.

E END UNDERDRAIN AT STA. 804+95.87

F STA. 799+57.00 TO STA. 803+63.00
STA. 805+60.00 TO STA. 807+25.00

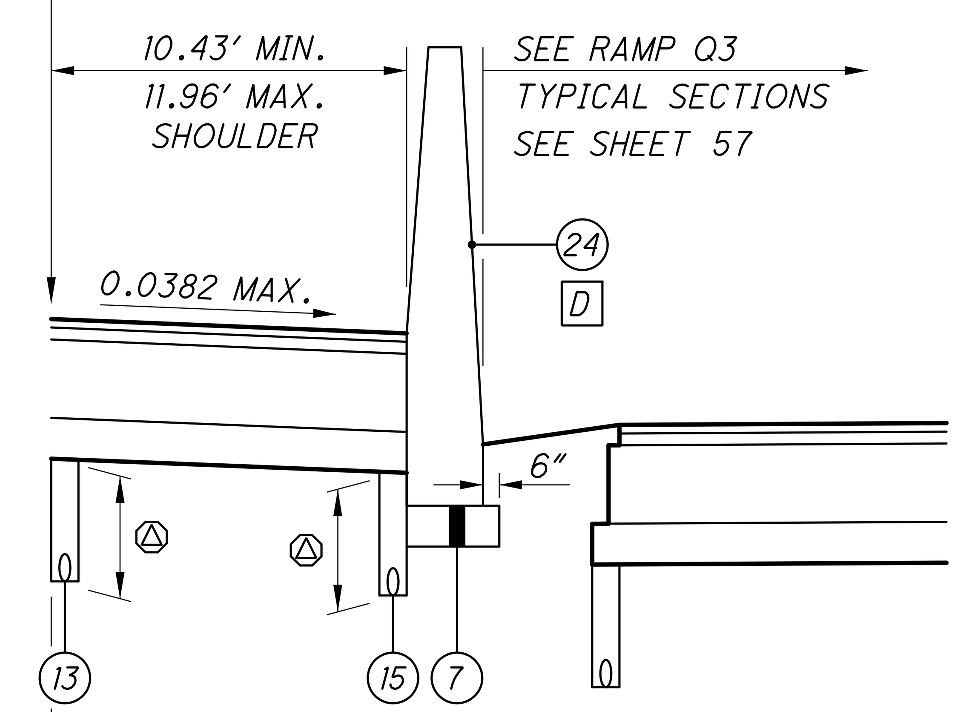

STA. 800+65.42 TO STA. 801+43.22 = 77.80 LIN. FT.

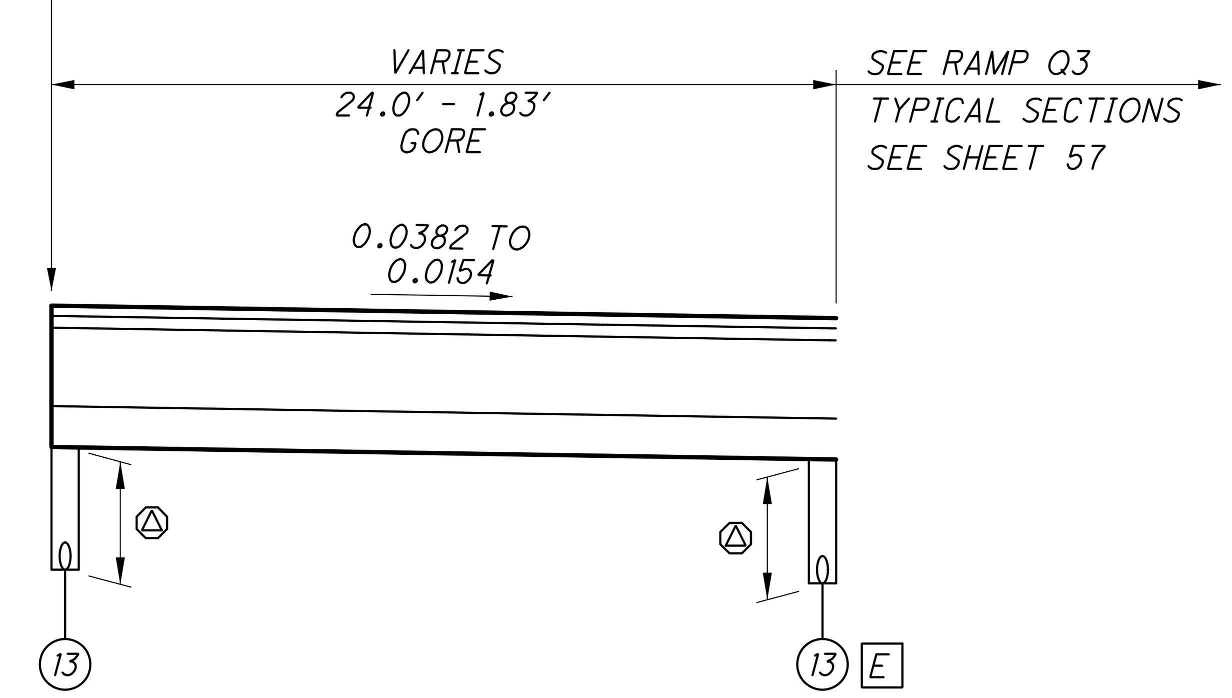

STA. 801+43.22 TO STA. 807+35.02 = 591.80 LIN. FT.

CROSS REFERENCES	
SHT NO	DESCRIPTION
616-652	I-70 EB PLAN SHEETS

TYPICAL SECTIONS - I-70 EASTBOUND
STA. 796+62.58 TO STA. 807+35.02

FRA-70-14.54

CALCULATED DWH CHECKED TAZ

ms consultants, inc. msconsultants.com
www.msconsultants.com
Model: Sheet Printed: 6/19/2018 @ 7:56:10 AM View: FENCE_VIEW1 By: jdouglas
File: N:\03\60\06634_2E\roadway\sheets\105322GY016.dgn
34" x 22"
ms consultants, inc.

PLOT.CEL
ms consultants, inc.
msconsultants.com
Ohio DOT Workspace
70\71 East Interchange 2E
www.msconsultants.com
Batchplot Spec: \\msconsultants.com\files\production\03\60\06634_2E\standards\plotdrv\batchplt.spc
Pen Table: \\msconsultants.com\files\Standards\ustn\ohdot\V8i\ms\plotting\pen\V8i_ms_std.tbl
Plot Driver: \\msconsultants.com\files\Standards\ustn\ohdot\v8i\ms\plotting\PDF.pltcfg
34" x 22"
Model: Sheet
Printed: 6/19/2018 @ 7:56:11 AM
File: N:\03\60\06634_2E\roadway\sheets\105322GY018.dgn
View: FENCE_VIEW1
By: jdouglas

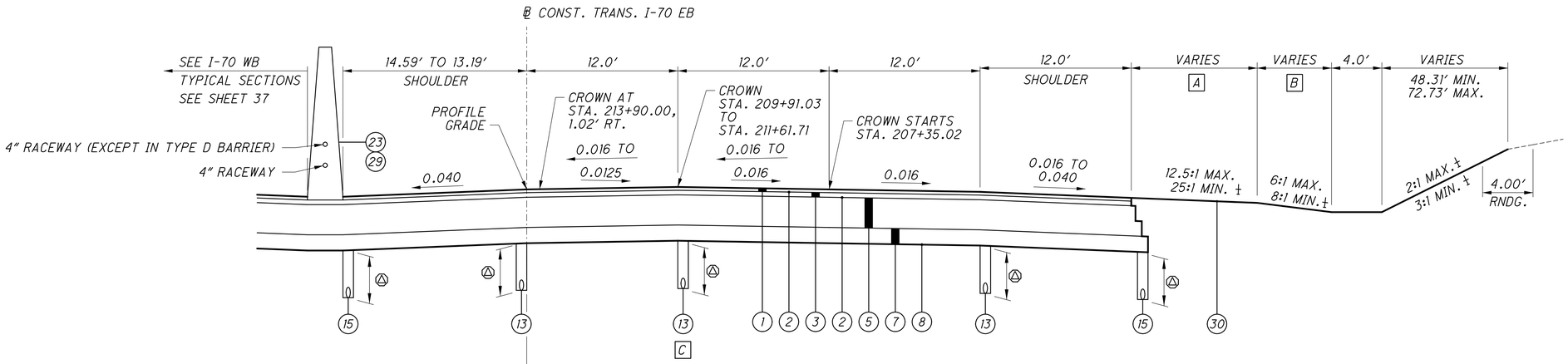

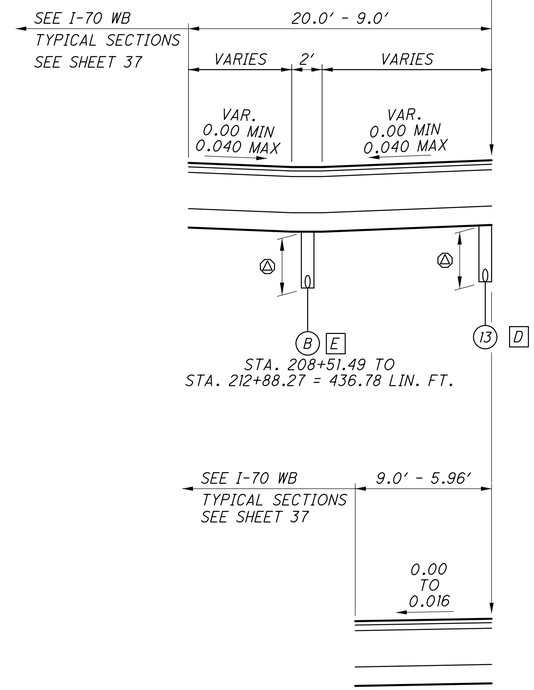

REVERSE CROWN SECTION - TRANS. I-70 EB

SECTION APPLIES:

STA. 207+35.02 TO STA. 213+90.00 = 654.98 LIN. FT.

‡ UNLESS OTHERWISE SHOWN IN CROSS SECTIONS

A STA. 207+35.02 TO STA. 207+50.00 = 11.67' - 10.0'
STA. 207+50.00 TO STA. 208+50.00 = 10.00' - 10.14'
STA. 208+50.00 TO STA. 210+00.00 = 10.14' - 5.0'
STA. 210+00.00 TO STA. 214+00.00 = 5.0'

B STA. 207+35.02 TO STA. 207+50.00 = 6.08' - 7.57'
STA. 207+50.00 TO STA. 208+00.00 = 7.57' - 7.0'
STA. 208+00.00 TO STA. 208+50.00 = 7.0'
STA. 208+50.00 TO STA. 210+00.00 = 7.0' - 9.77'
STA. 210+00.00 TO STA. 211+50.00 = 9.77' - 9.0'
STA. 211+50.00 TO STA. 214+00.00 = 9.0'

C BEGIN UNDERDRAIN AT STA. 212+88.27

D STA. 207+35.02 TO STA. 210+56.81

E STA. 208+51.49 TO STA. 212+73.73

NOTE: SEE SUPERELEVATION TABLES FOR TRANSITION STATIONING AND RATES.

FOR LEGEND. SEE SHEET 17

△ SEE UNDERDRAIN SUB-SUMMARY SHEETS FOR DEPTH AND QUANTITIES.

CROSS REFERENCES	
SHT NO	DESCRIPTION
616-652	PLAN

CALCULATED
CHECKED

TRANSITIONAL PAVEMENT TYPICAL SECTIONS I-70 EB
STA. 207+35.02 TO STA. 213+90.00

FRA-70-14.54

ms consultants, inc.

PLOT.CEL

ms consultants, inc.
msconsultants.com

Ohio DOT Workspace
70\71 East Interchange 2E
www.msconsultants.com

1"
0.5"
0

ODF: ohdot\V8i
PCF: 60-06634_2E_Columbus

Batchplot Spec: \\msconsultants.com\files\production\03\60\06634_2E\standards\plotdrv\batchplt.spc
Pen Table: I:\temp\DWH\V8_ms_std.tbl
Plot Driver: \\msconsultants.com\files\Standards\ustn\ohdot\v8i\ms\plotting\PDF.pltcfg

Model: Sheet
Printed: 7/23/2018 @ 11:38:44 AM
File: N:\03\60\06634_2E\roadway\sheets\105322GY08A.dgn

View: FENCE_VIEW1
By: dholl

34" x 22"

A STA. 213+90.00 TO STA. 217+60.74 = 5.96′ - 0.00′
STA. 217+60.74 TO STA. 218+86.84 = 0.00′

B STA. 213+90.00 TO STA. 214+17.71 = 12.00′
STA. 214+17.71 TO STA. 215+89.58 = 12.00′ - 11.00′
STA. 215+89.58 TO STA. 218+86.84 = 11.00′

C STA. 213+90.00 TO STA. 214+17.71 = 12.00′
STA. 214+17.71 TO STA. 217+06.45 = 12.00′ - 4.00′

D END PROPOSED CURB AND 2.00′ SAWCUT AT STA. 217+16.45

E END PROPOSED TYPE C1 BARRIER:
STA. 218+78.17, 27.50′ LT.

F END UNDERDRAIN AT STA. 216+36.01

G STA. 213+90.00 TO STA. 214+17.71 = 1.02′ - 0.00′
STA. 214+17.71 TO STA. 218+86.84 = 0.00′

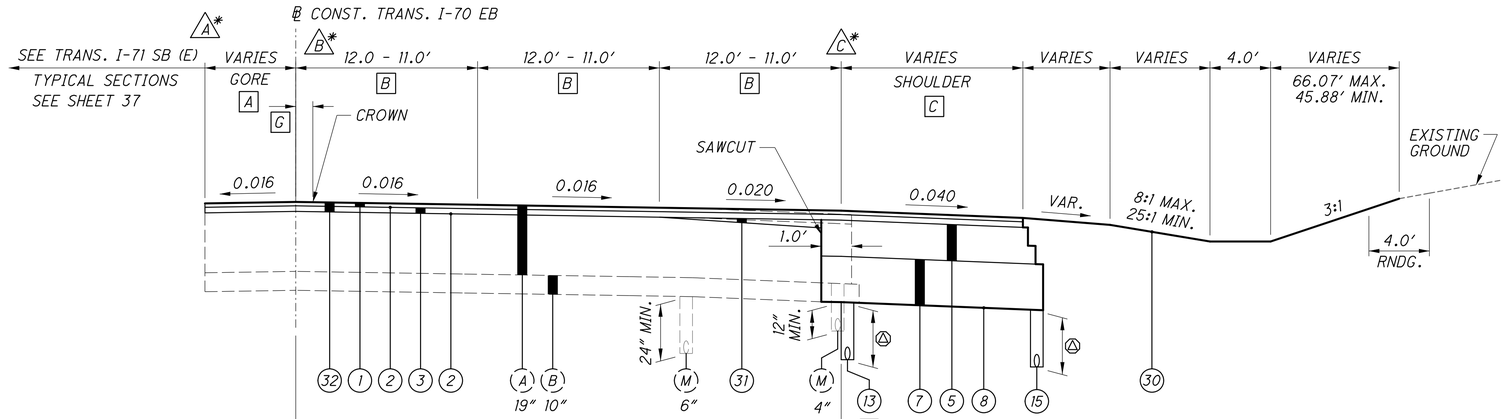

NORMAL SECTION - TRANS. I-70 EB

SECTION APPLIES:

STA. 213+90.00 TO STA. 218+86.84 = 496.84 LIN. FT.

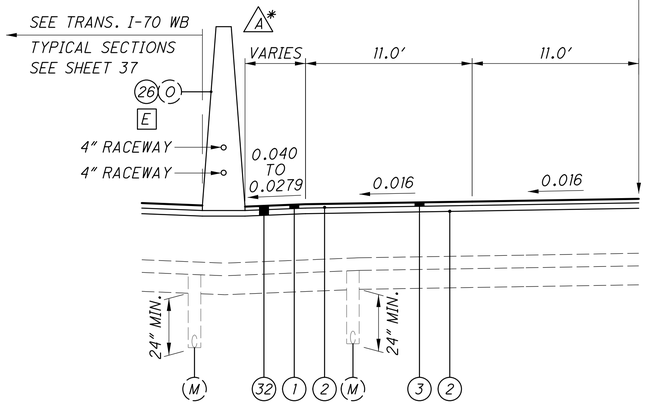

STA. 217+60.74 TO
STA. 218+86.84 = 126.10 LIN. FT.

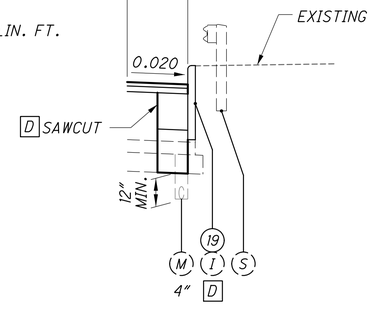

STA. 217+06.45 TO
STA. 218+86.84 = 180.39 LIN. FT.

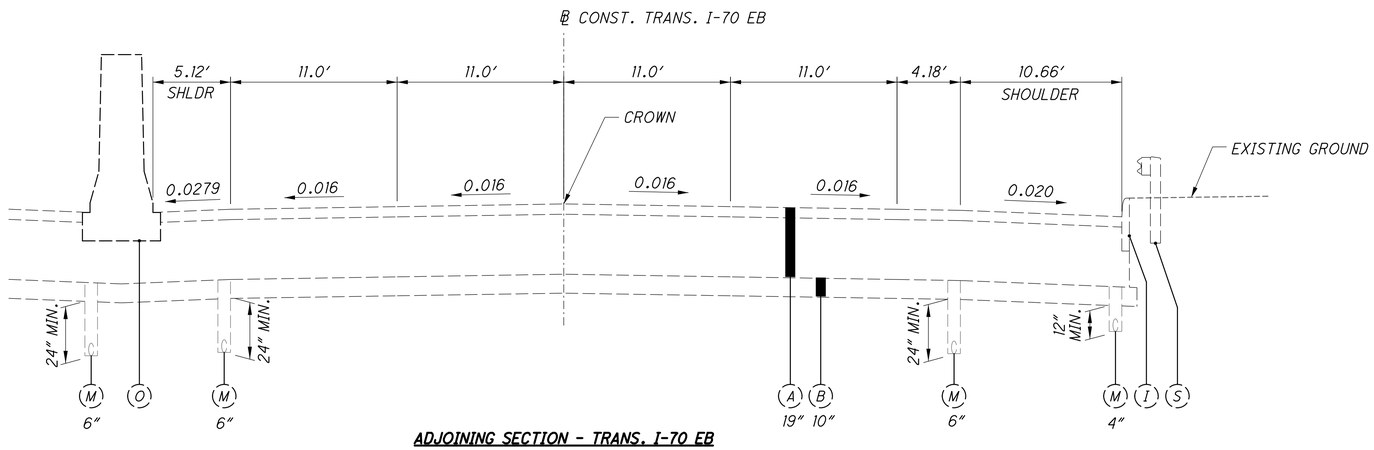

ADJOINING SECTION - TRANS. I-70 EB

SECTION APPLIES:

STA. 218+86.84

* MILLING DEPTH/LEVELING COURSE CHART

STA.	A*	B*	C*
213+90.00	+0.02′	-0.01′	+0.23′
214+00.00	-0.02′	-0.01′	+0.20′
214+50.00	-0.11′	-0.14′	-0.02′
215+00.00	-0.20′	-0.19′	-0.05′
215+50.00	-0.27′	-0.26′	-0.16′
216+00.00	-0.32′	-0.32′	-0.24′
216+50.00	-0.36′	-0.36′	-0.28′
217+00.00	-0.36′	-0.36′	-0.37′
217+50.00	-0.37′	-0.37′	-0.32′
218+00.00	-0.25′	-0.34′	-0.23′
218+50.00	-0.23′	-0.30′	-0.19′

(+) = VAR. DEPTH ASPHAULT CONC. (31)
(-) = MILLING DEPTH

NOTE: SEE SUPERELEVATION TABLES FOR TRANSITION STATIONING AND RATES.

FOR LEGEND. SEE SHEET 17

△ SEE UNDERDRAIN SUB-SUMMARY SHEETS FOR DEPTH AND QUANTITIES.

CROSS REFERENCES

SHT NO	DESCRIPTION
616-652	PLAN

CALCULATED DWH
CHECKED TAZ

TRANSITIONAL PAVEMENT TYPICAL SECTIONS I-70 EB
STA. 213+90.00 TO STA. 218+87.13

FRA-70-14.54

ms consultants, inc.

PLOT.CEL

ms consultants, inc.
msconsultants.com

Ohio DOT Workspace
70\71 East Interchange 2E
www.msconsultants.com

1"
0.5"
0

ODF: ohdot\V8i
PCF: 60-06634_2E_Columbus

Batchplot Spec: \\msconsultants.com\files\production\03\60\06634_2E\standards\plotdr\batchplt.spc
Pen Table: N:\03\60\06634_2E\standards\tables\V8i_ms_std_06634_2D_Plan View.tbl
Plot Driver: \\msconsultants.com\files\Standards\ustn\ohdot\v8i\ms\plotting\PDF.pltclg

Model: Sheet 1
Printed: 6/19/2018 @ 7:56:14 AM
File: N:\03\60\06634_2E\roadway\sheets\Sheets from 2LMN\77370_GY00112LMN.dgn

View: FENCE_VIEW1
By: jdouglas

34" x 22"

NOTE: SEE SUPERELEVATION TABLES FOR TRANSITION STATING AND RATES.

FOR LEGEND SEE SHEET 17

△ SEE UNDERDRAIN SUB-SUMMARY SHEETS FOR DEPTH AND QUANTITIES.

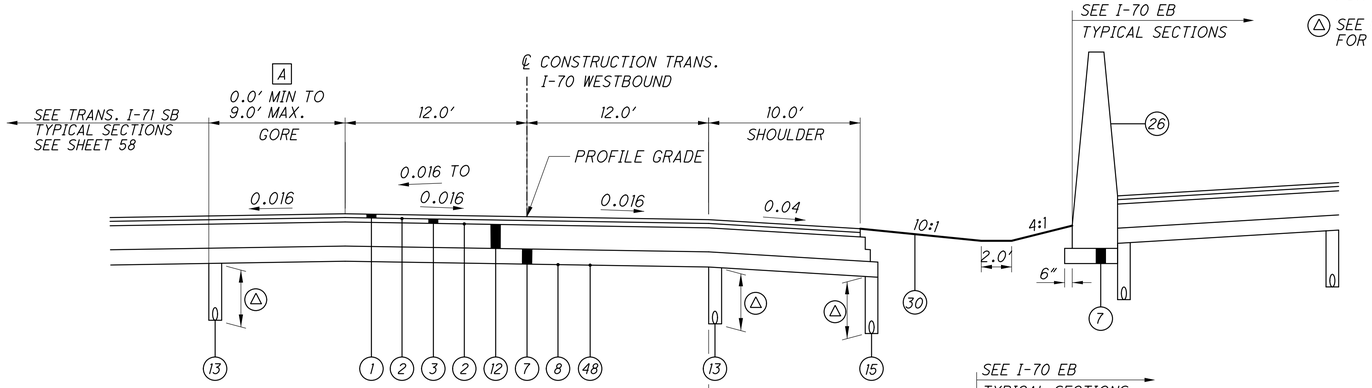

A TAPERS FROM 0.00' AT STA. 969+03.60 TO 9.00' AT STA. 972+43.83 SEE PAV'T. DETAIL SHEETS FOR PAVEMENT WIDTHS

NORMAL SECTION - TRANS. I-70 WB

SECTION APPLIES:

STA. 669+03.60 TO STA. 672+43.83 = 340.23 LIN. FT.

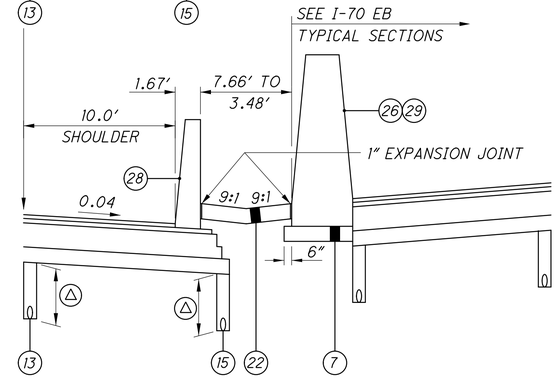

STA. 671+75.00 TO STA. 672+43.83 = 68.83 FT.

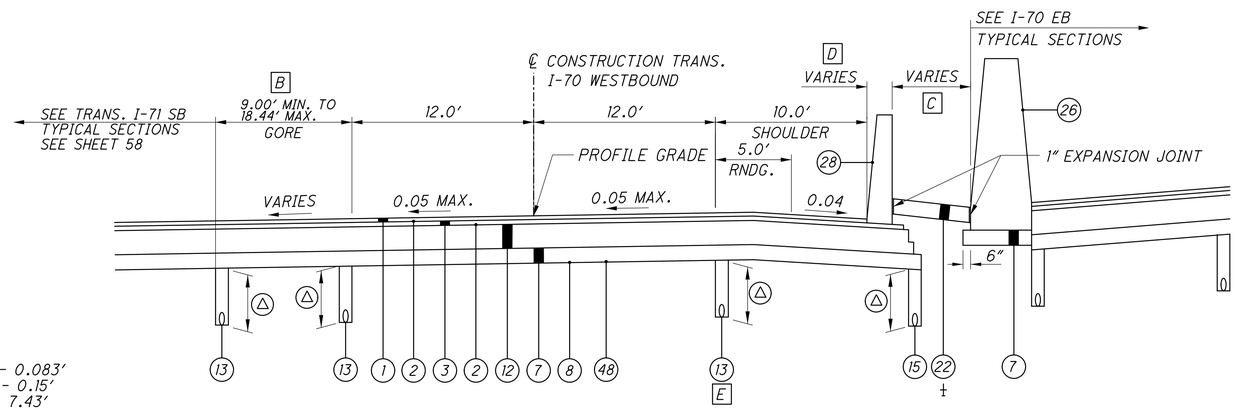

B TAPERS FROM 9.00' AT STA. 672+43.83 TO 18.44' AT STA. 675+25.00 SEE PAVEMENT DETAIL SHEETS FOR PAV'T. WIDTHS

C STA. 672+43.83 TO STA. 673+31.49 = 3.48' - 0.083'
STA. 673+31.49 TO STA. 674+55.11 = 0.083' - 0.15'
STA. 674+55.11 TO STA. 675+25.00 = 0.15' - 7.43'

D STA. 672+43.83 TO STA. 673+31.49 = 1.67'
STA. 673+31.49 TO STA. 673+34.04 = 1.67' - 1.56'
STA. 673+34.04 TO STA. 673+47.35 = 1.56'
STA. 673+47.35 TO STA. 673+60.40 = 1.56' - 1.67'
STA. 673+60.40 TO STA. 675+25.00 = 1.67'

E UNDERDRAIN END AT STA. 672+92.95

SUPERELEVATED SECTION - TRANS. I-70 WB

SECTION APPLIES:

STA. 672+43.83 TO STA. 675+25.00 = 281.17 LIN. FT.

‡ END CONCRETE SLOPE PROTECTION AT STA. 675+04.39

CROSS REFERENCES	
SHT NO	DESCRIPTION
588, 591	PLAN

TYPICAL SECTIONS - TRANS. I-70 WESTBOUND
STA. 669+03.60 TO STA. 675+25.00

FRA-70-14.54

ms consultants, inc.

NOTE: SEE SUPERELEVATION TABLES FOR TRANSITION STATING AND RATES.

FOR LEGEND SEE SHEET 17

△ SEE UNDERDRAIN SUB-SUMMARY SHEETS FOR DEPTH AND QUANTITIES.

** VARIES 0.040 OR RATE OF SUPER IF GREATER

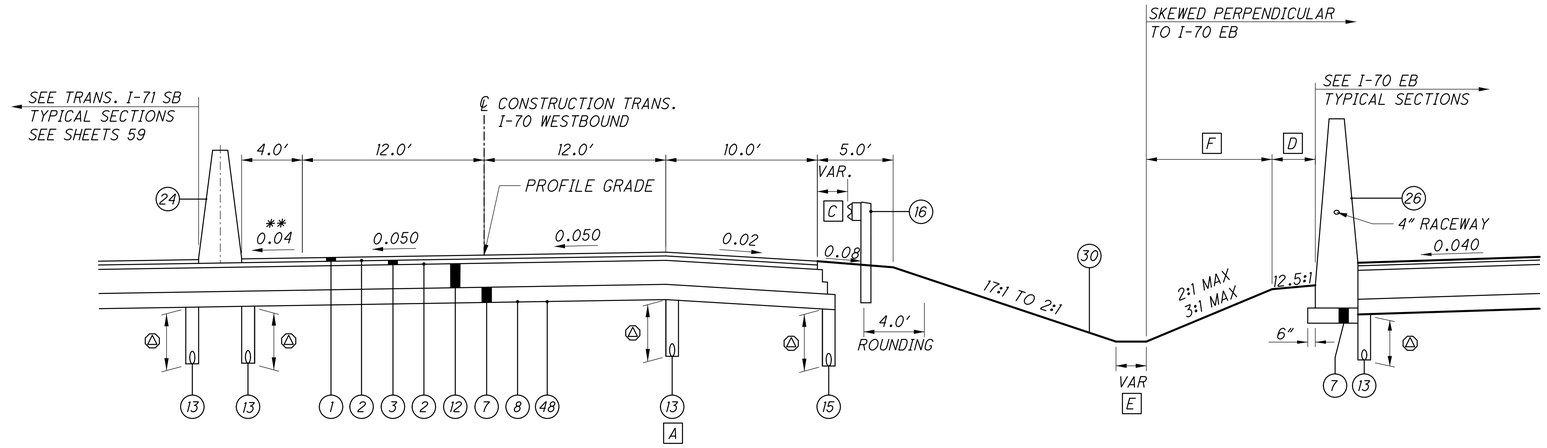

SUPERELEVATED SECTION - TRANS. I-70 WB

SECTION APPLIES:

STA. 675+25.00 TO STA. 679+40.36 = 415.36 LIN. FT.

A BEGIN UNDERDRAIN AT STA. 679+02.07, 12.50' RT.

B TAPERS FROM 12.00' AT STA. 679+60.21 TO 12.12' AT STA. 679+70.75

C STA. 675+25.00 TO STA. 675+74.04 = 0.0'
STA. 675+74.04 TO STA. 676+24.04 = 0.0' - 2.0'
STA. 676+24.04 TO STA. 679+40.36 = 2.0'

D STA. 675+25.00 TO STA. 675+49.82 = 0.0'
STA. 675+49.82 TO STA. 675+81.57 = 0.0' - 6.08'
STA. 675+81.57 TO STA. 676+49.12 = 6.08' - 9.83'
STA. 676+49.12 TO STA. 679+40.36 = 9.83'

F STA. 675+25.00 TO STA. 675+49.82 = 0.0'
STA. 675+49.82 TO STA. 677+50.00 = 0.0' - 18.59'

E STA. 675+25.00 TO STA. 676+00.00 = 0.0'
STA. 676+00.00 TO STA. 676+50.00 = 0.0' - 2.0'
STA. 676+50.00 TO STA. 677+50.00 = 2.0'
STA. 677+50.00 TO STA. 679+40.36 = EXISTING DITCH

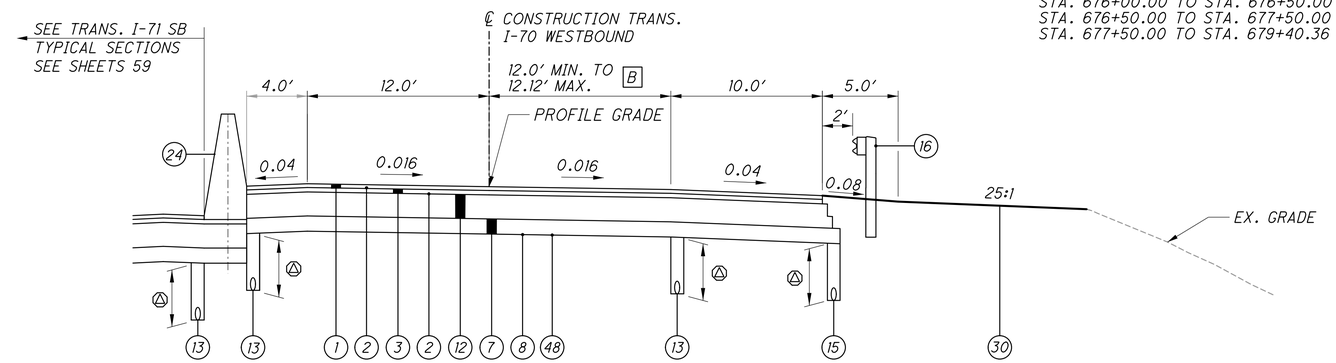

NORMAL SECTION - TRANS. I-70 WB

SECTION APPLIES:

STA. 679+40.36 TO STA. 679+70.75 = 30.39 LIN. FT.

CROSS REFERENCES	
SHT NO	DESCRIPTION
591/594	PLAN

TYPICAL SECTIONS - TRANS. I-70 WESTBOUND
STA. 675+25.00 TO STA. 679+70.75

FRA-70-14.54

ms consultants, inc.

PLOT.CEL

ms consultants, inc.
msconsultants.com

www.msconsultants.com
Ohio DOT Workspace
70\71 East Interchange 2E
PCF: 60-06634_2E_Columbus
ODF: ohdot\V8i

Batchplot Spec: \\msconsultants.com\files\production\03\60\06634_2E\standards\plotdr\batchplt.spc
Pen Table: N:\03\60\06634_2E\standards\tables\V8i_ms_std_06634_2D_Plan View.tbl
Plot Driver: \\msconsultants.com\files\Standards\ustn\ohdot\v8i\ms\plotting\PDF.pltcfg

Model: SHEET 1
Printed: 6/19/2018 @ 7:56:17 AM
File: N:\03\60\06634_2E\roadway\sheets\Sheets from 2LMN\77370_GY00612LMN1.dgn
View: FENCE_VIEW1
By: jdouglas

34" x 22"

NOTE: SEE SUPERELEVATION TABLES FOR TRANSITION STATING AND RATES.

FOR LEGEND SEE SHEET 17

(△) SEE UNDERDRAIN SUB-SUMMARY SHEETS FOR DEPTH AND QUANTITIES.

** OR RATE OF SUPER IF GREATER

(XX.X') SKEWED TO APPROACH SLAB

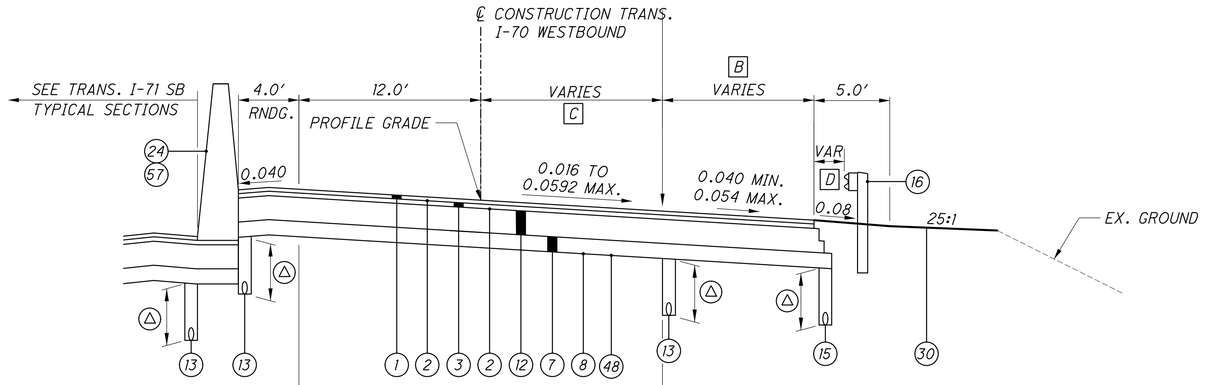

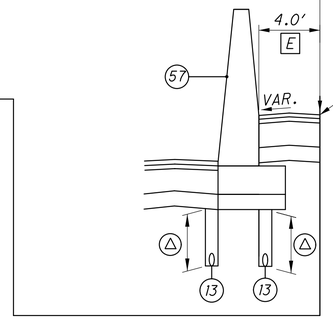

STA. 679+91.39 TO STA. 680+91.65 = 100.26 LIN. FT.

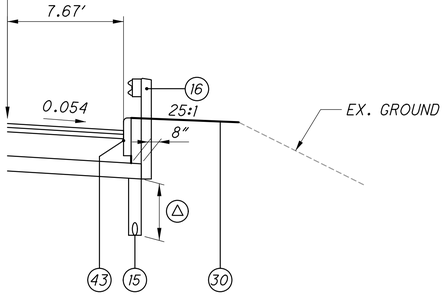

STA. 681+73.39 TO
STA. 681+94.05 (SKEWED) = 20.66 LIN. FT.

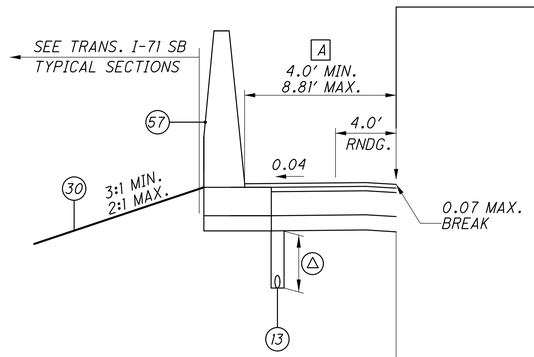

STA. 680+91.65 TO
STA. 682+17.66 = 126.01 LIN. FT.

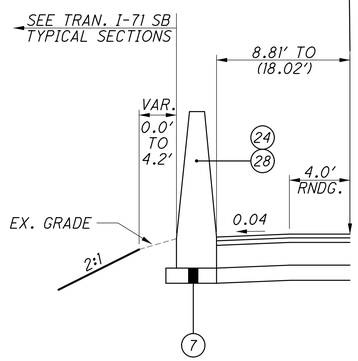

STA. 682+17.66 TO
STA. (682+24.20) SKEWED = 6.45 LIN FT.

SUPERELEVATED SECTION - TRANS. I-70 WB

SECTION APPLIES:

STA. 679+70.75 TO STA. (682+24.20) (SKEWED) = 253.45 LIN. FT.

A TAPERS FROM 4.0' @ STA. 681+04.30 TO 8.81' @ STA. 682+17.66

B STA. 680+82.09 TO STA. 681+14.91 = 10.00' - 7.82'
STA. 681+14.91 TO STA. 681+73.39 = 7.82' - 7.67'

C STA. 679+70.75 TO STA. 680+72.60 = 12.12' - 14.25'
STA. 680+72.60 TO 681+22.50 = 14.25'
STA. 681+22.50 TO STA. 682+06.06 = 14.25' - 12.58'

D STA. 679+70.75 TO STA. 681+14.91 = 2.0'
STA. 681+14.91 TO STA. 681+43.46 = 2.0' - 0.0'
STA. 681+43.46 TO 681+73.39 = 0.0'

E STA. 679+91.39 TO STA. 680+04.36 = 0.040 FT/FT
STA. 680+04.36 TO STA. 680+91.65 = 4.0' ROUNDING

CROSS REFERENCES	
SHT NO	DESCRIPTION
594-597	PLAN

TYPICAL SECTIONS - TRANS. I-70 WESTBOUND
STA. 679+70.75 TO STA. 682+24.20

FRA-70-14.54

29
2317

ms consultants, inc.

PLOT.CEL
ms consultants, inc.
msconsultants.com
www.msconsultants.com

TYPICAL SECTIONS - I-70 WESTBOUND
STA. 783+76.48 TO STA. 787+13.90

CALCULATED DWH
CHECKED TAZ

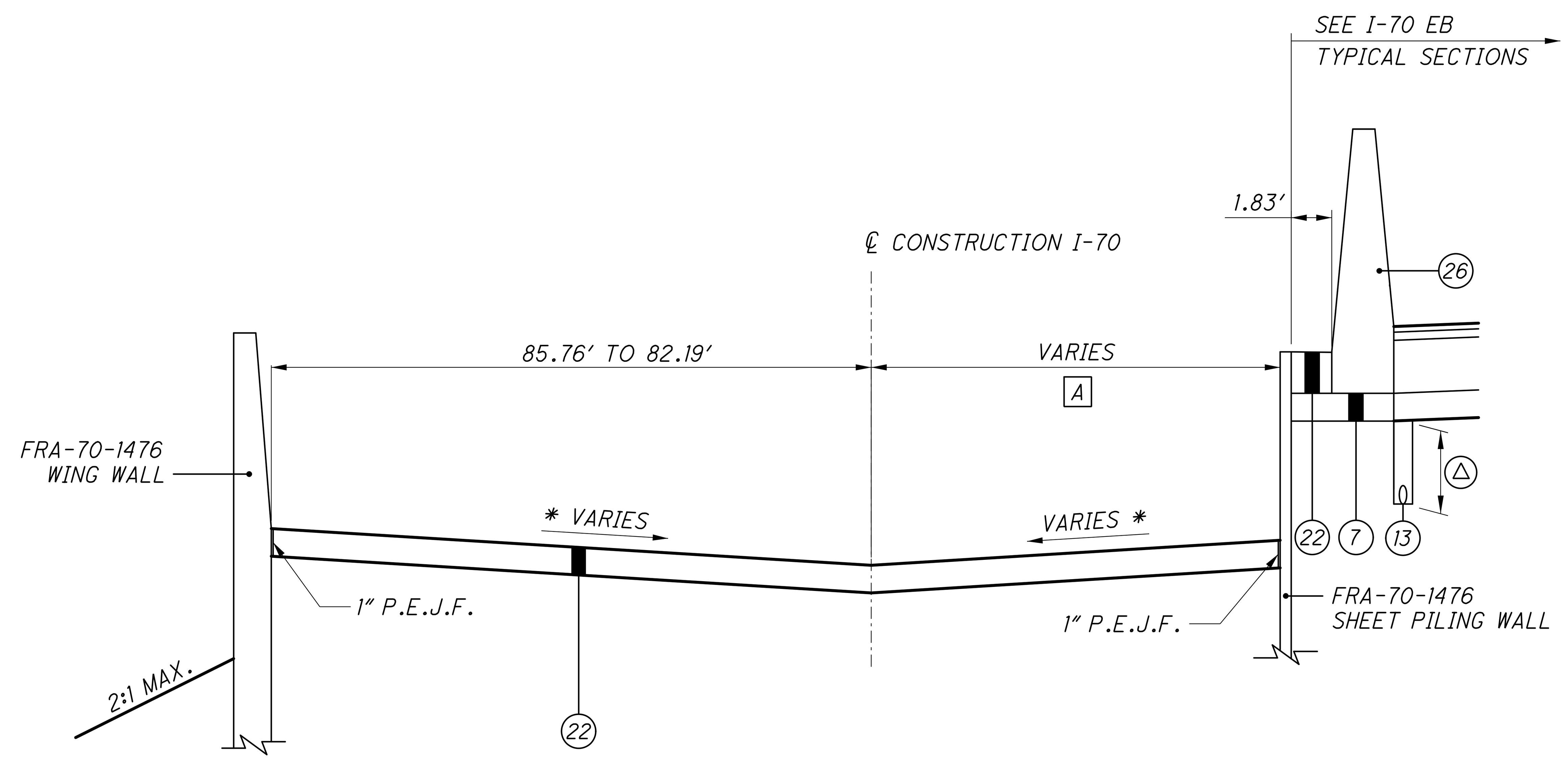

CONCRETE CAP SECTION - I-70 WB

SECTION APPLIES:

STA. 783+76.48 TO STA. 784+26.95 (SKEWED TO BRIDGE) = 50.47 LIN. FT.

* SEE PAVEMENT DETAILS

[A] STA. 783+76.48 TO STA. 784+03.50 = 34.00' - 33.01' (SKEWED)
STA. 784+03.50 TO STA. 784+26.95 = 33.01' - 19.80' (SKEWED)

[B] STA. 783+26.95 (SKEWED) TO STA. 784+63.62 (NORMAL) =
19.80' (SKEWED) - 0.00'

[C] STA. 784+63.62 TO STA. 784+77.29 = 0.00' - 3.24'

[D] STA. 783+26.95 (SKEWED) TO STA. 784+90.18 = 82.19' (SKEWED) - 48.76'
STA. 784+90.18 TO STA. 785+37.50 = 48.76'
STA. 785+37.50 TO STA. 787+33.46 = 48.76'

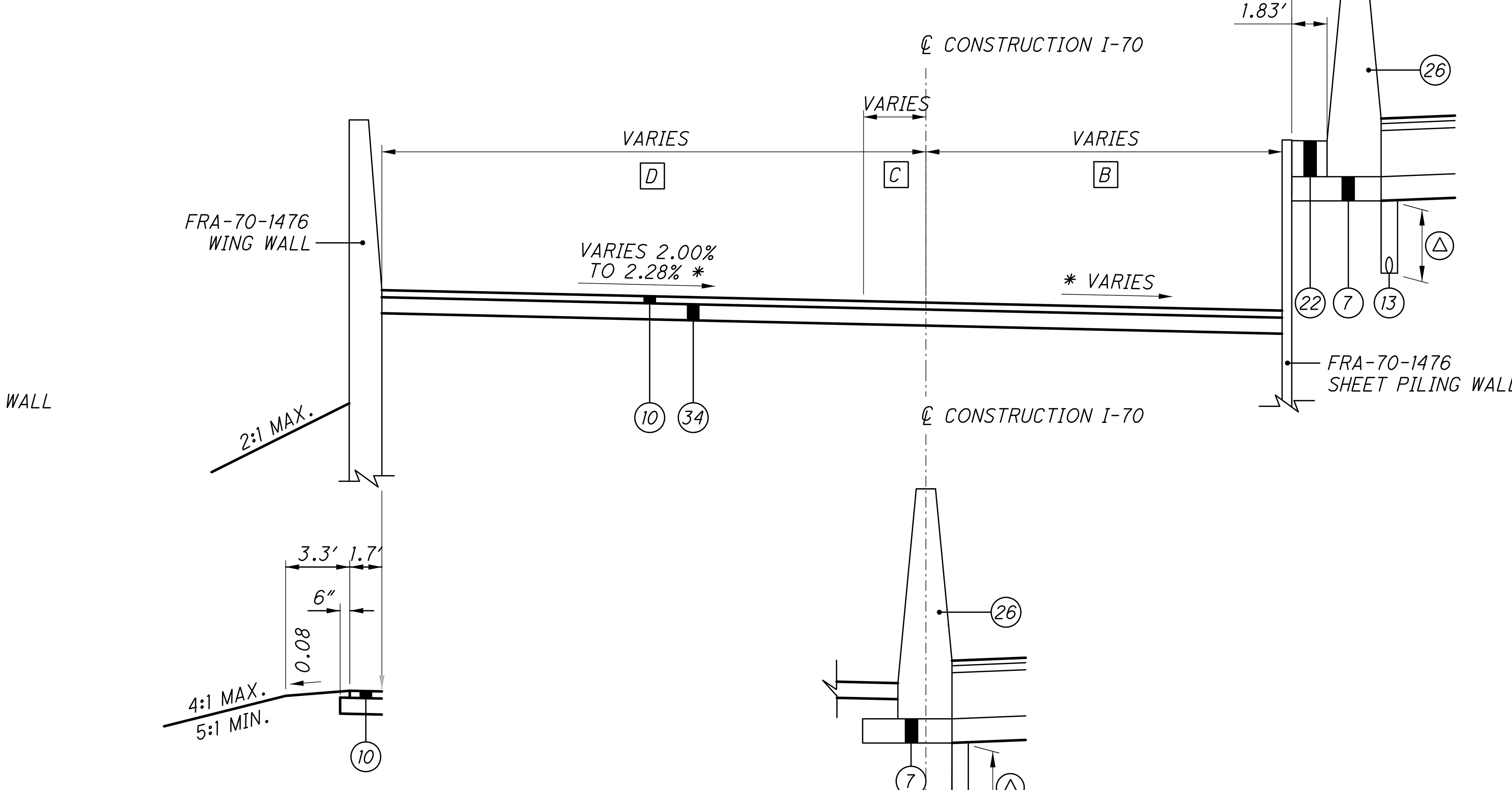

STA. 785+37.50 TO
STA. 787+00.00 = 162.50 LIN. FT.

STA. 784+79.29 TO
STA. 787+28.95 = 249.66 LIN. FT.

ASPHALT CAP SECTION - I-70 WB

SECTION APPLIES:

STA. 784+26.95 (SKEWED) TO
STA. 787+13.90 (SKEWED) = 286.95 LIN. FT.

* SEE PAVEMENT DETAILS

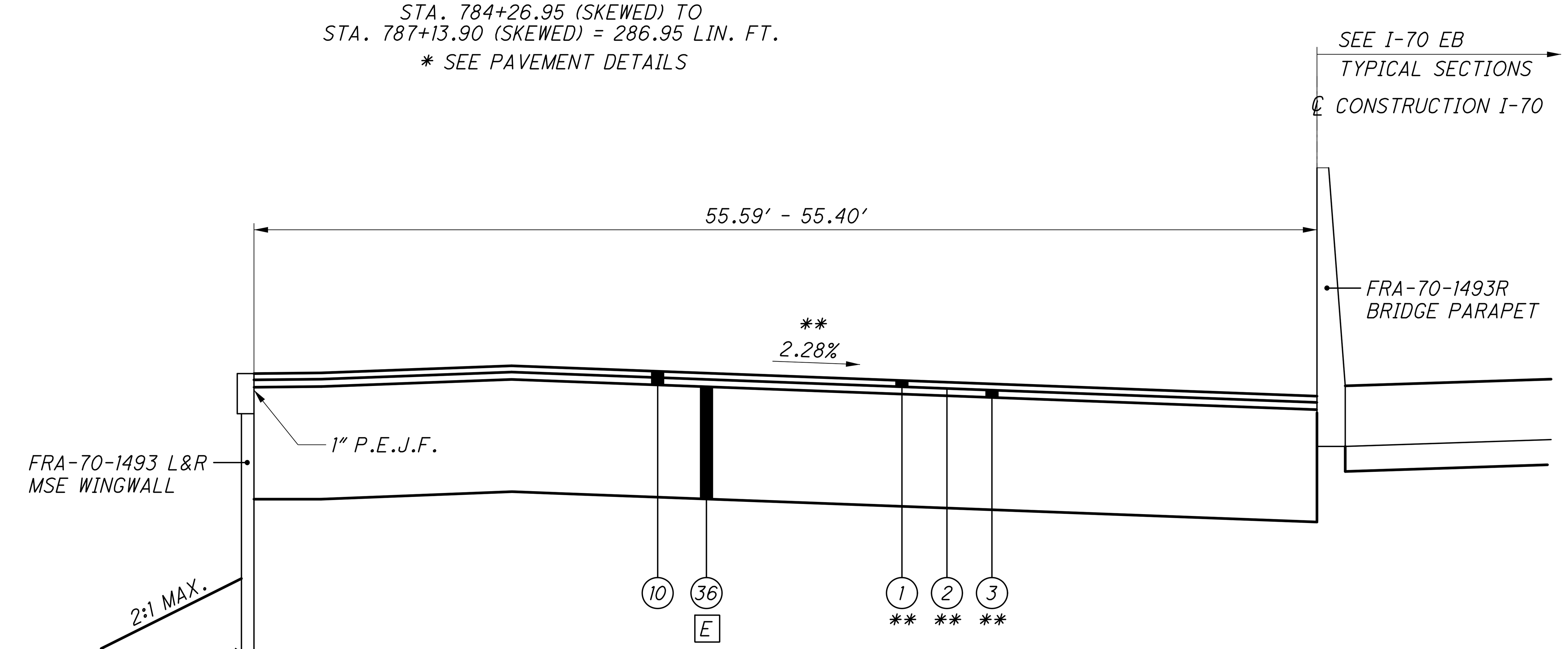

SUPERELEVATION SECTION - I-70 WB

SECTION APPLIES:

STA. 787+13.90 TO STA. 787+43.90 (SKEWED TO BRIDGE) = 30 LIN. FT.
**STA. 788+66.00 TO STA. 788+96.00 (SKEWED TO BRIDGE) = 30 LIN. FT.

** FOR FORWARD ABUTMENT, MATCH CROSS SLOPES
OF ADJOINING TYPICAL SECTION.

[E] VARIABLE THICKNESS
STA. 787+13.90 TO STA. 787+43.90 = 0.0' TO 7.20'
** STA. 788+66.00 TO STA. 788+96.00 = 7.25' TO 0.00'

NOTE: SEE SUPERELEVATION TABLES FOR TRANSITION STATIONING AND RATES.

FOR LEGEND. SEE SHEET 17

(△) SEE UNDERDRAIN SUB-SUMMARY SHEETS FOR DEPTH AND QUANTITIES.

CROSS REFERENCES

SHT NO	DESCRIPTION
597-604	PLAN
1713-1798	BRIDGE FRA-70-1476 L&R

34" x 22"

FRA-70-14.54

ms consultants, inc.

NOTE: SEE SUPERELEVATION TABLES FOR TRANSITION STATIONING AND RATES.

FOR LEGEND. SEE SHEET 17

△ SEE UNDERDRAIN SUB-SUMMARY SHEETS FOR DEPTH AND QUANTITIES.

CROSS REFERENCES	
SHT NO	DESCRIPTION
599-604	PLAN

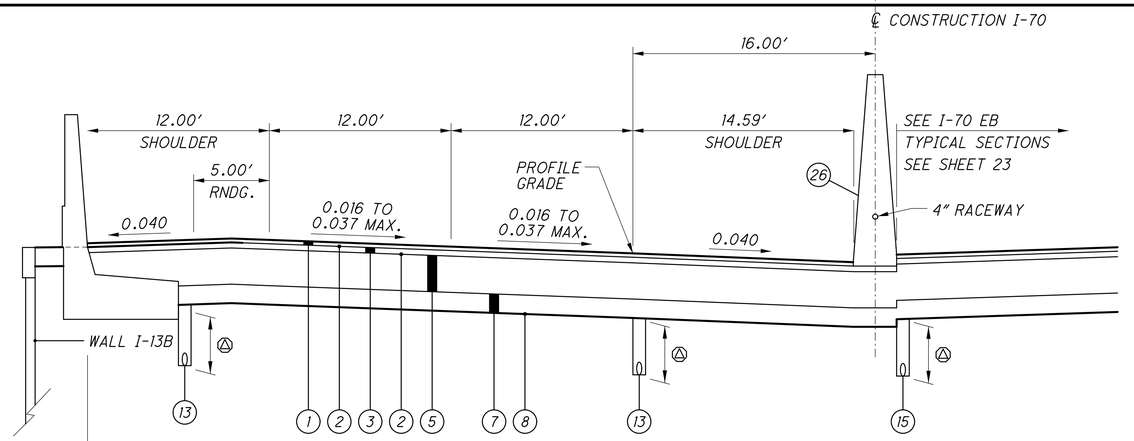

SUPERELEVATED SECTION - I-70 WB

SECTION APPLIES:

STA. 788+96.00 (SKEWED) TO STA. 792+50.00 = 354.00 LIN. FT.

** VARIES 0.040 OR RATE OF SUPER IF GREATER
‡ UNLESS OTHERWISE SHOWN IN CROSS SECTIONS

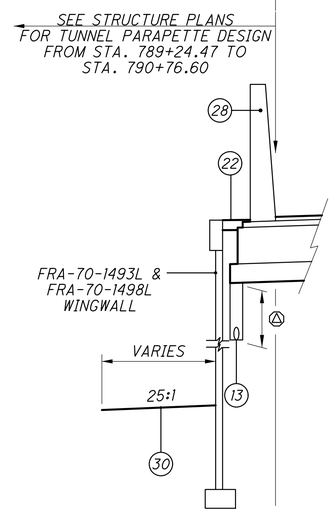

STA. 789+24.47 TO STA. 790+76.60 = 152.13 LIN. FT.
STA. 791+00.00 TO STA. 792+50.00 = 150.00 LIN. FT.

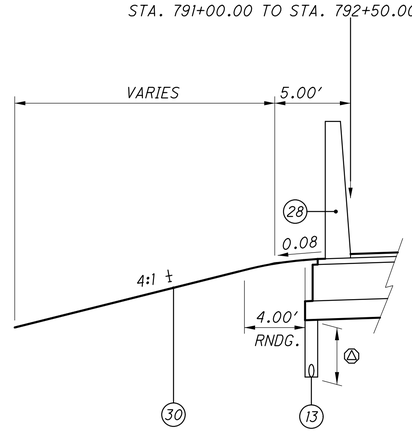

STA. 790+76.60 TO STA. 791+00.00 = 23.40 LIN. FT.

CALCULATED DWH
CHECKED TAZ

TYPICAL SECTIONS - I-70 WESTBOUND
STA. 787+13.90 TO STA. 792+50.00

FRA-70-14.54

PLOT.CEL
ms consultants, inc.
msconsultants.com
www.msconsultants.com
Batchplot Spec: \\msconsultants.com\files\production\03\60\06634_2E\standards\plotdrv\batchplt.spc
Pen Table: \\msconsultants.com\files\Production\03\60\06634_2E\deliverables\2018-06-20 2E-Submittal to COC\PDF PLAN SHEET 70\71 East Interchange 2E
Plot Driver: \\msconsultants.com\files\Standards\ustn\ohdot\v8i\ms\plotting\PDF.pltcfg
Model: Sheet
Printed: 6/19/2018 @ 7:56:21 AM
File: N:\03\60\06634_2E\roadway\sheets\105322GY011.dgn
View: FENCE_VIEW1
By: jdouglas
34" x 22"
ms consultants, inc.

PLOT.CEL

ms consultants, inc.
msconsultants.com

Ohio DOT Workspace
70\71 East Interchange 2E
PCF: ohdot1V8i
PCF: 60-06634_2E_Columbus

1"
0.5"
0

Batchplot Spec: \\msconsultants.com\files\production\03\60\06634_2E\standards\plotdrv\batchplt.spc
Pen Table: T:\temp\DWH\V8i_ms_std.tbl
Plot Driver: \\msconsultants.com\files\Standards\ustn\ohdot\v8i\ms\plotting\PDF.pltcfg

Model: Sheet
Printed: 7/23/2018 @ 11:47:25 AM
File: N:\03\60\06634_2E\roadway sheets\105322Gr104.dgn
View: FENCE_VIEW1
By: dhall

34" x 22"

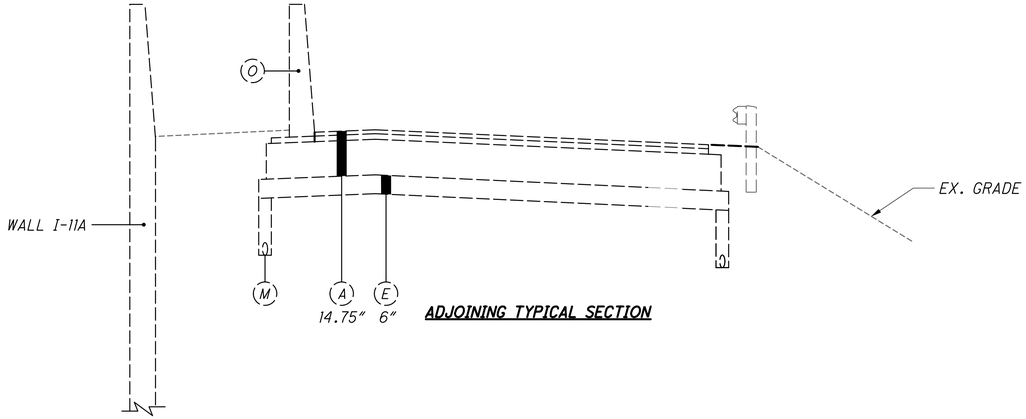

ADJOINING TYPICAL SECTION

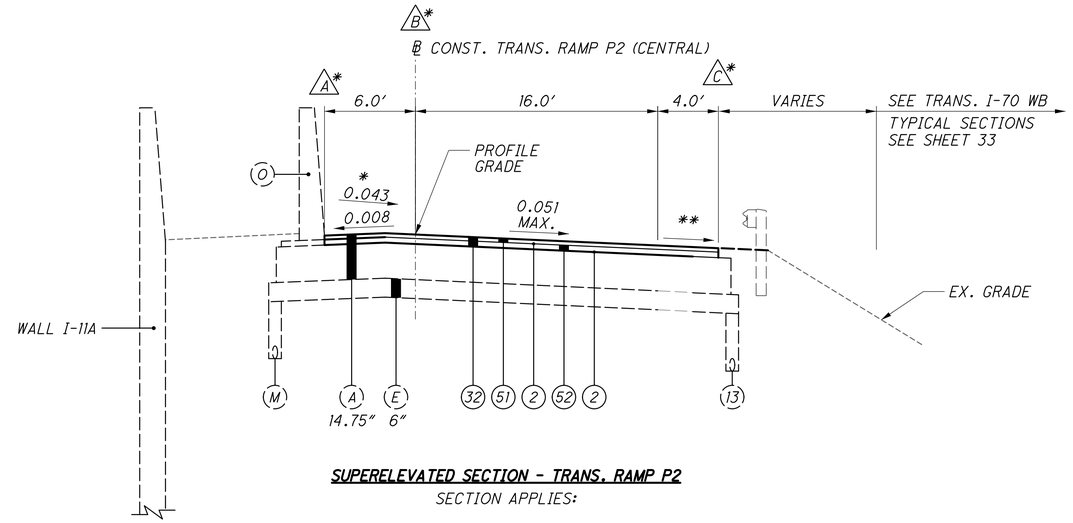

SUPERELEVATED SECTION - TRANS. RAMP P2

SECTION APPLIES:

STA. 791+77.25 TO STA. 793+00.00 = 122.75 LIN. FT.

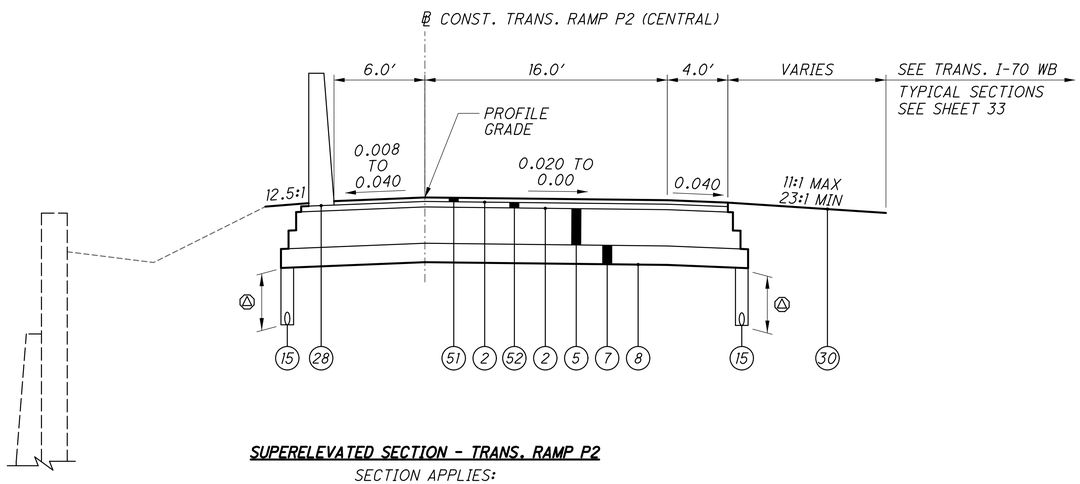

SUPERELEVATED SECTION - TRANS. RAMP P2

SECTION APPLIES:

STA. 793+00.00 TO STA. 793+83.85 = 58.85 LIN. FT.

NOTE: SEE SUPERELEVATION TABLES FOR TRANSITION STATIONING AND RATES.

FOR LEGEND. SEE SHEET 17

△ SEE UNDERDRAIN SUB-SUMMARY SHEETS FOR DEPTH AND QUANTITIES.

** ROUNDING APPLIES WHEN SUPER ELEVATION EXCEEDS 3%*

*** VARIES 0.040 OR RATE OF SUPER IF GREATER*

** MILLING DEPTH*

STA.	A*	B*	C*	
792+00.00	-0.27'	-0.27'	-0.27'	
792+50.00	-0.27'	-0.31'	-0.29'	
793+00.00	-0.27'	-0.46'	-0.40'	

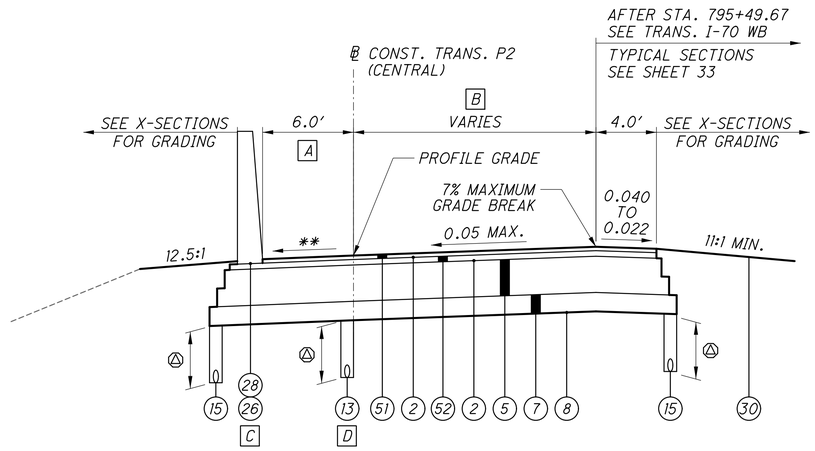

SUPERELEVATED SECTION - TRANS. RAMP P2

SECTION APPLIES:

STA. 793+83.85 TO STA. 802+72.68 = 888.83 LIN. FT.

A
- *STA. 793+83.85 TO STA. 794+99.67 = 6.0'*
- *STA. 794+99.67 TO STA. 795+49.67 = 6.0' - 8.0'*
- *STA. 795+49.67 TO STA. 802+72.68 = 8.0'*

B
- *STA. 793+83.85 TO STA. 797+60.95 = 16.0'*
- *STA. 797+60.95 TO STA. 800+60.22 = 16.0' - 12.0'*
- *STA. 800+60.22 TO STA. 802+72.68 = 12.0'*

C
- *CONCRETE BARRIER, TYPE D*
  STA. 793+83.85 TO STA. 796+00.00
  STA. 802+25.00 TO STA. 802+72.68
- *CONCRETE BARRIER, TYPE C1*
  STA. 796+00.00 TO STA. 797+50.00

D
- *BEGIN UNDERDRAIN AT STA. 795+49.67*

CROSS REFERENCES	
SHT NO	DESCRIPTION
602-609	PLAN

CALCULATED DWH
CHECKED TAZ

TRANSITIONAL PAVEMENT TYPICAL SECTIONS RAMP P2 (CENTRAL) - STA. 791+77.25 TO STA. 802+72.68

FRA-70-14.54

ms consultants, inc.

PLOT.CEL

ms consultants, inc.
msconsultants.com

www.msconsultants.com
Ohio DOT Workspace
70\71 East Interchange 2E

1" 0.5" 0

Batchplot Spec: \\msconsultants.com\Files\Production\03\60\06634_2E\standards\plotdrv\batchplt.spc PCF: ohdot1V8i
Pen Table: \\msconsultants.com\Files\Production\03\60\06634_2E\deliverables\V8i_ms_std.tbl PCF: 60-06634_2E_Columbus
Plot Driver: \\msconsultants.com\Files\Standards\ustn\ohdot\v8i\ms\plotting\PDF.pltcfg

Model: Sheet View: FENCE_VIEW1
Printed: 8/1/2018 @ 2:02:19 PM By: jdouglas
File: N:\03\60\06634_2E\roadway\Sheets\105322G1706.dgn

34" x 22"

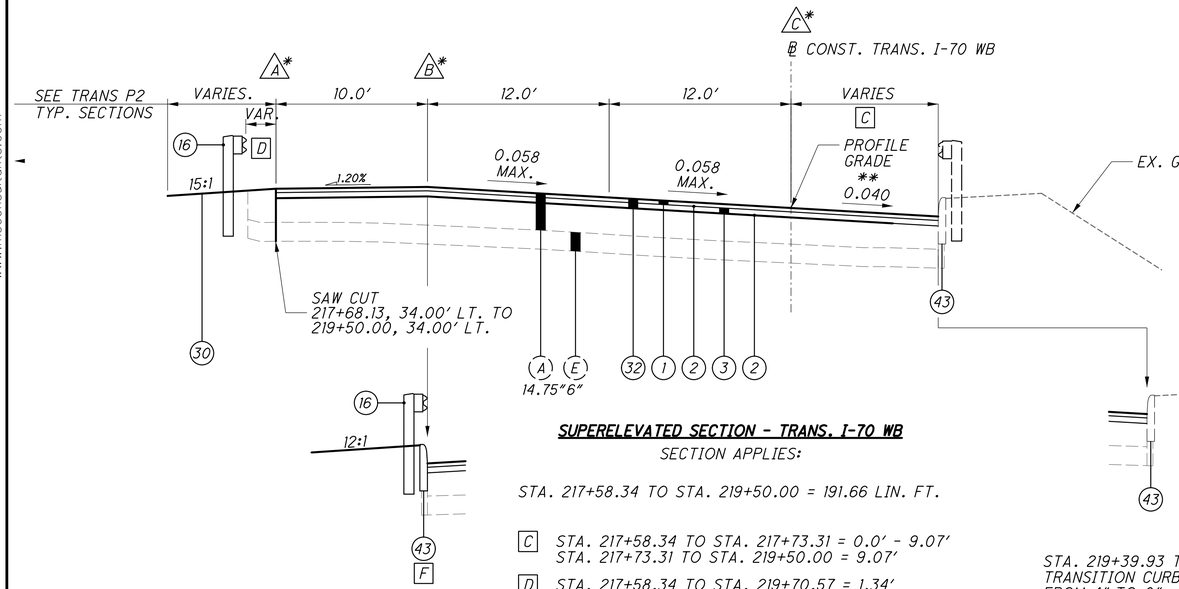

SUPERELEVATED SECTION - TRANS. I-70 WB

SECTION APPLIES:

STA. 217+58.34 TO STA. 219+50.00 = 191.66 LIN. FT.

C STA. 217+58.34 TO STA. 217+73.31 = 0.0′ - 9.07′
STA. 217+73.31 TO STA. 219+50.00 = 9.07′

D STA. 217+58.34 TO STA. 219+70.57 = 1.34′
STA. 217+70.57 TO STA. 217+82.79 = 1.34′ - 2.0′
STA. 217+82.79 TO STA. 218+80.64 = 2.0′
STA. 218+80.64 TO STA. 218+92.84 = 2.0′ - 2.75′
STA. 218+92.84 TO STA. 219+41.75 = 2.75′

F TAPER CURB FROM 4″ TO 0″

STA. 217+58.34 TO STA. 217+68.13
= 9.79 LIN FT.

STA. 219+39.93 TO STA. 219+50.00
TRANSITION CURB HEIGHT
FROM 4″ TO 0″

* MILLING DEPTH/LEVELING COURSE CHART

STA.	A*	B*	C*	
218+00.00	-0.24′	-0.27′	-0.34′	
218+50.00	-0.22′	-0.25′	-0.38′	
219+00.00	-0.15′	-0.18′	-0.26′	
219+50.00	-0.12′	-0.16	-0.05′	

NOTE: SEE SUPERELEVATION TABLES FOR TRANSITION STATIONING AND RATES.

FOR LEGEND. SEE SHEET 17

△ SEE UNDERDRAIN SUB-SUMMARY SHEETS FOR DEPTH AND QUANTITIES.

* ROUNDING APPLIES WHEN SUPER ELEVATION EXCEEDS 3%

** VARIES 0.040 OR RATE OF SUPER IF GREATER

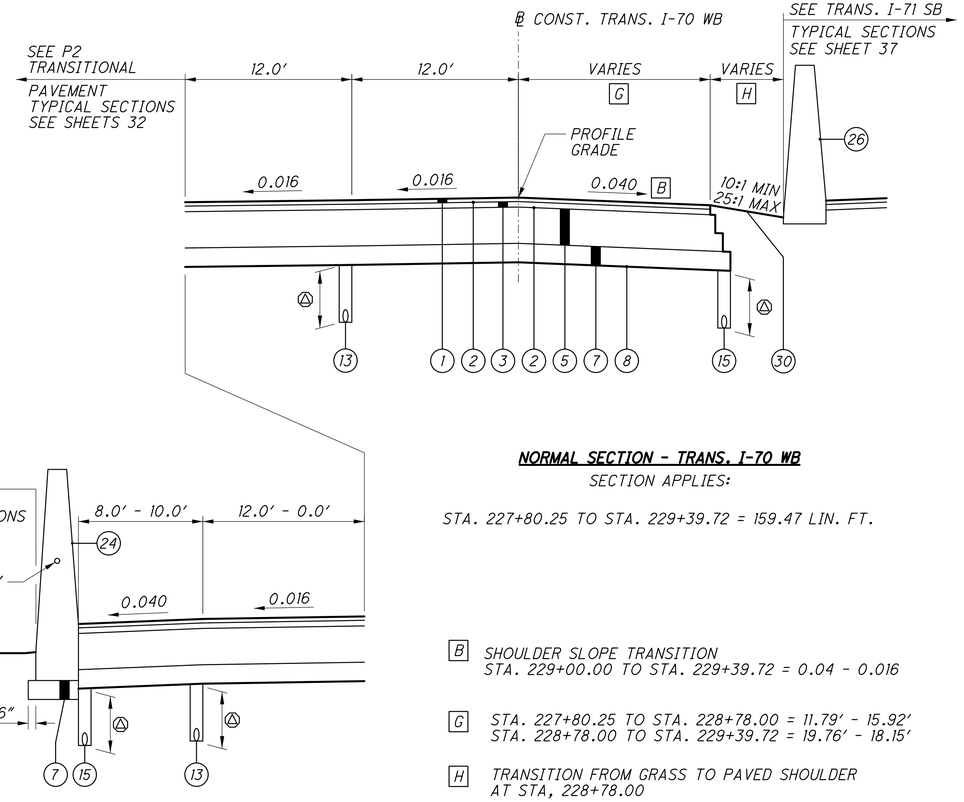

NORMAL SECTION - TRANS. I-70 WB

SECTION APPLIES:

STA. 227+80.25 TO STA. 229+39.72 = 159.47 LIN. FT.

B SHOULDER SLOPE TRANSITION
STA. 229+00.00 TO STA. 229+39.72 = 0.04 - 0.016

G STA. 227+80.25 TO STA. 228+78.00 = 11.79′ - 15.92′
STA. 228+78.00 TO STA. 229+39.72 = 19.76′ - 18.15′

H TRANSITION FROM GRASS TO PAVED SHOULDER
AT STA, 228+78.00

STA. 228+39.23 TO
STA. 229+39.72 = 100.49 LIN. FT.

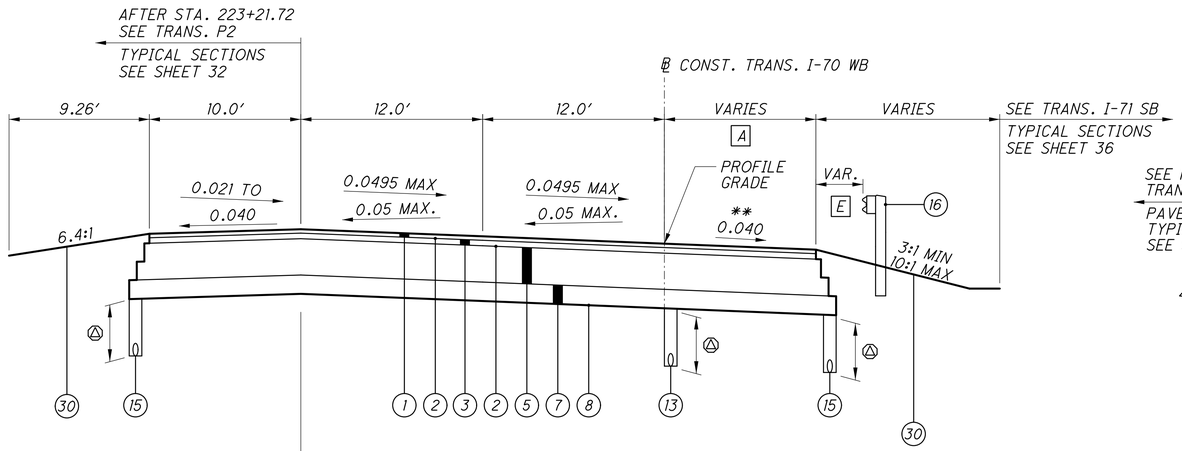

SUPERELEVATED/NORMAL/SUPERELEVATED SECTION - TRANS. I-70 WB

SECTION APPLIES:

STA. 219+50.00 TO STA. 227+80.25 = 830.25 LIN. FT.

A STA. 219+50.00 TO STA. 227+39.90 = 10.0′
STA. 227+39.90 TO STA. 227+80.25 = 10.0′ - 11.79′

E STA. 219+50.00 TO STA. 219+62.48 = 0.09′ - 2.0′
STA. 219+62.48 TO STA. 224+86.87 = 2.0′
STA. 224+86.87 TO STA. 224+99.27 = 2.0′ - 2.75′
STA. 224+99.27 TO STA. 225+48.93 = 2.75′

STA. 221+09.76 TO
STA. 223+21.72 = 211.96 LIN. FT.

CROSS REFERENCES	
SHT NO	DESCRIPTION
602-609	PLAN

CALCULATED DWH
CHECKED TAZ

TRANSITIONAL PAVEMENT TYPICAL SECTIONS I-70 WB (E)
STA. 217+58.34 TO STA. 229+39.72

FRA-70-14.54

ms consultants, inc.

PLOT.CEL

ms consultants, inc.
msconsultants.com

www.msconsultants.com

Ohio DOT Workspace
70\71 East Interchange 2E

ODF: ohdot\V8i
PCF: 60-06634_2E_Columbus

Batchplot Spec: \\msconsultants.com\files\production\03\60\06634_2E\standards\plotdrv\batchplt.sbs
Pen Table: N:\03\60\06634_2E\standards\tables\V8i_ms_std_06634_2D_Plan View.tbl
Plot Driver: \\msconsultants.com\files\Standards\usetn\ohdot\v8i\ms\plotting\PDF.pltcfg

Model: Sheet
Printed: 6/19/2018 @ 7:56:25 AM
File: N:\03\60\06634_2E\roadway\sheets\105226107.dgn

View: FENCE_VIEW1
By: jdouglas

34" x 22"

NOTE: SEE SUPERELEVATION TABLES FOR TRANSITION STATIONING AND RATES.

FOR LEGEND. SEE SHEET 17

Ⓐ SEE UNDERDRAIN SUB-SUMMARY SHEETS FOR DEPTH AND QUANTITIES.

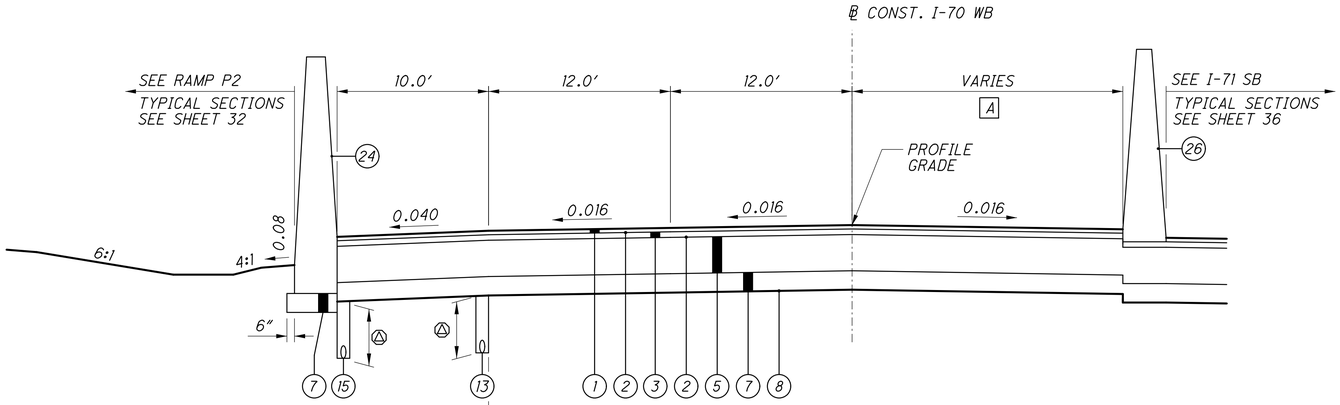

NORMAL SECTION - TRANS. I-70 WB (E)

SECTION APPLIES:

STA. 229+39.72 TO STA. 233+15.86 = 376.14 LIN. FT.

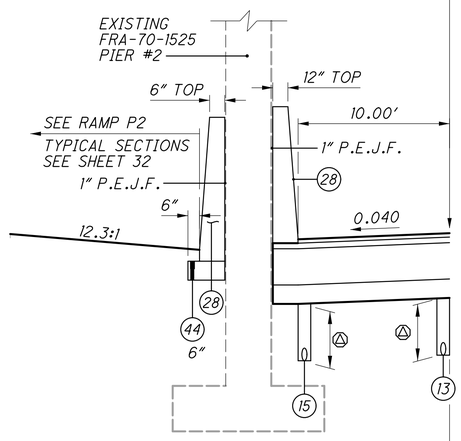

STA. 230+08.77 TO STA. 231+39.12 = 130.35 LIN. FT.

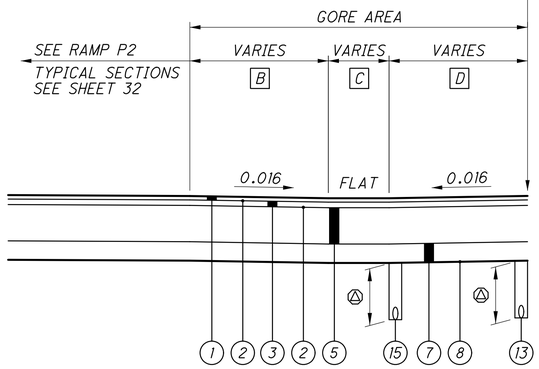

STA. 232+19.09 TO STA. 233+15.86 = 96.77 LIN. FT.

A STA. 229+39.72 TO STA. 233+15.86 = 18.16 - 11.39'

B STA. 232+19.09 TO STA. 232+55.67 = 10.83' - 8.98'
STA. 232+55.67 TO STA. 232+75.00 = 8.98' - 10.43'
STA. 232+75.00 TO STA. 233+15.86 = 10.43' - 9.21'

C STA. 232+19.09 TO STA. 232+55.67 = 4.0'
STA. 232+55.67 TO STA. 232+75.00 = 4.0' - 0.0'
STA. 232+75.00 TO STA. 233+15.86 = 0.0'

D STA. 232+19.09 TO STA. 232+55.67 = 9.16' - 8.98'
STA. 232+55.67 TO STA. 232+75.00 = 8.98' - 10.43'
STA. 232+75.00 TO STA. 233+15.86 = 10.43' - 9.12'

CROSS REFERENCES	
SHT NO	DESCRIPTION
609-615	PLAN

CALCULATED DWH
CHECKED TAZ

TRANSITIONAL PAVEMENT TYPICAL SECTIONS - I-70 WB (E)
STA. 229+39.72 TO STA. 233+15.86

FRA-70-14.54

ms consultants, inc.

PLOT.CEL

ms consultants, inc.
msconsultants.com

www.msconsultants.com

Ohio DOT Workspace
70\71 East Interchange 2E

ODF: ohdot\V8i
PCF: 60-06634_2E_Columbus

Batchplot Spec: \\msconsultants.com\files\production\03\60\06634_2E\standards\plotdrv\batchplt.spc
Pen Table: T:\temp\DWH\V8i_ms_std.tbl
Plot Driver: \\msconsultants.com\files\Standards\ustn\ohdot\v8i\ms\plotting\PDF.pltdrg

Model: Sheet
Printed: 7/23/2018 @ 1:29:51 PM
File: N:\03\60\06634_2E\roadway\sheets\105322GY017.dgn

View: FENCE_VIEW1
By: dhall

34" x 22"

A END "V" SWALE AT STA. 235+00.00, CONTINUE WITH SINGLE SLOPE OF -1.60

B STA. 237+75.00 TO STA. 245+03.39 = 0.66' - 0.0'

C STA. 237+75.00 TO STA. 243+55.90 = 10.64' - 6.06'
STA. 243+55.90 TO STA. 243+93.78 = 6.06' - 7.0'
STA. 243+93.78 TO STA. 244+58.59 = 7.0'
STA. 244+58.59 TO STA. 244+84.84 = 7.0' - 5.0'
STA. 244+84.84 TO STA. 245+03.39 = 5.0'

D END PROPOSED BARRIER AT STA. 244+58.59

E END PROPOSED CURB AND 2.0' SAWCUT AT STA. 243+59.89

F TRANSITION GORE SLOPE
STA. 234+80.34 TO STA. 235+25.00

* MILLING DEPTH/LEVELING COURSE CHART

STA.	A*	B*	C*
237+75.00	-0.51'	+0.03'	0
238+00.00	-0.43'	+0.05'	0
238+50.00	-0.34'	+0.11'	0
239+00.00	-0.24'	+0.18'	0
239+50.00	-0.17'	+0.15'	+0.22'
240+00.00	-0.16'	+0.05'	+0.12'
240+50.00	-0.17'	-0.02'	+0.03'
241+00.00	-0.22'	-0.10'	-0.09'
241+50.00	-0.26'	-0.19'	-0.18'
242+00.00	-0.25'	-0.20'	-0.22'
242+50.00	-0.27'	-0.21'	-0.24'
243+00.00	-0.24'	-0.23'	-0.26'
243+50.00	-0.25'	-0.28'	-0.30'
244+00.00	-0.34'	-0.22'	-0.25'
244+50.00	-0.30'	-0.23'	-0.22'

(+) = VAR. DEPTH ASHPALT CONE. (31)
(-) = MILLING DEPTH

G STA. 239+49.81 TO STA. 243+59.89 = 9.6' - 2.1'
STA. 243+59.89 TO STA. 245+03.39 = 0.0'

Φ VARIABLE DEPTH AT WIDENING. MINIMUM DEPTH CALLED OUT ON LEGEND SHEET. INCREASE DEPTH TO MATCH BOTTOM OF EXISTING SUB-GRADE ELEVATION IF DEEPER.

NOTE: SEE SUPERELEVATION TABLES FOR TRANSITION STATIONING AND RATES.

FOR LEGEND. SEE SHEET 17

Δ SEE UNDERDRAIN SUB-SUMMARY SHEETS FOR DEPTH AND QUANTITIES.

CROSS REFERENCES	
SHT NO	DESCRIPTION
612/649/651	PLAN
649	PLAN

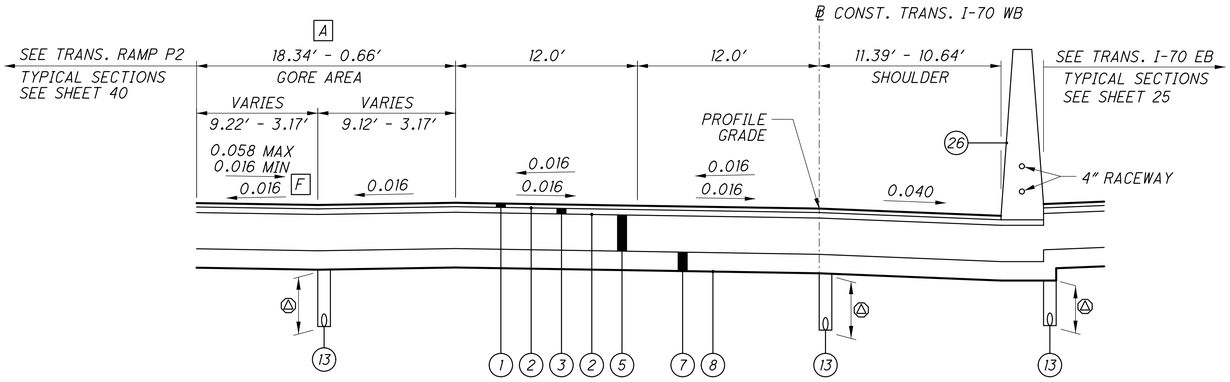

REVERSE CROWN SECTION - TRANS. I-70 WB

SECTION APPLIES:

STA. 233+15.86 TO STA. 237+75.00 = 459.14 LIN. FT.

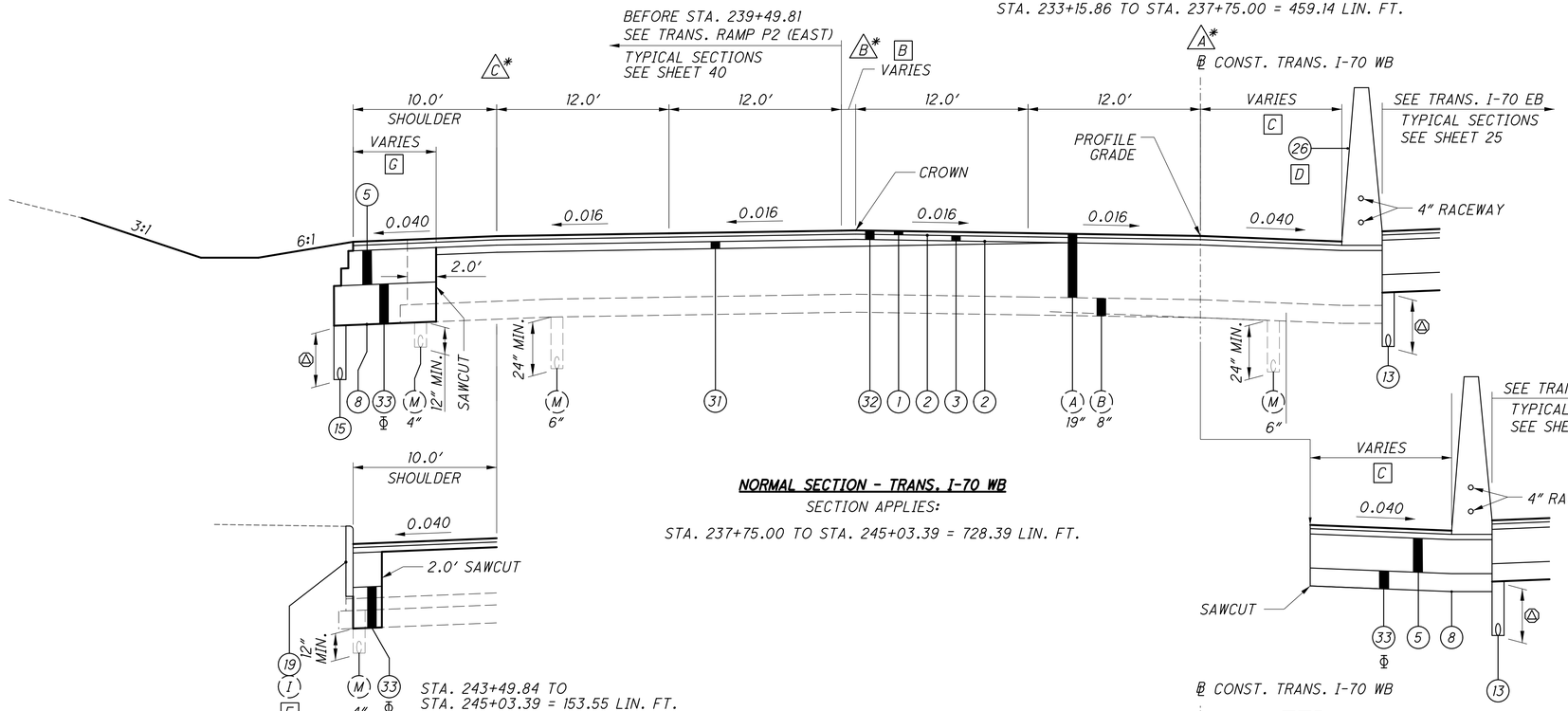

NORMAL SECTION - TRANS. I-70 WB

SECTION APPLIES:

STA. 237+75.00 TO STA. 245+03.39 = 728.39 LIN. FT.

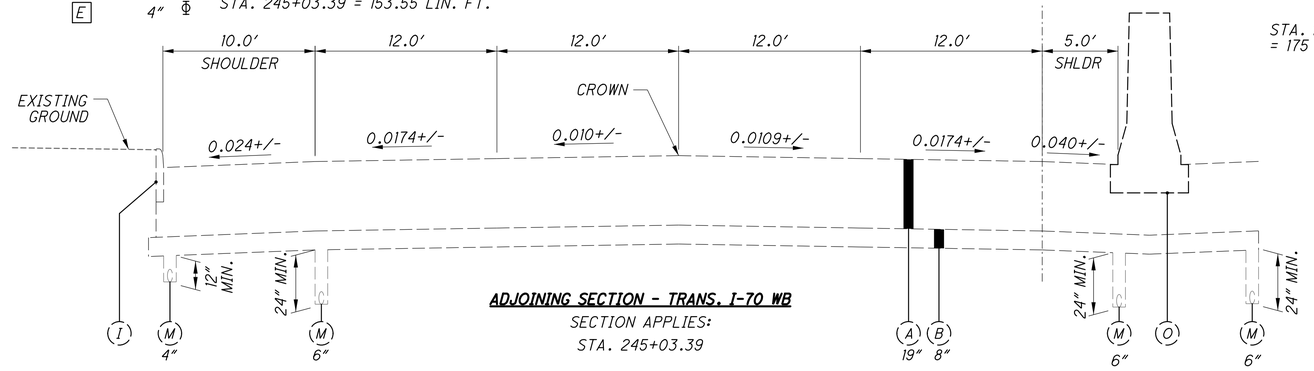

ADJOINING SECTION - TRANS. I-70 WB

SECTION APPLIES:

STA. 245+03.39

CALCULATED DWH
CHECKED TAZ

TRANSITIONAL PAVEMENT TYPICAL SECTIONS I-70 WB (E)
STA. 233+15.86 TO STA. 245+03.39

FRA-70-14.54

35
2317

ms consultants, inc.

PLOT.CEL

ms consultants, inc.
msconsultants.com

www.msconsultants.com
Ohio DOT Workspace
70\71 East Interchange 2E
PCF: 60-06634_2E_Columbus
ODF: ohdot1V8i

Batchplot Spec: \\msconsultants.com\files\production\03\60\06634_2E\standards\plotdrv\batchplt.spc
Pen Table: T:\temp\DWH\V8i_ms_stl.tbl
Plot Driver: \\msconsultants.com\files\Standards\ustn\ohdot1v8i\ms\plotting\PDF.pltdrv

Model: Sheet
Printed: 7/23/2018 @ 2:00:40 PM
File: N:\03\60\06634_2E\roadway\sheets\105322GY102.dgn
View: FENCE_VIEW1
By: dholl

34" x 22"

M STA. 214+56.80 TO STA. 215+14.43 = 12.0′
STA. 215+14.43 TO STA. 216+00.00 = 12.0′ - 13.53′

N STA. 214+56.80 TO STA. 215+22.09 = 6.17′
STA. 215+22.09 TO STA. 215+77.12 = 6.17′ - 4.00′
STA. 215+77.12 TO STA. 216+00.00 = 4.00′

O PAVEMENT SAWCUT IS LOCATED 1.0′ INSIDE EXISTING PAVEMENT FROM FACE OF EXISTING BARRIER AND CURB.

P STA. 214+56.80 TO STA. 215+62.89 = 1.92′ - 0.00′
STA. 215+62.89 TO STA. 216+00.00 = 0.00′

R ROUNDING APPLIES WHEN SUPER ELEVATION EXCEEDS 6%

* MILLING DEPTH/LEVELING COURSE DEPTH CHART

STATION	A*	B*	C*	D*
214+56.80	-0.27	-0.27	-0.27	-0.27
214+75.00	-0.11	-0.27	-0.28	-0.31
215+00.00	+0.08	-0.16	-0.37	-0.32
215+25.00	+0.26	-0.06	-0.26	-0.31
215+50.00	+0.41	+0.14	-0.13	-0.27
215+75.00	+0.59	+0.34	+0.06	-0.17
216+00.00	+0.73	+0.51	+0.21	-0.02

(+) = VARIABLE DEPTH ASPHALT CONCRETE (31)
(-) = MILLING DEPTH

Φ VARIABLE DEPTH AT WIDENING. MINIMUM DEPTH CALLED OUT ON LEGEND SHEET. INCREASED DEPTH TO MATCH BOTTOM OF EXISTING SUB-GRADE ELEVATION IF DEEPER.

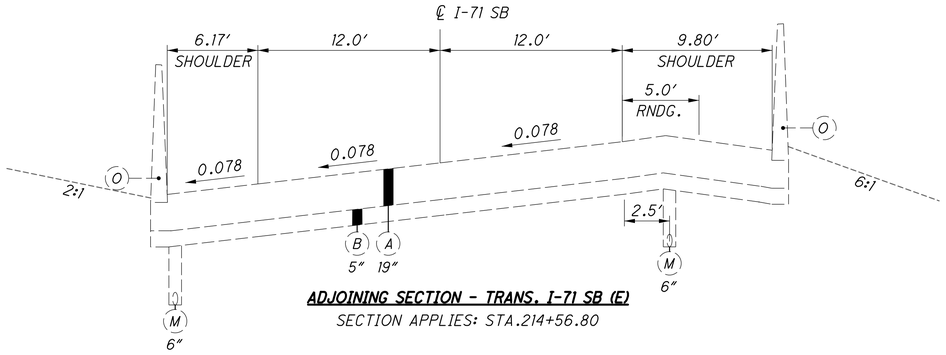

ADJOINING SECTION - TRANS. I-71 SB (E)
SECTION APPLIES: STA.214+56.80

NOTE: SEE SUPERELEVATION TABLES FOR TRANSITION STATIONING AND RATES.
FOR LEGEND. SEE SHEET 17

△ SEE UNDERDRAIN SUB-SUMMARY SHEETS FOR DEPTH AND QUANTITIES.

** OR RATE OF SUPER IF GREATER

CROSS REFERENCES	
SHT NO	DESCRIPTION
599-609	PLAN

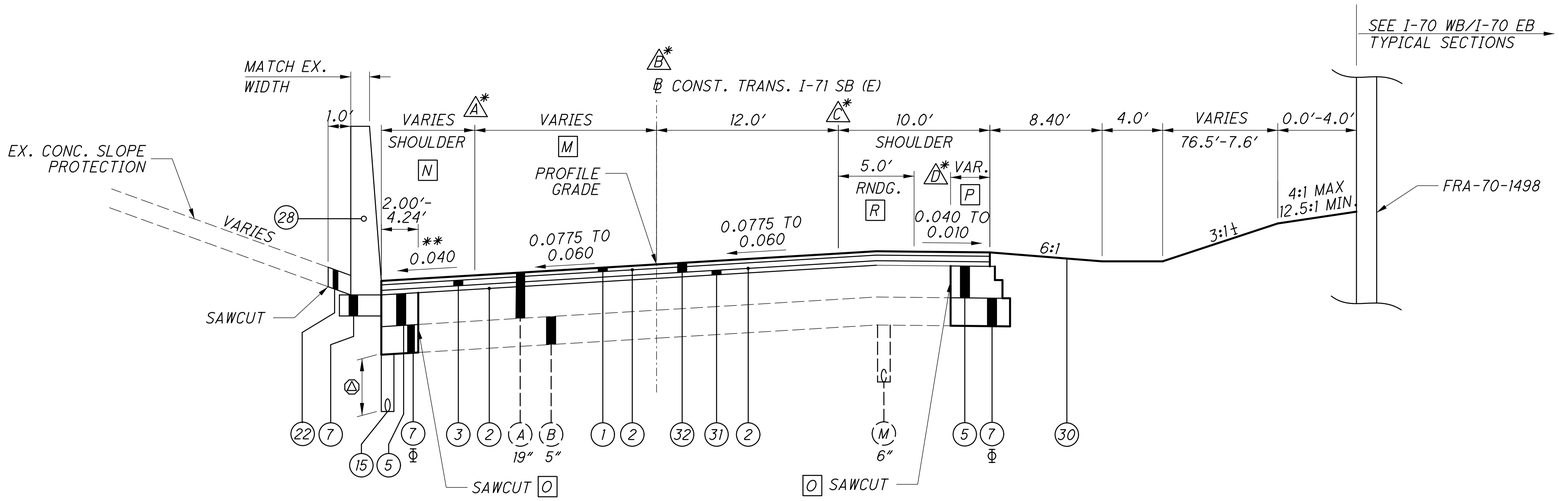

SUPERELEVATED SECTION - TRANS. I-71 SB (E)
SECTION APPLIES:

STA. 214+56.80 TO STA. 216+00.00 = 143.20 LIN. FT.
‡ UNLESS OTHERWISE SHOWN IN CROSS SECTION

CALCULATED | CHECKED

TRANSITIONAL PAVEMENT TYPICAL SECTIONS I-71 SB (E)
STA. 214+56.80 TO STA. 216+00.00

FRA-70-14.54

ms consultants, inc.

PLOT.CEL

ms consultants, inc.
msconsultants.com

www.msconsultants.com

Ohio DOT Workspace
70\71 East Interchange 2E

ODOT: ohdot\V8i
MCF: 60-06634_2E_Columbus

Batchplot Spec: \\msconsultants.com\files\production\03\60\06634_2E\standards\plotdir\batchplt.spc
Pen Table: \\msconsultants.com\files\Standards\usth\ohdot\V8i\ms\plotting\pen\V8i_ms_std.tbl
Plot Driver: \\msconsultants.com\files\Standards\usth\ohdot\v8i\ms\plotting\PDF.pltcfg

Model: Sheet @ 7:56:30 AM View: FENCE_VIEW1
Printed: 6/19/2018 By: jdouglas
File: \\msconsultants.com\files\Production\03\60\06634_2E\roadway\sheets\105322CY102A.dgn

34" x 22"

C STA. 216+00.00 TO STA. 216+69.63 = 13.53′ - 14.77′
STA. 216+69.63 TO STA. 219+15.52 = 14.77′
STA. 219+15.52 TO STA. 220+69.52 - 14.77′ - 12.00′
STA. 220+69.52 TO STA. 221+10.52 = 12.00′ - 11.25′

D UNDERDRAIN STOPS AND TURNS 45° RIGHT AT STA.220+69.52 AND THE INTO EOP U.D. @ STA. 220+82.65

E PAVEMENT TAPER
STA. 220+69.52 TO STA. 221+10.52 = 12.00′ - 11.25′

NOTE: SEE SUPERELEVATION TABLES FOR TRANSITION STATIONING AND RATES.
FOR LEGEND. SEE SHEET 17

△ SEE UNDERDRAIN SUB-SUMMARY SHEETS FOR DEPTH AND QUANTITIES.

** OR RATE OF SUPER IF GREATER

CROSS REFERENCES	
SHT NO	DESCRIPTION
599-609	PLAN

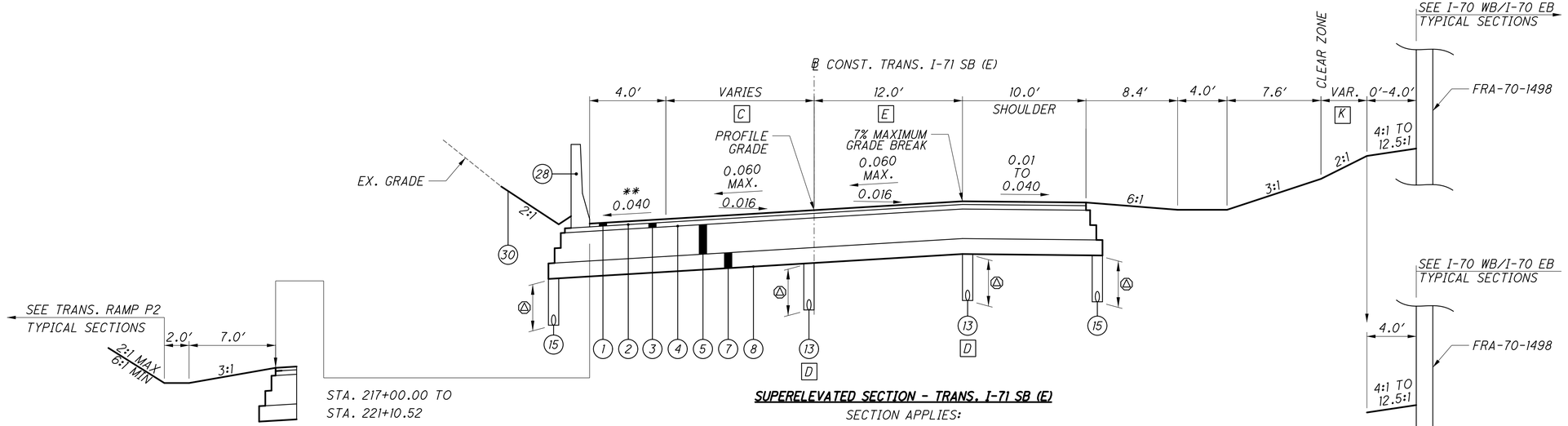

SUPERELEVATED SECTION - TRANS. I-71 SB (E)

SECTION APPLIES:

STA. 216+00.00 TO STA. 221+10.52 = 510.52 LIN. FT.
‡ UNLESS OTHERWISE SHOWN IN CROSS SECTION

F STA. 221+10.52 TO STA. 221+24.52 = 11.25′ - 11.0′
STA. 221+24.52 TO STA. 228+01.48 = 11.0′

H UNDERDRAIN STOPS AND AT STA. 227+50.00

I UNDERDRAIN STOPS AT STA. 225+20.29

J STA. 223+61.00 TO STA. 223+75.00 = 6.0′
STA. 223+75.00 TO STA. 224+25.00 = 6.0′ - 4.0′
STA. 224+25.00 TO STA. 228+01.48 = 4.0′

K SEE GRADING PLAN AND CROSSSECTIONS.

L TYPE D BARRIER AND MSE WALL END @ STA. 223+73.47

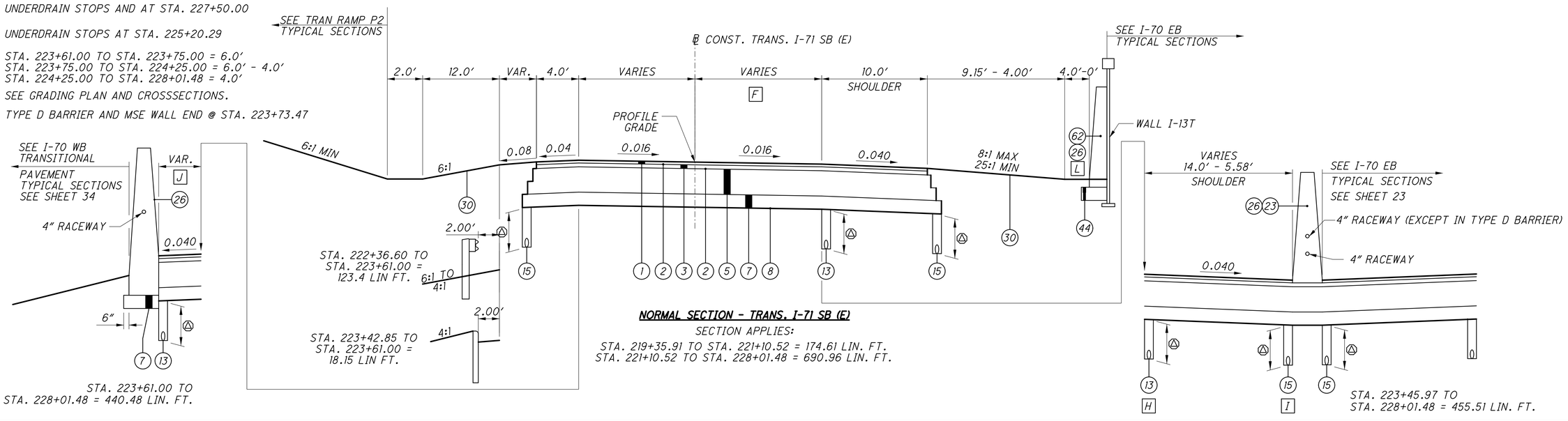

NORMAL SECTION - TRANS. I-71 SB (E)

SECTION APPLIES:

STA. 219+35.91 TO STA. 221+10.52 = 174.61 LIN. FT.
STA. 221+10.52 TO STA. 228+01.48 = 690.96 LIN. FT.

CALCULATED | CHECKED

TRANSITIONAL PAVEMENT TYPICAL SECTIONS I-71 SB (E)
STA. 216+00.00 TO STA. 228+01.48

FRA-70-14.54

36A
2317

PLOT.CEL

ms consultants, inc.
msconsultants.com

www.msconsultants.com

NOTE: SEE SUPERELEVATION TABLES FOR TRANSITION STATIONING AND RATES.

FOR LEGEND. SEE SHEET 17

SEE UNDERDRAIN SUB-SUMMARY SHEETS FOR DEPTH AND QUANTITIES.

CROSS REFERENCES	
SHT NO	DESCRIPTION
609, 612, 646 649,651	PLAN

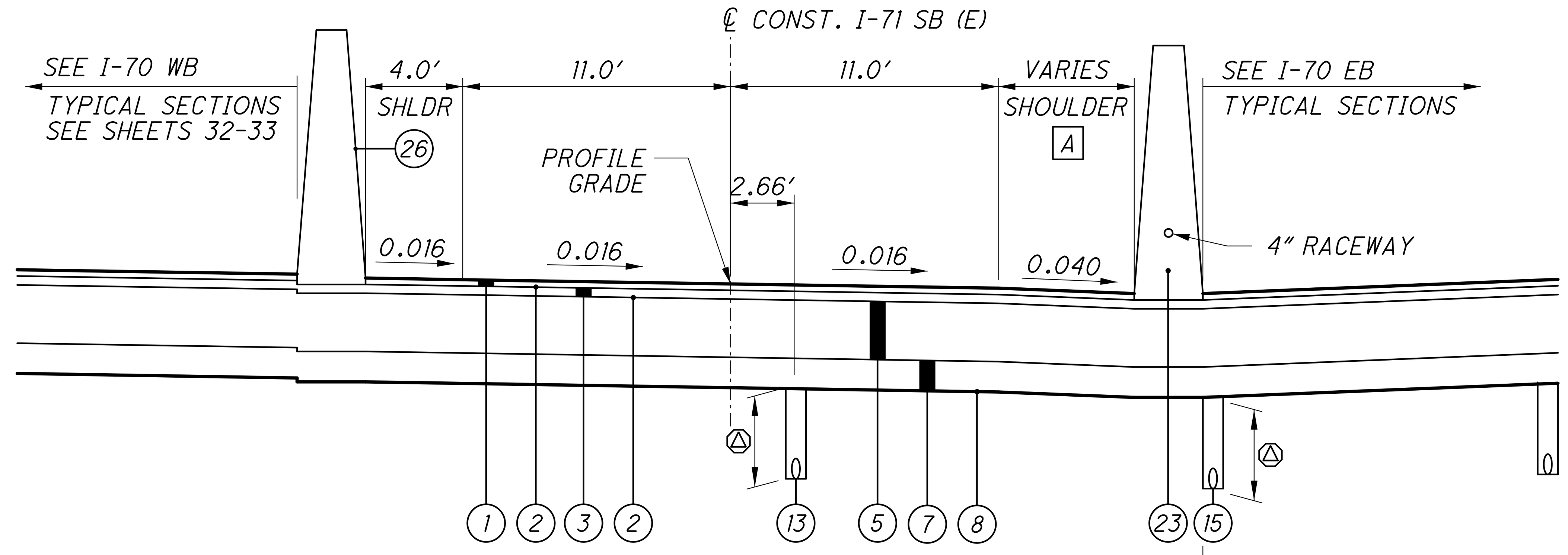

NORMAL SECTION - TRANS. I-71 SB (E)

SECTION APPLIES:

STA. 228+01.48 TO STA. 231+78.08 = 376.60 LIN. FT.

[A] STA. 228+01.48 TO STA. 228+36.39 = 5.58' -
STA. 228+36.39 TO STA. 228+76.39 = 5.58' - 4.0'
STA. 228+76.39 TO STA. 229+93.11 = 4.0'
STA. 229+93.11 TO STA. 230+33.05 = 4.0' - 5.58'
STA. 230+33.05 TO STA. 231+78.08 = 5.58' - 4.64'

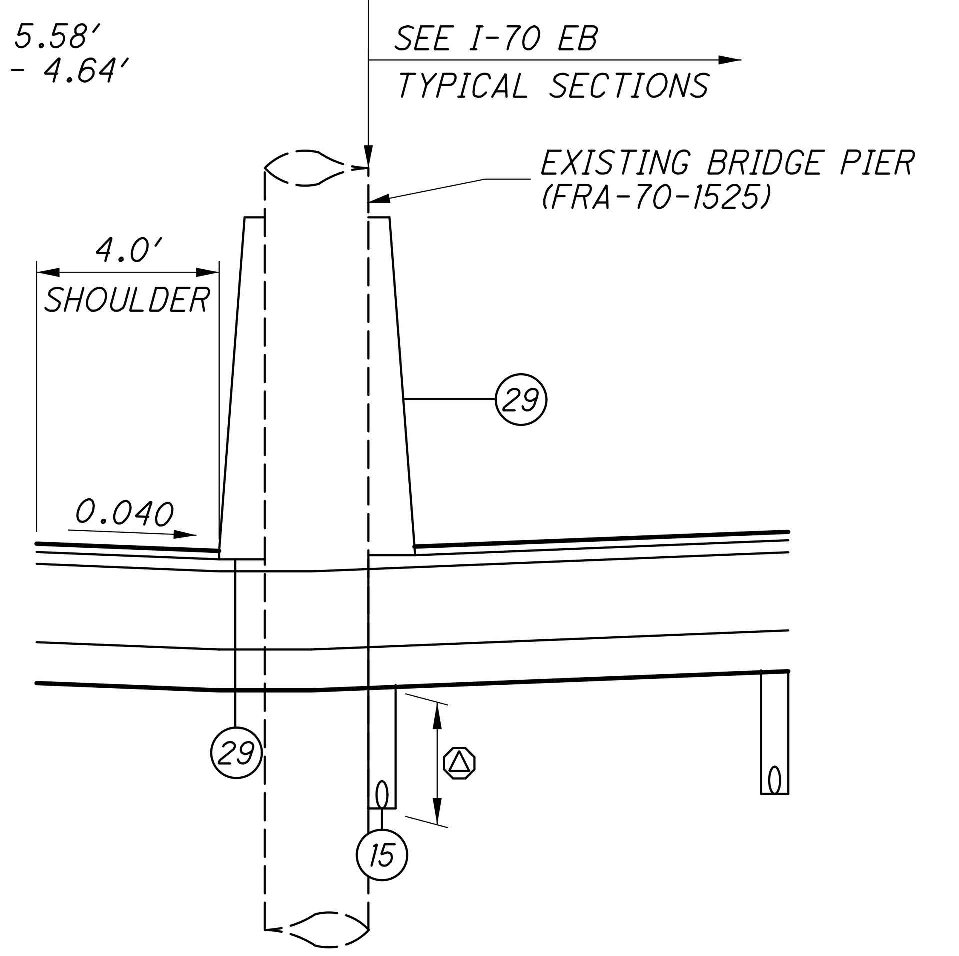

STA. 228+81.31 TO STA. 229+48.97 = 67.66 LIN. FT.

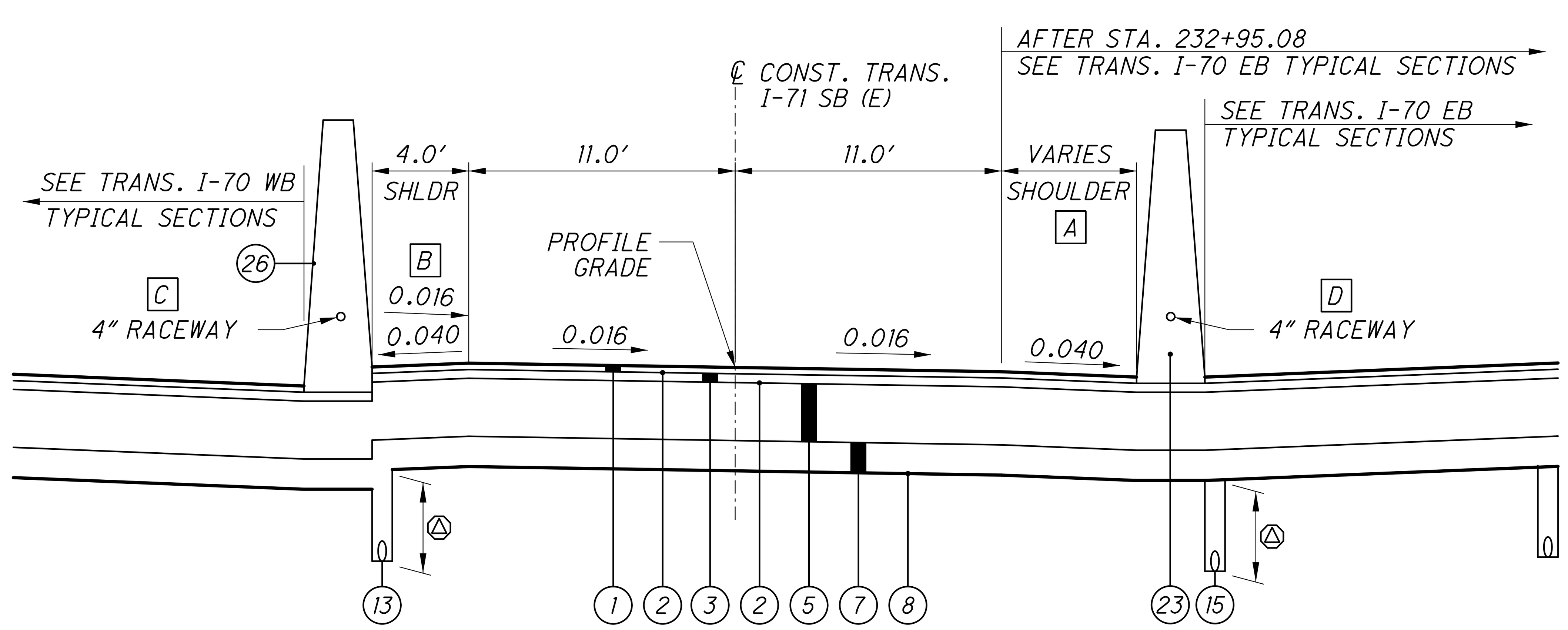

NORMAL SECTION - TRANS. I-71 SB (E)

SECTION APPLIES:

STA. 231+78.08 TO STA. 236+46.92 = 468.84 LIN. FT.

[A] STA. 231+78.35 TO STA. 232+51.46 = 4.68' - 4.0'
'STA. 232+51.46 TO STA. 232+95.15 = 4.0'

[B] SHOULDER CROSS SLOPE TRANSITION FROM STA. 231+78.08 TO STA. 231+91.74

[C] 1-4" RACEWAY STA. 232+29.23 TO STA. 236+46.92

[D] 1-4" RACEWAY STA. 231+78.08 TO STA. 232+29.23

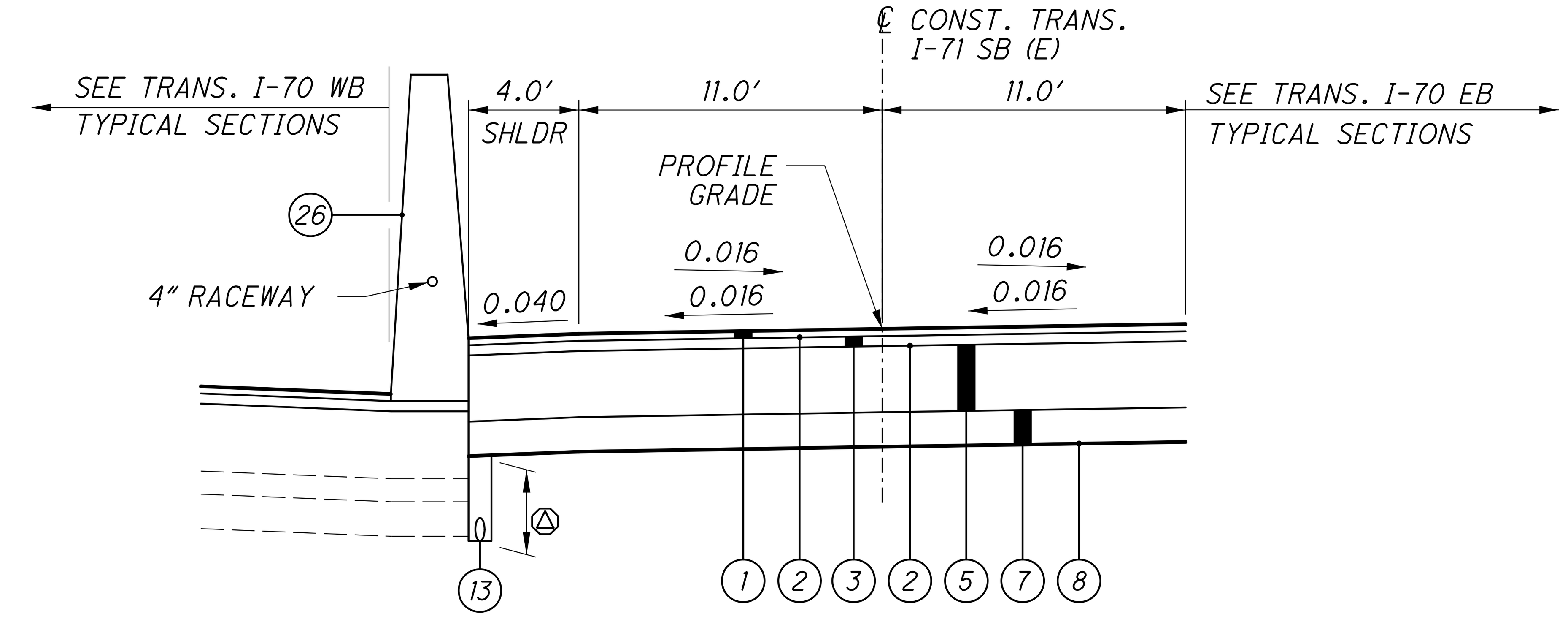

REVERSE SECTION - TRANS. I-71 SB (E)

SECTION APPLIES:

STA. 236+46.92 TO STA. 238+50.00 = 203.08 LIN. FT.

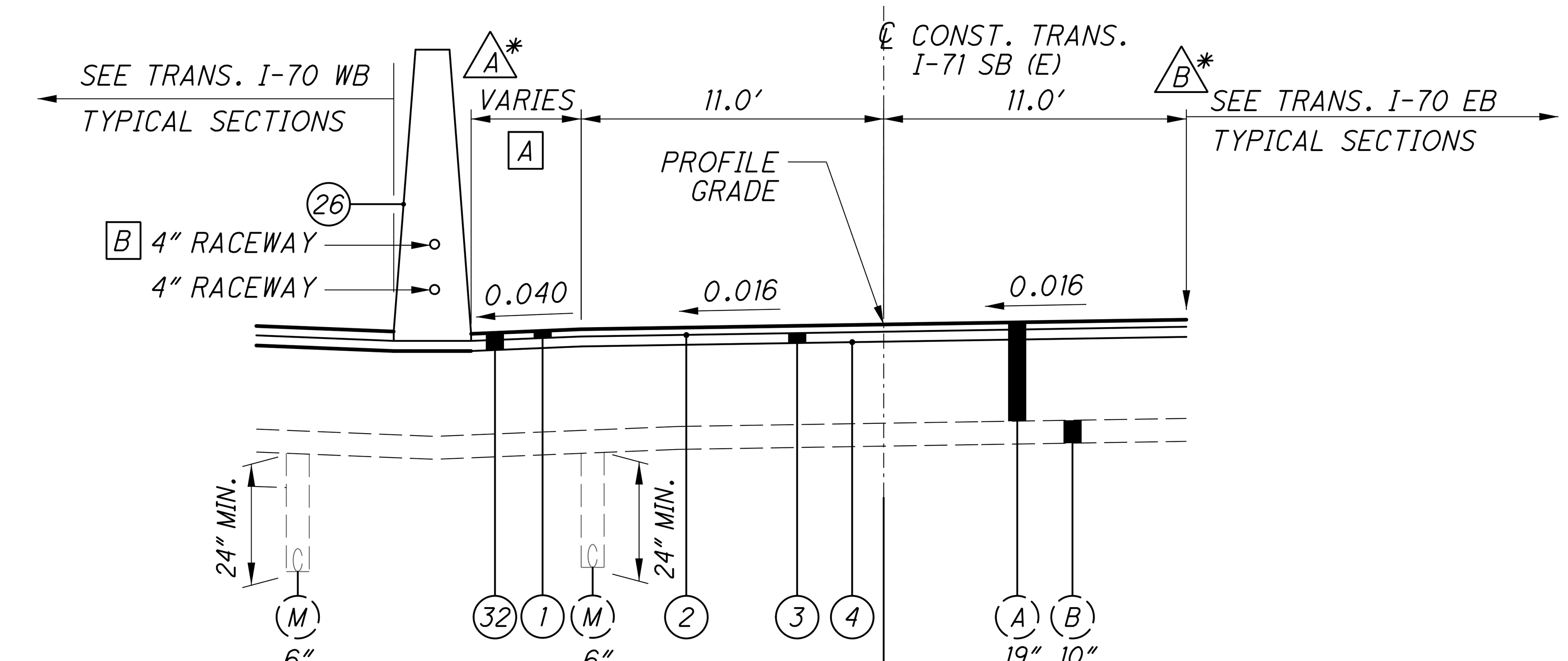

NORMAL SECTION - TRANS. I-71 SB (E)

SECTION APPLIES:

STA. 238+50.00 TO STA. 242+03.88 = 353.88 LIN. FT.

[A] STA. 238+70.00 TO STA. 239+68.08 = 4.0'
STA. 239+68.08 TO STA. 242+03.88 = 4.0' - 6.40'

[B] STA. 241+55.00 TO STA. 242+03.88

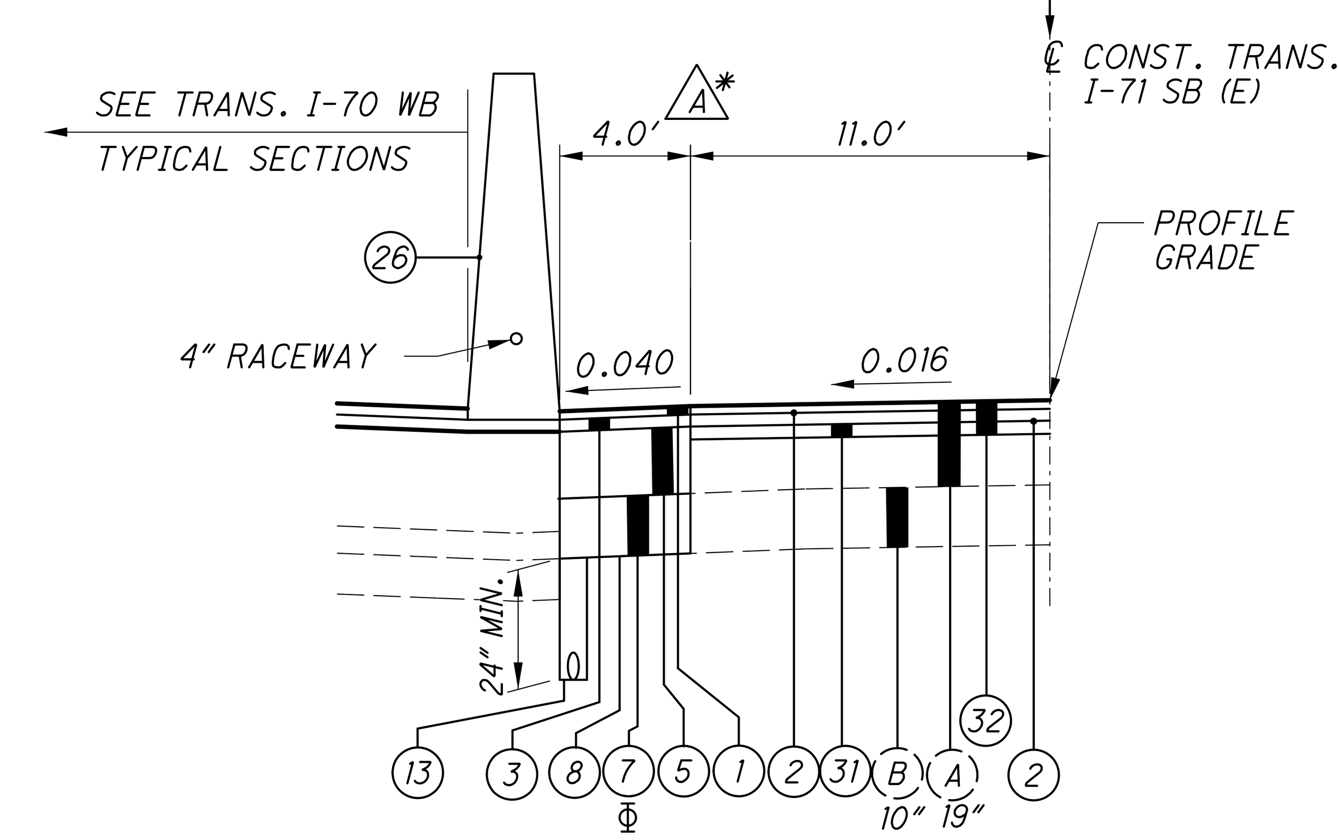

STA. 238+50.00 TO STA. 239+68.08 = 118.08 LIN. FT.

Φ VARIABLE DEPTH AT WIDENING. MINIMUM DEPTH CALLED OUT ON LEGEND SHEET. INCREASE DEPTH TO MATCH BOTTOM OF EXISTING SUB-GRADE ELEVATIONS IF DEEPER.

* MILLING DEPTHS/ LEVELING COURSE DEPTHS

STA.	A*	B*
238+50.00	+0.14	-0.03
239+00.00	+0.03	-0.11
239+50.00	-0.12	-0.19
240+00.00	-0.28	-0.27
240+50.00	-0.35	-0.33
241+00.00	-0.44	-0.37
241+50.00	-0.42	-0.37
242+00.00	-0.42	-0.36

(+) = VARIABLE DEPTH ASPHALT CONCRETE (31)

(-) = MILLING DEPTH

CALCULATED DWH
CHECKED TAZ

TYPICAL SECTIONS - TRANS. I-71 SB (E)
STA. 228+01.48 TO STA. 242+03.88

FRA-70-14.54

34" x 22"

Model: Sheet
Printed: 6/19/2018 @ 7:56:31 AM
File: N:\03\60\06634_2E\roadway\sheets\105322GY103.dgn
View: FENCE_VIEW1
By: jdouglas

ms consultants, inc.

PLOT.CEL

ms consultants, inc.
msconsultants.com

www.msconsultants.com
Ohio DOT Workspace
70\71 East Interchange 2E

1"
0.5"
0

PDF: ohdot\V8i
PCF: 60-06634_2E_Columbus

Batchplot Spec: \\msconsultants.com\files\production\03\60\06634_2E\standards\plotdrv\batchplt.spc
Pen Table: T:\temp\DWH\V8i_ms_std.tbl
Plot Driver: \\msconsultants.com\files\Standards\ustn\ohdot\v8i\ms\plotting\PDF.pltdrv

Model: Sheet
Printed: 7/23/2018 @ 2:01:33 PM
File: N:\03\60\06634_2E\roadway\sheets\105322GY105.dgn
View: FENCE_VIEW1
By: dhall

34" x 22"

[A] STA. 795+71.12 TO STA. 797+28.65 = 8.56′ - 18.08′
STA. 797+28.65 TO STA. 797+52.15 = 18.08′ - 18.74′

[B] STA. 797+52.15 TO STA. 798+52.15 = 2.0′
STA. 798+52.15 TO STA. 798+64.65 = 2.0′ - 2.75′
STA. 798+64.65 TO STA. 799+14.65 = 2.75′

[C] STA. 798+50.00 TO STA. 798+52.15 = 5.0′
STA. 798+52.15 TO STA. 798+64.65 = 5.0′ - 5.75′
STA. 798+64.65 TO STA. 799+14.65 = 5.75′
STA. 799+14.65 TO STA. 799+24.65 = 5.75′ - 5.0′
STA. 799+24.65 TO STA. 800+11.86 = 5.0′
STA. 800+11.86 TO STA. 800+26.39 = 5.0′ - 2.0′

[D] END GUARDRAIL AT STA. 799+14.65

[I] STA. 797+72.89 TO STA. 799+76.39 = 10.0′
STA. 799+76.39 TO STA. 800+26.39 = 10.0′ - 12.00′

[G] STA. 797+72.89 TO STA. 799+50.00 = 0.040 FT/FT
STA. 799+50.00 TO STA. 800+26.39 = 0.040 FT/FT -0.016 FT/FT

[H] STA. 797+72.89 TO STA. 799+50.00 = 5.0′
STA. 799+50.00 TO STA. 800+26.39 = 5.0′ - 4.47′

[F] STA. 797+72.89 TO STA. 799+50.00 = 10.00′
STA. 799+50.00 TO STA. 800+26.39 = 10.00′ - 20.00′

[G] STA. 795+71.12 TO STA. 796+00.00 = 12.00′ - 6.00′
STA. 796+00.00 TO STA. 796+50.00 = 6.00′ - 4.00′
STA. 796+50.00 TO STA. 797+00.00 = 4.00′ - 1.78′
STA. 797+00.00 TO STA. 797+50.00 = 1.78′ - 0.00′
STA. 797+50.00 TO STA. 798+50.00 = 0.00′

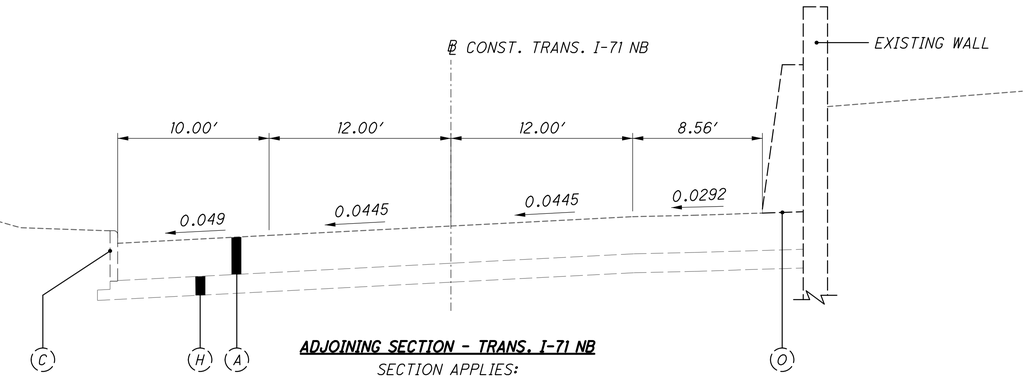

ADJOINING SECTION - TRANS. I-71 NB

SECTION APPLIES:

STA. 795+71.12

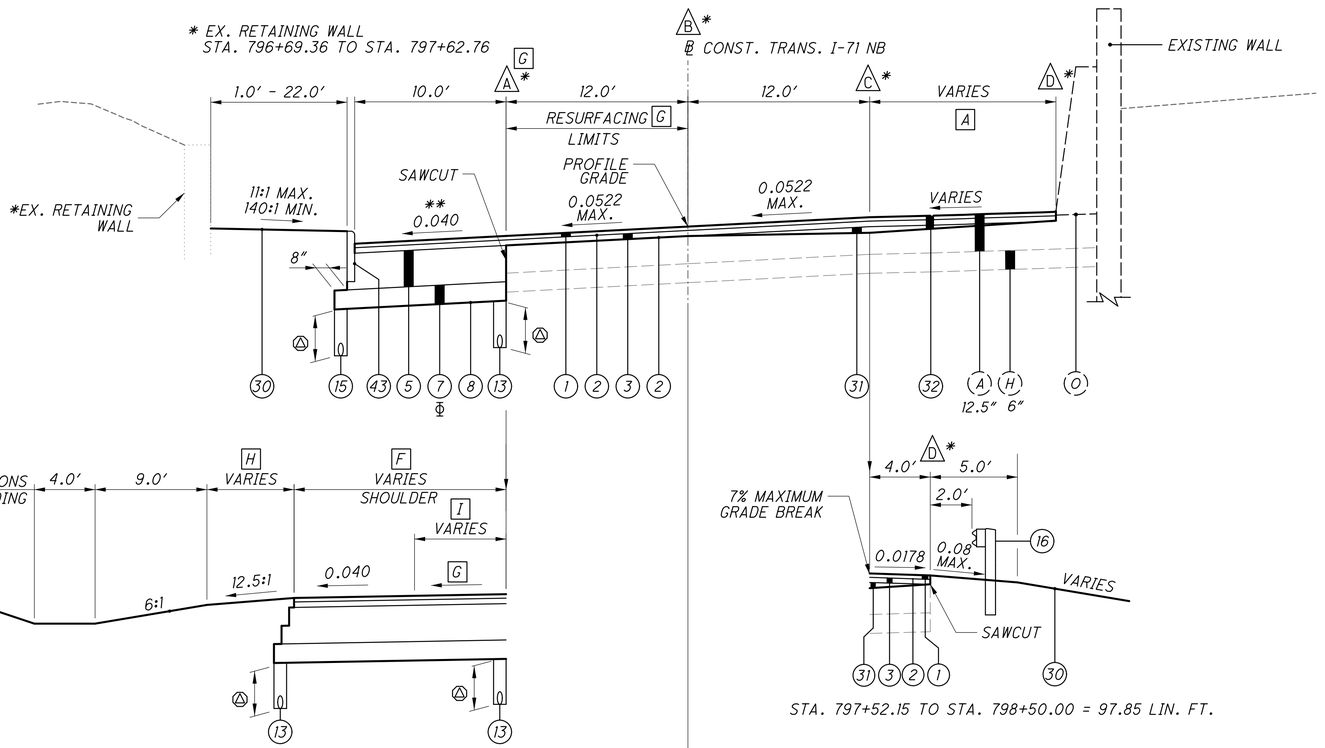

STA. 797+72.89 TO STA. 800+26.39 = 253.50 LIN. FT.

STA. 797+52.15 TO STA. 798+50.00 = 97.85 LIN. FT.

SUPERELEVATED SECTION - TRANS. I-71 NB

SECTION APPLIES:

STA. 795+71.12 TO STA. 800+26.39 = 455.27 LIN. FT.

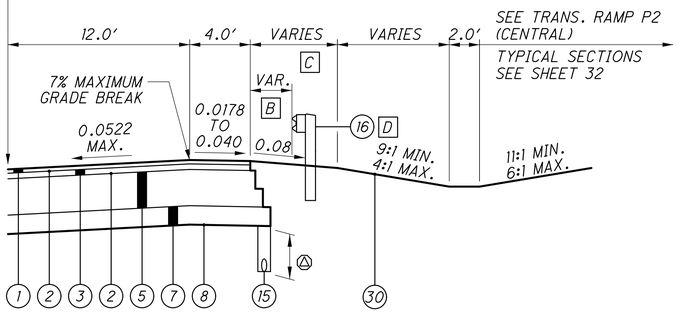

STA. 798+50.00 TO STA. 800+26.39 = 176.39 LIN. FT.

NOTE: SEE SUPERELEVATION TABLES FOR TRANSITION STATIONING AND RATES.

FOR LEGEND. SEE SHEET 17

△ SEE UNDERDRAIN SUB-SUMMARY SHEETS FOR DEPTH AND QUANTITIES.

** VARIES 0.040 OR RATE OF SUPER IF GREATER

Φ VARIABLE DEPTH AT WIDENING, MINIMUM DEPTH SPECIFIED ON LEGEND SHEET. INCREASE DEPTH TO MATCH BOTTOM OF EXISTING SUB-GRADE ELEVATION IF DEEPER.

* MILLING DEPTHS/LEVELING COURSE DEPTH CHART

STATION	△ A *	△ B *	△ C *	△ D *
795+71.12	-0.27	-0.27	-0.27	-0.27
796+00.00	-0.33	-0.25	-0.12	-0.27
796+50.00	-0.31	-0.23	-0.03	-0.27
797+00.00	-0.21	-0.17	+0.07	-0.27
797+50.00	-	-0.04	+0.22	-0.27
798+00.00	-	+0.14	+0.36	+0.15
798+50.00	-	+0.24	+0.45	+0.21

(+) = VARIABLE DEPTH ASPHALT CONCRETE (31)

(-) = MILLING DEPTH

CROSS REFERENCES	
SHT NO	DESCRIPTION
602, 605	PLAN

CALCULATED DWH
CHECKED TAZ

TRANSITIONAL PAVEMENT TYPICAL SECTIONS I-71 NB
STA. 795+71.12 TO STA. 800+26.39

FRA-70-14.54

ms consultants, inc.

NOTE: SEE SUPERELEVATION TABLES FOR TRANSITION STATIONING AND RATES.

FOR LEGEND. SEE SHEET 17

(triangle symbol) SEE UNDERDRAIN SUB-SUMMARY SHEETS FOR DEPTH AND QUANTITIES.

CROSS REFERENCES

SHT NO	DESCRIPTION
605-615	PLAN

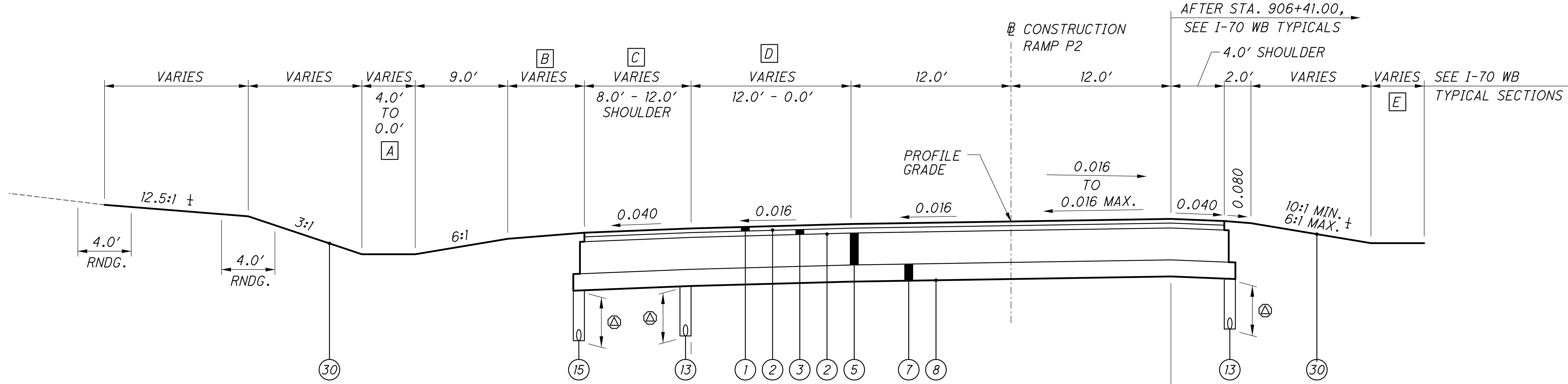

NORMAL SECTION - RAMP P2

SECTION APPLIES:

STA. 900+26.40 TO STA. 907+12.50 = 686.10 LIN. FT.

‡ UNLESS OTHERWISE SHOWN IN CROSS SECTIONS

A STA. 900+26.40 TO STA. 903+50.00 = 4.0'
STA. 903+50.00 TO STA. 903+71.00 = 4.0' - 0.0'

B STA. 901+00.00 TO STA. 900+85.84 = 4.47' - 0.0'

C STA. 900+26.40 TO STA. 902+36.49 = 8.0'
STA. 902+36.49 TO STA. 903+36.49 = 8.0' - 12.0'
STA. 903+36.49 TO STA. 903+71.00 = 12.0'

D STA. 900+26.40 TO STA. 902+36.49 = 12.0'
STA. 902+36.49 TO STA. 903+36.49 = 12.0' - 0.0'
STA. 903+36.49 TO STA. 907+12.50 = 0.0'

E STA. 900+26.40 TO STA. 903+00.00 = 2.0'
STA. 903+00.00 TO STA. 903+75.00 = 2.0' - 4.0'
STA. 903+75.00 TO STA. 904+25.00 = 4.0'
STA. 904+25.00 TO STA. 904+50.00 = 4.0' - 0.0'

F STA. 904+32.02 TO STA. 904+99.63 = 6" TOP
STA. 904+99.63 TO STA. 905+62.10 = 12" TOP

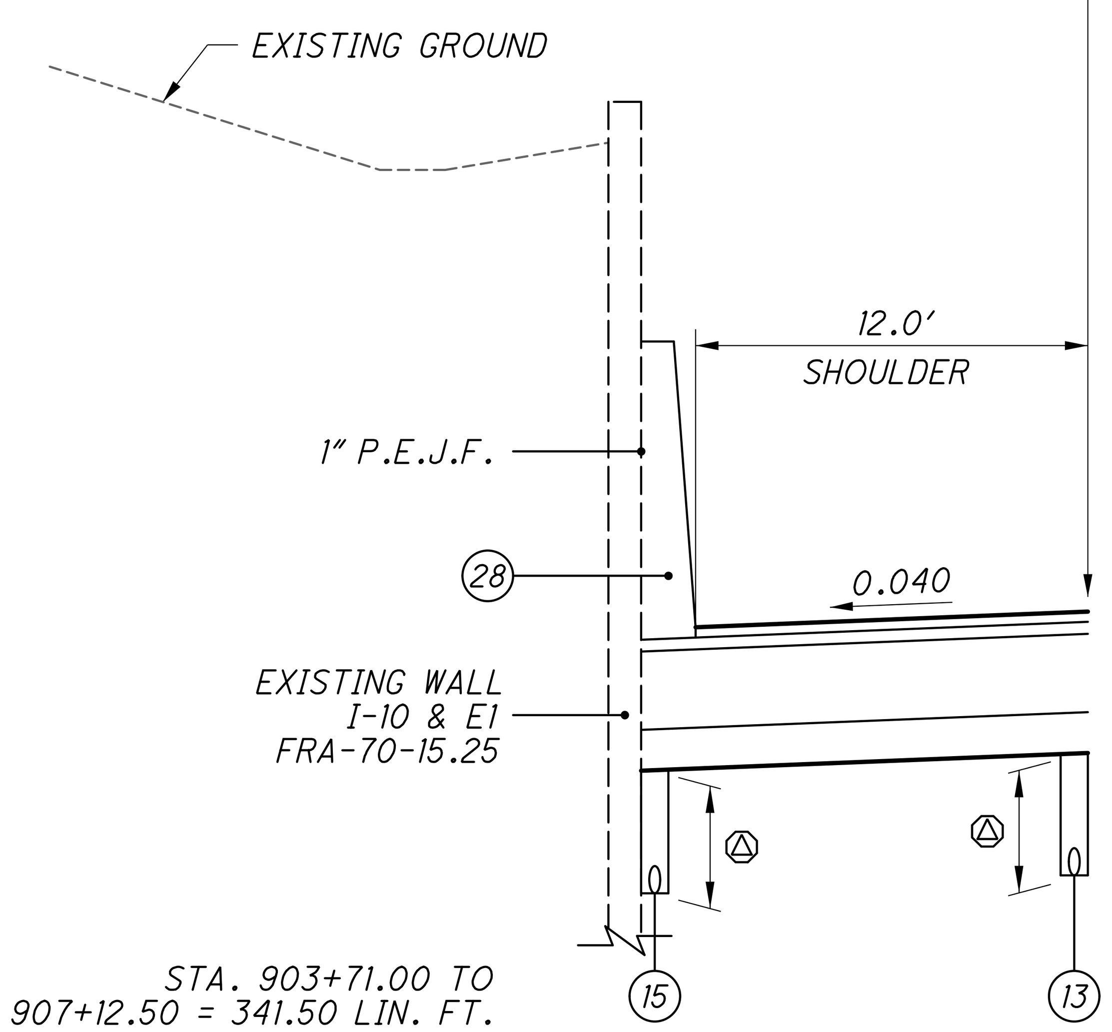

STA. 903+71.00 TO STA. 907+12.50 = 341.50 LIN. FT.

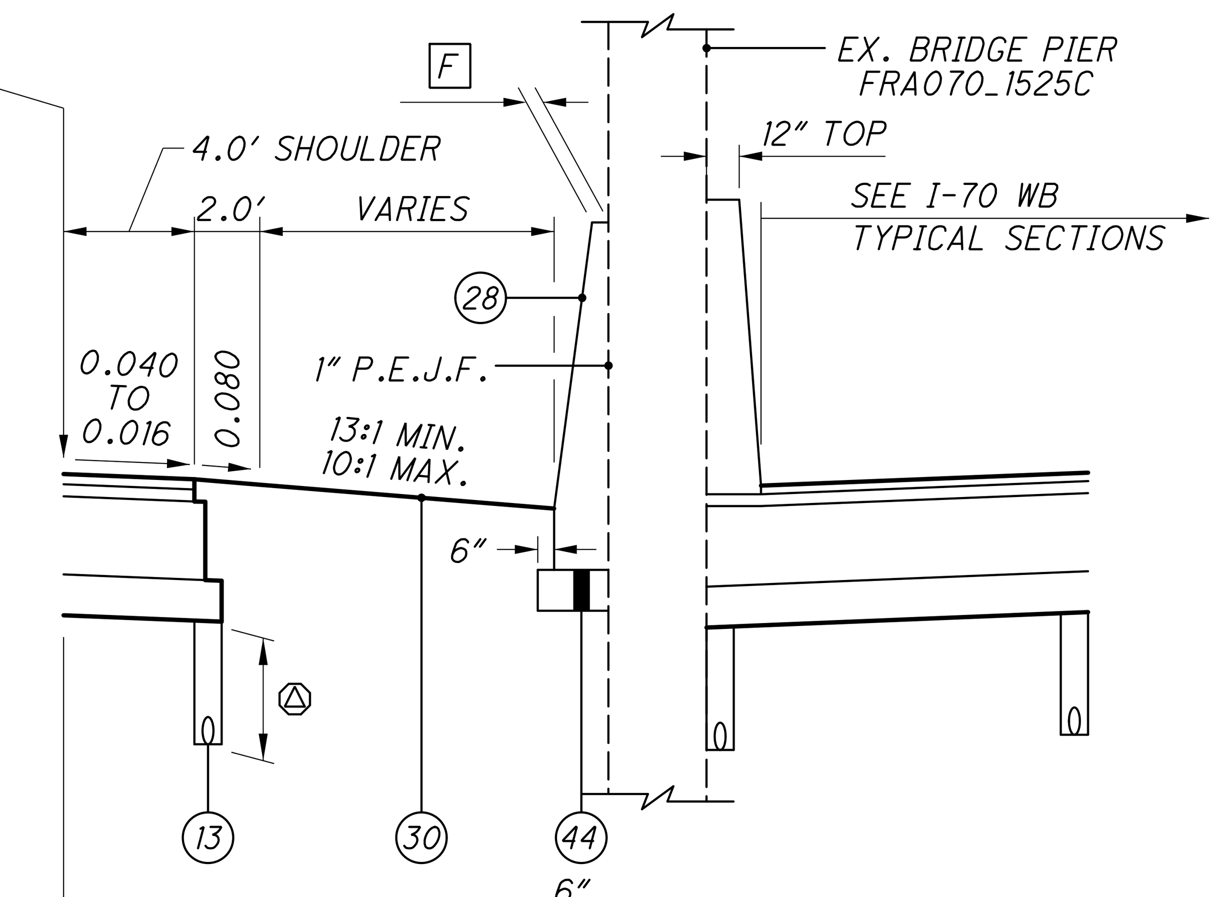

STA. 904+32.02 TO STA. 905+62.10 = 130.08 LIN. FT.

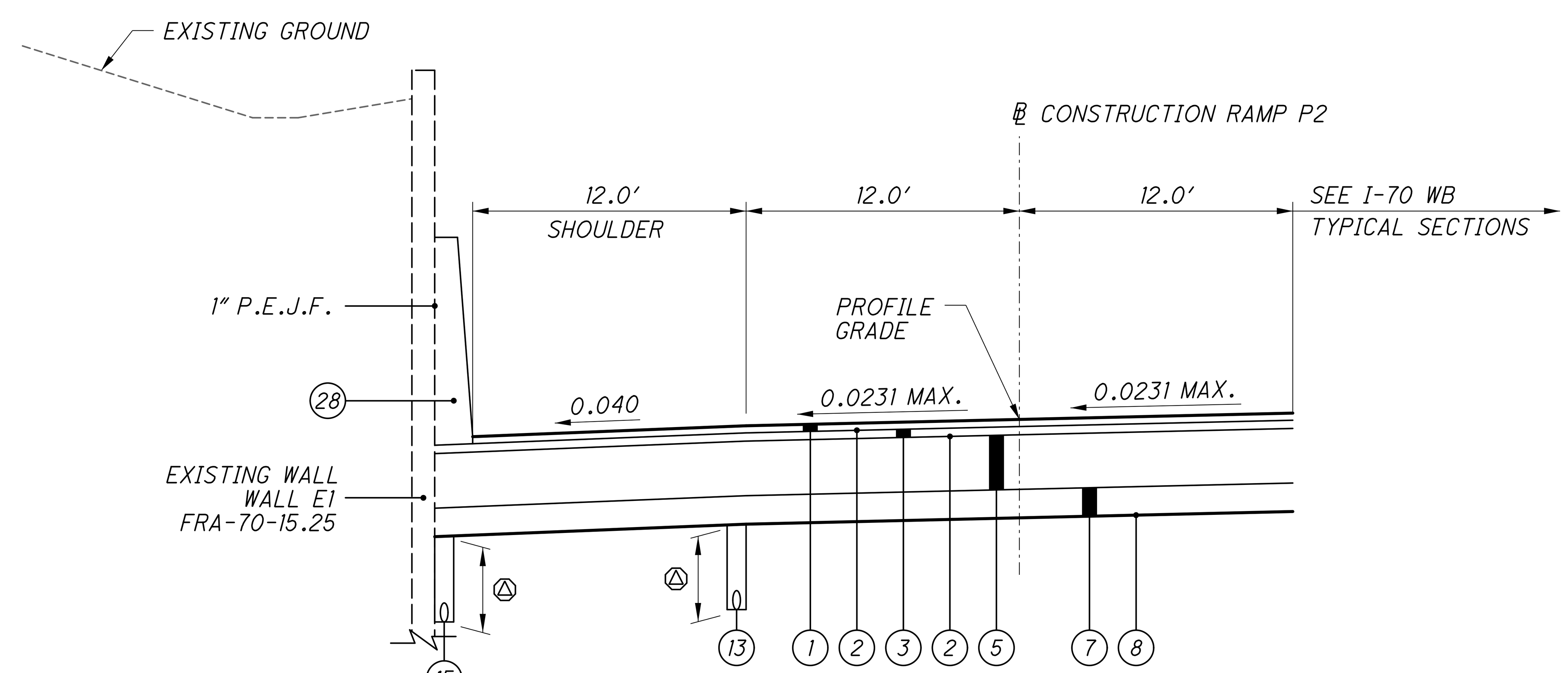

SUPERELEVATION SECTION - RAMP P2

SECTION APPLIES:

STA. 907+12.50 TO STA. 907+33.78 = 21.28 LIN. FT.

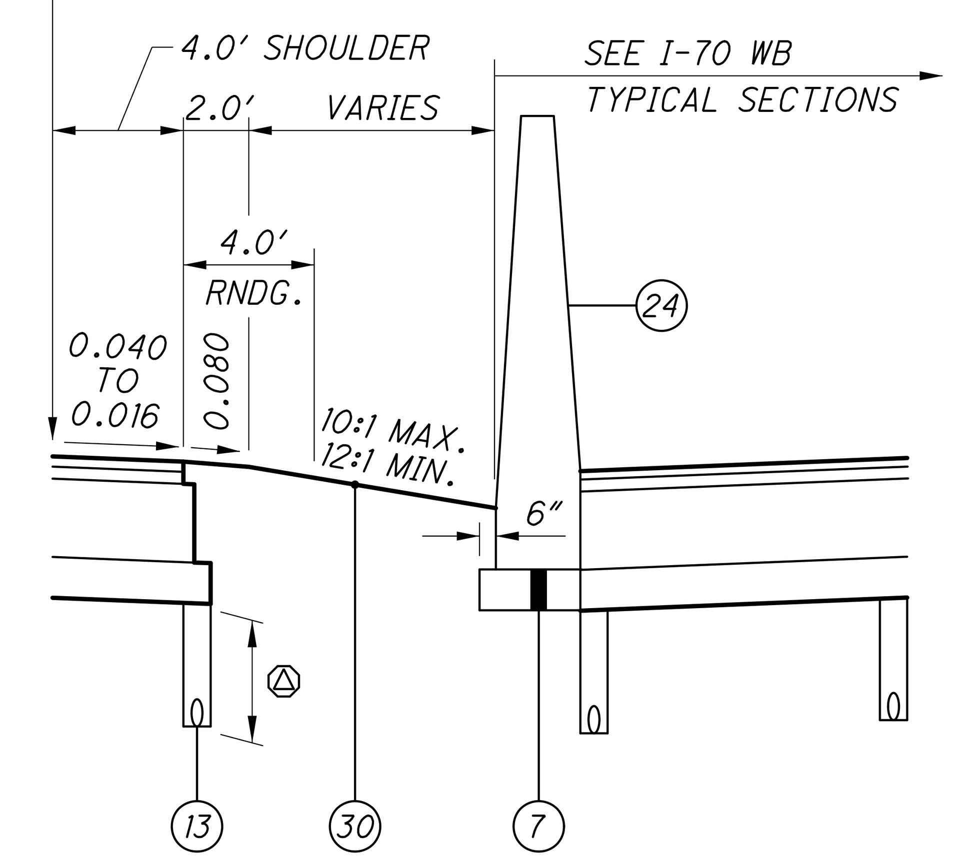

STA. 905+62.10 TO STA. 906+41.00 = 78.90 LIN. FT.

TYPICAL SECTIONS - RAMP P2
STA. 900+26.40 TO STA. 907+33.78

FRA-70-14.54

CALCULATED DWH
CHECKED TAZ

ms consultants, inc.
msconsultants.com
www.msconsultants.com

Model: Sheet View: FENCE_VIEW1
Printed: 6/19/2018 @ 7:56:35 AM By: jdouglas
File: N:\03\60\06634_2E\roadway\sheets\105322GY060.dgn

34" x 22"

PLOT.CEL

ms consultants, inc.
rmsconsultants.com

www.rmsconsultants.com

Batchplot Spec: \\rmsconsultants.com\files\production\03\60\06634_2E\standards\ohdot\batchplot.pdf
Pen Table: \\rmsconsultants.com\files\Production\03\60\06634_2E\deliverables\2018_06_20 ACEC\pentable.ctb
Plot Driver: \\rmsconsultants.com\files\Standards\usth\ohdot\v8i\rms\plotting\PDF.pltcfg

Model: Sheet
Printed: 6/19/2018 @ 7:56:36 AM
File: N:\03\60\06634_2E\roadway\sheets\105322G1061.dgn
View: FENCE_VIEW1
By: jdouglas

34" x 22"

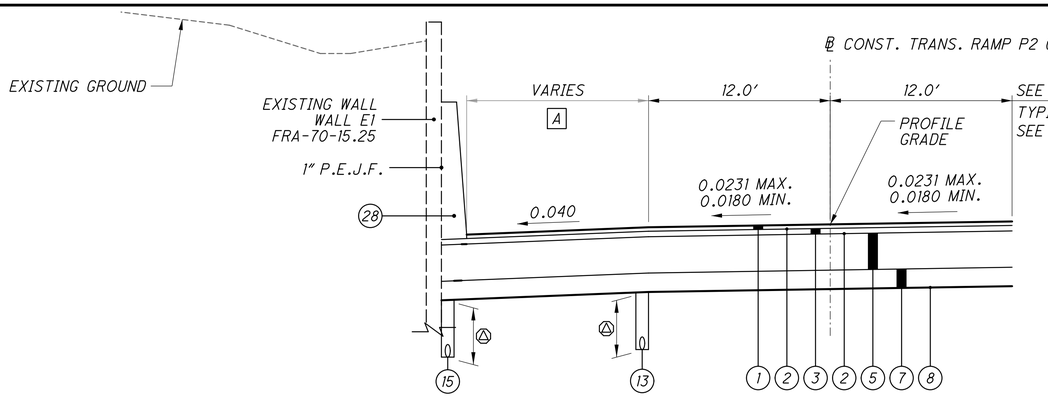

SUPERELEVATED SECTION - TRANS. RAMP P2 (E)

SECTION APPLIES:

STA. 57+33.78 TO STA. 57+54.85 = 21.07 LIN. FT.
STA. 57+90.44 TO STA. 61+97.37 = 406.93 LIN. FT.

NOTE: SEE SUPERELEVATION TABLES FOR TRANSITION STATIONING AND RATES.

FOR LEGEND. SEE SHEET 17

Δ SEE UNDERDRAIN SUB-SUMMARY SHEETS FOR DEPTH AND QUANTITIES.

CROSS REFERENCES	
SHT NO	DESCRIPTION
612, 649	PLAN

A STA. 57+33.78 TO STA. 57+54.85 = 12.0' - 12.41'
STA. 57+90.44 TO STA. 58+33.38 = 13.28' - 14.49'
STA. 58+33.38 TO STA. 61+97.37 = 10.0'

B STA. 58+67.48 TO STA. 59+67.18 = 5.0'
STA. 59+67.18 TO STA. 60+09.01 = 5.0' - 0.0'
STA. 60+09.01 TO STA. 61+97.37 = 0.0'

C STA. 58+67.48 TO STA. 58+91.95 = 0.0'
STA. 58+91.95 TO STA. 59+17.03 = 0.0' - 2.0'
STA. 59+17.03 TO STA. 59+68.69 = 2.0'

D GUARDRAIL: STA 58+67.48 TO STA. 59+68.69

E STA. 58+67.48 TO STA. 58+82.46 = 2.0'
STA. 58+82.46 TO STA. 58+97.49 = 2.0' - 4.0'
STA. 58+97.49 TO STA. 59+02.51 = 4.0'
STA. 59+02.51 TO STA. 60.00 = 4.0' - 0.0'
STA. 60+00.00 TO STA. 60+25.00 = 0.0' - 4.0'
STA. 60+25.00 TO STA. 61+97.37 = 4.0'

F STA. 61+97.37 TO STA. 63+71.63 = 6.00'

G STA. 58+33.38 TO STA. 58+47.14 = 0.0' - 2.0'
STA. 58+47.14 TO STA. 58+67.48 = 2.0'

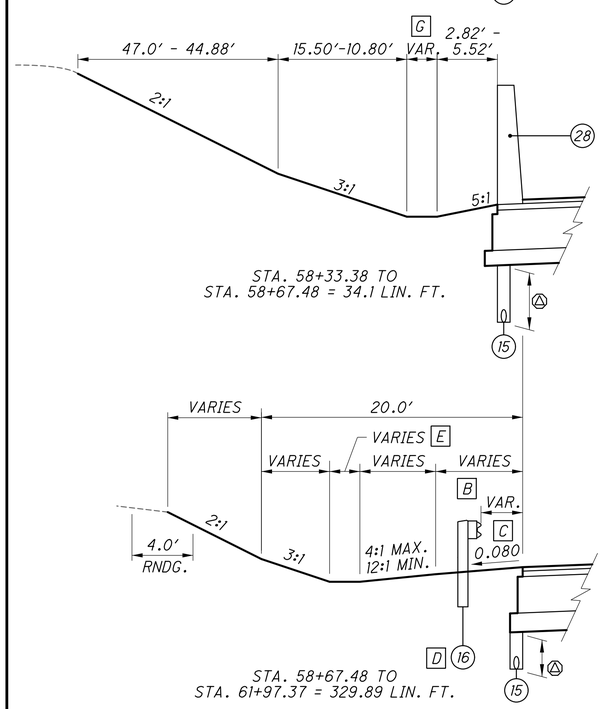

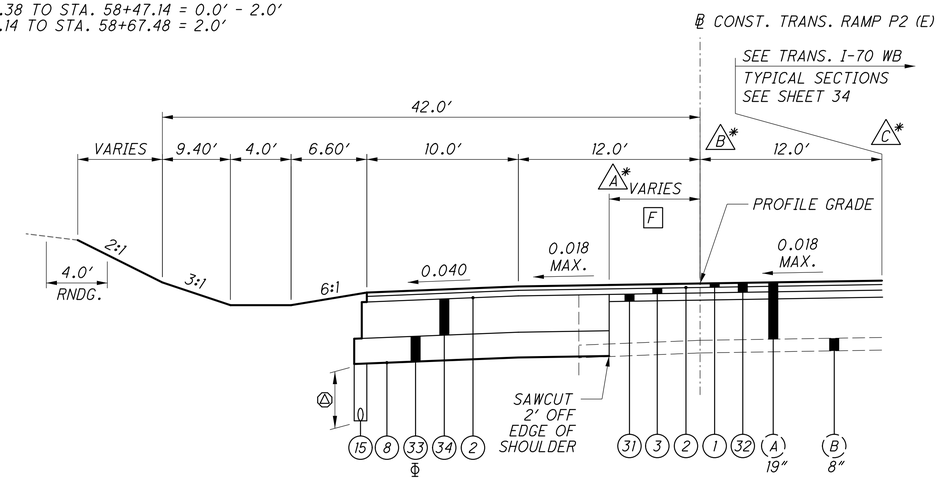

SUPERELEVATED SECTION - TRANS. RAMP P2 (E)

SECTION APPLIES:

STA. 61+97.37 TO STA. 63+71.63 = 174.26 LIN. FT.

Φ VARIABLE DEPTH AT WIDENING, MINIMUM DEPTH SPECIFIED ON LEGEND SHEET. INCREASE DEPTH TO MATCH BOTTOM OF EXISTING SUB-GRADE ELEVATION IF DEEPER.

* MILLING DEPTHS/ LEVELING COURSE DEPTH

STA.	A*	B*	C*
61+97.37	+0.18	+0.12	+0.03
62+00.00	+0.22	+0.12	+0.03
62+50.00	+0.21	+0.06	+0.06
63+00.00	+0.18	+0.08	+0.13
63+50.00	+0.13	+0.09	+0.14

(+) = VARIABLE DEPTH ASPHALT CONCRETE (31)

(-) = MILLING DEPTH

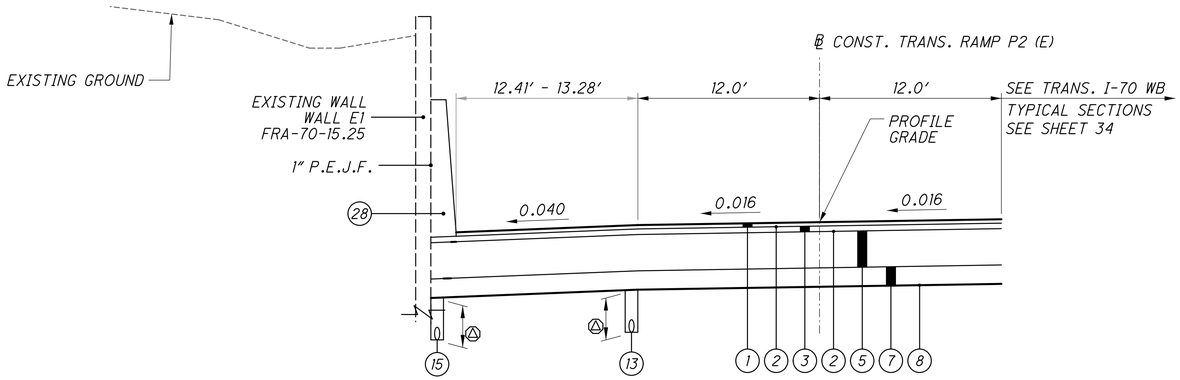

NORMAL SECTION - TRANS. RAMP P2 (E)

SECTION APPLIES:

STA. 57+54.85 TO STA. 57+90.44 = 35.59 LIN. FT.

CALCULATED DWH
CHECKED TAZ

TYPICAL SECTIONS - TRANS. RAMP P2 (E)
STA. 57+33.78 TO STA. 63+71.63

FRA-70-14.54

ms consultants, inc.

PLOT.CEL

ms consultants, inc.
msconsultants.com

Ohio DOT Workspace
70\71 East Interchange 2E
www.msconsultants.com

Batchplot Spec: \\msconsultants.com\files\production\03\60\06634_2E\standards\plotdrv\batchplt.spc
Pen Table: \\msconsultants.com\files\Standards\usitn\ohdot\V8i\ms\plotting\pen\V8i_ms_std.tbl
Plot Driver: \\msconsultants.com\files\Standards\usitn\ohdot\V8i\ms\plotting\PDF.pltcfg
PLOT: ohdot\V8i
PLOT: 60-06634_2E_Columbus

Model: Sheet
Printed: 7/23/2018 @ 2:12:21 PM
File: N:\03\60\06634_2E\roadway\sheets\05322C7045.dgn
View: FENCE_VIEW1
By: dhall

34" x 22"

CROSS REFERENCES	
SHT NO	DESCRIPTION
582-585 616-631	PLAN

NOTE: SEE SUPERELEVATION TABLES FOR TRANSITION STATIONING AND RATES.

FOR LEGEND. SEE SHEET 17

△ SEE UNDERDRAIN SUB-SUMMARY SHEETS FOR DEPTH AND QUANTITIES.

* OR RATE OF SUPER IF GREATER

◊ FRA-AFRICENTRIC RETAINING WALL, PART 2, TO BE CONSTRUCTED WITH FRA-70-14.48

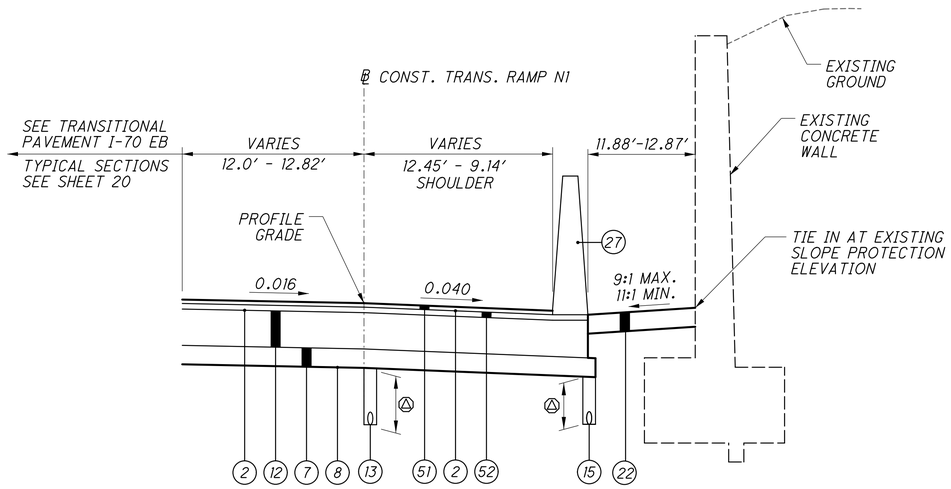

NORMAL SECTION - TRANS. RAMP N1

SECTION APPLIES:

STA. 960+99.32 TO STA. 961+82.00 = 82.68 LIN. FT.
‡ UNLESS OTHERWISE SHOWN IN CROSS SECTIONS

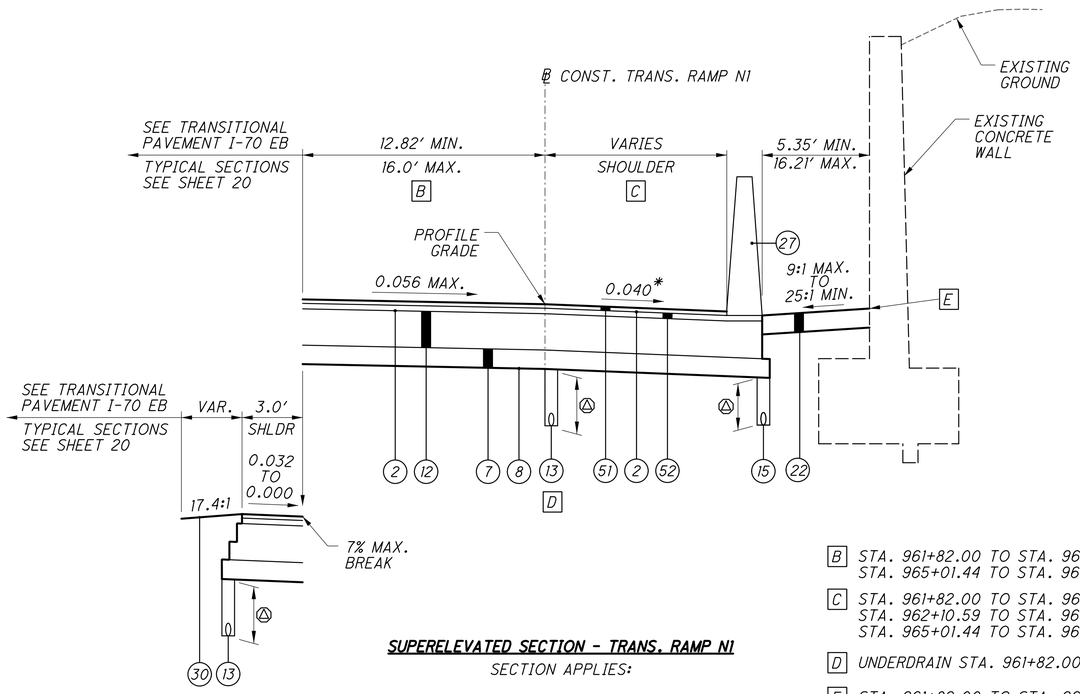

STA. 965+01.44 TO
STA. 965+07.83 = 6.21 LIN. FT.

SUPERELEVATED SECTION - TRANS. RAMP N1

SECTION APPLIES:

STA. 961+82.00 TO STA. 965+07.83 = 325.83 LIN. FT.
‡ UNLESS OTHERWISE SHOWN IN CROSS SECTIONS

B STA. 961+82.00 TO STA. 965+01.44 = 12.82′ - 16.0′
STA. 965+01.44 TO STA. 965+07.83 = 16.0′

C STA. 961+82.00 TO STA. 962+10.59 = 9.14′ - 8.0′
STA. 962+10.59 TO STA. 965+01.44 = 8.0′
STA. 965+01.44 TO STA. 965+07.83 = 8.0′ - 7.74′

D UNDERDRAIN STA. 961+82.00 TO STA. 965+01.44

E STA. 961+82.00 TO STA. 963+66.28
TIE PROP. SLOPE PROTECTION IN AT SAME ELEVATION AS EXISTING SLOPE PROTECTION.

STA. 963+66.28 TO STA. 965+07.83
HOLD 25:1 SLOPE ON SLOPE PROTECTION FROM TYPE B BARRIER.

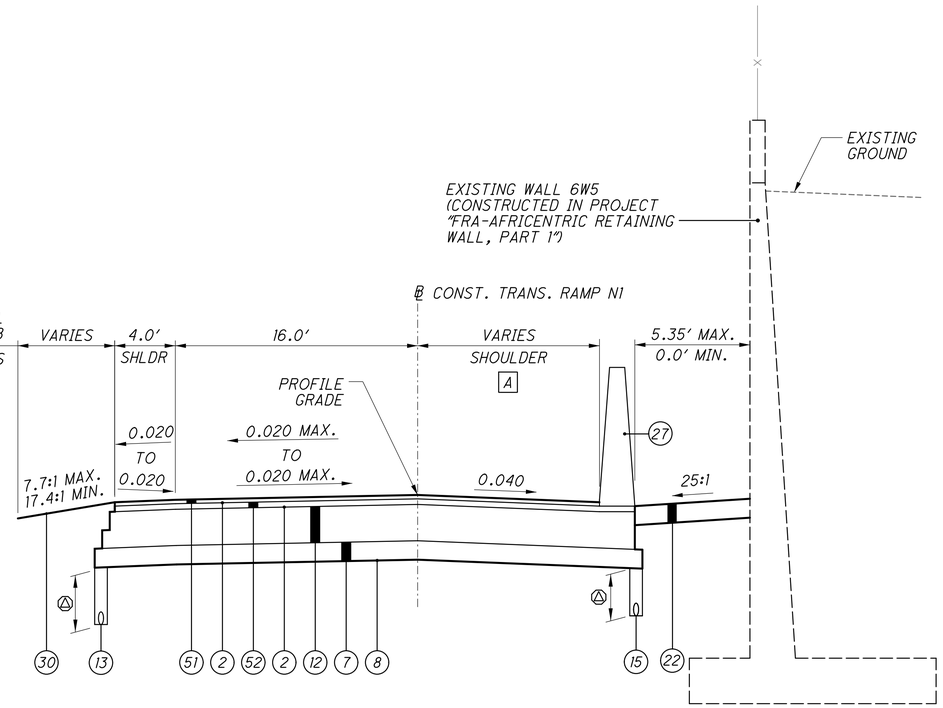

SUPERELEVATED SECTION - TRANS. RAMP N1

SECTION APPLIES:

STA. 965+07.83 TO STA. 966+99.85 = 192.02 LIN. FT.

A STA. 965+07.83 TO STA. 965+51.44 = 7.74′ - 6.00′
STA. 965+51.44 TO STA. 966+99.85 = 6.00′

(SEE PROJECT, FRA-AFRICENTRIC RETAINING WALL STA. 962+99.87 TO STA. 965+07.83 - PART 1)

CALCULATED DWH
CHECKED TAZ

TRANSITIONAL PAVEMENT TYPICAL SECTIONS RAMP N1

STA. 960+99.32 TO STA. 966+99.85

FRA-70-14.54

ms consultants, inc.

PLOT.CEL

ms consultants, inc.
msconsultants.com

www.msconsultants.com

Ohio DOT Workspace
70\71 East Interchange 2E

Batchplot Spec: \\msconsultants.com\files\production\03\60\06634_2E\standards\plotdr\batchplt.spc
Pen Table: \\msconsultants.com\files\Standards\ustn\ohdot\V8i\ms\plotting\pen\V8i_ms_std.tbl
Plot Driver: \\msconsultants.com\files\Standards\ustn\ohdot\V8i\ms\plotting\PDF.pltcfg
PDF: ohdotV8i
PDF: 60-06634_2E_Columbus

Model: Sheet
Printed: 7/23/2018 @ 2:17:16 PM
File: N:\03\60\06634_2E\roadway\sheets\1053226Y047.dgn
View FENCE_VIEW1
By: dhall

34" x 22"

NOTE: SEE SUPERELEVATION TABLES FOR TRANSITION STATIONING AND RATES.

FOR LEGEND. SEE SHEET 17

△ SEE UNDERDRAIN SUB-SUMMARY SHEETS FOR DEPTH AND QUANTITIES.

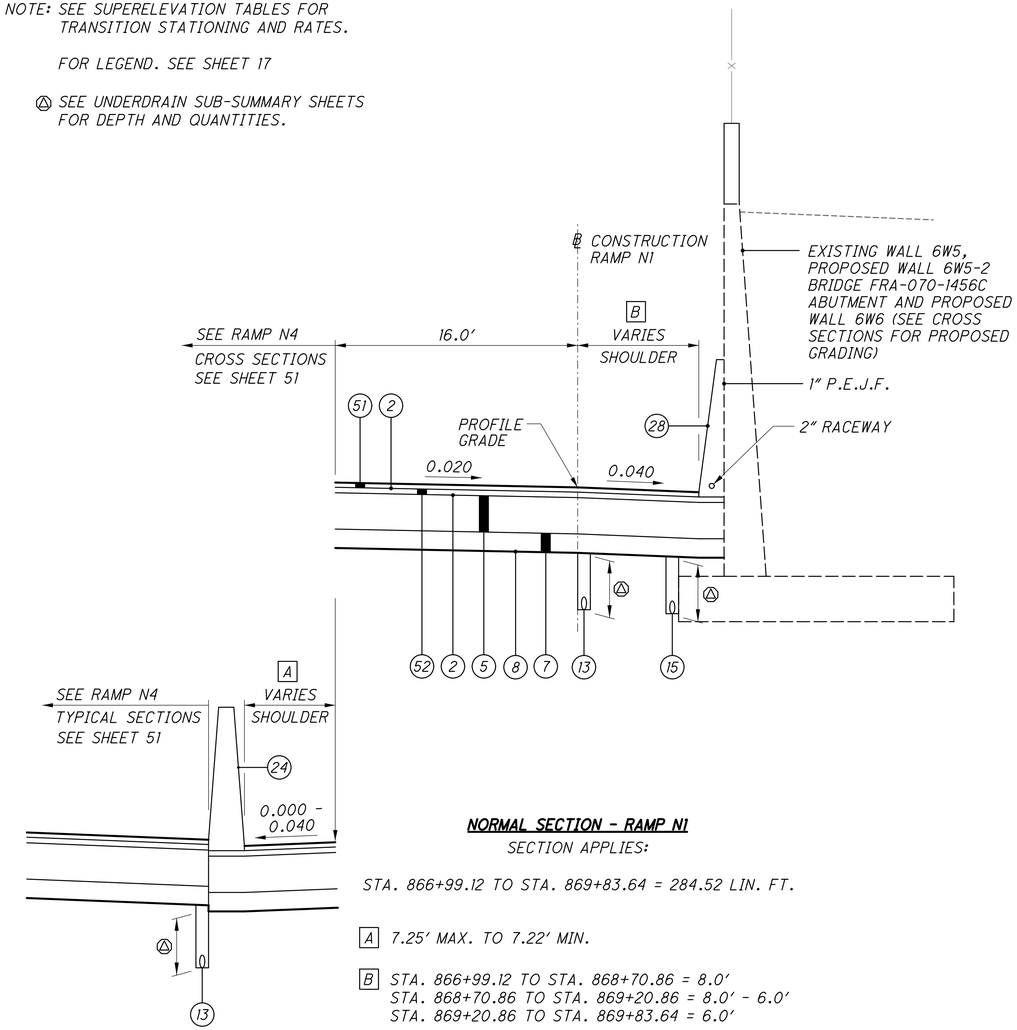

STA. 868+70.86 TO STA. 869+83.64 = 112.78 LIN. FT.

NORMAL SECTION - RAMP N1

SECTION APPLIES:

STA. 866+99.12 TO STA. 869+83.64 = 284.52 LIN. FT.

[A] 7.25′ MAX. TO 7.22′ MIN.

[B] STA. 866+99.12 TO STA. 868+70.86 = 8.0′
STA. 868+70.86 TO STA. 869+20.86 = 8.0′ - 6.0′
STA. 869+20.86 TO STA. 869+83.64 = 6.0′

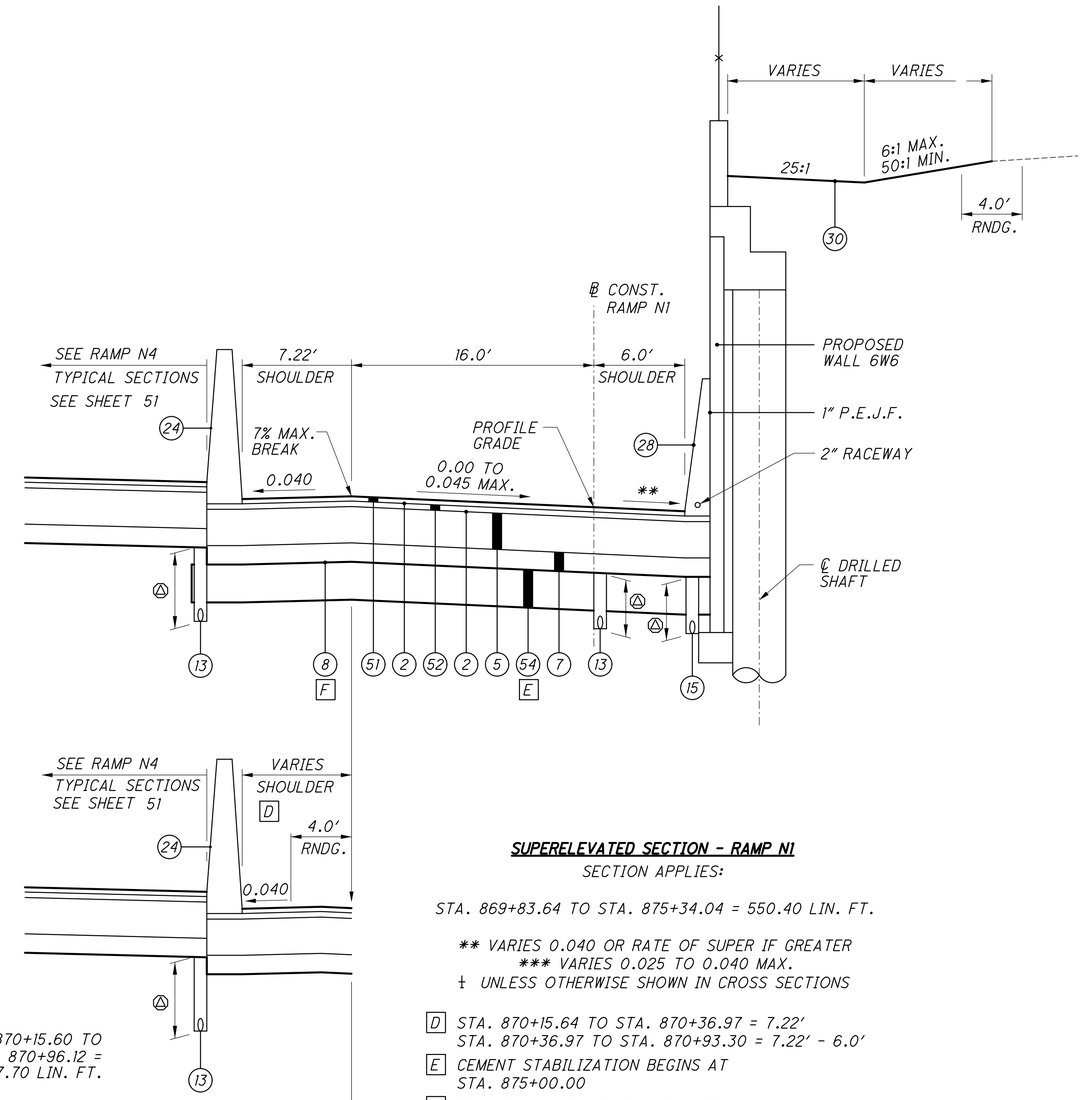

STA. 870+15.60 TO STA. 870+96.12 = 77.70 LIN. FT.

STA. 870+96.12 TO STA. 875+34.04 = 437.92 LIN. FT.

SUPERELEVATED SECTION - RAMP N1

SECTION APPLIES:

STA. 869+83.64 TO STA. 875+34.04 = 550.40 LIN. FT.

** VARIES 0.040 OR RATE OF SUPER IF GREATER
*** VARIES 0.025 TO 0.040 MAX.
‡ UNLESS OTHERWISE SHOWN IN CROSS SECTIONS

[D] STA. 870+15.64 TO STA. 870+36.97 = 7.22′
STA. 870+36.97 TO STA. 870+93.30 = 7.22′ - 6.0′

[E] CEMENT STABILIZATION BEGINS AT STA. 875+00.00

[F] STA. 869+83.64 TO STA. 875+00.00

[G] STA. 870+93.30 TO STA. 874+50.00 = 0.0′
STA. 874+50.00 TO STA. 875+34.04 = 4.0′

CROSS REFERENCES	
SHT NO	DESCRIPTION
582-585 616-631	PLAN

CALCULATED DWH
CHECKED TAZ

TYPICAL SECTIONS - RAMP N1
STA. 866+99.12 TO STA. 875+34.04

FRA-70-14.54

ms consultants, inc.

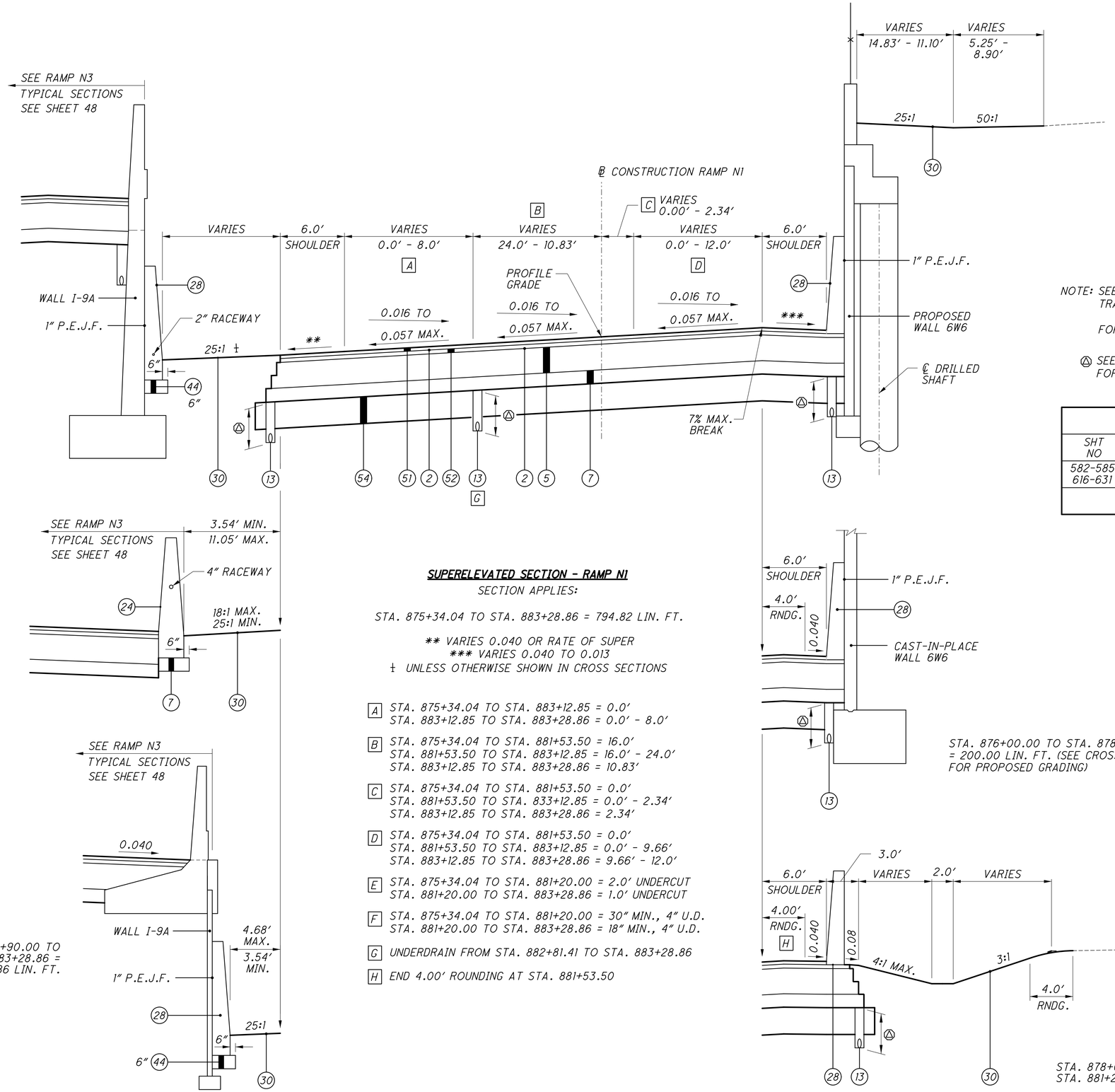

NOTE: SEE SUPERELEVATION TABLES FOR TRANSITION STATIONING AND RATES.

FOR LEGEND. SEE SHEET 17

△ SEE UNDERDRAIN SUB-SUMMARY SHEETS FOR DEPTH AND QUANTITIES.

CROSS REFERENCES	
SHT NO	DESCRIPTION
582-585 616-631	PLAN

SUPERELEVATED SECTION - RAMP N1

SECTION APPLIES:

STA. 875+34.04 TO STA. 883+28.86 = 794.82 LIN. FT.

** VARIES 0.040 OR RATE OF SUPER
*** VARIES 0.040 TO 0.013
± UNLESS OTHERWISE SHOWN IN CROSS SECTIONS

A STA. 875+34.04 TO STA. 883+12.85 = 0.0'
STA. 883+12.85 TO STA. 883+28.86 = 0.0' - 8.0'

B STA. 875+34.04 TO STA. 881+53.50 = 16.0'
STA. 881+53.50 TO STA. 883+12.85 = 16.0' - 24.0'
STA. 883+12.85 TO STA. 883+28.86 = 10.83'

C STA. 875+34.04 TO STA. 881+53.50 = 0.0'
STA. 881+53.50 TO STA. 833+12.85 = 0.0' - 2.34'
STA. 883+12.85 TO STA. 883+28.86 = 2.34'

D STA. 875+34.04 TO STA. 881+53.50 = 0.0'
STA. 881+53.50 TO STA. 883+12.85 = 0.0' - 9.66'
STA. 883+12.85 TO STA. 883+28.86 = 9.66' - 12.0'

E STA. 875+34.04 TO STA. 881+20.00 = 2.0' UNDERCUT
STA. 881+20.00 TO STA. 883+28.86 = 1.0' UNDERCUT

F STA. 875+34.04 TO STA. 881+20.00 = 30" MIN., 4" U.D.
STA. 881+20.00 TO STA. 883+28.86 = 18" MIN., 4" U.D.

G UNDERDRAIN FROM STA. 882+81.41 TO STA. 883+28.86

H END 4.00' ROUNDING AT STA. 881+53.50

CALCULATED DWH
CHECKED TAZ

TYPICAL SECTIONS - RAMP N1
STA. 875+34.04 TO STA. 883+28.86

FRA-70-14.54

PLOT.CEL
ms consultants, inc.
msconsultants.com
Ohio DOT Workspace
70\71 East Interchange 2E
www.msconsultants.com
Batchplot Spec: \\msconsultants.com\files\production\03\60\06634_2E\standards\plotdrv\batchplt.spc
Pen Table: \\msconsultants.com\files\Standards\ustn\ohdot\V8i\ms\plotting\pen\V8i_ms_std.tbl
Plot Driver: \\msconsultants.com\files\Standards\ustn\ohdot\V8i\ms\plotting\PDF.pltcfg
34" x 22"
Model: Sheet
Printed: 7/23/2018 @ 2:30:40 PM
File: N:\03\60\06634_2E\roadway\sheets\105322GY048.dgn
View: FENCE_VIEW1
By: dhall
ms consultants, inc.

PLOT.CEL

ms consultants, inc.
msconsultants.com

www.msconsultants.com

Ohio DOT Workspace
70\71 East Interchange 2E

1"
0.5"
0

Batchplot Spec: \\msconsultants.com\Files\Production\03\60\06634_2E\standards\plotdrv\batchplt.spc
Pen Table: \\msconsultants.com\Files\Standards\ustn\ohdot\V8\ms\plotting\pen\V8i_ms_std.tbl PCF: ohdotV8i
Plot Driver: \\msconsultants.com\Files\Standards\ustn\ohdot\v8i\ms\plotting\PDF.pltcfg PCF: 60-06634_2E_Columbus

Model: Sheet View: FENCE_VIEW1
Printed: 7/23/2018 @ 2:33:59 PM By: dholl
File: N:\03\60\06634_2E\roadway\sheets\1053220Y049.dgn

34" x 22"

NOTE: SEE SUPERELEVATION TABLES FOR TRANSITION STATIONING AND RATES.

FOR LEGEND. SEE SHEET 17

(Δ) SEE UNDERDRAIN SUB-SUMMARY SHEETS FOR DEPTH AND QUANTITIES.

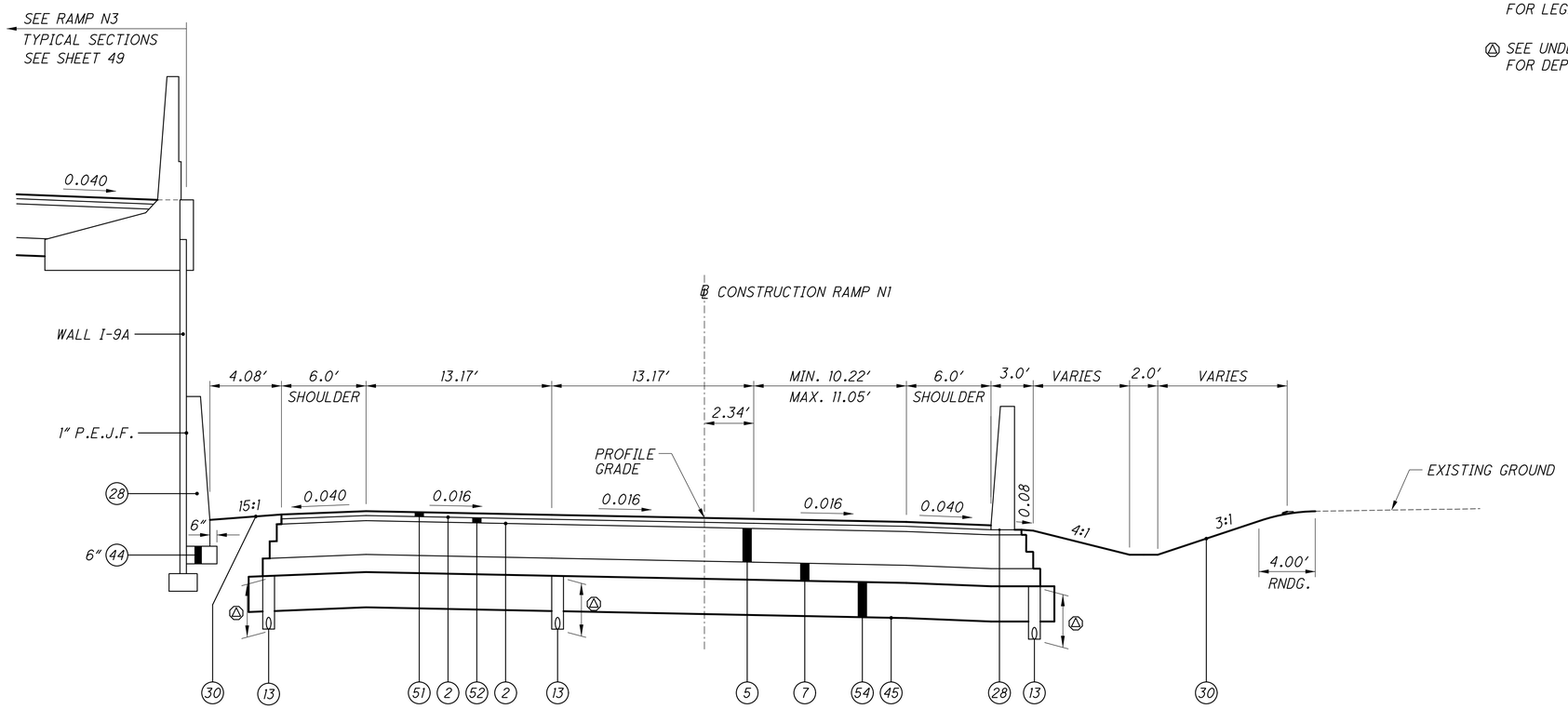

NORMAL SECTION - RAMP N1

SECTION APPLIES:

STA. 883+28.86 TO STA. 883+52.24 = 23.38 LIN. FT.

CROSS REFERENCES	
SHT NO	DESCRIPTION
582-585 616-631	PLAN

CALCULATED DWH
CHECKED TAZ

TYPICAL SECTIONS - RAMP N1
STA. 883+28.86 TO STA. 883+52.24

FRA-70-14.54

44
2317

PLOT.CEL

ms consultants, inc.
msconsultants.com

www.msconsultants.com

Ohio DOT Workspace
70\71 East Interchange 2E

ohdot\V8i
60-06634_2E_Columbus

Batchplot Spec: \\msconsultants.com\Files\production\03\60\06634_2E\standards\plotdir\batchplt.spc
Pen Table: \\msconsultants.com\Files\Standards\ustn\ohdot\V8i\ms\plotting\pen\V8i_ms_std.tbl
Plot Driver: \\msconsultants.com\Files\Standards\ustn\ohdot\v8i\ms\plotting\PDF.pltcfg

Model: Sheet
Printed: 7/23/2018 @ 2:43:37 PM
File: N:\03\60\06634_2E\roadway\sheets\105322GY050.dgn
View: FENCE_VIEW1
By: dhall

34" x 22"

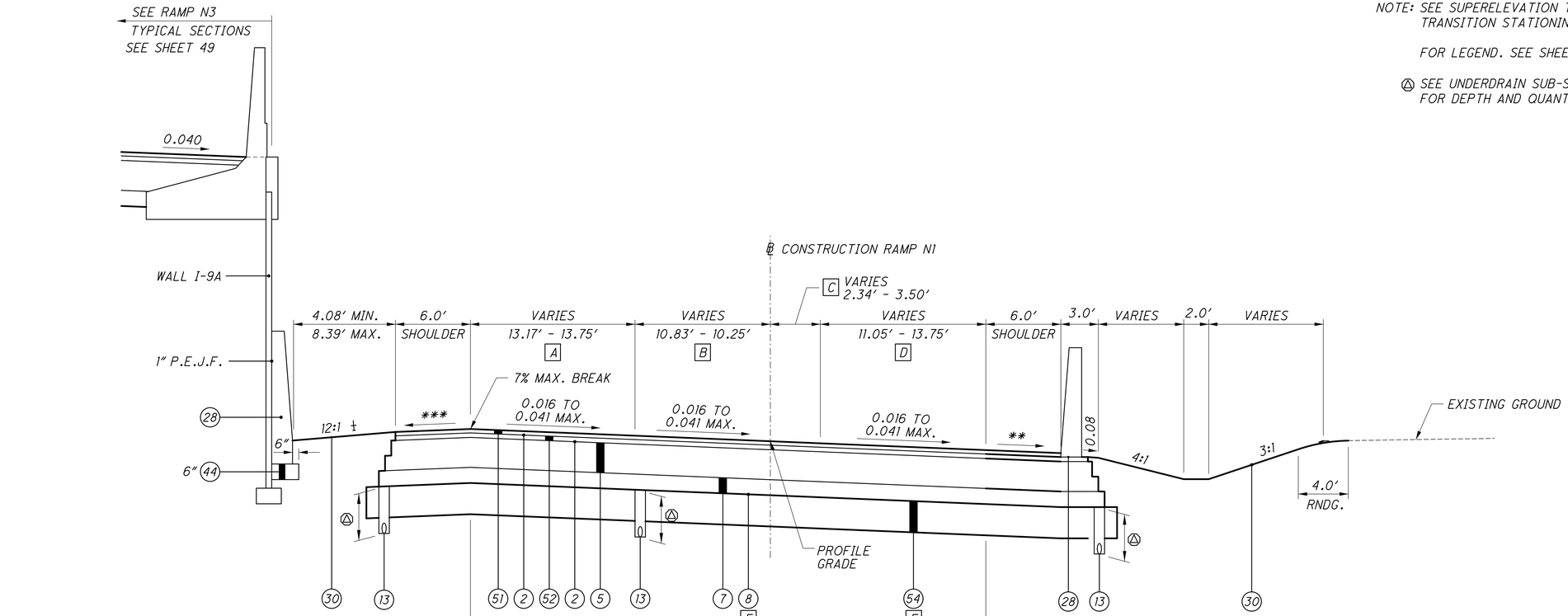

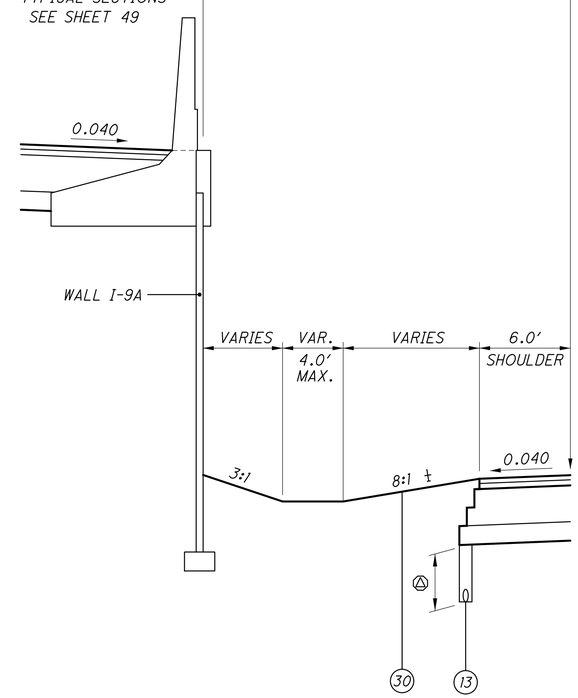

STA. 885+50.00 TO STA. 887+02.41 = 152.41 LIN. FT.

NOTE: SEE SUPERELEVATION TABLES FOR TRANSITION STATIONING AND RATES.

FOR LEGEND. SEE SHEET 17

△ SEE UNDERDRAIN SUB-SUMMARY SHEETS FOR DEPTH AND QUANTITIES.

SUPERELEVATED SECTION - RAMP N1

SECTION APPLIES:

STA. 883+52.24 TO STA. 887+02.41 = 350.17 LIN. FT.

** VARIES 0.040 OR RATE OF SUPER IF GREATER
*** VARIES 0.040 TO 0.029
‡ UNLESS OTHERWISE SHOWN IN CROSS SECTIONS

A STA. 883+52.24 TO STA. 884+12.85 = 13.17′
STA. 884+12.85 TO STA. 884+62.85 = 13.17′ - 13.75′
STA. 884+62.85 TO STA. 887+02.41 = 13.75′

B STA. 883+52.24 TO STA. 884+12.85 = 10.83′
STA. 884+12.85 TO STA. 884+62.85 = 10.83′ - 10.25′
STA. 884+62.85 TO STA. 887+02.41 = 10.25′

C STA. 883+52.24 TO STA. 884+12.85 = 2.34′
STA. 884+12.85 TO STA. 884+62.85 = 2.34′ - 3.50′
STA. 884+62.85 TO STA. 887+02.41 = 3.50′

D STA. 883+52.24 TO STA. 884+62.85 = 11.05′ - 13.75′
STA. 884+62.85 TO STA. 887+02.41 = 13.75′

E STA. 883+52.24 TO STA. 884+50.00 = CEMENT STABILIZATION

F STA. 884+50.00 TO STA. 887+02.41

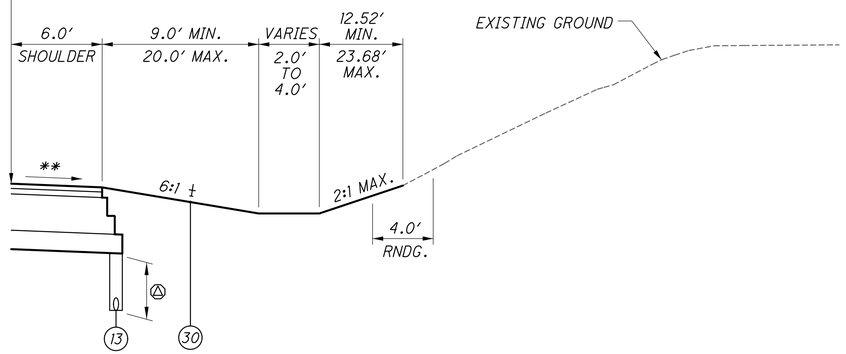

STA. 884+50.00 TO STA. 887+02.41 = 252.41 LIN. FT.

CROSS REFERENCES	
SHT NO	DESCRIPTION
616-631	PLAN
1088	INTERSECTION DETAIL

CALCULATED DWH
CHECKED TAZ

TYPICAL SECTIONS - RAMP N1
STA. 883+52.24 TO STA. 887+02.41

FRA-70-14.54

45
2317

ms consultants, inc.

PLOT.CEL

ms consultants, inc.
msconsultants.com

www.msconsultants.com
Ohio DOT Workspace
70\71 East Interchange 2E

Batchplot Spec: \\msconsultants.com\files\production\03\60\06634_2E\standards\plotdrv\batchplt.spc
Pen Table: \\msconsultants.com\files\Standards\usth\ohdot\V8i\ms\plotting\pen\V8i_ms_std.tbl PCF: ohdot\V8i
Plot Driver: \\msconsultants.com\files\Standards\usth\ohdot\V8i\ms\plotting\PDF.pltcfg PCF: 60-06634_2E_Columbus

Model: Sheet View: FENCE_VIEW1
Printed: 6/19/2018 @ 7:56:48 AM By: jdouglas
File: N:\03\60\06634_2E\roadway\sheets\1052261051.dgn

34" x 22"

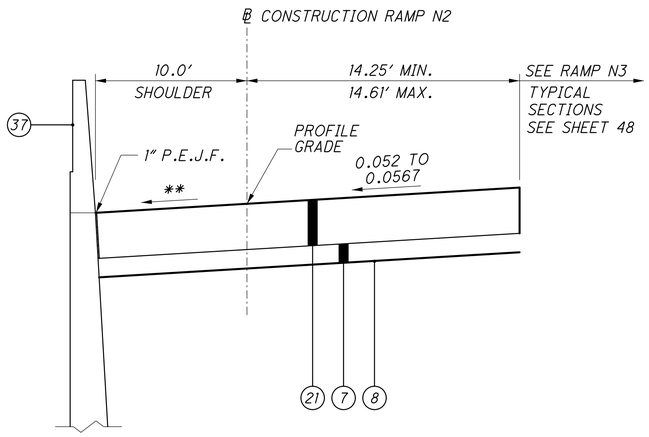

APPROACH SLAB SECTION - RAMP N2 (SKEWED)

APPROACH SLAB: 30.00′ LONG PERP. TO F.A. (AS-1-81) MODIFIED SECTION APPLIES:

STA. 783+08.36 TO STA. 783+52.00 = 43.64 LIN. FT.

*** VARIES 0.040 OR RATE OF SUPER*

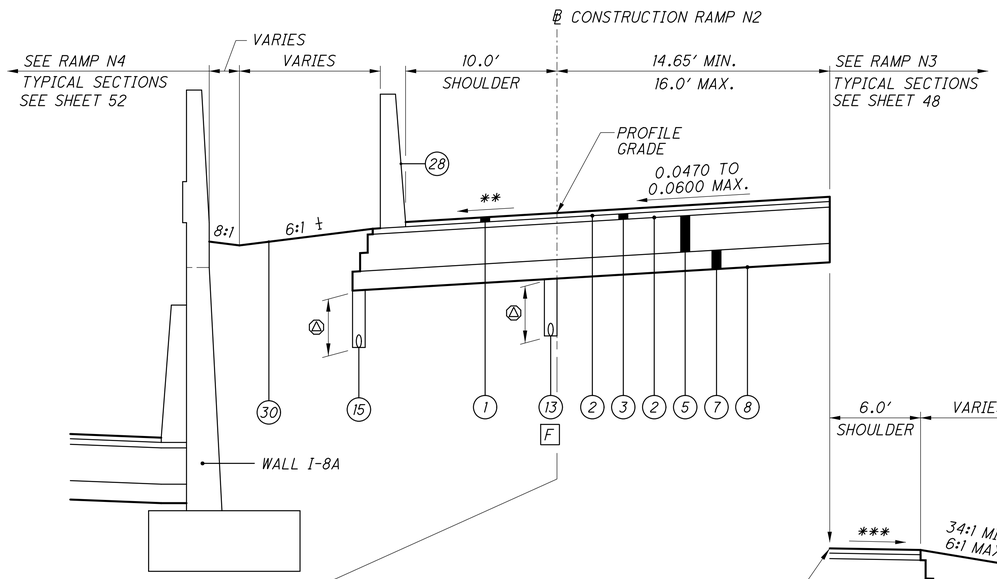

NOTE: SEE SUPERELEVATION TABLES FOR TRANSITION STATIONING AND RATES.

FOR LEGEND. SEE SHEET 17

△ *SEE UNDERDRAIN SUB-SUMMARY SHEETS FOR DEPTH AND QUANTITIES.*

CROSS REFERENCES	
SHT NO	DESCRIPTION
597, 620-628, 653	PLAN

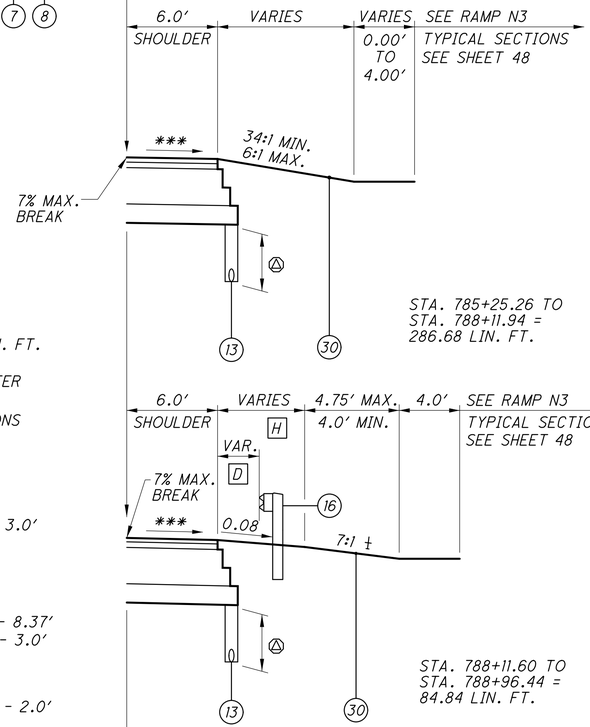

SUPERELEVATED SECTION - RAMP N2

SECTION APPLIES:

STA. 783+52.00 TO STA. 789+61.20 = 609.20 LIN. FT.

*** VARIES 0.040 OR RATE OF SUPER IF GREATER*
**** VARIES 0.023 TO 0.010*
‡ UNLESS OTHERWISE SHOWN IN CROSS SECTIONS

[A] *STA. 784+40.00 TO STA. 786+68.61 = 0.0′*
STA. 786+63.61 TO STA. 787+18.93 = 3.75′
STA. 787+18.93 TO STA. 787+31.43 = 3.75 - 3.0′
STA. 787+31.43 TO STA. 788+94.26 = 3.0′

[B] *BEGIN GUARDRAIL AT STA. 786+63.83*

[C] *STA. 784+40.00 TO STA. 785+20.64 = 10.0′*
STA. 785+20.64 TO STA. 785+61.29 = 10.0′ - 8.37′
STA. 785+61.29 TO STA. 786+95.64 = 8.37′ - 3.0′
STA. 786+95.64 TO STA. 788+94.26 = 3.0′

[D] *STA. 788+11.60 TO STA. 788+60.44 = 2.75′*
STA. 788+60.44 TO STA. 788+72.60 = 2.75′ - 2.0′
STA. 788+72.60 TO STA. 788+96.44 = 2.0′

[E] *BEGIN BRIDGE FRA-70-1476 ABUTMENT AT STA. 789+30.60, 27.75′ RT.*

[F] *UNDERDRAIN STA. 783+52.00 TO STA. 785+87.11*

[G] *STA. 784+40.00 TO STA. 785+50.00 = 3.0′*
STA. 785+50.00 TO STA. 786+68.61 = 3.0′ - 6.75′
STA. 786+68.61 TO STA. 787+18.93 = 6.75′
STA. 787+18.93 TO STA. 787+31.43 = 6.75′ - 6.0′
STA. 787+31.43 TO STA. 788+50.00 = 6.0′
STA. 788+50.00 TO STA. 788+94.26 = 6.0′ - 1.67′

[H] *STA. 788+11.60 TO STA. 788+60.44 = 5.75′*
STA. 788+60.44 TO STA. 788+72.60 = 5.75′ - 5.0′
STA. 788+72.60 TO STA. 788+96.44 = 5.0′

[I] *END BARRIER AT STA. 789+32.31*

CALCULATED DWH
CHECKED TAZ

TYPICAL SECTIONS - RAMP N2
STA. 783+08.36 TO STA. 789+61.20

FRA-70-14.54

ms consultants, inc.

PLOT.CEL

ms consultants, inc.
msconsultants.com

www.msconsultants.com
Ohio DOT Workspace
70\71 East Interchange 2E

1" 0.5" 0

Batchplot Spec: \\msconsultants.com\files\production\Q3\60\06634.2E\standards\plotdr\batchplt.spc PDF: ohdot\V8i
Pen Table: \\msconsultants.com\files\Standards\ustn\ohdot\V8i\ms\plotting\pen\V8i_ms_std.tbl DGF: 60-06634_2E_Columbus
Plot Driver: \\msconsultants.com\files\Standards\ustn\ohdot\v8i\ms\plotting\PDF.pltcfg

Model: Sheet @ 7:56:49 AM View: FENCE_VIEW1
Printed: 6/19/2018 By: jdouglas
File: N:\03\60\06634.2E\roadway\sheets\05322617052.dgn

34" x 22"

NOTE: SEE SUPERELEVATION TABLES FOR TRANSITION STATIONING AND RATES.

FOR LEGEND. SEE SHEET 17

△ SEE UNDERDRAIN SUB-SUMMARY SHEETS FOR DEPTH AND QUANTITIES.

* ROUNDING APPLIES WHEN SUPER ELEVATION EXCEEDS 3%

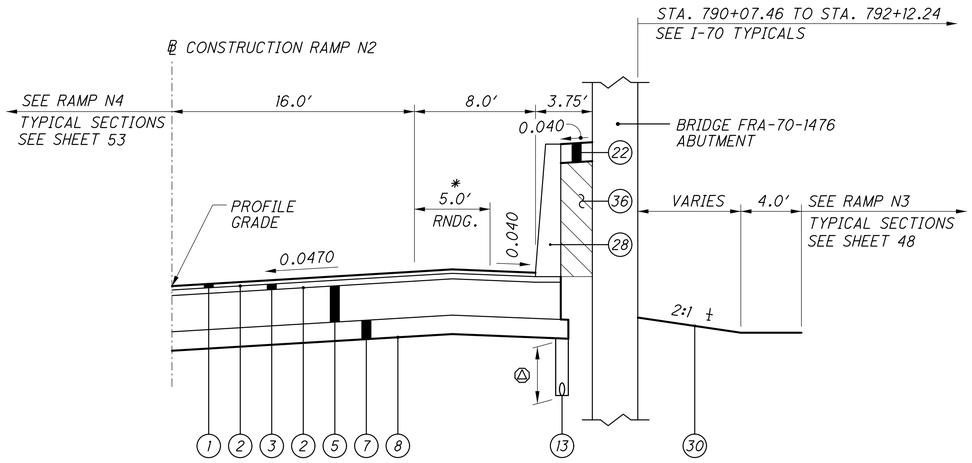

SUPERELEVATED SECTION - RAMP N2

SECTION APPLIES:

STA. 789+61.20 TO STA. 791+07.02 = 145.82 LIN. FT.

ǂ UNLESS OTHERWISE SHOWN IN CROSS SECTIONS

CROSS REFERENCES	
SHT NO	DESCRIPTION
597, 620-628, 653	PLAN

CALCULATED DWH
CHECKED TAZ

TYPICAL SECTIONS - RAMP N2
STA. 789+61.20 TO STA. 791+07.02

FRA-70-14.54

ms consultants, inc.

PLOT.CEL
ms consultants, inc.
msconsultants.com
www.msconsultants.com
Ohio DOT Workspace
70\71 East Interchange 2E
0 0.5" 1"
Batchplot Spec: \\msconsultants.com\files\production\03\60\06634_2E\standards\plotdr\batchplt.spc
Pen Table: \\msconsultants.com\files\Standards\usth\ohdot\V8i\ms\plotting\pen\V8i_ms_std.tbl
Plot Driver: \\msconsultants.com\files\Standards\usth\ohdot\v8i\ms\plotting\PDF.pltcfg
PDF: ohdotV8i
PLCF: 60-06634_2E_Columbus
34" x 22"
View: FENCE_VIEW1
By: jdouglas
Model: Sheet
Printed: 6/19/2018 @ 7:56:51 AM
File: N:\03\60\06634_2E\roadway\sheets\0532261053d.dgn

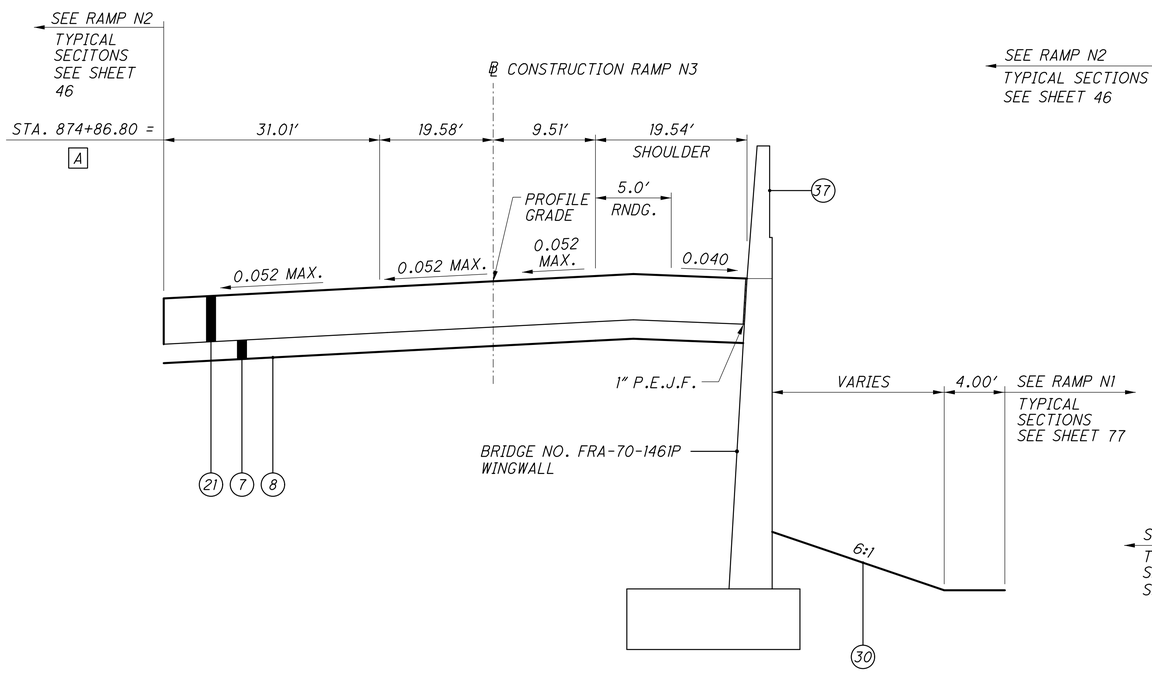

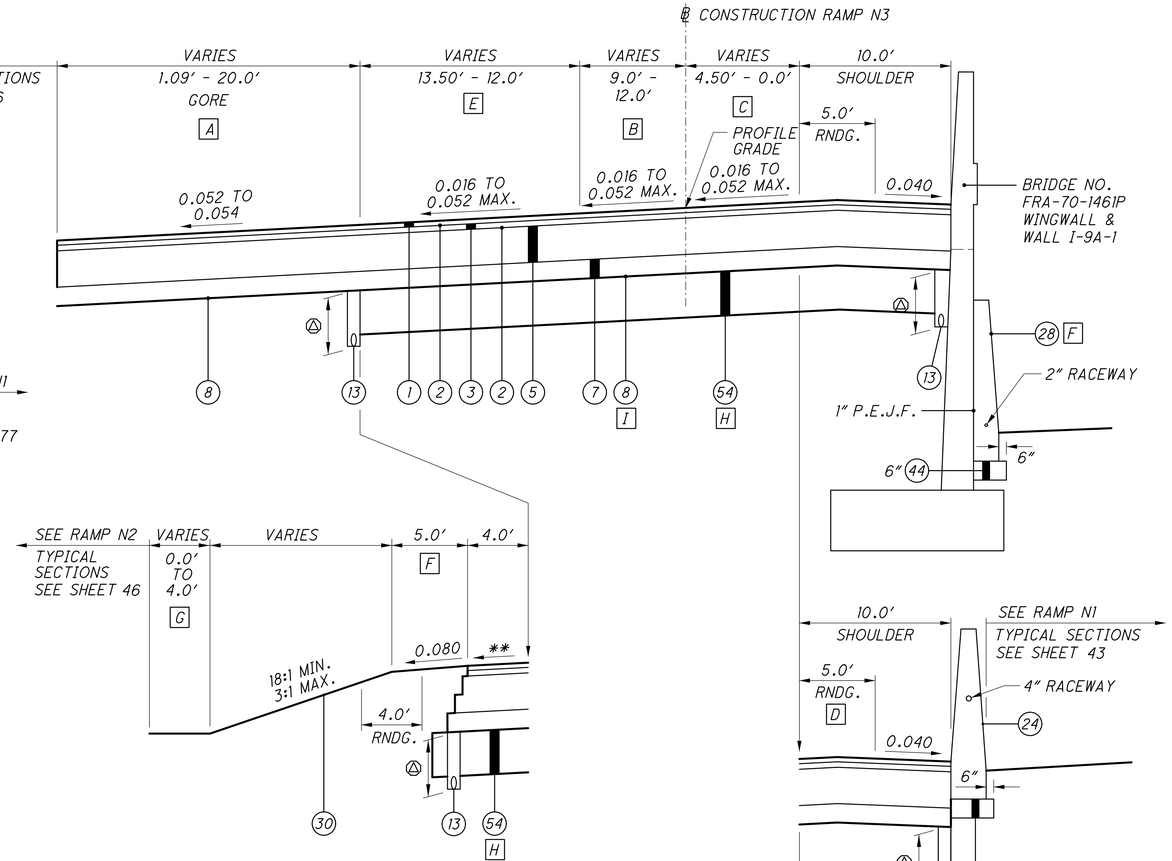

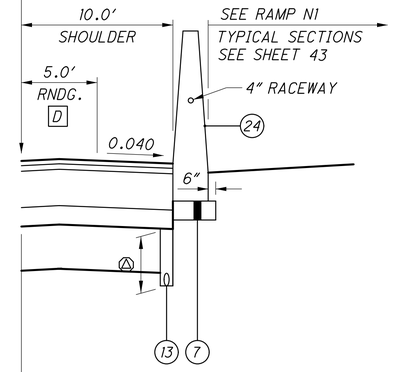

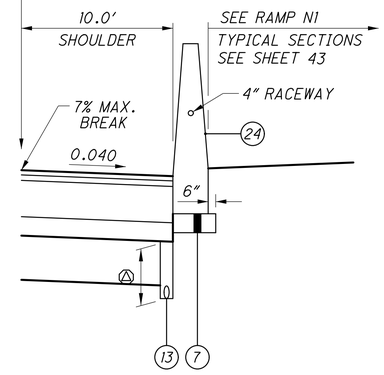

APPROACH SLAB SECTION - RAMP N3 (SKEWED)

APPROACH SLABS: 30′-0″ LONG PERP. TO F.A. (AS-1-81), MODIFIED SECTION APPLIES:

STA. 874+86.80 TO STA. 875+16.80 = 35.83 LIN. FT.

△ ALL CROSS SLOPES AND 5′ ROUNDING DIMENSIONS ARE PERPENDICULAR TO ℄ CONSTRUCTION RAMP N3

[A] DIMENSIONS SHOWN ARE MEASURED ALONG THE SKEWED LINE OF BEGIN APPROACH SLAB

STA. 877+97.72 TO STA. 882+20.17 = 422.45 LIN. FT.

SUPERELEVATED SECTION - RAMP N3

SECTION APPLIES:

STA. 875+16.80 TO STA. 882+20.17 = 703.37 LIN. FT.

** VARIES 0.040 OR RATE OF SUPER

‡ UNLESS OTHERWISE SHOWN IN CROSS SECTIONS

STA. 878+13.86 TO STA. 881+21.61 = 307.75 LIN. FT.

STA. 881+21.61 TO STA. 882+20.17 = 98.56 LIN. FT.

[A] STA. 875+09.88 TO STA. 875+91.76 = 0.0′ - 2.0′
BEGIN GORE AT STA. 875+91.76
STA. 875+91.76 TO STA. 877+97.72 = 2.0′ - 20.0′

[B] STA. 875+16.80 TO STA. 875+91.76 = 9.0′
STA. 875+91.76 TO STA. 877+97.72 = 9.0′ - 10.50′
STA. 877+97.72 TO STA. 880+54.83 = 10.50′
STA. 880+54.83 TO STA. 882+20.17 = 10.50′ - 12.0′

[C] STA. 875+16.83 TO STA. 875+91.76 = 4.50′
STA. 875+91.76 TO STA. 877.97.72 = 4.50′ - 3.0′
STA. 877+97.72 TO STA. 880+54.66 = 3.0′
STA. 880+54.66 TO STA. 882+20.17 = 3.0′ - 0.0′

[D] END 5.00′ SHOULDER ROUNDING AT STA. 881+21.61

[E] STA. 875+16.80 TO STA. 880+54.83 = 13.50′
STA. 880+54.83 TO STA. 882+20.17 = 13.50′ - 12.0′

[F] BEGIN TYPE D BARRIER AT STA. 875+23.89

[G] STA. 878+26.82 TO STA. 879+00.00 = 0.0′
STA. 879+00.00 TO STA. 879+34.93 = 0.0′ - 4.0′
STA. 879+34.93 TO STA. 882+20.17 = 4.0′

[H] SUBGRADE STABILIZATION LIMITS ARE
STA. 878+00.00 TO 882+20.17

[I] STA. 875+16.80 TO STA. 878+00.00

CROSS REFERENCES	
SHT NO	DESCRIPTION
588-591 620-635	PLAN
1648-1712	BRIDGE FRA-70-1461P

NOTE: SEE SUPERELEVATION TABLES FOR TRANSITION STATIONING AND RATES.

FOR LEGEND. SEE SHEET 17

△ SEE UNDERDRAIN SUB-SUMMARY SHEETS FOR DEPTH AND QUANTITIES.

CALCULATED DWH
CHECKED TAZ

TYPICAL SECTIONS - RAMP N3
STA. 874+86.80 TO STA. 882+20.17

FRA-70-14.54

ms consultants, inc.

PLOT.CEL

ms consultants, inc.
msconsultants.com

Ohio DOT Workspace
70\71 East Interchange 2E
www.msconsultants.com

1"
0.5"
0

Batchplot Spec: \\msconsultants.com\files\production\03\60\06634_2E\standards\plotdrv\batchplt.spc PCF: ohdot1V8i
Pen Table: \\msconsultants.com\files\Standards\ustn\ohdot\V8i\ms\plotting\pen\V8i_ms_std.tbl PCF: 60-06634_2E_Columbus
Plot Driver: \\msconsultants.com\files\Standards\ustn\ohdot\v8i\ms\plotting\PDF.pltcfg

Model: Sheet View: FENCE_VIEW1
Printed: 6/19/2018 @ 7:56:52 AM By: jdougas
File: N:\03\60\06634_2E\roadway\sheets\1053220T054.dgn

34" x 22"

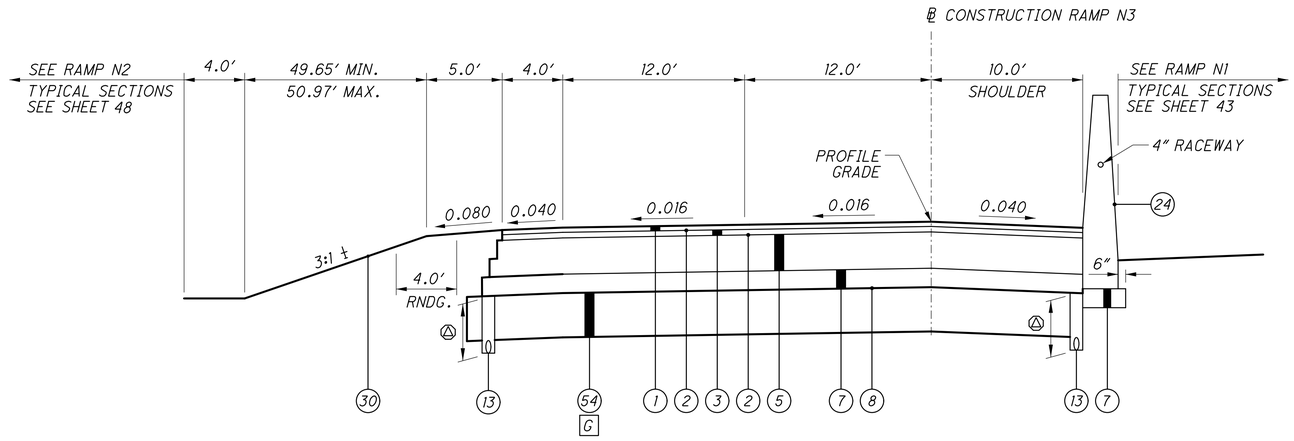

NORMAL SECTION - RAMP N3

SECTION APPLIES:

STA. 882+20.17 TO STA. 882+27.14 = 6.97 LIN. FT.

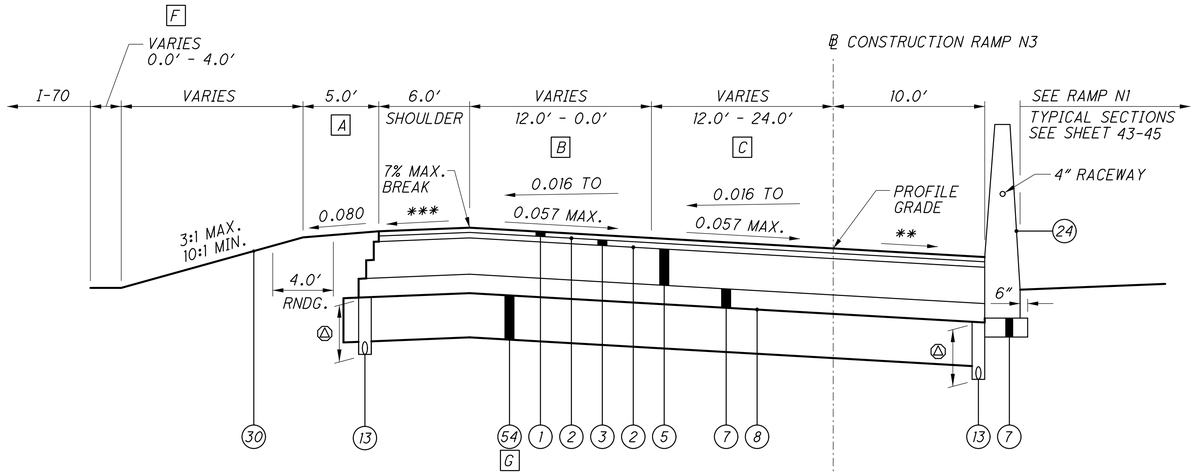

SUPERELEVATED SECTION - RAMP N3

SECTION APPLIES:

STA. 882+27.14 TO STA. 886+06.07 = 378.93 LIN. FT.

** VARIES 0.040 OR RATE OF SUPER IF GREATER
*** VARIES 0.013 TO 0.040 MAX.
‡ UNLESS OTHERWISE SHOWN IN CROSS SECTIONS

A STA. 882+27.14 TO STA. 883+00.00 = 5.0′
STA. 883+00.00 TO STA. 883+50.00 = 5.0′ - 0.0′
STA. 883+50.00 TO STA. 886+06.07 = 0.0′

B STA. 882+27.14 TO STA. 882+73.78 = 12.0′
STA. 882+73.78 TO STA. 886+06.07 = 0.0′

C STA. 882+27.14 TO STA. 882+73.78 = 12.0′
STA. 882+73.78 TO STA. 886+06.07 = 24.0′ - 20.22′

F STA. 882+27.14 TO STA. 882+55.56 = 4.0′
STA. 882+55.56 TO STA. 882+95.72 = 4.0′ - 2.0′
STA. 882+95.72 TO STA. 885+22.49 = 2.0′
STA. 885+22.49 TO STA. 885+30.00 = 2.0′ - 0.0′
STA. 885+50.00 TO STA. 886+06.07 = 0.0′

G SUBGRADE STABILIZATION LIMITS ARE
STA. 882+20.17 TO STA. 882+50.00

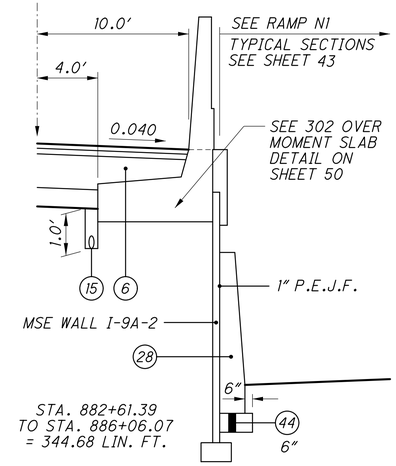

STA. 882+61.39
TO STA. 886+06.07
= 344.68 LIN. FT.

NOTE: SEE SUPERELEVATION TABLES FOR TRANSITION STATIONING AND RATES.

FOR LEGEND. SEE SHEET 17

△ SEE UNDERDRAIN SUB-SUMMARY SHEETS FOR DEPTH AND QUANTITIES.

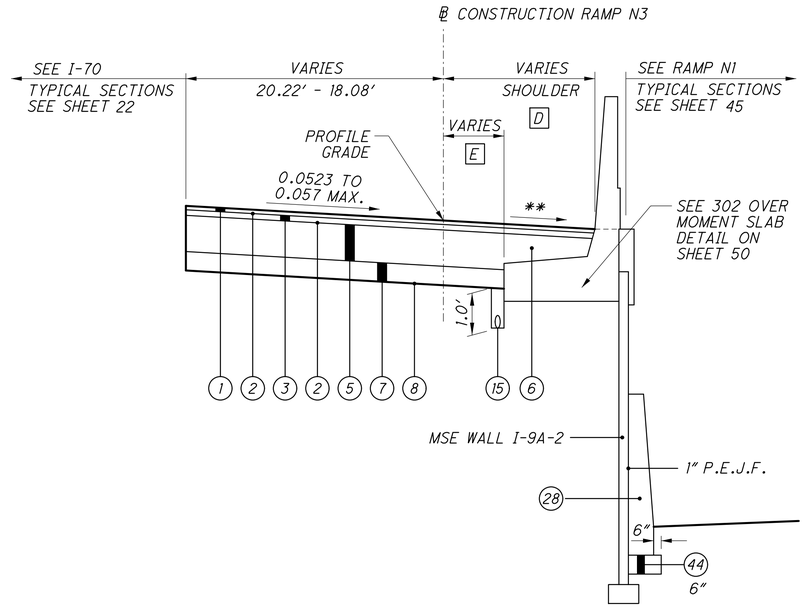

SUPERELEVATED SECTION - RAMP N3

SECTION APPLIES:

STA. 886+06.07 TO STA. 887+18.14 = 112.07 LIN. FT.

** VARIES 0.040 OR RATE OF SUPER IF GREATER

D STA. 886+06.07 TO STA. 886+50.00 = 10.0′
STA. 886+50.00 TO STA. 887+00.00 = 10.0′ - 8.0′
STA. 887+00.00 TO STA. 887+18.14 = 8.0′

E STA. 886+06.07 TO STA. 886+50.00 = 4.0′
STA. 886+50.00 TO STA. 887+00.00 = 4.0′ - 2.0′
STA. 887+00.00 TO STA. 887+18.14 = 2.0′

CROSS REFERENCES	
SHT NO	DESCRIPTION
588-591 620-635	PLAN

CALCULATED DWH
CHECKED TAZ

TYPICAL SECTIONS - RAMP N3
STA. 882+20.17 TO STA. 887+18.14

FRA-70-14.54

ms consultants, inc.

PLOT.CEL

ms consultants, inc.
msconsultants.com

www.msconsultants.com

Ohio DOT Workspace
70\71 East Interchange 2E

1"
0.5"
0

Batchplot Spec: \\msconsultants.com\files\production\Q3\60\06634_2E\standards\plotdrv\batchplt.spc
Pen Table: \\msconsultants.com\files\Standards\usth\ohdot\V8i\ms\plotting\pen\V8i_ms_std.tbl
Plot Driver: \\msconsultants.com\files\Standards\usth\ohdot\v8i\ms\plotting\PDF.pltcfg
PCF: ohdot\V8i
PCF: 60-06634_2E_Columbus

Model: Sheet
Printed: 6/19/2018 @ 7:56:54 AM
File: N:\Q3\60\06634_2E\roadway\sheets\U05322617055.dgn
View: FENCE_VIEW1
By: jdouglas

34" x 22"

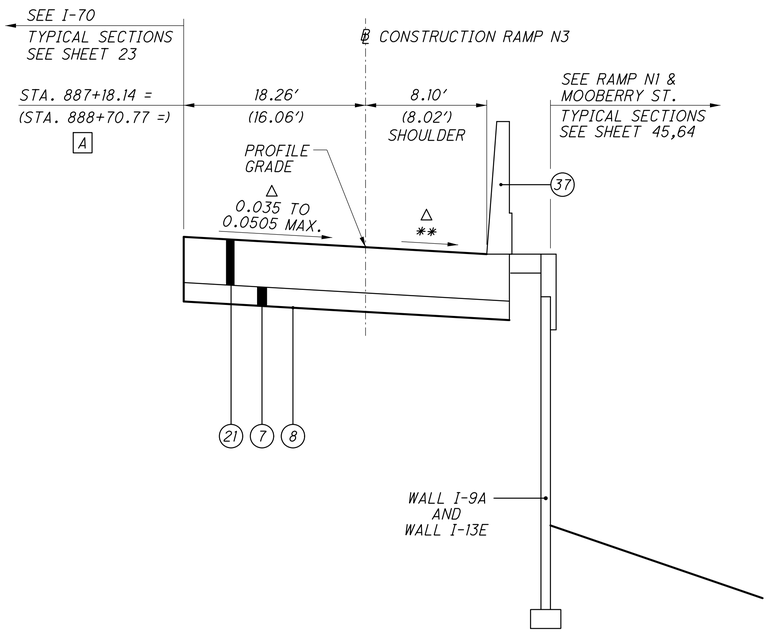

APPROACH SLAB SECTION - RAMP N3 (SKEWED)

APPROACH SLABS: 30′-0″ LONG (AS-1-81), MODIFIED SECTION APPLIES:

STA. 887+18.14 TO STA. 887+48.36 = 30.22 LIN. FT.
STA. 888+70.77 TO STA. 889+00.80 = 30.03 LIN. FT.

** VARIES 0.040 OR RATE OF SUPER IF GREATER

△ ALL CROSS SLOPES ARE PERPENDICULAR TO ℄ CONSTRUCTION RAMP N3

A DIMENSIONS SHOWN ARE MEASURED ALONG THE SKEWED LINE OF BEGIN APPROACH SLAB

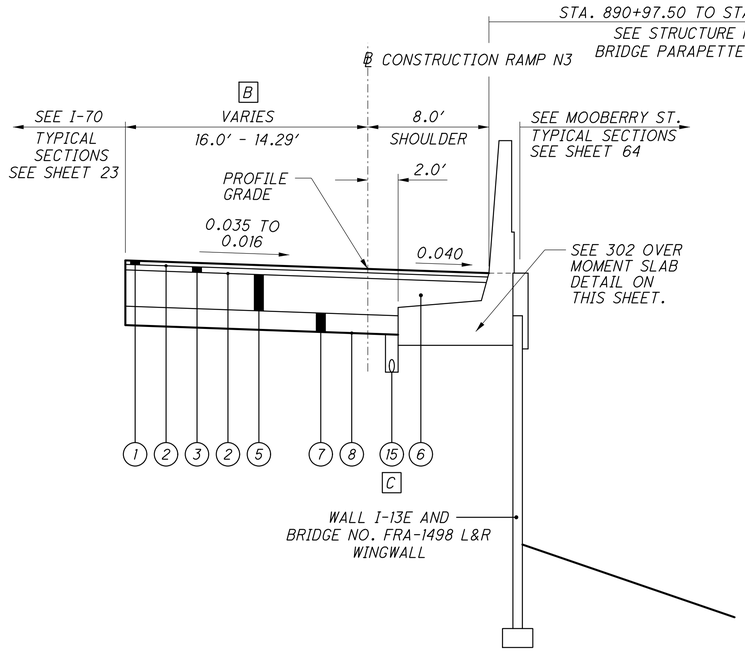

SUPERELEVATED SECTION - RAMP N3

SECTION APPLIES:

STA. 889+00.80 TO STA. 894+06.85 = 506.05 LIN. FT.

B STA. 889+00.80 TO STA. 893+24.40 = 16.0′
STA. 893+24.40 TO STA. 894+06.85 = 16.0′ - 14.29′

C SUSPEND UNDERDRAIN FROM
STA. 890+97.50 TO STA. 894+06.82

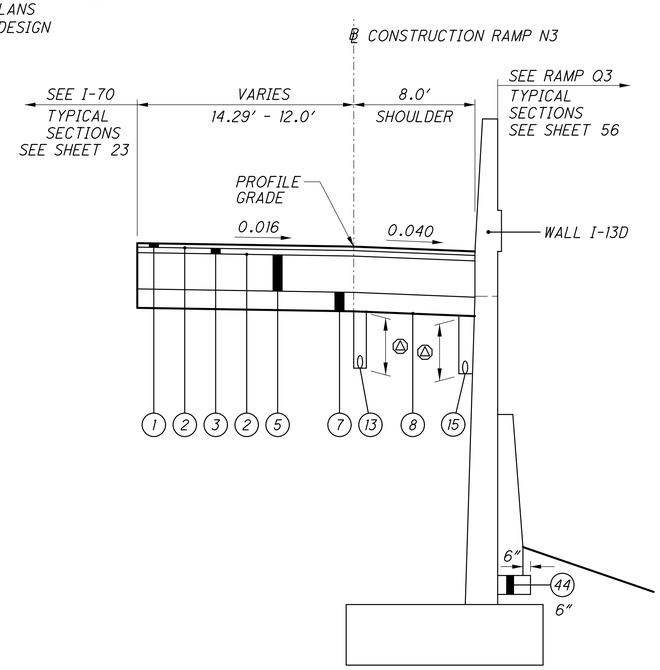

NORMAL SECTION - RAMP N3

SECTION APPLIES:

STA. 894+06.85 TO STA. 895+21.23 = 114.38 LIN. FT.

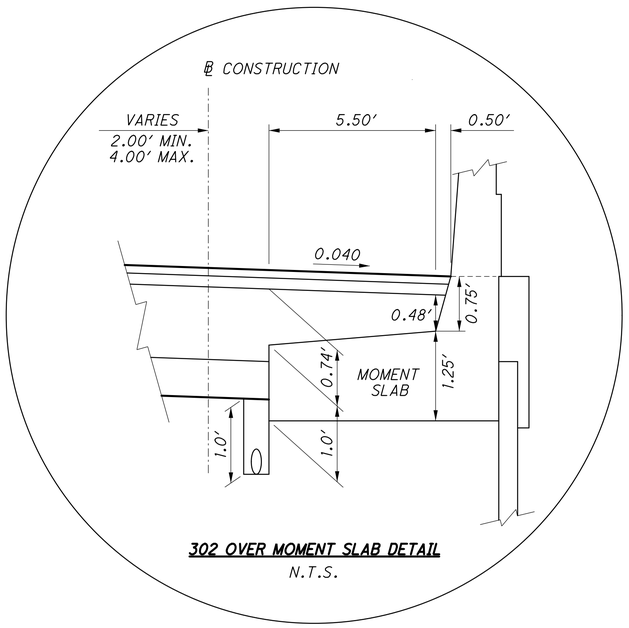

302 OVER MOMENT SLAB DETAIL

N.T.S.

NOTE: SEE SUPERELEVATION TABLES FOR TRANSITION STATIONING AND RATES.

FOR LEGEND. SEE SHEET 17

△ SEE UNDERDRAIN SUB-SUMMARY SHEETS FOR DEPTH AND QUANTITIES.

CROSS REFERENCES	
SHT NO	DESCRIPTION
588-591 620-635	PLAN

CALCULATED DWH
CHECKED TAZ

TYPICAL SECTIONS - RAMP N3
STA. 887+18.14 TO STA. 895+21.23

FRA-70-14.54

ms consultants, inc.

PLOT.CEL

ms consultants, inc.
msconsultants.com

www.msconsultants.com

Ohio DOT Workspace
70\71 East Interchange 2E

0 0.5" 1"

Batchplot Spec: \\msconsultants.com\files\production\03\60\06634_2E\standards\plotdrv\batchplt.spc
Pen Table: \\msconsultants.com\files\Standards\usth\ohdot\V8i\ms\plotting\pen\V8i_ms_std.tbl PDF: ohdot\V8i
Plot Driver: \\msconsultants.com\files\Standards\usth\ohdot\v8i\ms\plotting\PDF.pltcfg PLCF: 60-06634_2E_Columbus

Model: Sheet View: FENCE_VIEW1
Printed: 6/19/2018 @ 7:56:55 AM By: jdouglas
File: N:\03\60\06634_2E\roadway\sheets\0532269028.dgn

34" x 22"

NOTE: SEE SUPERELEVATION TABLES FOR TRANSITION STATIONING AND RATES.

FOR LEGEND. SEE SHEET 17

△ SEE UNDERDRAIN SUB-SUMMARY SHEETS FOR DEPTH AND QUANTITIES.

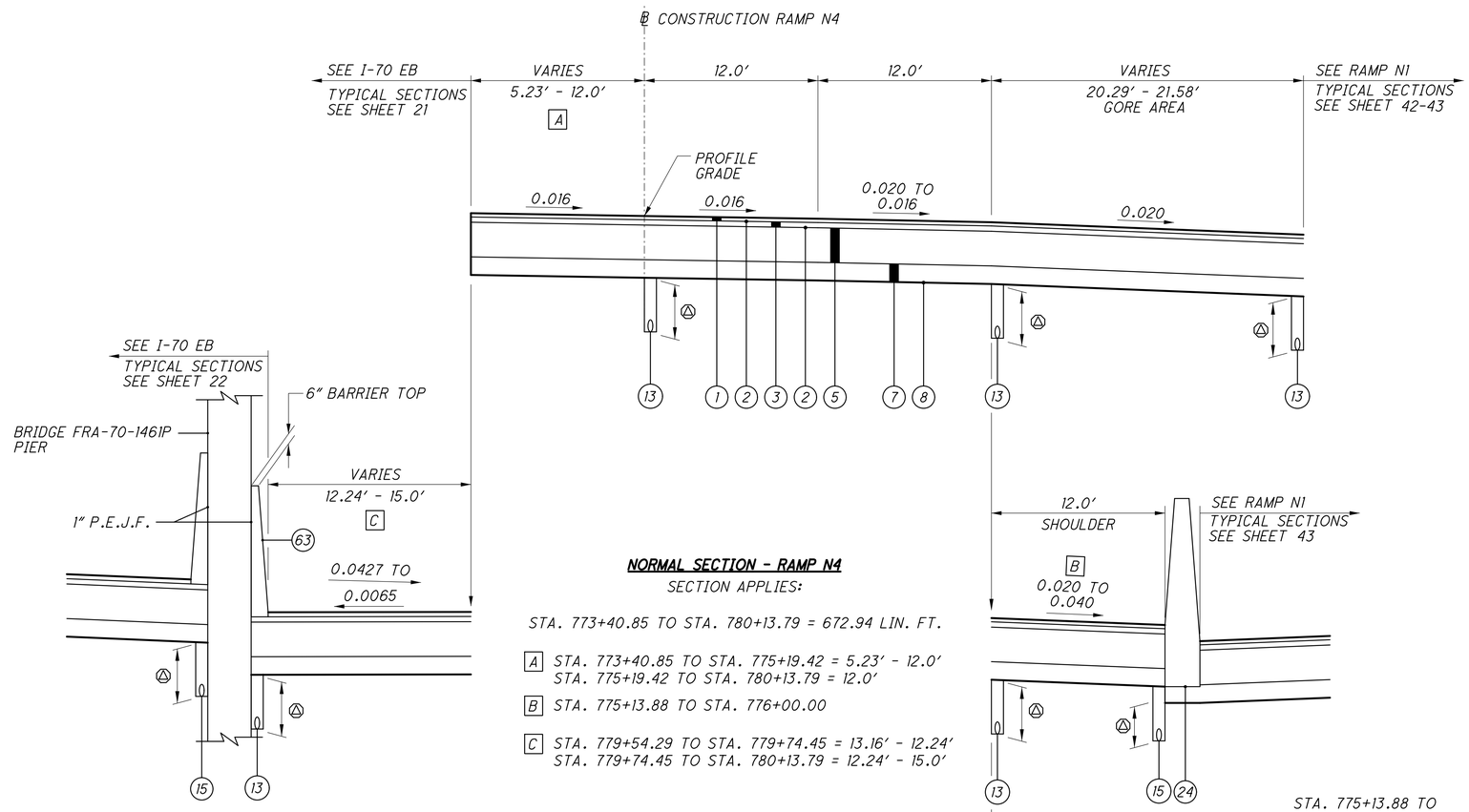

STA. 779+54.29 TO
STA. 780+13.79 = 59.50 LIN. FT.

NORMAL SECTION - RAMP N4

SECTION APPLIES:

STA. 773+40.85 TO STA. 780+13.79 = 672.94 LIN. FT.

A STA. 773+40.85 TO STA. 775+19.42 = 5.23′ - 12.0′
STA. 775+19.42 TO STA. 780+13.79 = 12.0′

B STA. 775+13.88 TO STA. 776+00.00

C STA. 779+54.29 TO STA. 779+74.45 = 13.16′ - 12.24′
STA. 779+74.45 TO STA. 780+13.79 = 12.24′ - 15.0′

STA. 775+13.88 TO
STA. 777+37.02 = 223.14 LIN. FT.

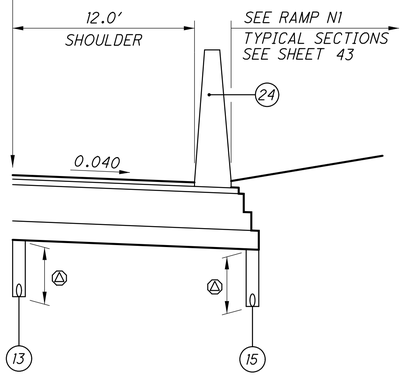

STA. 777+37.02 TO
STA. 780+13.79 = 276.77 LIN. FT.

CROSS REFERENCES	
SHT NO	DESCRIPTION
597-624, 653	PLAN

CALCULATED DWH
CHECKED TAZ

TYPICAL SECTIONS - RAMP N4
STA. 773+40.85 TO STA. 780+13.79

FRA-70-14.54

51
2317

ms consultants, inc.

PLOT.CEL

ms consultants, inc.
msconsultants.com

Ohio DOT Workspace
70\71 East Interchange 2E
www.msconsultants.com

0 0.5" 1"

Batchplot Spec: \\msconsultants.com\files\production\03\60\06634_2E\standards\plotdr\batchplt.spc
Pen Table: \\msconsultants.com\files\Standards\astm\ohdot\V8i\ms\plotting\pen\V8i_ms_std.tbl
Plot Driver: \\msconsultants.com\files\Standards\astm\ohdot\v8i\ms\plotting\PDF.pltcfg
PLOT: ohdot\V8i
PLOT: 60-06634_2E_Columbus

Model: Sheet
Printed: 6/19/2018 @ 7:56:57 AM
File: N:\03\60\06634_2E\roadway\sheets\05322G1029.dgn
View: FENCE_VIEW1
By: jdouglas

34" x 22"

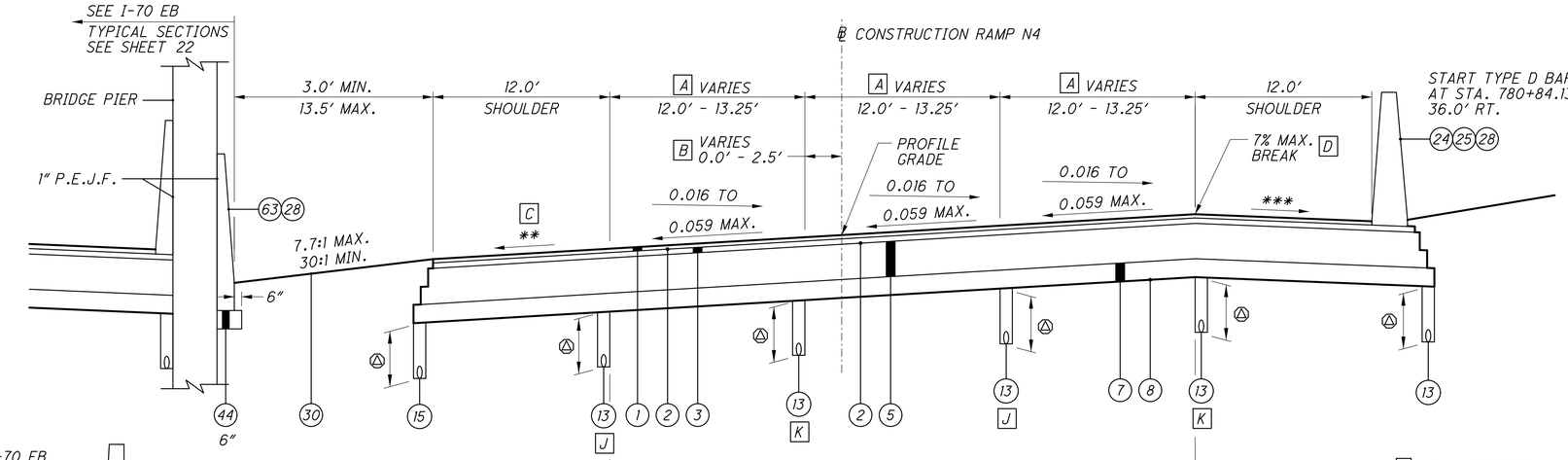

NOTE: SEE SUPERELEVATION TABLES FOR TRANSITION STATIONING AND RATES.

FOR LEGEND. SEE SHEET 17

△ SEE UNDERDRAIN SUB-SUMMARY SHEETS FOR DEPTH AND QUANTITIES.

CROSS REFERENCES	
SHT NO	DESCRIPTION
597-624, 653	PLAN

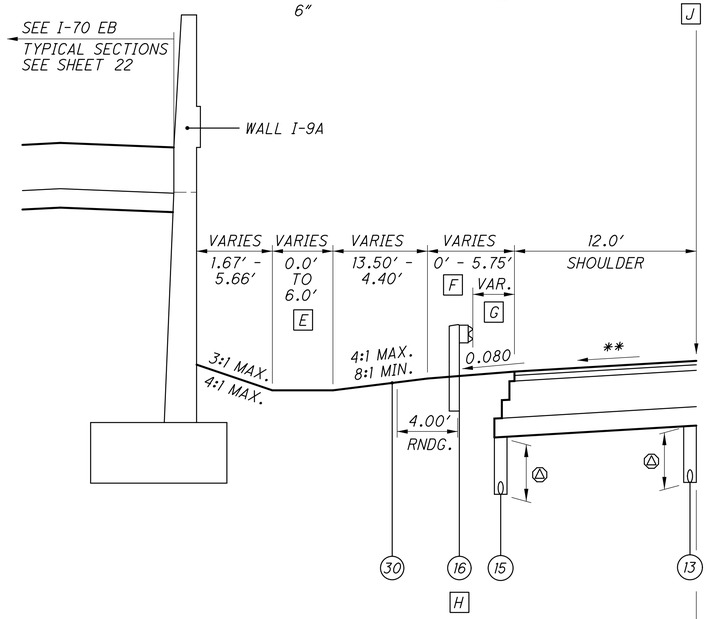

STA. 781+50.00 TO STA. 785+20.79 = 370.79 LIN. FT.

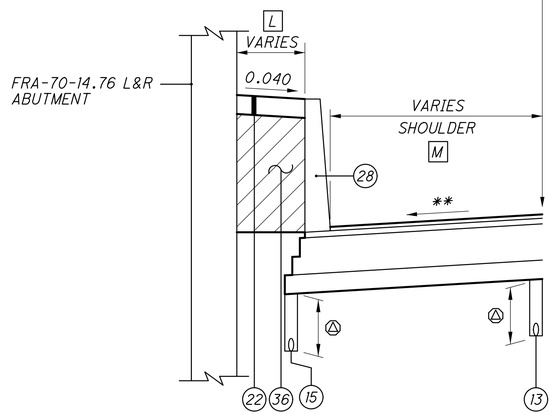

STA. 785+20.79 TO STA. 788+49.33 = 328.54 LIN. FT.

SUPERELEVATED SECTION - RAMP N4

SECTION APPLIES:

STA. 780+13.79 TO STA. 788+49.33 = 835.54 LIN. FT.

ϕ GORE AREA SHOULDER IN TRANSITION, SEE PAVEMENT DETAILS
** VARIES 0.040 OR RATE OF SUPER IF GREATER
*** VARIES 0.011 TO 0.040 MAX.

A STA. 780+13.79 TO STA. 781+07.12 = 12.0′
STA. 781+07.12 TO STA. 784+57.12 = 12.0′ - 13.25′
STA. 784+57.12 TO STA. 788+49.33 = 13.25′

B STA. 780+13.79 TO STA. 781+07.12 = 0.0′
STA. 781+07.12 TO STA. 784+57.12 = 0.0′ - 2.5′
STA. 784+57.12 TO STA. 788+49.33 = 2.5′

C SHOULDER SLOPE TRANSITION
STA. 780+13.79 TO STA. 780+54.35 = -0.0036 TO -0.040

D START 5.00′ ROUNDING AT STA. 782+06.88

E STA. 781+50.00 TO STA. 782+00.00 = 0.0′ - 2.0′
STA. 782+00.00 TO STA. 784+00.00 = 2.0′
STA. 784+00.00 TO STA. 784+50.00 = 2.0′ - 4.0′
STA. 784+50.00 TO STA. 785+00.00 = 4.0′ - 0.0′

F GRADED SHOULDER TAPER
STA. 782+00.00 TO STA. 783+37.75 = 0.0′ - 5.75′

G STA. 783+42.53 TO STA. 783+93.44 = 2.75′
STA. 783+93.44 TO STA. 784+06.22 = 2.75′ - 2.0′
STA. 784+06.22 TO STA. 785+20.79 = 2.0′

H GUARDRAIL FROM STA. 783+42.53 TO STA. 785+20.79

I END TYPE C BARRIER AT STA. 788+43.12

J UNDERDRAIN FROM STA. 781+07.12 TO STA. 788+49.13

K UNDERDRAIN FROM STA. 780+13.79 TO STA. 781+07.12

L STA. 785+20.79 TO STA. 787+82.54 = 4.71′
STA. 787+82.54 TO STA, 788+49.33 = 4.71′ - 0.74′

M STA. 785+20.79 TO STA. 787+82.54 = 14.0′
STA. 787+82.54 TO STA, 788+49.33 = 14.0′ - 17.97′

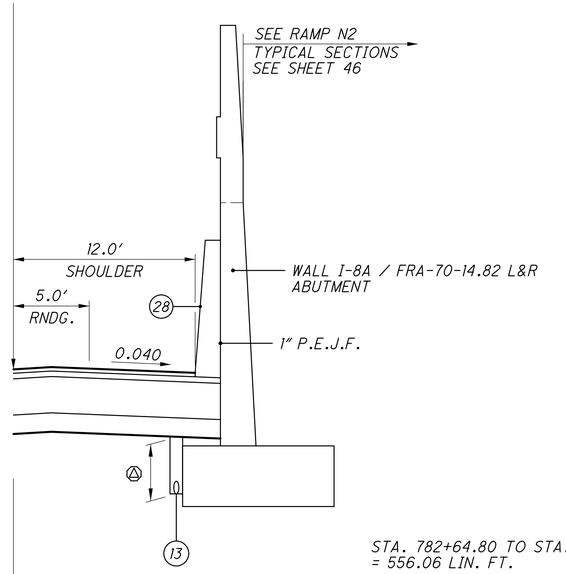

STA. 782+64.80 TO STA. 788+20.86 = 556.06 LIN. FT.

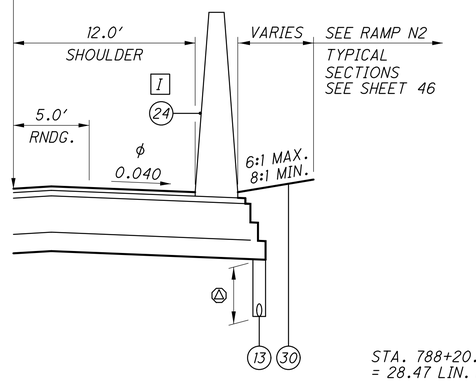

STA. 788+20.86 TO STA. 788+49.33 = 28.47 LIN. FT.

CALCULATED DWH
CHECKED TAZ

TYPICAL SECTIONS - RAMP N4
STA. 780+13.79 TO STA. 788+49.33

FRA-70-14.54

52
2317

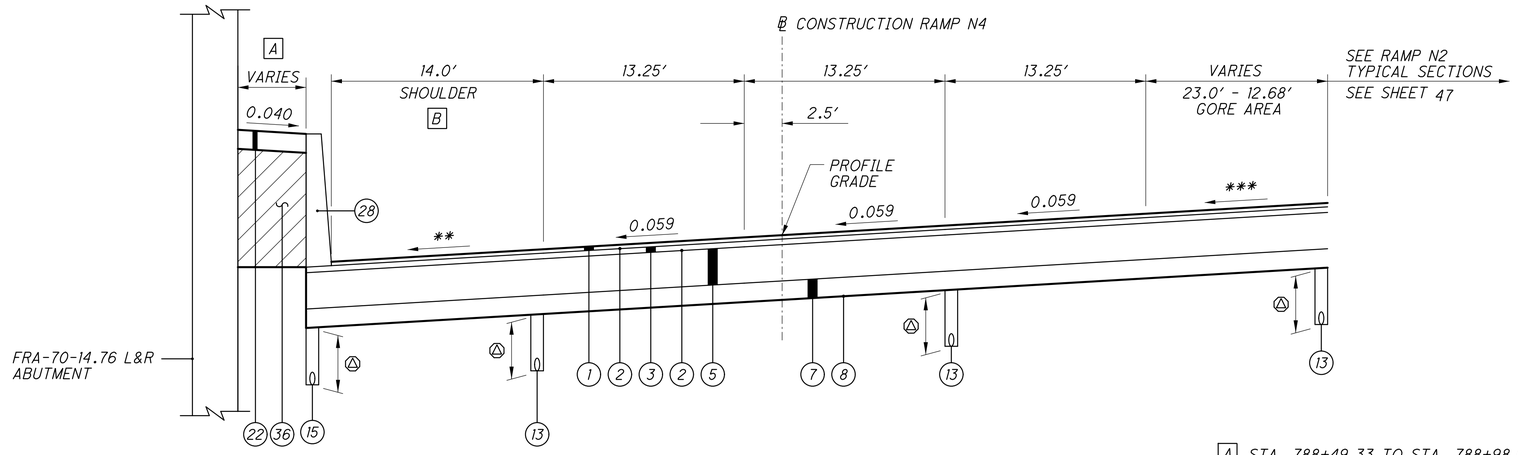

SUPERELEVATED SECTION - RAMP N4

SECTION APPLIES:
STA. 788+49.33 TO STA. 789+90.02 = 140.69 LIN. FT.

** VARIES 0.040 OR RATE OF SUPER IF GREATER
*** SEE INTERCHANGE DETAILS FOR GRADES

A STA. 788+49.33 TO STA. 788+98.66 = 0.74' - 0.083'
STA. 788+98.66 TO STA. 789+90.02 = 0.083'

B STA. 788+49.33 TO STA. 788+98.66 = 17.97' - 18.62'
STA. 788+98.66 TO STA. 789+90.02 = 18.62'

NOTE: SEE SUPERELEVATION TABLES FOR TRANSITION STATIONING AND RATES.

FOR LEGEND. SEE SHEET 17

△ SEE UNDERDRAIN SUB-SUMMARY SHEETS FOR DEPTH AND QUANTITIES.

CROSS REFERENCES	
SHT NO	DESCRIPTION
597-624, 653	PLAN

CALCULATED DWH
CHECKED TAZ

TYPICAL SECTIONS - RAMP N4
STA. 788+49.33 TO STA. 789+90.02

FRA-70-14.54

ms consultants, inc.

PLOT.CEL
ms consultants, inc.
msconsultants.com
Ohio DOT Workspace
70\71 East Interchange 2E
www.msconsultants.com
Batchplot Spec: \\msconsultants.com\files\production\03\60\06634_2E\standards\plotdrv\batchplt.spc
Pen Table: \\msconsultants.com\files\Standards\ustn\ohdot\V8i\ms\plotting\pen\V8i_ms_std.tbl
Plot Driver: \\msconsultants.com\files\Standards\ustn\ohdot\v8i\ms\plotting\PDF.pltcfg
PCF: ohdotV8i
PCF: 60-06634_2E_Columbus
34" x 22"
Model: Sheet
Printed: 6/19/2018 @ 7:56:58 AM
File: N:\03\60\06634_2E\roadway\sheets\105322GY030.dgn
View: SHEET
By: jdouglas

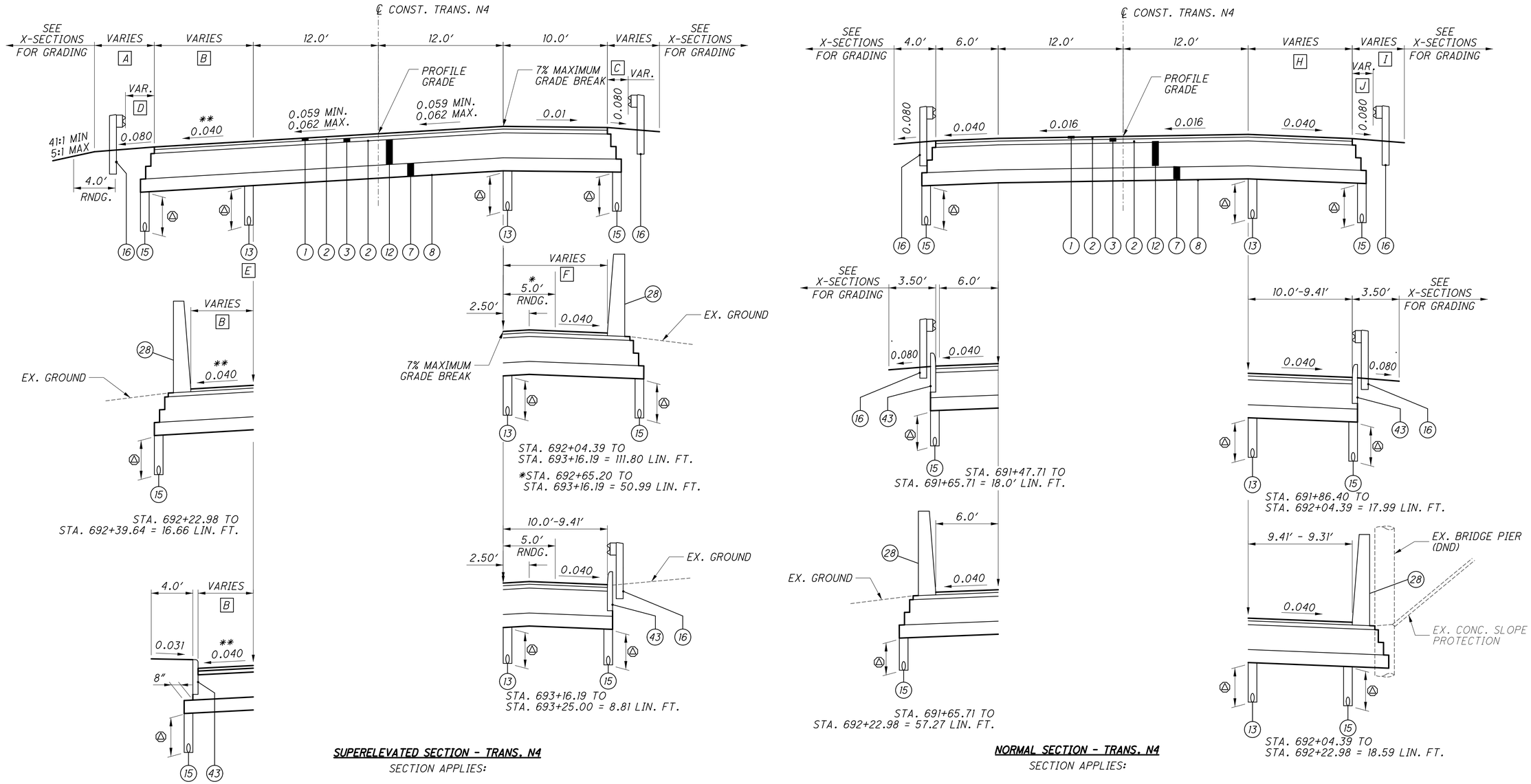

SUPERELEVATED SECTION - TRANS. N4

SECTION APPLIES:

STA. 689+89.23 TO STA. 691+49.18 = 159.95 LIN. FT.
STA. 692+22.98 TO STA. 693+25.00 = 102.02 LIN. FT.

A STA. 689+91.27 TO STA. 691+29.22 = 5.0'
STA. 691+29.22 TO STA. 691+35.39 = 5.0' - 4.0'
STA. 691+35.39 TO STA. 691+65.71 = 4.0'

B STA. 689+90.34 TO STA. 690+85.61 = 9.70' - 6.0'
STA. 690+85.61 TO STA. 691+49.18 = 6.0'
STA. 692+22.98 TO STA. 692+29.78 = 6.0'
STA. 692+29.78 TO STA. 692+39.64 = 6.0' - 5.39'
STA. 692+39.64 TO STA. 692+94.03 = 5.39' - 5.0'
STA. 692+94.03 TO STA. 693+25.00 = 5.0'

C STA. 689+89.23 TO STA. 691+67.62 = 2.0'
STA. 691+67.62 TO STA. 691+80.01 = 2.0' - 0.0'
STA. 691+80.01 TO STA. 693+25.00 = 0.0'

D BEGIN GUARDRAIL AT STA. 690+26.54
STA. 690+26.54 TO STA. 691+28.97 = 2.0'
STA. 691+28.97 TO STA. 691+41.31 = 2.0' - 0.0'
STA. 691+41.31 TO STA. 691+65.71 = 0.0'

E END UNDERDRAIN AT STA. 690+34.69

F STA. 692+22.98 TO STA. 692+26.35 = 9.31' - 9.29'
STA. 692+26.35 TO STA. 692+65.20 = 9.29' - 10.0'
STA. 692+65.20 TO STA. 693+16.19 = 10.0'

NORMAL SECTION - TRANS. N4

SECTION APPLIES:

STA. 691+49.18 TO STA. 692+22.98 = 73.80 LIN. FT.

H STA. 691+49.18 TO STA. 691+89.39 = 10.0'
STA. 691+89.39 TO STA. 692+04.39 = 10.0' - 9.41'

I STA. 691+49.18 TO STA. 691+67.81 = 5.0'
STA. 691+67.81 TO STA. 691+75.40 = 5.0' - 4.0'
STA. 691+75.40 TO STA. 692+04.54 = 4.0'

J STA. 691+49.18 TO STA. 691+67.62 = 2.0'
STA. 691+67.81 TO STA. 691+80.01 = 2.0' - 0.0'
STA. 691+80.01 TO STA. 692+04.39 = 0.0'

CROSS REFERENCES	
SHT NO	DESCRIPTION
653, 661	PLAN

NOTE: SEE SUPERELEVATION TABLES FOR TRANSITION STATIONING AND RATES.

FOR LEGEND. SEE SHEET 17

△ SEE UNDERDRAIN SUB-SUMMARY SHEETS FOR DEPTH AND QUANTITIES.

* ROUNDING APPLIES WHEN SUPER ELEVATION EXCEEDS 3% WITH BARRIER AND 6% WITHOUT BARRIER

** OR RATE OF SUPER IF GREATER

CALCULATED
CHECKED

TRANSITIONAL PAVEMENT TYPICAL SECTIONS N4
STA. 689+89.23 TO STA. 693+25.00

FRA-70-14.54

PLOT.CEL
ms consultants, inc.
msconsultants.com
Ohio DOT Workspace
70\71 East Interchange 2E
www.msconsultants.com
Batchplot Spec: \\msconsultants.com\files\production\03\60\06634_2E\standards\plotdrv\batchplt.spc
Pen Table: \\msconsultants.com\files\Standards\ustn\ohdot\V8i\ms\plotting\pen\V8i_ms_std.tbl
Plot Driver: \\msconsultants.com\files\Standards\ustn\ohdot\v8i\ms\plotting\PDF.pltcfg
34" x 22"
View: FENCE_VIEW1
By: jdouglas
Model: Sheet
Printed: 6/19/2018 @ 7:56:59 AM
File: N:\03\60\06634_2E\roadway\sheets\105322GY100.dgn
ms consultants, inc.

CROSS REFERENCES	
SHT NO	DESCRIPTION
653, 661	PLAN

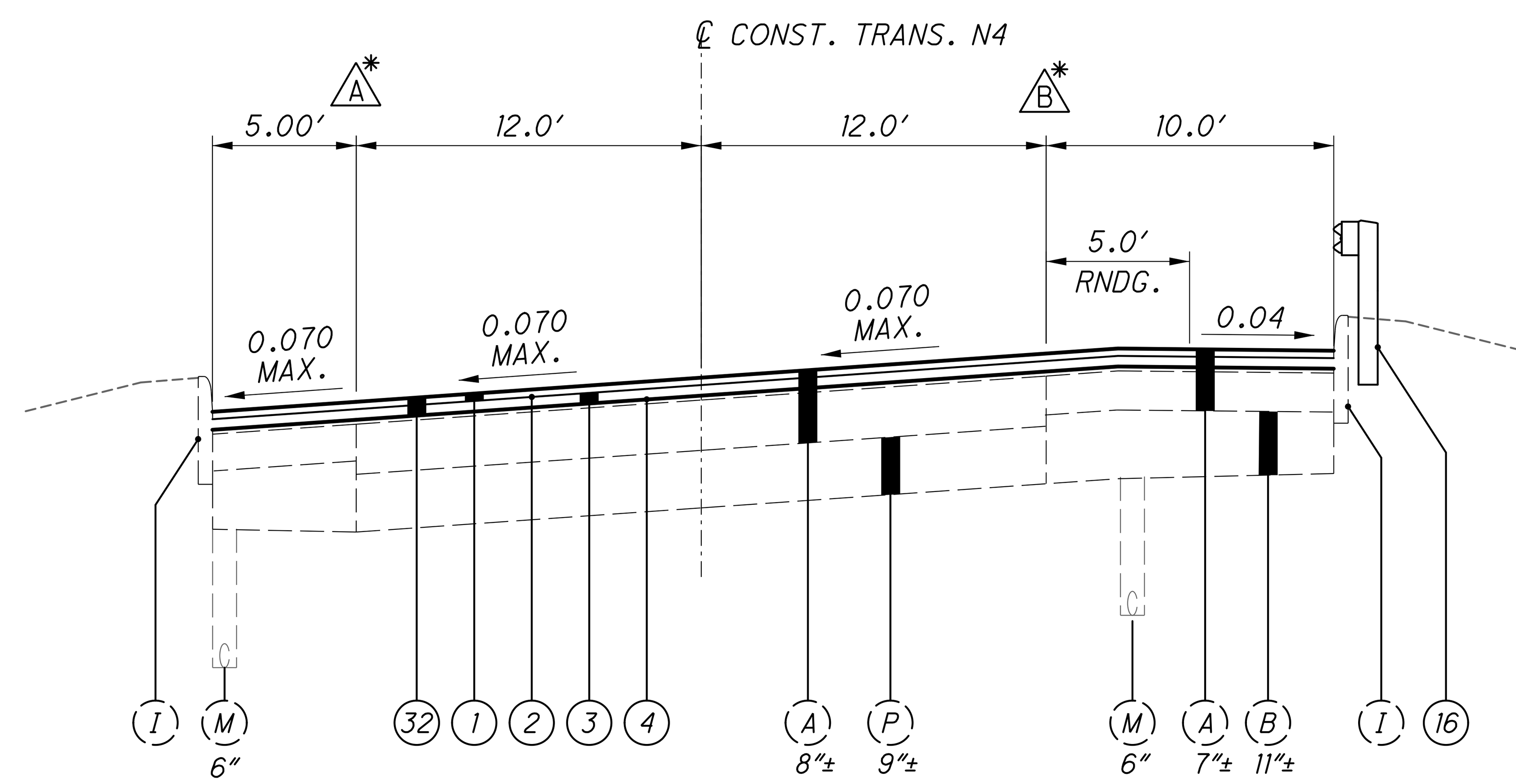

RESURFACING SECTION - TRANS. N4

SECTION APPLIES:

STA. 693+25.00 TO STA. 694+18.27 = 93.27 LIN. FT.

* MILLING DEPTHS		
STA.	A	B
693+25.00	-0.27	-0.43
693+50.00	-0.23	-0.29
694+00.00	-0.16	-0.21

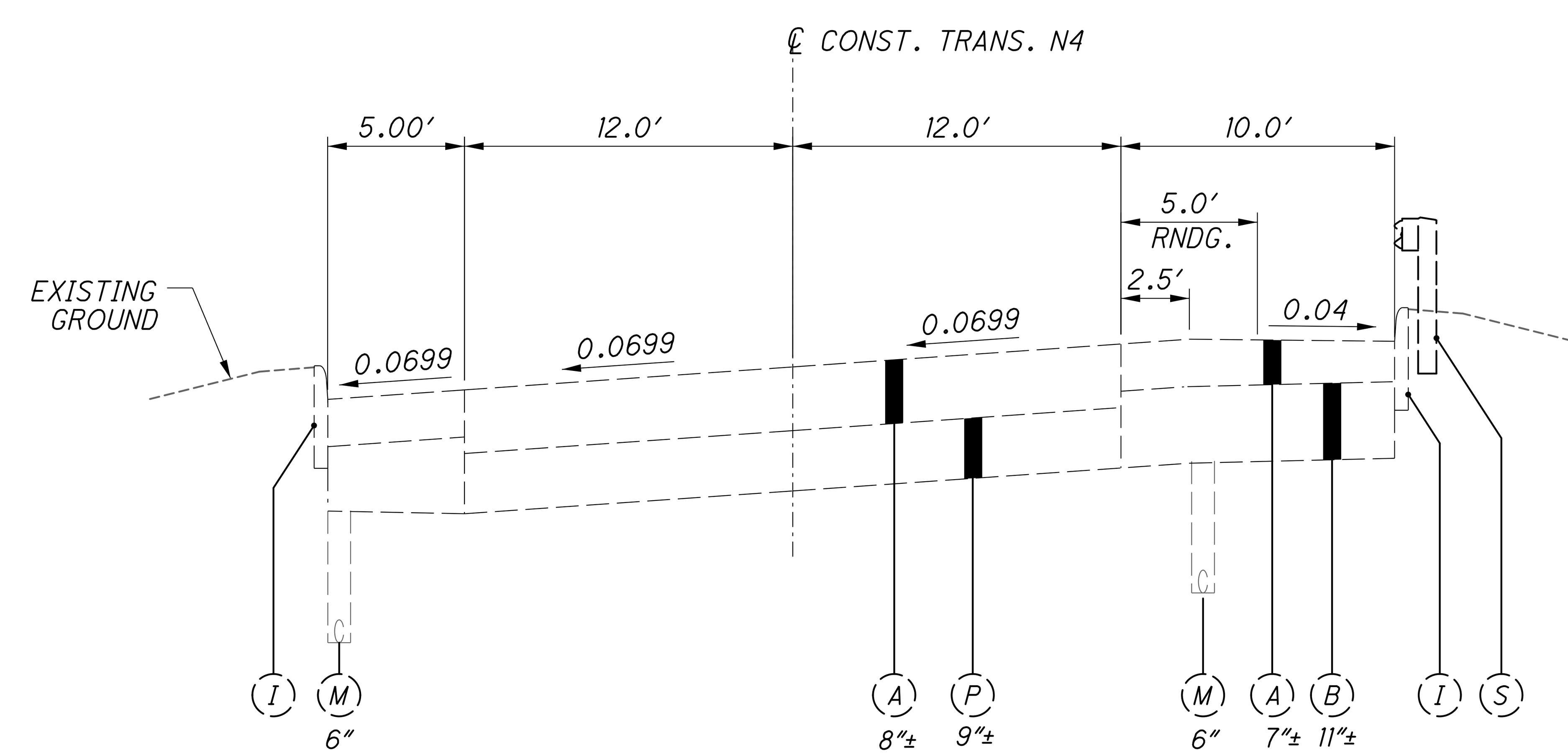

ADJOINING SECTION - TRANS. N4

SECTION APPLIES:

STA. 694+18.27

NOTE: SEE SUPERELEVATION TABLES FOR TRANSITION STATIONING AND RATES.

FOR LEGEND. SEE SHEET 17

(△) SEE UNDERDRAIN SUB-SUMMARY SHEETS FOR DEPTH AND QUANTITIES.

* ROUNDING APPLIES WHEN SUPER ELEVATION EXCEEDS 3% WITH BARRIER AND 6% WITHOUT BARRIER

** OR RATE OF SUPER IF GREATER

CALCULATED | CHECKED

TRANSITIONAL PAVEMENT TYPICAL SECTIONS N4
STA. 693+25.00 TO STA. 694+18.27

FRA-70-14.54

PLOT.CEL
ms consultants, inc.
msconsultants.com
www.msconsultants.com
34" x 22"
Batchplot Spec: \\msconsultants.com\files\production\03\60\06634_2E\standards\plotdrv\batchplt.spc
Pen Table: \\msconsultants.com\files\Production\03\60\06634_2E\deliverables\2018-06-20 2E Submittal_CQC\PDF_PLAN SHEET
Plot Driver: \\msconsultants.com\files\Standards\ustn\ohdot\v8i\ms\plotting\PDF.pltcfg
Model: Sheet View: FENCE_VIEW1
Printed: 6/19/2018 @ 7:57:01 AM By: jdouglas
File: N:\03\60\06634_2E\roadway\sheets\105322GY108.dgn
ms consultants, inc.

PLOT.CEL

ms consultants, inc.
msconsultants.com

www.msconsultants.com

Ohio DOT Workspace
70\71 East Interchange 2E

1"
0.5"
0

Batchplot Spec: \\msconsultants.com\files\production\03\60\06634_2E\standards\plotdrv\batchplt.spc
Pen Table: \\msconsultants.com\files\Standards\usth\ohdot\V8i\ms\plotting\pen\V8i_ms_std.tbl
Plot Driver: \\msconsultants.com\files\Standards\usth\ohdot\V8i\ms\plotting\PDF.pltcfg
PLOT: ohdotV8i
PLOT: 60-06634_2E_Columbus

34" x 22"

Model: Sheet
Printed: 6/19/2018 @ 7:57:02 AM
File: N:\03\60\06634_2E\roadway\sheets\05322G1026A.dgn
View: FENCE_VIEW1
By: jdouglas

CROSS REFERENCES	
SHT NO	DESCRIPTION
599, 631-646	PLAN

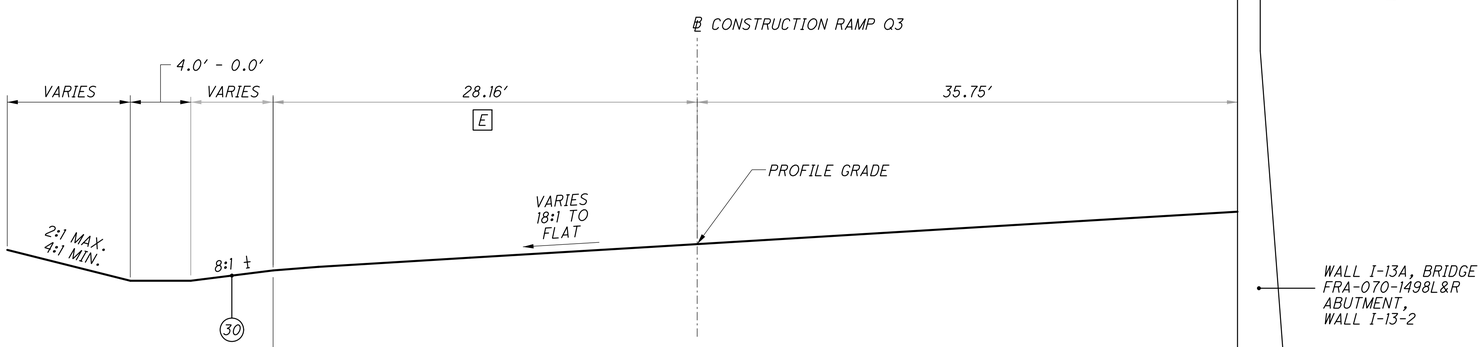

NOTE: SEE SUPERELEVATION TABLES FOR TRANSITION STATIONING AND RATES.

FOR LEGEND. SEE SHEET 17

Ⓐ SEE UNDERDRAIN SUB-SUMMARY SHEETS FOR DEPTH AND QUANTITIES.

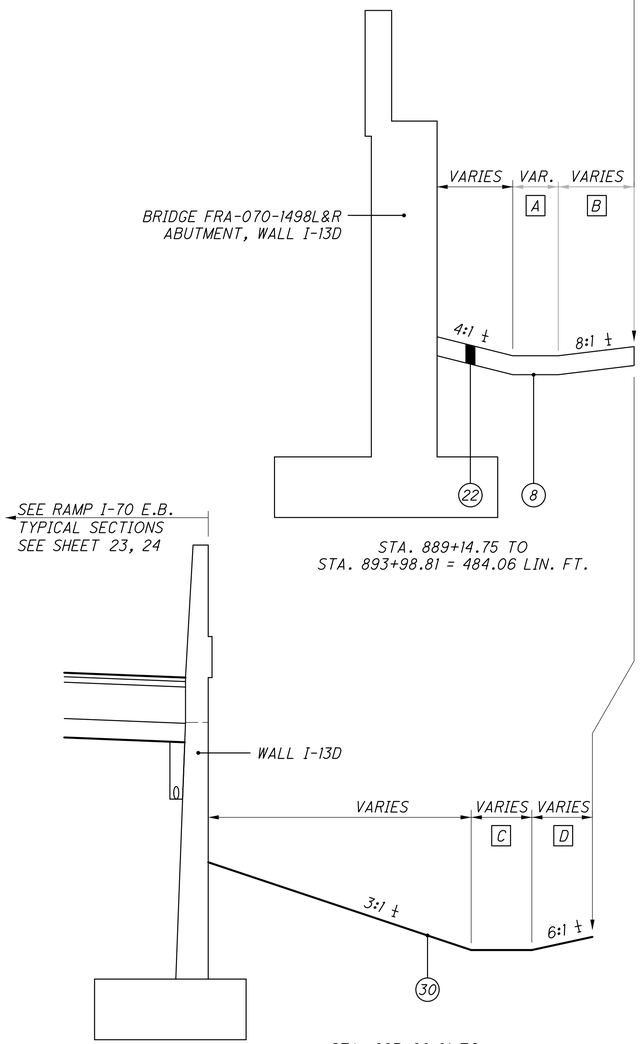

STA. 889+14.75 TO
STA. 893+98.81 = 484.06 LIN. FT.

STA. 893+98.81 TO
STA. 900+73.13 = 674.32 LIN. FT.

GRADED SECTION - RAMP Q3

SECTION APPLIES:

STA. 888+90.00 TO STA. 900+73.13 = 1,183.13 LIN. FT.

± UNLESS OTHERWISE SHOWN IN CROSS SECTIONS

A STA. 889+14.75 TO STA. 889+50.00 = 2.00′ - 0.00′
STA. 889+50.00 TO STA. 893+98.81 = 0.00′

B STA. 889+14.75 TO STA. 889+50.00 = 5.83′ - 7.83′
STA. 889+50.00 TO STA. 893+98.81 = 7.83′

C STA. 894+03.09 TO STA. 894+50.00 = 0.0′
STA. 894+50.00 TO STA. 894+75.00 = 0.0′ - 4.0′
STA. 894+75.00 TO STA. 896+50.00 = 4.0′
STA. 896+50.00 TO STA. 897+00.00 = 4.0′ - 2.0′
STA. 897+00.00 TO STA. 898+00.81 = 2.0′
STA. 898+00.81 TO STA. 898+50.00 = 2.0′ - 0.0′
STA. 898+50.00 TO STA. 900+73.13 = 0.0

D STA. 894+03.09 TO STA. 894+50.00 = 9.41′ - 7.0′
STA. 894+50.00 TO STA. 894+75.00 = 7.0′ - 8.0′
STA. 894+75.00 TO STA. 895+00.15 = 8.0′ - 7.0′
STA. 895+00.15 TO STA. 896+50.00 = 7.0′
STA. 896+50.00 TO STA. 897+00.00 = 7.0′ - 9.0′
STA. 897+00.00 TO STA. 898+71.78 = 9.0′
STA. 898+71.78 TO STA. 899+00.00 = 9.0′ - 0.0′

E STA. 888+90.00 TO STA. 893+98.81 = 28.16′
STA. 893+98.81 TO STA. 898+50.00 = 28.16′ - 22.00′
STA. 898+50.00 TO STA. 899+00.00 = 22.00′ - 29.00′
STA. 899+00.00 TO STA. 900+73.13 = 29.00′ - 26.10′

STA. 893+98.81 TO STA. 901+42.49 = 743.68 LIN. FT.

CALCULATED DWH
CHECKED TAZ

TYPICAL SECTIONS - RAMP Q3
STA. 889+00.00 TO STA. 900+73.13

FRA-70-14.54

ms consultants, inc.

PLOT.CEL

ms consultants, inc.
msconsultants.com

www.msconsultants.com

Ohio DOT Workspace
70\71 East Interchange 2E

1"
0.5"
0

Batchplot Spec: \\msconsultants.com\files\production\03\60\06634_2E\standards\plotdrv\batchplt.spc
Pen Table: \\msconsultants.com\files\Standards\usin\ohdot\V8i\ms\plotting\pen\V8i_ms_std.tbl
Plot Driver: \\msconsultants.com\files\Standards\usin\ohdot\V8i\ms\plotting\PDF.pltcfg
PDF: ohdotV8i
PCF: 60-06634_2E_Columbus

Model: Sheet
Printed: 6/19/2018 @ 7:57:04 AM
File: N:\03\60\06634_2E\roadway\sheets\0532601027.dgn
View: FENCE_VIEW1
By: jdouglas

34" x 22"

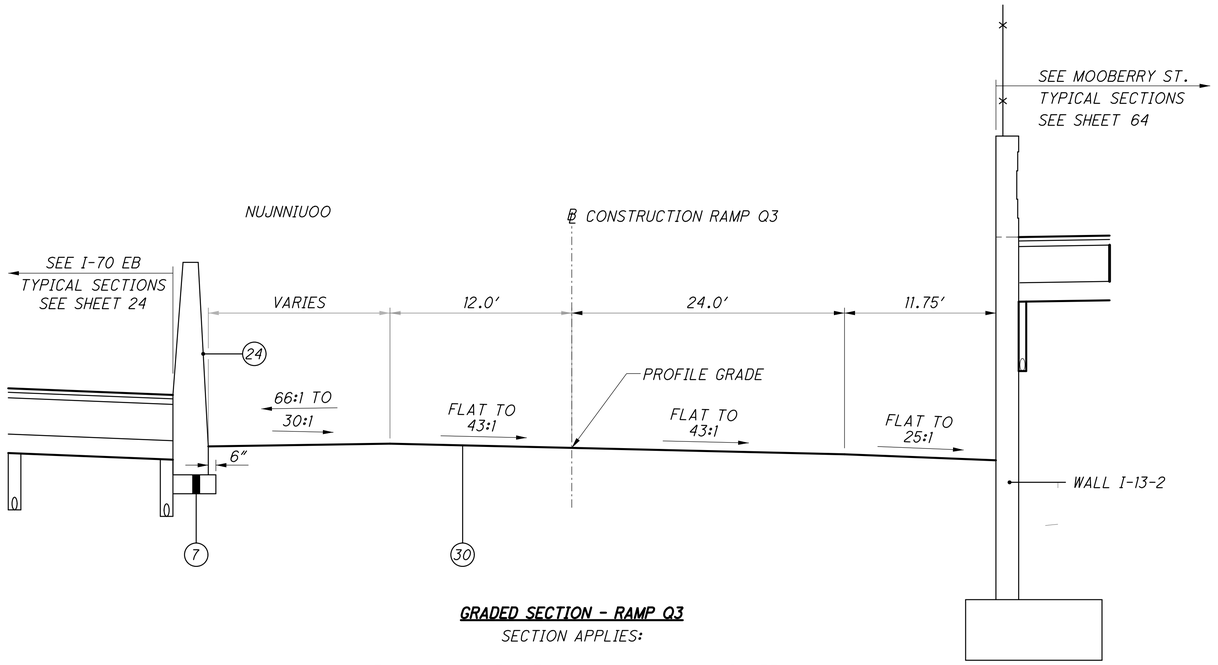

GRADED SECTION - RAMP Q3

SECTION APPLIES:

STA. 900+73.13 TO STA. 901+42.49 = 69.36 LIN. FT.

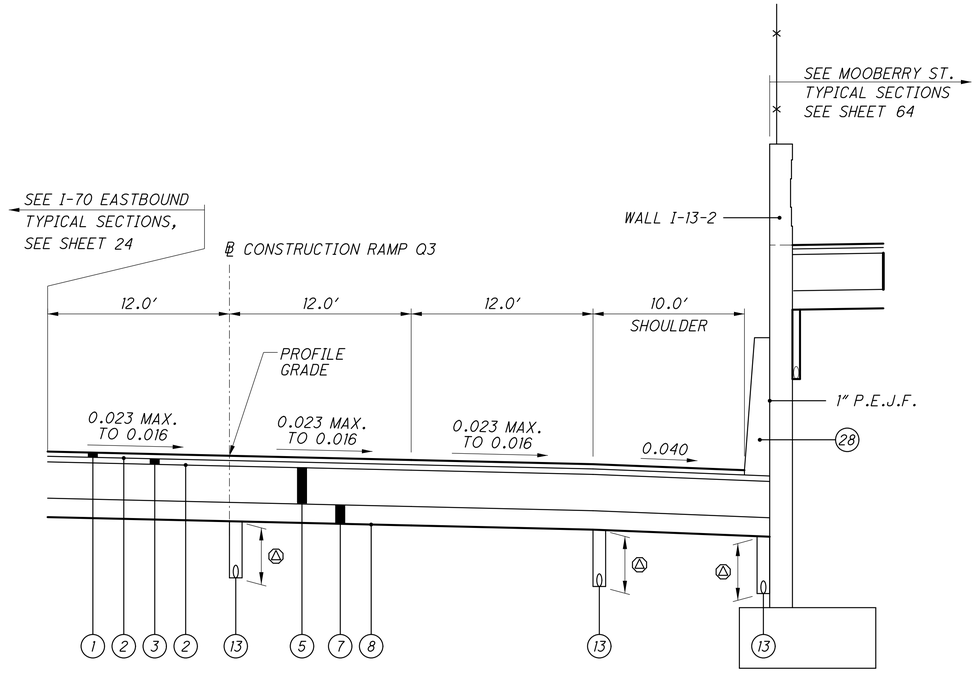

SUPERELEVATED SECTION - RAMP Q3

SECTION APPLIES:

STA. 901+42.49 TO STA. 903+88.87 = 246.38 LIN. FT.

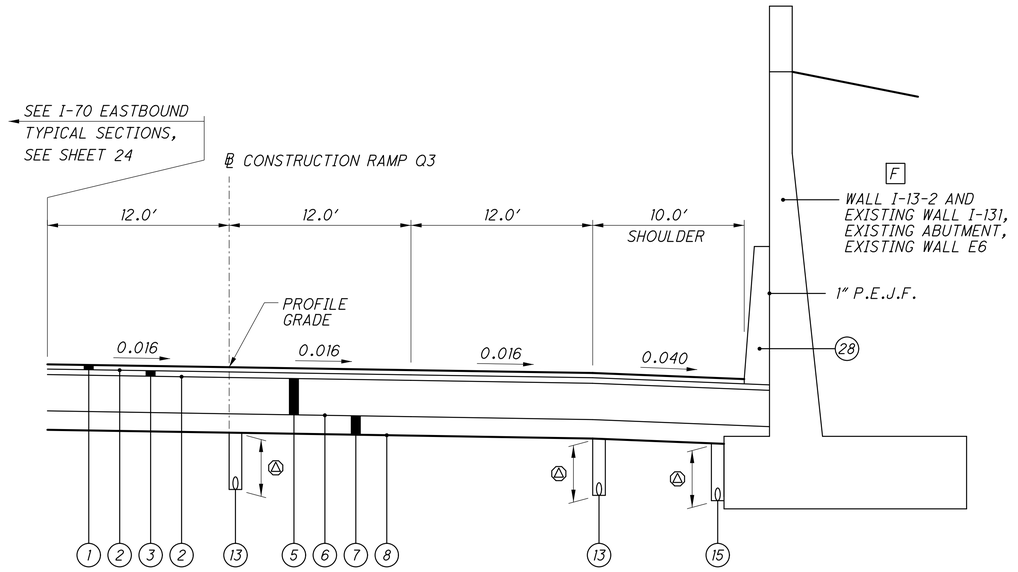

NORMAL SECTION - RAMP Q3

SECTION APPLIES:

STA. 903+88.87 TO STA. 907+33.94 = 345.07 LIN. FT.

NOTE: SEE SUPERELEVATION TABLES FOR TRANSITION STATIONING AND RATES.

FOR LEGEND. SEE SHEET 17

△ SEE UNDERDRAIN SUB-SUMMARY SHEETS FOR DEPTH AND QUANTITIES.

CROSS REFERENCES	
SHT NO	*DESCRIPTION*
599, 631-646	*PLAN*

F END WALL I-13-2 AT STA. 904+25.00, 37.25′ RT.

CALCULATED DWH
CHECKED TAZ

TYPICAL SECTIONS - RAMP Q3
STA. 900+73.13 TO STA. 907.33.94

FRA-70-14.54

57
2317

ms consultants, inc.

PLOT.CEL

ms consultants, inc.
msconsultants.com

CROSS REFERENCES	
SHT NO	DESCRIPTION
599-609	PLAN

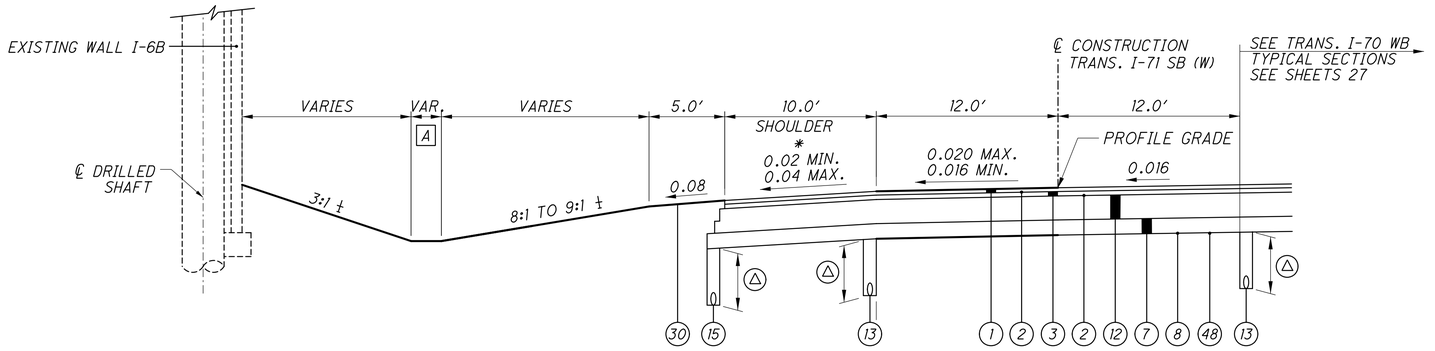

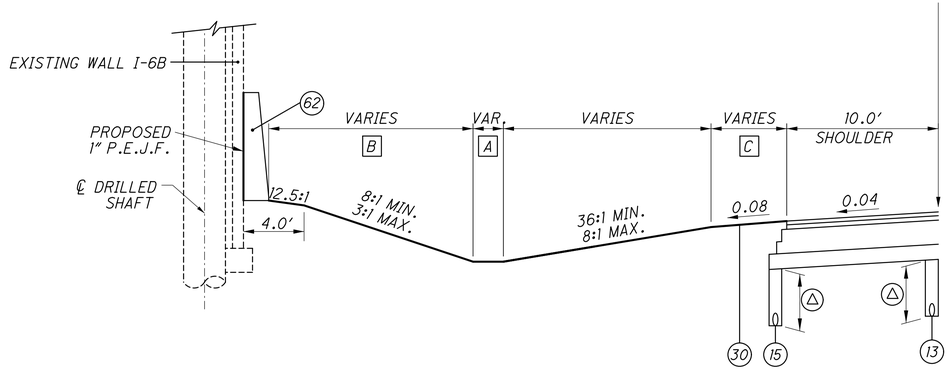

STA. 969+03.60 TO STA. 972+86.23 = 382.63 FT.

NORMAL SECTION - TRANS. I-71 SB (W)

SECTION APPLIES:

STA. 969+03.60 TO STA. 973+29.17 = 425.57 FT.

‡ UNLESS OTHERWISE SHOWN IN CROSS SECTIONS

NOTE: SEE SUPERELEVATION TABLES FOR TRANSITION STATING AND RATES.

FOR LEGEND SEE SHEET 17

△ SEE UNDERDRAIN SUB-SUMMARY SHEETS FOR DEPTH AND QUANTITIES.

* MATCH EXISTING PAVEMENT AT STA. 969+03.60

** VARIES 0.040 OR RATE OF SUPER IF GREATER

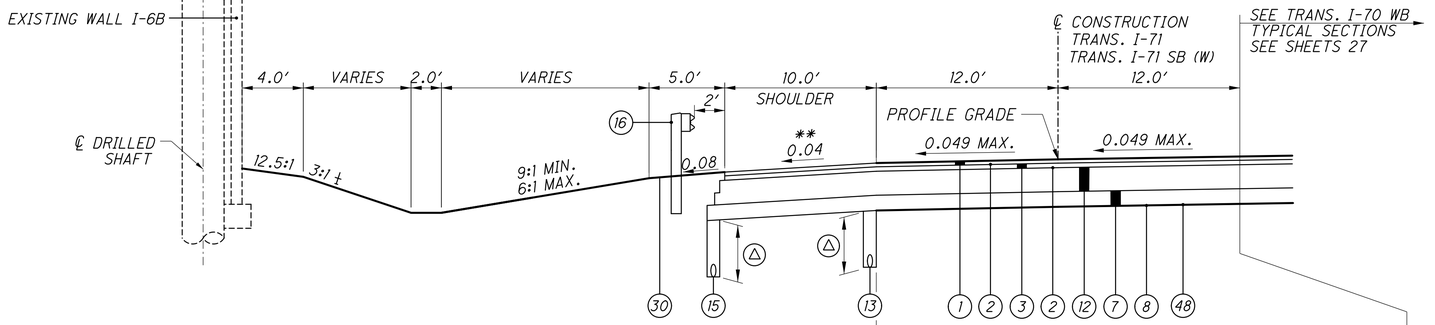

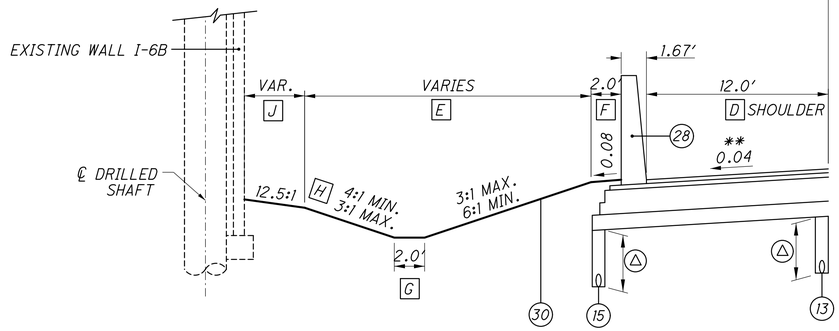

STA. 975+08.82 TO STA. 979+36.33 = 427.51 FT.

SUPERELEVATED SECTION - TRANS. I-71 SB (W)

SECTION APPLIES:

STA. 973+29.17 TO STA. 979+36.33 = 607.16 FT.

‡ UNLESS OTHERWISE SHOWN IN CROSS SECTIONS

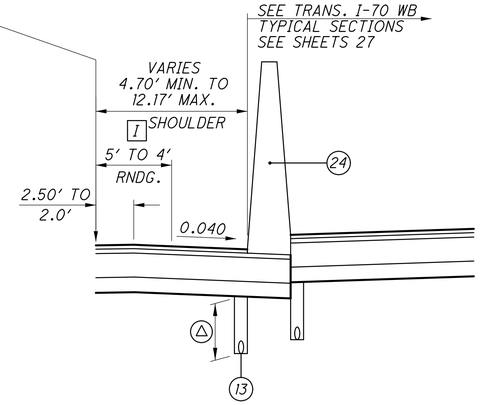

STA 975+20.36 TO STA. 979+36.33 = 415.97 LIN. FT.

[A] STA. 970+00.00 TO STA. 970+50.00 = 0.0′ - 2.0′
STA. 970+50.00 TO STA. 973+29.17 = 2.0′

[B] BACKSLOPE BEGINS AT STA. 970+00.00
STA. 970+00.00 TO STA. 970+50.00 = 0.0′ - 4.25′
STA. 970+50.00 TO STA. 972+86.23 = 4.25′ - 7.38′

[C] GRADED SHOULDER
STA. 972+50.00 TO STA. 972+84.91 = 0.0′ - 5.0′
STA. 972+84.91 TO STA. 972+86.23 = 5.0′

[D] STA. 978+91.38 TO STA. 979+36.33 = 12.0′ - 11.43′

[E] STA. 975+08.82 TO STA. 977+00.00 = 16.08′ - 4.75′
STA. 977+00.00 TO STA. 978+91.38 = 6.75′ - 0.08′
STA. 978+91.38 TO STA. 979+36.33 = 0.08′

[F] GRADED SHOULDER ENDS @ STA. 977+00.00

[G] STA. 975+08.82 TO STA. 975+50.00 = 2.0′
STA. 975+50.00 TO STA. 976+00.00 = 2.0′ - 0.0′
STA. 976+00.00 TO STA. 978+91.38 = 0.0′

[H] BACKSLOPE ENDS AT STA. 978+00.00

[I] FROM STA. 978+00.00 TO STA. 978+25.00

[J] STA. 975+08.82 TO STA. 976+50.00 = 4.0′
STA. 976+50.00 TO STA. 977+50.00 = 4.0′ - 0.0′
STA. 977+50.00 TO STA. 979+36.33 = 0.0′

TYPICAL SECTIONS - TRANS. I-71 SB (W)
STA. 969+03.60 TO STA. 979+36.33

FRA-70-14.54

58
2317

ms consultants, inc.

Batchplot Spec: \\msconsultants.com\files\production\03\60\06634_2E\standards\plotdrv\batchplt.spc
Pen Table: N:\03\60\06634_2E\standards\tables\V8i_ms_std_06634_2D_Plan View.tbl
Plot Driver: \\msconsultants.com\files\Standards\ustn\ohdot\v8i\ms\plotting\PDF.pltcfg
Model: SHEET 1 View: FENCE_VIEW1
Printed: 6/19/2018 @ 7:57:05 AM By: jdouglas
File: N:\03\60\06634_2E\roadway\sheets\Sheets from 2LMN\77370_GY00212LMN1.dgn
ODF: ohdot\v8i PCF: 60-06634_2E_Columbus
Ohio DOT Workspace
70\71 East Interchange 2E
www.msconsultants.com
1" 0.5" 0
34" x 22"

PLOT.CEL

ms consultants, inc.
msconsultants.com

www.msconsultants.com

Ohio DOT Workspace
70\71 East Interchange 2E

PCF: 60-06634_2E_Columbus
DF: ohdot\V8i

Batchplot Spec: \\msconsultants.com\files\production\03\60\06634_2E\standards\plotdr\batchplt.spc
Pen Table: N:\03\60\06634_2E\standards\tables\V8i_ms_std_06634_2D_Plan View.tbl
Plot Driver: \\msconsultants.com\files\Standards\usin\ohdot\v8i\ms\plotting\PDF.pltcfg

Model: SHEET 1
Printed: 6/19/2018 @ 7:57:06 AM
File: N:\03\60\06634_2E\roadway\Sheets\Sheets from 2LMN\773170_GY00412LMN.dgn

View: FENCE_VIEW1
By: jdouglas

34" x 22"

CROSS REFERENCES	
SHT NO	DESCRIPTION
599-609	PLAN

NOTE: SEE SUPERELEVATION TABLES FOR TRANSITION STATING AND RATES.

FOR LEGEND SEE SHEET 17

△ SEE UNDERDRAIN SUB-SUMMARY SHEETS FOR DEPTH AND QUANTITIES.

* TIE INTO EXISTING DITCH AT STA. 983+38.11.

** VARIES 0.040 OR RATE OF SUPER IF GREATER

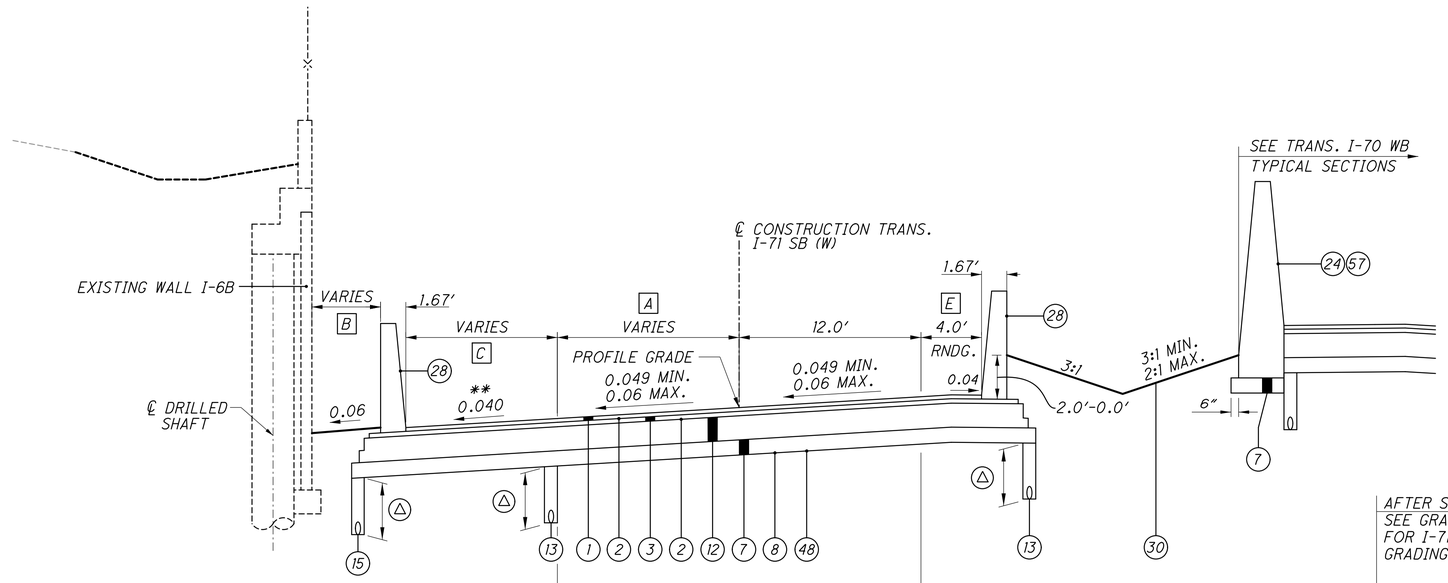

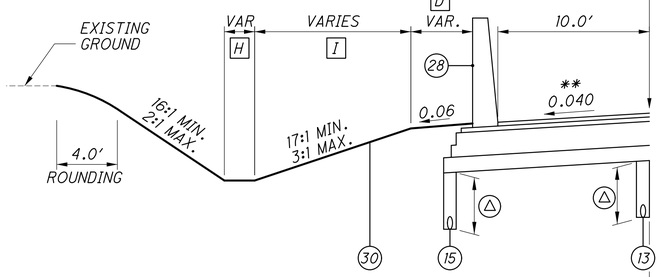

STA. 982+50.00 TO STA. 986+00.00 = 350 LIN. FT.
STA. 987+00.00 TO STA. 989+30.74 = 230.74 LIN. FT.

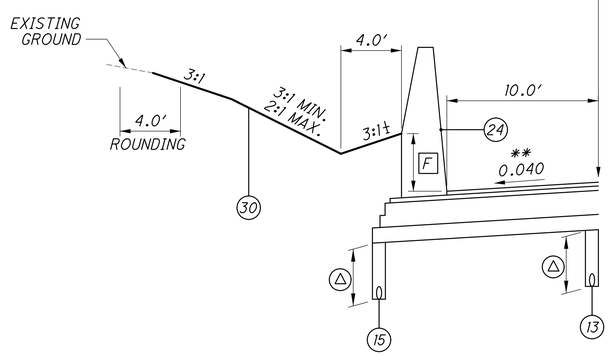

STA. 986+00.00 TO STA. 987+00.00 = 100 LIN. FT.

SUPERELEVATED SECTION - TRANS. I-71 SB (W)

SECTION APPLIES:

STA. 979+36.33 TO STA. 989+30.74 = 994.41 LIN. FT.

‡ UNLESS OTHERWISE SHOWN IN CROSS SECTIONS

AFTER STA. 983+00.00
SEE GRADING PLAN FOR I-71 SB GRADING

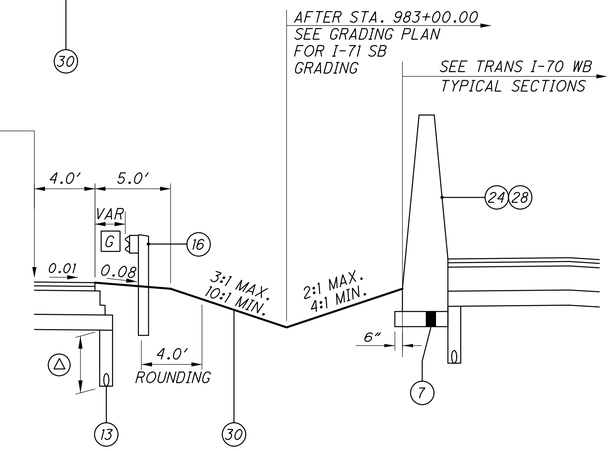

STA. 982+00.00 TO STA. 989+30.74 = 730.74 LIN. FT.

A STA. 979+36.33 TO STA. 980+96.33 = 12.0′ - 14.75′
STA. 980+96.33 TO STA. 989+30.74 = 14.75

B STA. 979+36.33 TO STA. 980+92.02 = 0.083′
STA. 980+92.02 TO STA. 981+11.22 = 0.083′ - 2.52′
STA. 981+11.22 TO STA. 982+50.00 = 2.52′ - 8.75′

C STA. 979+36.33 TO STA. 980+91.96 = 11.43′ - 12.0′
STA. 980+91.96 TO STA. 981+11.12 = 12.0′ - 10.0′
STA. 981+11.12 TO STA. 982+50.00 = 10.0′

D STA. 982+50.00 TO STA. 986+00.00 = 3.33′
STA. 986+00.00 TO STA. 986+25.00 = 3.33′ - 0.0′
STA. 987+00.00 TO STA. 989+30.74 = 0.0′

E STA. 979+36.33 TO STA. 980+78.06 = 4.70′ - 10.0′
STA. 980+78.06 TO STA. 982+00.00 = 4.0′

F STA. 986+00.00 TO STA. 986+25.00 = 0.0′ - 1.0′
STA. 986+25.00 TO STA. 986+46.80 = 1.0′ - 2.0′
STA. 986+46.80 TO STA. 986+69.48 = 2.0′
STA. 986+69.48 TO STA 987+00.00 = 2.0′ - 0.0′

G STA. 982+00.00 TO STA. 982+24.03 = 0.0′
STA. 982+24.03 TO STA. 982+36.17 = 0.0′ - 2.0′
STA. 982+36.17 TO STA. 983+09.89 = 2.0

H STA. 982+50.00 TO STA. 983+38.11 * = 0.0′
STA. 983+50.00 TO STA. 984+50.00 = 0.0′ - 2.0′
STA. 984+50.00 TO STA. 986+00.00 = 2.0′
STA. 987+00.00 TO STA. 987+50.00 = 0.0′ - 1.0′
STA. 987+50.00 TO STA. 989+00.00 = 1.0′
STA. 989+00.00 TO STA. 989+14.67 = 1.0′ - 4.0′
STA. 989+14.67 TO STA. 989+30.74 = 4.0′ - 2.74′

I STA. 982+50.00 TO STA. 983+38.11 * = 3.65′ - 16.93′
STA. 983+50.00 TO STA. 984+50.00 = 6.00′ - 10.00′
STA. 984+50.00 TO STA. 985+50.00 = 10.00′
STA. 985+50.00 TO STA. 986+00.00 = 10.00′ - 12.29′
STA. 987+00.00 TO STA. 987+50.00 = 5.00′ - 2.83′
STA. 987+50.00 TO STA. 989+00.00 = 2.83′
STA. 989+00.00 TO STA. 989+14.67 = 2.83′ - 1.33′
STA. 989+14.67 TO STA. 989+30.74 = 1.33′ - 2.09′

TYPICAL SECTIONS - TRANS. I-71 SB (W)
STA. 979+36.33 TO STA. 989+30.74

FRA-70-14.54

ms consultants, inc.

CROSS REFERENCES	
SHT NO	DESCRIPTION
599-609	PLAN

NOTE: SEE SUPERELEVATION TABLES FOR TRANSITION STATING AND RATES.

FOR LEGEND SEE SHEET 17

△ SEE UNDERDRAIN SUB-SUMMARY SHEETS FOR DEPTH AND QUANTITIES.

** OR RATE OF SUPER IF GREATER

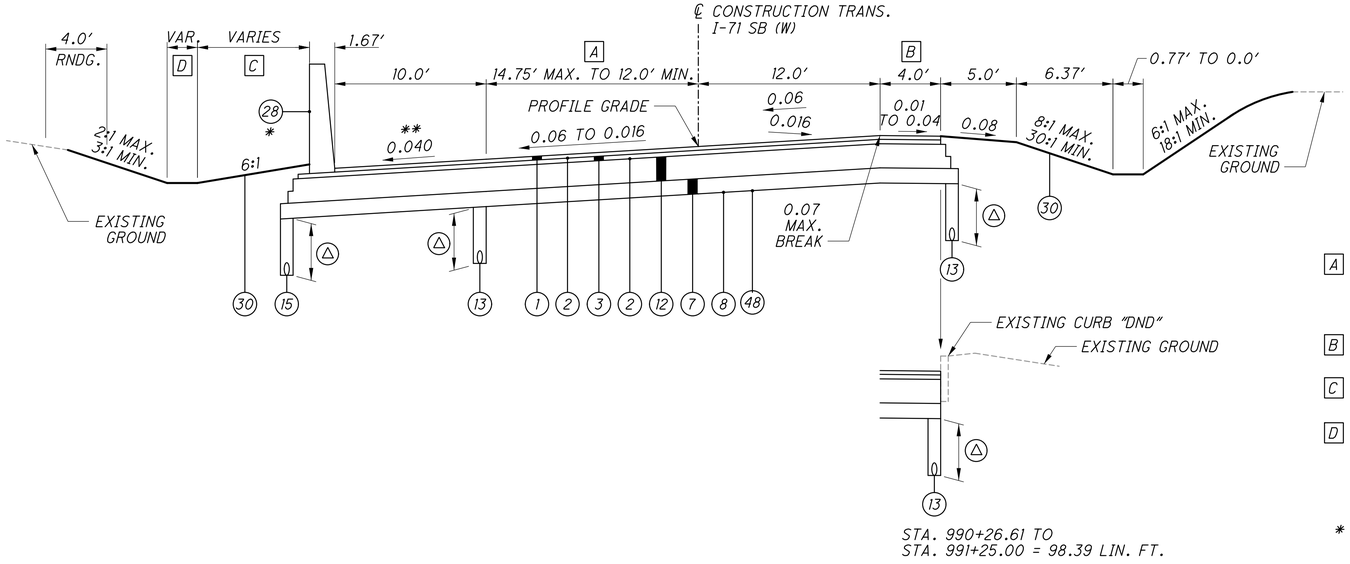

A TAPERS FROM 14.75′ AT STA. 989+56.91 TO 12.00′ AT STA. 991+16.21

12.00′ FROM STA. 991+16.21 TO STA. 991+25.00

B TAPERS FROM 4.0′ AT STA. 989+60.52 TO 8.9′ AT STA. 991+25.00

C STA. 989+30.74 TO STA. 989+50.00 = 2.09′ - 2.83′
STA. 989+50.00 TO STA. 991+25.00 = 2.83′

D STA. 989+30.74 TO STA. 989+50.00 = 2.74′ - 1.00′
STA. 989+50.00 TO STA. 991+25.00 = 1.00′

* AFTER STA. 991+25.00 REPLACE EXISTING CURB WITH TYPE "D" BARRIER, TIE PROPOSED BARRIER IN WITH EXISTING JERSEY TYPE D BARRIER AT STA. 992+04.01

SUPERELEVATED SECTION - TRANS. I-71 SB (W)

SECTION APPLIES:
STA. 989+30.74 TO STA. 991+25.00 = 194.26 FT.

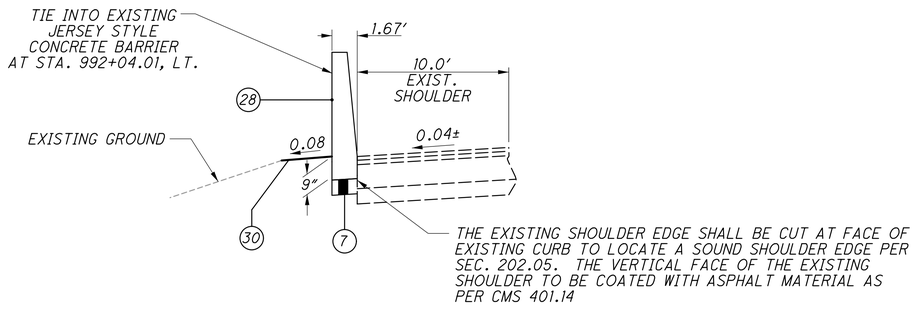

*** BARRIER SECTION - TRANS. I-71 SB (LT.) (W)**

SECTION APPLIES:
STA. 991+25.00 TO STA. 992+04.01 = 79.01 FT.

TYPICAL SECTIONS - TRANS. I-71 SB (W)
STA. 989+30.74 TO STA. 991+25.00

FRA-70-14.54

ms consultants, inc.

PLOT.CEL

ms consultants, inc.
msconsultants.com

Ohio DOT Workspace
70\71 East Interchange 2E
www.msconsultants.com

Batchplot Spec: \\msconsultants.com\files\production\03\60\06634_2E\standards\plotdrv\batchplt.spc
Pen Table: \\msconsultants.com\files\Standards\ustn\ohdot\V8i\ms\plotting\pen\V8i_ms_std.tbl
Plot Driver: \\msconsultants.com\files\Standards\ustn\ohdot\v8i\ms\plotting\PDF.pltcfg

34" x 22"

Model: Default
Printed: 1/11/2019 @ 9:18:20 AM
File: \\msconsultants.com\files\Production\03\60\06634_2E\roadway\sheets\0099_105322GY002.dgn
View: FENCE_VIEW1
By: dhall

SM FOR SEEING AND MULCHING PAY ITEM AND QUANTITIES, REFER TO THE LANDSCAPE PLANTING PLANS

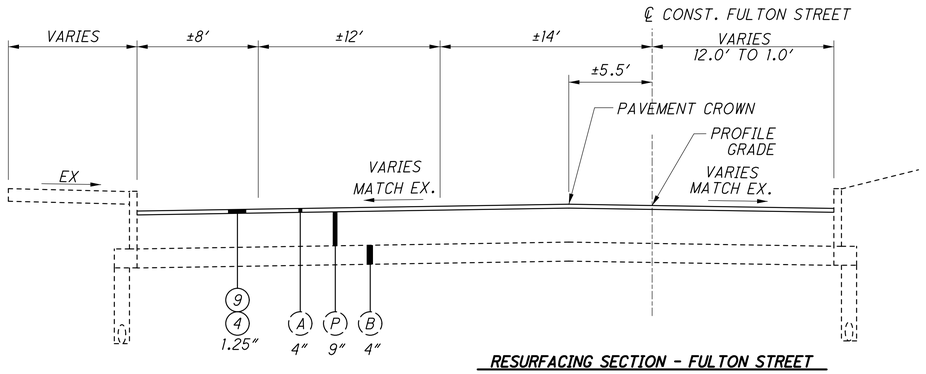

RESURFACING SECTION - FULTON STREET

SECTION APPLIES:

STA. 24+58.11 TO STA. 31+74.08 = 715.97 FT

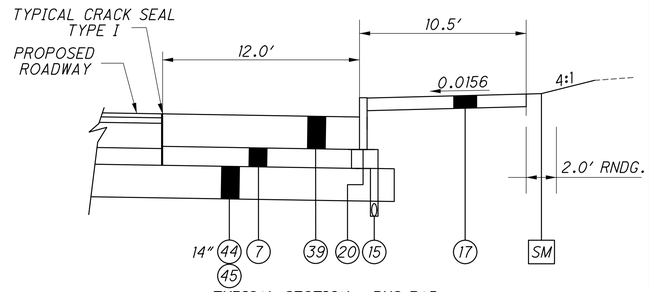

TYPICAL SECTION - BUS PAD

SECTION APPLIES:

STA. 37+00.35 TO STA. 37+50.00 = 49.65 FT

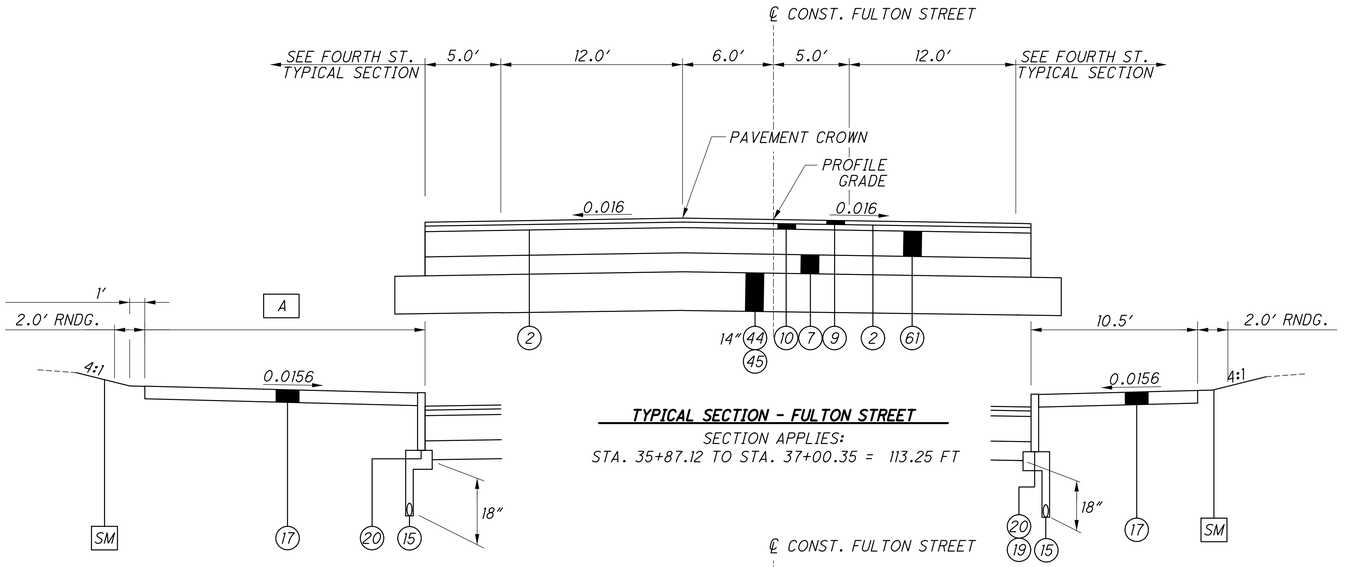

TYPICAL SECTION - FULTON STREET

SECTION APPLIES:

STA. 35+87.12 TO STA. 37+00.35 = 113.25 FT

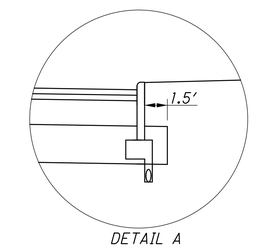

DETAIL A
UNDERCUT LIMITS

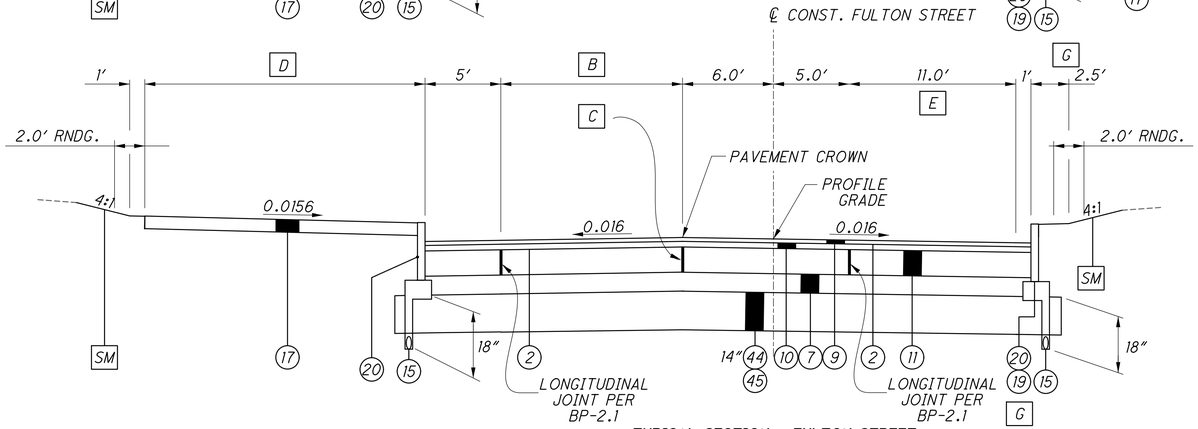

TYPICAL SECTION - FULTON STREET

SECTION APPLIES:

STA. 31+74.08 TO STA. 32+13.34 = 39.26 FT
STA. 33+61.34 TO STA. 35+87.12 = 228.78 FT
STA. 37+00.35 TO STA. 37+16.91 = 16.54 FT

A 24.5' FROM STA. 35+87.12 TO STA. 36+16.12
24.7' FROM STA. 36+57.63 TO STA. 37+00.35

B 12.0' FROM STA. 31+74.08 TO STA. 32+13.34
12.0' FROM STA. 33+61.34 TO STA. 35+87.12
11.0' FROM STA. 37+00.35 TO STA. 37+50.00

C STA. 31+74.08 TO STA. 32+13.34 = LONGITUDINAL JOINT PER BP-2.1

STA. 33+61.34 TO STA. 35+87.12 = LONGITUDINAL JOINT PER BP-2.1

STA. 37+00.35 TO STA. 37+50.00 = CONSTRUCTION JOINT PER BP-2.2

D 24.0' FROM STA. 31+74.08 TO STA. 32+13.34
23.7' FROM STA. 33+61.34 TO STA. 33+86.09
24.5' FROM STA. 34+06.09 TO STA. 35+87.12
24.7' FROM STA. 37+00.35 TO STA. 37+16.91

E SEE BUS PAD TYPICAL SECTION
STA. 37+00.35 TO STA. 37+50.00

G USE 19 FROM STA. 31+74.08 TO STA 31+97.63
USE 20 FROM STA. 31+97.63 TO STA 35+89.92 & STA. 37+00.35 TO STA. 37+50.00

CROSS REFERENCES	
SHT NO	DESCRIPTION
17	LEGEND
716-721	PLAN

CALCULATED AMF
CHECKED CSR

PROPOSED TYPICAL SECTIONS - FULTON STREET

FRA-70-14.54

ms consultants, inc.

PLOT.CEL

ms consultants, inc.
msconsultants.com

www.msconsultants.com

Ohio DOT Workspace
70\71 East Interchange 2E

1"
0.5"
0

PDF: ohdot\V8i
PCF: 60-06634_2E_Columbus

Batchplot Spec: \\msconsultants.com\files\production\Q3\60\06634_2E\standards\plotdr\batchplt.spc
Pen Table: \\msconsultants.com\files\Standards\ustn\ohdot\V8i\ms\plotting\pen\V8i_ms_std.tbl
Plot Driver: \\msconsultants.com\files\Standards\ustn\ohdot\v8i\ms\plotting\PDF.pltcfg

Model: Default
Printed: 6/19/2018 @ 7:57:10 AM
File: N:\Q3\60\06634_2E\roadway\sheets\0100_105226Y002.dgn

View: FENCE_VIEW1
By: jdouglas

34" x 22"

SM FOR SEEING AND MULCHING PAY ITEM AND QUANTITIES, REFER TO THE LANDSCAPE PLANTING PLANS

A VARIES FROM 0′ AT STA. 32+13.34 TO 8′ AT STA. 32+21.34
8′ FROM STA. 32+21.34 TO STA. 33+53.34
VARIES FROM 8′ AT STA. 33+53.34 TO 0′ AT STA. 33+61.34

B VARIES FROM 24.0′ AT STA. 32+13.34 TO 16.0′ AT STA. 32+21.34
VARIES FROM 16.0′ AT STA. 32+21.34 TO 15.7′ AT STA. 33+53.34
VARIES FROM 15.7′ AT STA. 33+53.34 TO 23.7′ AT STA. 33+61.34

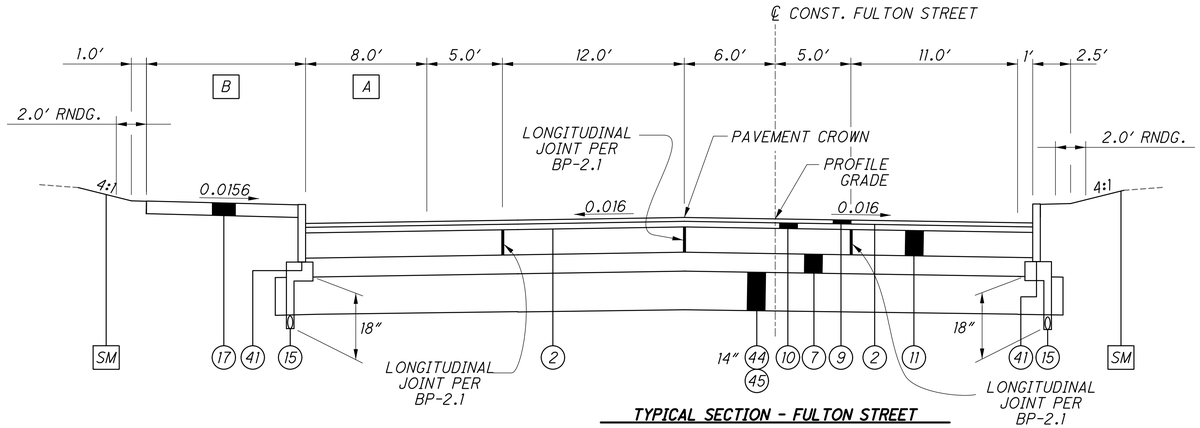

TYPICAL SECTION - FULTON STREET

SECTION APPLIES:
STA. 32+13.34 TO STA. 33+61.34 = 148.00 FT

C VARIES FROM 0′ AT STA. 37+16.91 TO 8′ AT STA. 37+24.91
8′ FROM STA. 37+24.91 TO STA. 37+50.00

D SEE BUS PAD TYPICAL SECTION, SHEET 61
STA. 37+16.91 TO STA. 37+50.00

E VARIES FROM 24.7′ AT STA. 37+16.91 TO 16.7′ AT STA. 37+24.91
16.7′ FROM STA. 37+24.91 TO 37+50.00

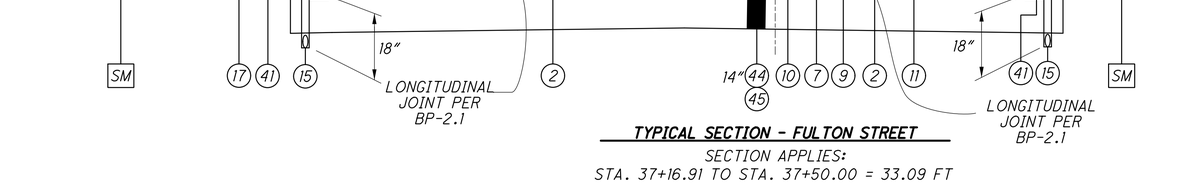

TYPICAL SECTION - FULTON STREET

SECTION APPLIES:
STA. 37+16.91 TO STA. 37+50.00 = 33.09 FT

CROSS REFERENCES	
SHT NO	DESCRIPTION
17	LEGEND
716-721	PLAN

CALCULATED AMF
CHECKED CSR

PROPOSED TYPICAL SECTIONS - FULTON STREET

FRA-70-14.54

62
2317

ms consultants, inc.

PLOT.CEL

ms consultants, inc.
msconsultants.com

www.msconsultants.com

Ohio DOT Workspace
70\71 East Interchange 2E

Batchplot Spec: \\msconsultants.com\files\production\03\60\06634_2E\standards\plotdrv\batchplt.spec
Pen Table: \\msconsultants.com\files\Standards\ustn\ohdot\V8i\ms\plotting\pen\V8i_ms_std.tbl
Plot Driver: \\msconsultants.com\files\Standards\ustn\ohdot\v8i\ms\plotting\PDF.pltcfg
PDF: ohdotV8i
PCF: 60-06634_2E_Columbus

Model: Default
Printed: 6/19/2018 @ 7:57:12 AM
File: N:\03\60\06634_2E\roadway\sheets\00998_1053220Y002.dgn
View: FENCE_VIEW1
By: jdouglas

34" x 22"

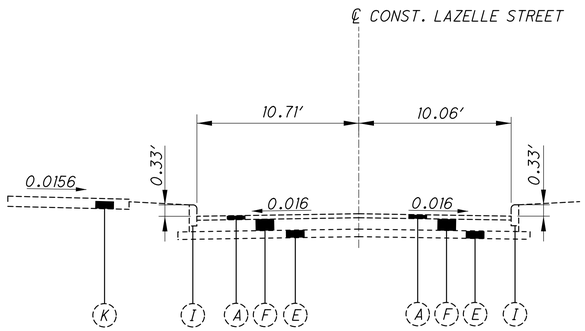

ADJOINING TYPICAL SECTION - LAZELLE STREET

SECTION APPLIES:
STA. 10+57.45

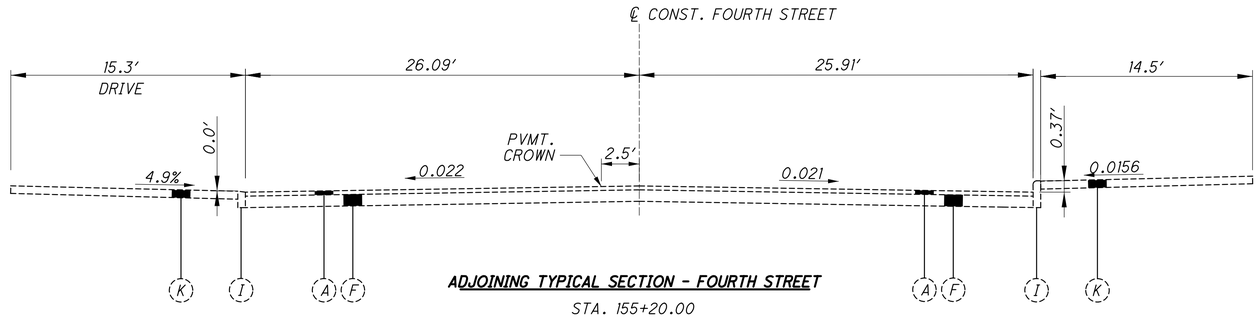

ADJOINING TYPICAL SECTION - FOURTH STREET

STA. 155+20.00

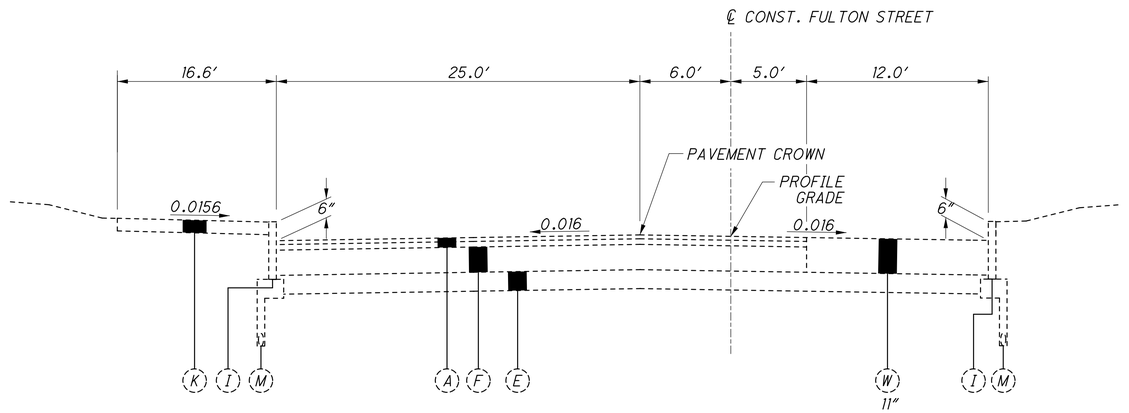

ADJOINING TYPICAL SECTION - FULTON STREET

SECTION APPLIES:
STA. 37+50.00

CROSS REFERENCES	
SHT NO	DESCRIPTION
17	LEGEND
718, 721	LAZELLE ST. PLAN SHEETS
721	FOURTH ST. PLAN SHEETS
721	FULTON ST. PLAN SHEETS

CALCULATED ACF
CHECKED CSR

EXISTING TYPICAL SECTIONS

FRA-70-14.54

63
2317

PLOT.CEL

ms consultants, inc.
msconsultants.com

www.msconsultants.com

Ohio DOT Workspace
70\71 East Interchange 2E

PDF: ohdot\V8i
Ref: 60-06634_2E_Columbus

Batchplot Spec: \\msconsultants.com\files\production\Q3\60\06634_2E\standards\plotdr\batchplt.spc
Pen Table: \\msconsultants.com\files\Standards\ustn\ohdot\V8i\ms\plotting\pen\V8i_ms_std.tbl
Plot Driver: \\msconsultants.com\files\Standards\ustn\ohdot\v8i\ms\plotting\PDF.pltcfg

Model: Sheet
Printed: 6/19/2018 @ 7:57:14 AM
File: N:\Q3\60\06634_2E\roadway\sheets\105320701 7.dgn
View: FENCE_VIEW1
By: jdouglas

34" x 22"

NOTE: SEE SUPERELEVATION TABLES FOR TRANSITION STATIONING AND RATES.

FOR LEGEND. SEE SHEET 17

(A) SEE UNDERDRAIN SUB-SUMMARY SHEETS FOR DEPTH AND QUANTITIES.

SM - FOR SEEDING AND MULCHING PAY ITEM AND QUANTITIES, REFER TO THE LANDSCAPE PLANTING PLANS.

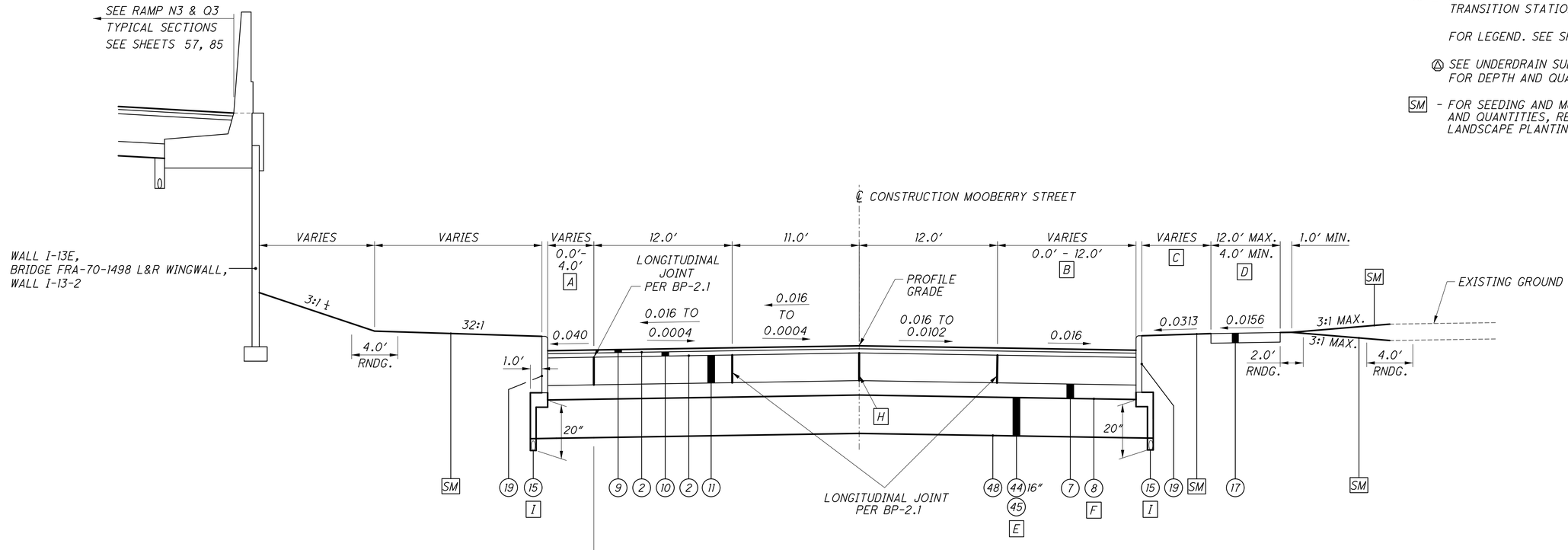

STA. 888+77.42 TO STA. 896+51.77 = 774.35 LIN. FT.
STA. 900+88.87 TO STA. 903+95.84 = 306.97 LIN. FT.

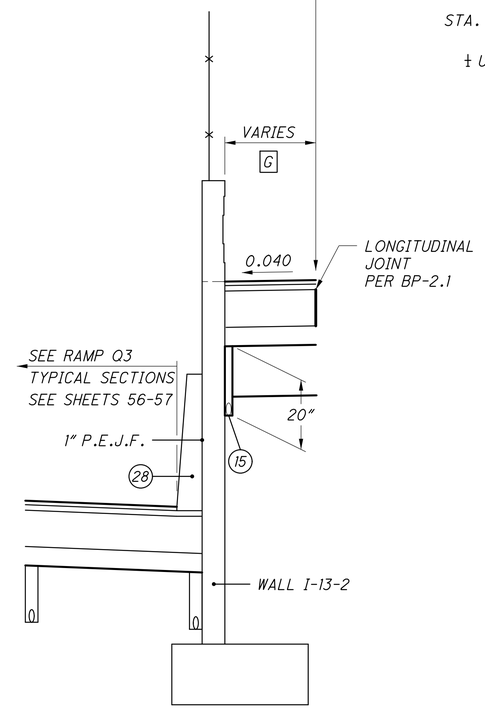

STA. 896+51.77 TO STA. 900+88.87 = 437.10 LIN. FT.

NORMAL SECTION - MOOBERRY STREET

SECTION APPLIES:

STA. 888+77.42 TO STA. 904+10.00 = 1532.58 LIN. FT.

‡ UNLESS OTHERWISE SHOWN IN CROSS SECTIONS

A STA. 888+77.42 TO STA. 895+64.12 = 0.0'
STA. 895+64.12 TO STA. 896+51.77 = 0.0' - 5.61'
STA. 900+88.87 TO STA. 901+85.83 = 5.17' - 0.0'
STA. 901+85.83 TO STA. 904+10.00 = 0.0'

B STA. 888+77.42 TO STA. 893+00.00 = 0.0'
STA. 893+00.00 TO STA. 893+60.00 = 0.0' - 12.0'
STA. 893+60.00 TO STA. 894+62.60 = 12.0'
STA. 894+62.60 TO STA. 904+10.00 = 0.0'

C STA. 888+77.42 TO STA. 894+25.21 = 6.0'
STA. 894+25.21 TO STA. 901+22.79 = 0.0'
STA. 901+22.79 TO STA. 901+51.46 = 2.0' - 4.0'
STA. 901+51.46 TO STA. 901+85.83 = 4.0' - 5.0'
STA. 901+85.83 TO STA. 904+10.00 = 5.0'

D STA. 888+77.42 TO STA. 894+25.21 = 6.0'
STA. 894+25.21 TO STA. 894+35.10 = 12.0'
STA. 894+83.22 TO STA. 895+01.44 = 6.0'
STA. 895+31.58 TO STA. 897+53.17 = 7.0'
STA. 897+53.17 TO STA. 897+54.17 = 7.0' - 6.0'
STA. 897+54.17 TO STA. 899+56.77 = 6.0'
STA. 899+56.77 TO STA. 900+20.67 = 6.0' - 4.0'
STA. 900+92.87 TO STA. 901+03.04 = 6.0'
STA. 901+03.04 TO STA. 901+22.79 = 6.0' - 8.0'
STA. 901+22.79 TO STA. 904+10.00 = 6.0'

E STA. 899+50.00 TO STA. 904+10.00

F STA. 888+77.42 TO STA. 899+50.00

G STA. 896+51.77 TO STA. 897+84.46 = 5.61' - 4.42'
STA. 897+84.46 TO STA. 900+54.42 = 4.42'
STA. 900+54.42 TO STA. 900+88.87 = 4.42' - 5.17'

H LONGITUDINAL JOINT PER BP-2.1
FROM STA. 888+77.42 TO STA. 892+85.00

CONSTRUCTION JOINT PER BP-2.2
FROM STA. 892+85.00 TO STA. 904+10.00

I UNDERDRAIN TO BE LOCATED IN ALTERNATE LOCATION PER COC STD DETAIL 2000:
STA. 899+50.00 TO STA. 904+10.00

CROSS REFERENCES	
SHT NO	DESCRIPTION
631-646	PLAN
786-793	INTERSECTION DETAILS

CALCULATED DWH
CHECKED TAZ

TYPICAL SECTIONS - MOOBERRY ST.
STA. 888+77.42 TO STA. 904+10.00

FRA-70-14.54

ms consultants, inc.

PLOT.CEL

ms consultants, inc.
msconsultants.com

Ohio DOT Workspace
70\71 East Interchange 2E
www.msconsultants.com

1"
0.5"
0

Batchplot Spec: \\msconsultants.com\files\Production\03\60\06634.2E\standards\plotdrv\batchplt.SPC
Pen Table: \\msconsultants.com\files\Standards\astm\ohdot\V8i\ms\plotting\pen\V8i_ms_std.tbl
Plot Driver: \\msconsultants.com\files\Standards\astm\ohdot\V8i\ms\plotting\PDF.pltcfg
PLOT: ohdotV8i
PLOT: 60-06634_2E_Columbus

34" x 22"

View SHEET
By: dhall
Model: Sheet
Printed: 1/11/2019 @ 9:28:11 AM
File: \\msconsultants.com\files\Production\03\60\06634.2E\roadway\sheets\1052260V1078.dgn

NOTE: SEE SUPERELEVATION TABLES FOR TRANSITION STATIONING AND RATES.

FOR LEGEND. SEE SHEET 17

Ⓐ SEE UNDERDRAIN SUB-SUMMARY SHEETS FOR DEPTH AND QUANTITIES.

[SM] - FOR SEEDING AND MULCHING PAY ITEM AND QUANTITIES, REFER TO THE LANDSCAPE PLANTING PLANS.

CROSS REFERENCES	
SHT NO	DESCRIPTION
599, 631, 726	PLAN
1113	BRICK PAVER CROSSWALK
788	INTERSECTION DETAIL

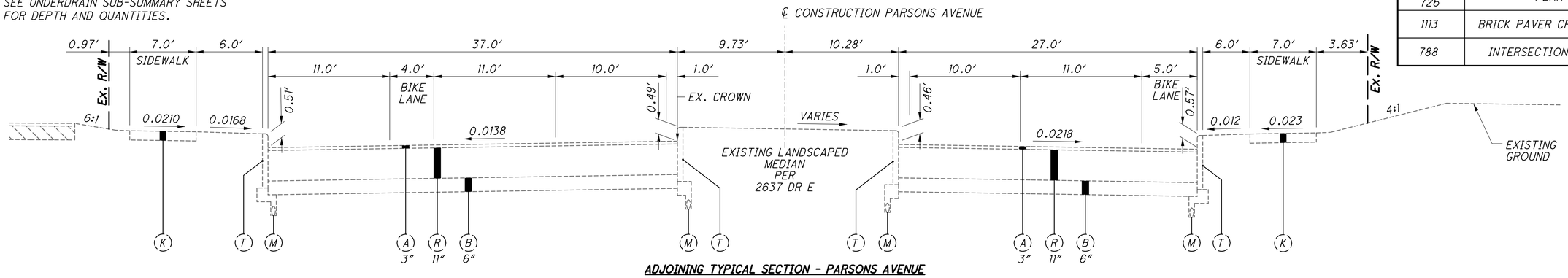

ADJOINING TYPICAL SECTION - PARSONS AVENUE

SECTION APPLIES:

STA. 179+67.62

FOR PARSONS/MOOBERRY & RAMP N1 INTERSECTION , PAVEMENT BUILDUP, FROM STA. 182+78.13 TO STA. 183+50.45, SHALL FOLLOW THE INTERSECTION INLAY DETAIL ON SHEET 17.

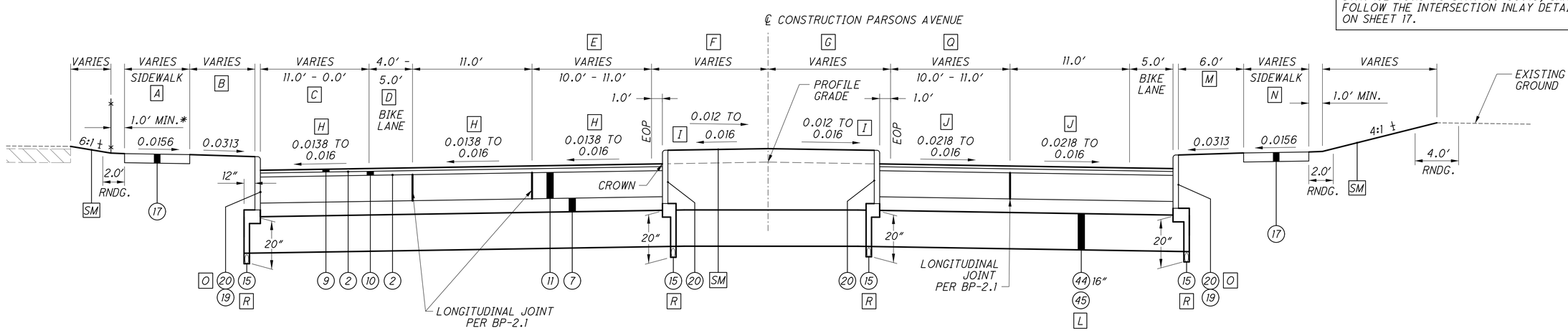

NORMAL SECTION - PARSONS AVENUE

SECTION APPLIES:

STA. 179+67.62 TO STA. 182+56.60 = 288.98 LIN. FT.
STA. 183+72.13 TO STA. 184+99.34 = 127.21 LIN. FT.

‡ UNLESS OTHERWISE SHOWN IN CROSS SECTIONS

[SM] FOR SEEDING AND MULCHING PAY ITEMS AND QUANTITIES, REFER TO THE LANDSCAPE PLANTING PLANS

[A] STA. 179+67.62 TO STA. 182+39.43 = 7.0′
STA. 183+58.63 TO STA. 184+68.51 = 10.0′
STA. 184+68.51 TO STA. 184+99.34 = 10.0′ - 10.70′

[B] STA. 179+67.62 TO STA. 181+90.29 = 6.0′
STA. 181+90.29 TO STA. 182+02.47 = 6.0′ - 4.0′
STA. 182+02.47 TO STA. 182+40.06 = 4.0′
STA. 183+72.13 TO STA. 184+99.34 = 0.0′

[C] STA. 179+67.62 TO STA. 181+10.00 = 11.0′
STA. 181+10.00 TO STA. 181+70.00 = 11.0′ - 0.0′
STA. 181+70.00 TO STA. 181+90.33 = 0.0′
STA. 181+90.33 TO STA. 182+47.15 = 0.0′ - 9.70′
STA. 183+72.13 TO STA. 184+99.34 = 0.0′

[D] STA. 179+67.62 TO STA. 180+90.03 = 4.0′
STA. 180+90.03 TO STA. 181+70.00 = 4.0′ - 5.0′
STA. 181+70.00 TO STA. 182+48.31 = 5.0′
STA. 183+72.13 TO STA. 184+99.34 = 5.0′

[E] STA. 179+67.62 TO STA. 180+00.00 = 10.0′ - 11.0′
STA. 180+00.00 TO STA. 182+56.60 = 11.0′
STA. 183+72.13 TO STA. 184+99.34 = 11.0′

[F] STA. 179+67.62 TO STA. 180+00.00 = 10.73′ - 9.73′
STA. 180+00.00 TO STA. 182+51.17 = 9.73′

END MEDIAN AT STA. 182+51.17

STA. 182+51.17 TO STA. 182+56.60 = 9.73′ - 9.86′
STA. 183+72.13 TO STA. 183+78.71 = 10.94′ - 11.0′
STA. 183+78.71 TO STA. 184+99.34 = 11.0′

[G] STA. 179+67.62 TO STA. 180+00.00 = 11.28′ - 10.28′
STA. 180+00.00 TO STA. 182+51.17 = 10.28′

END MEDIAN AT STA. 182+51.17

STA. 182+51.17 TO STA. 182+56.60 = 10.28′ - 10.31′
STA. 183+72.13 TO STA. 183+78.79 = 10.98′ - 11.0′
STA. 183+78.79 TO STA. 184+75.42 = 11.0′
STA. 184+75.42 TO STA. 184+99.34 = 6.68′

[H] STA. 179+67.62 TO STA. 180+05.53 = 0.0138 TO 0.016
STA. 180+05.53 TO STA. 182+56.60 = 0.016
STA. 183+71.10 TO STA. 184+99.34 = 0.016

[I] STA. 179+67.62 TO STA. 180+00.00
= +0.012 TO -0.016 LT. OF ℄
= -0.012 TO -0.016 RT. OF ℄

STA. 180+00.00 TO STA. 182+51.17
= -0.016 LT. OF ℄
= -0.016 RT. OF ℄

STA. 182+51.17 TO STA. 184+99.34
= -0.016 LT.& RT. ℄ (LANE CROSS-SLOPE)

[J] STA. 179+67.62 TO STA. 180+00.00 = 0.0218 TO 0.016
STA. 180+00.00 TO STA. 182+56.60 = 0.016
STA. 183+71.10 TO STA. 184+99.34 = 0.016

[L] STA. 179+67.62 TO STA. 182+56.60
STA. 183+72.13 TO STA. 184+99.34

[M] STA. 179+67.62 TO STA. 182+56.60 = 6.0′
STA. 183+72.13 TO STA. 184+99.34 = 0.0′

[N] STA. 179+67.62 TO STA. 182+56.60 = 7.0′
STA. 183+96.87 TO STA. 184+68.51 = 19.75′
STA. 184+68.51 TO STA. 184+99.34 = 19.75′ - 20.06″

[O] GRANITE CURB STA. 179+67.62 TO END OF INTERSECTION RADIUS WITH MOOBERRY ST. AND RAMP N1.

[Q] STA. 179+67.62 TO STA. 180+00.00 = 10.0′ - 11.0′
STA. 180+00.00 TO STA. 182+56.60 = 11.0′
STA. 183+72.13 TO STA. 184+99.34 = 11.0′

[R] UNDERDRAIN TO BE LOCATED IN ALTERNATE LOCATION PER COC STD DETAIL 2000

CALCULATED DWH
CHECKED TAZ

TYPICAL SECTIONS - PARSONS AVENUE
STA. 179+67.62 TO STA. 184+99.34

FRA-70-14.54

ms consultants, inc.

PLOT.CEL

ms consultants, inc.
msconsultants.com

NOTE: SEE SUPERELEVATION TABLES FOR TRANSITION STATIONING AND RATES.

FOR LEGEND. SEE SHEET 17

△ SEE UNDERDRAIN SUB-SUMMARY SHEETS FOR DEPTH AND QUANTITIES.

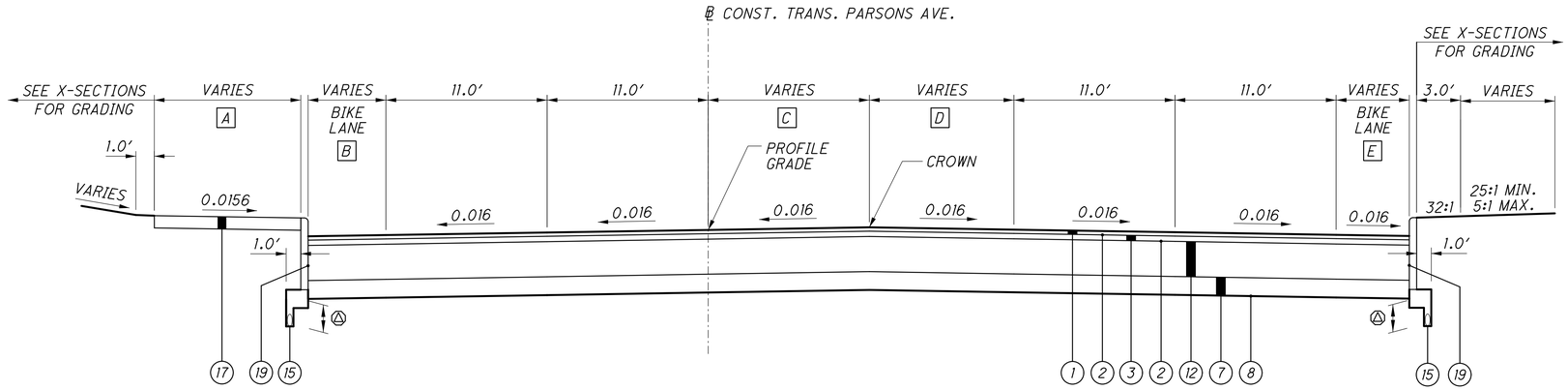

NORMAL SECTION - TRANS. PARSONS AVENUE

SECTION APPLIES:

STA. 85+00.00 TO STA. 86+90.27 = 190.27 LIN. FT.

A STA. 85+00.00 TO STA. 85+11.00 = 10.70′ - 11.46′
STA. 85+11.00 TO STA. 86+90.27 = 5.0′

B STA. 85+00.00 TO STA. 85+78.78 = 5.32′ - 1.92′
STA. 85+78.78 TO STA. 86+90.27 = 1.92′

C STA. 85+00.00 TO STA. 85+83.90 = 11.0′
STA. 85+83.90 TO STA. 86+90.27 = 11.0′ - 0.0′

D STA. 85+00.00 TO STA. 85+83.90 = 9.83′ - 0.0′
STA. 85+83.90 TO STA. 86+90.27 = 0.0′

E STA. 85+00.00 TO STA. 85+53.64 = 5.0′
STA. 85+53.64 TO STA. 86+22.75 = 5.0′ - 1.78′
STA. 86+22.75 TO STA. 86+90.27 = 1.78′

CROSS REFERENCES	
SHT NO	DESCRIPTION
599, 631, 726	PLAN

CALCULATED DWH
CHECKED TAZ

TRANSITIONAL PAVEMENT TYPICAL SECTIONS PARSONS AVE. STA. 85+00.00 TO STA. 86+90.27

FRA-70-14.54

66
2317

Batchplot Spec: \\msconsultants.com\files\production\03\60\06634_2E\standards\plotdrv\batchplt.spc
Pen Table: N:\03\60\06634_2E\standards\tables\V8i_ms_std_06634_20.tbl
Plot Driver: \\msconsultants.com\files\Standards\ustn\ohdot\v8i\ms\plotting\PDF.pltdrv
Model: Sheet
Printed: 6/19/2018 @ 7:57:26 AM
File: N:\03\60\06634_2E\roadway\sheets\1053220101.dgn
View: SHEET
By: jdoughas
34" x 22"
Ohio DOT Workspace
70\71 East Interchange 2E
PCF: ohdot\V8i
PCF: 60-06634_2E_Columbus
www.msconsultants.com

PLOT.CEL

ms consultants, inc.
msconsultants.com

www.msconsultants.com

Ohio DOT Workspace
70\71 East Interchange 2E

1" 0 0.5"

34" x 22"

Batchplot Spec: \\msconsultants.com\files\Production\03\60\06634_2E\standards\plotdrv\batchplt.spc
Pen Table: \\msconsultants.com\files\Standards\ustn\ohdot\V8i\ms\plotting\pen\V8i_ms_std.tbl PCF: ohdotV8i
Plot Driver: \\msconsultants.com\files\Standards\ustn\ohdot\v8i\ms\plotting\PDF.pltcfg PCF: 60-06634_2E_Columbus

Model: Sheet View: FENCE_VIEW1
Printed: 8/27/2018 @ 3:11:50 PM By: jdouglas
File: \\msconsultants.com\files\Production\03\60\06634_2E\roadway\sheets\105322GY109.dgn

NOTE: SEE SUPERELEVATION TABLES FOR TRANSITION STATIONING AND RATES.

FOR LEGEND. SEE SHEET 17

Ⓐ SEE UNDERDRAIN SUB-SUMMARY SHEETS FOR DEPTH AND QUANTITIES.

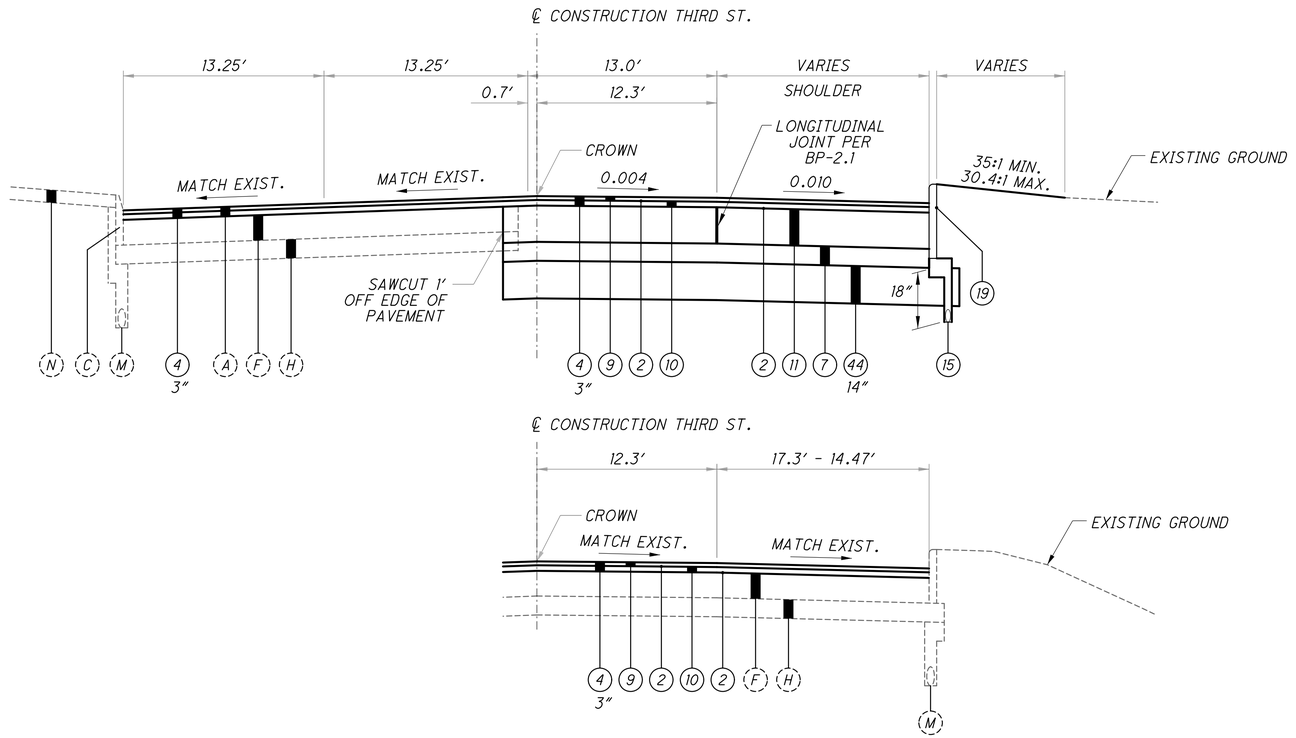

STA. 150+77.52 TO STA. 151+03.57 = 26.05 LIN. FT.

NORMAL SECTION - THIRD ST.

SECTION APPLIES:

STA. 149+89.09 TO STA. 151+03.57 = 114.48 LIN. FT.

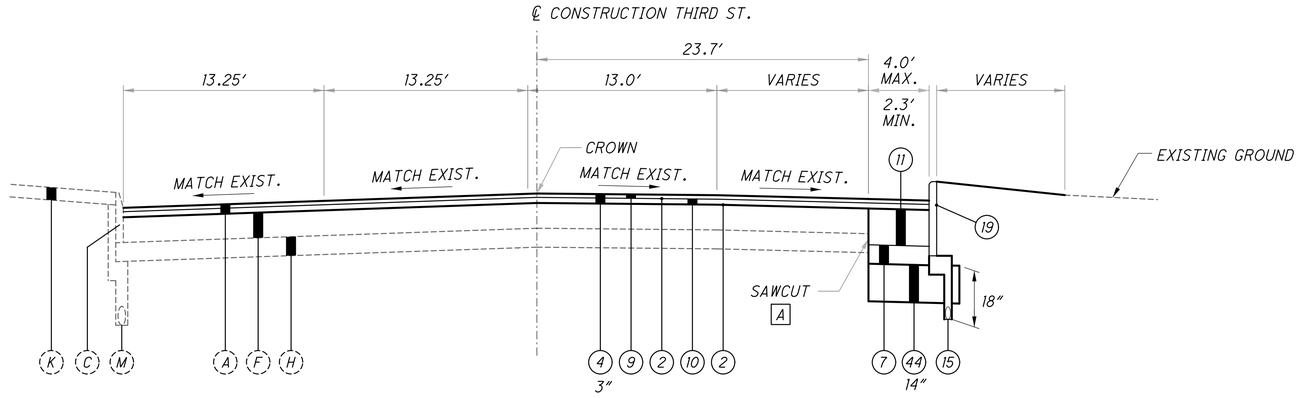

A BEGIN SAWCUT AND FULL DEPTH PAVEMENT AT 152+47.59, 23.7′ RT.

NORMAL SECTION - THIRD ST.

SECTION APPLIES:

STA. 152+25.68 TO STA. 153+87.57 = 161.89 LIN. FT.

CALCULATED DWH
CHECKED HRB

TYPICAL SECTIONS - THIRD ST.
STA. 149+89.09 TO STA. 153+87.57

FRA-70-14.54

67
2317

NOTE: SEE SUPERELEVATION TABLES FOR TRANSITION STATIONING AND RATES.

FOR LEGEND. SEE SHEET 17

△ SEE UNDERDRAIN SUB-SUMMARY SHEETS FOR DEPTH AND QUANTITIES.

SM - FOR SEEDING AND MULCHING PAY ITEM AND QUANTITIES, REFER TO THE LANDSCAPE PLANTING PLANS.

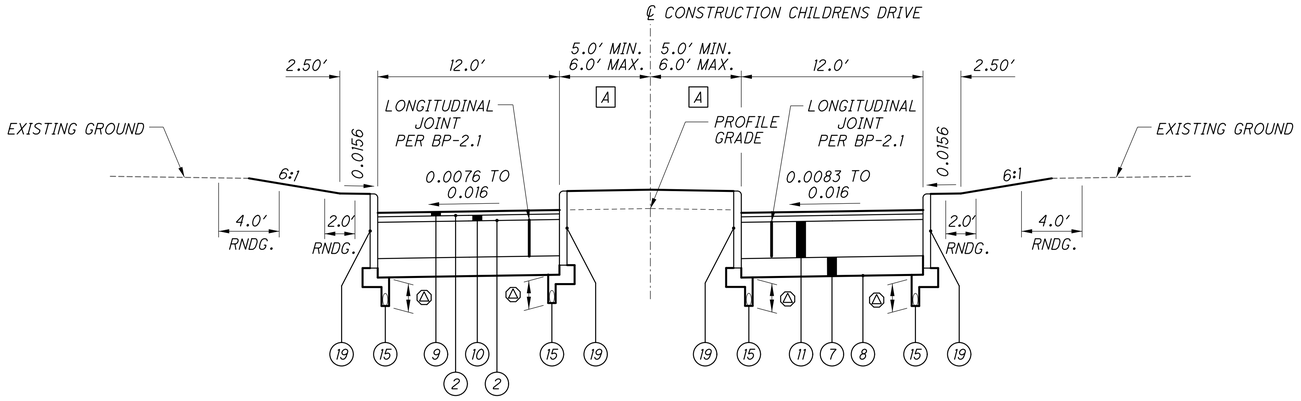

NORMAL SECTION - CHILDRENS DRIVE

SECTION APPLIES:

STA. 590+00.00 TO STA. 591+51.23 = 151.23 LIN. FT.

A END MEDIAN AT STA. 590+05.00 RESUME FULL DEPTH PAVEMENT
STA. 590+00.00 TO STA. 590+26.59 = 5.0'
STA. 590+26.59 TO STA. 591+01.28 = 5.0' - 6.0'
STA. 591+01.28 TO STA. 591+57.23 = 6.0'

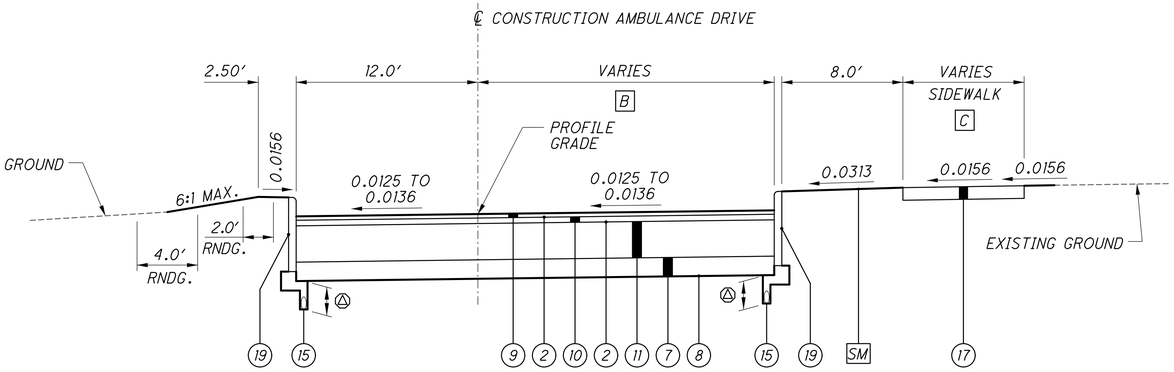

NORMAL SECTION - AMBULANCE DRIVE

SECTION APPLIES:

STA. 691+05.00 TO STA. 691+69.16 = 64.16 LIN. FT.

B STA. 691+05.00 TO STA. 691+14.38 = 19.56' - 12.0'
STA. 691+14.38 TO STA. 691+69.16 = 12.0'

C BEGIN SIDEWALK AT STA. 691+39.10
STA. 691+39.00 TO STA. 691+45.10 = 4.79' - 6.0'
STA. 691+45.10 TO STA. 691+69.16 = 6.0'

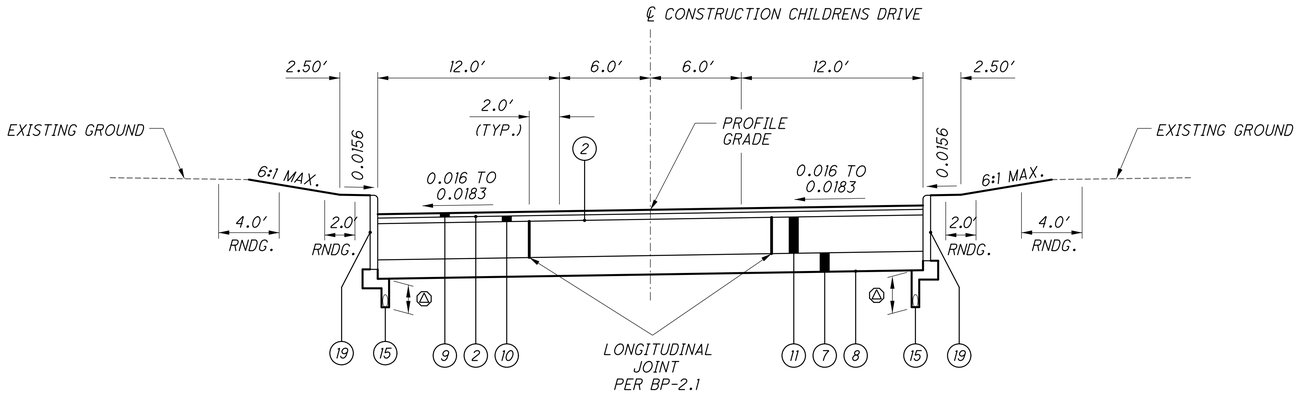

SUPERELEVATED SECTION - CHILDRENS DRIVE

SECTION APPLIES:

STA. 591+51.23 TO STA. 591+59.31 = 8.08 LIN. FT.

CROSS REFERENCES	
SHT NO	DESCRIPTION
631, 635	AMBULANCE AND CHILDRENS DRIVE PLAN SHEETS

CALCULATED DWH
CHECKED TAZ

TYPICAL SECTIONS - AMBULANCE & CHILDRENS DRIVE.
STA. 590+00.00 TO STA. 591+59.31

FRA-70-14.54

PLOT.CEL
ms consultants, inc.
msconsultants.com
Ohio DOT Workspace
70\71 East Interchange 2E
www.msconsultants.com
Batchplot Spec: \\msconsultants.com\files\production\03\60\06634_2E\standards\plotdrv\batchplt.spc
Pen Table: \\msconsultants.com\files\Standards\ustn\ohdot\V8i\ms\plotting\pen\V8i_ms_std.tbl
Plot Driver: \\msconsultants.com\files\Standards\ustn\ohdot\v8i\ms\plotting\PDF.pltcfg
34" x 22"
Model: Sheet View: FENCE_VIEW1
Printed: 6/19/2018 @ 7:57:30 AM By: jdouglas
File: N:\03\60\06634_2E\roadway\sheets\105322GY085.dgn
ms consultants, inc.

PLOT.CEL

ms consultants, inc.
msconsultants.com

www.msconsultants.com

Ohio DOT Workspace
70\71 East Interchange 2E

1" 0.5" 0

Batchplot Spec: \\msconsultants.com\files\production\03\60\06634_2E\standards\plotdrv\batchplt.SPC ohdot\V8i
Pen Table: \\msconsultants.com\files\Standards\astm\ohdot\V8i\ms\plotting\pen\V8i_ms_std.tbl PCF: 60-06634_2E_Columbus
Plot Driver: \\msconsultants.com\files\Standards\astm\ohdot\v8i\ms\plotting\PDF.pltcfg

Model: Sheet View: SHEET
Printed: 1/17/2019 @ 1:25:10 PM By: dhall
File: \\msconsultants.com\files\Production\03\60\06634_2E\roadway\sheets\1053220N001.dgn

34" x 22"

UTILITIES

THE LOCATION OF THE UNDERGROUND UTILITIES SHOWN ON THE PLANS ARE AS OBTAINED FROM THE OWNERS AS REQUIRED BY SECTION 153.64 O.R.C.

LISTED BELOW ARE THE UTILITIES LOCATED WITHIN THE PROJECT CONSTRUCTION LIMITS TOGETHER WITH THEIR RESPECTIVE OWNERS:

ELECTRIC

AMERICAN ELECTRIC POWER - TRANSMISSION
ATTN: MICHAEL CARR
700 MORRISON ROAD
GAHANNA, OHIO 43230
614-552-1893
TL_PublicProjects@aep.com

AMERICAN ELECTRIC POWER **
(CITY PROJECTS/DISTRIBUTION)
ENGINEERING LIAISON COORDINATOR
ROD SLONEKER
700 MORRISON ROAD
GAHANNA, OHIO 43230
OFFICE: 614-883-6817
CELL: 614-301-4977
FAX: 614-883-6868
AEP SOLUTION CENTER: 800-277-2177
risloneker@aep.com

CITY OF COLUMBUS
DIVISION OF POWER
3500 INDIANOLA AVENUE
COLUMBUS, OHIO 43214
614-645-5814 FAX
614-645-7627 (24 HR)

** REFER TO POWER SERVICE DETAILS ON SHEETS 1286-1294 FOR FURTHER INFORMATION.

GAS

COLUMBIA GAS OF OHIO
ROB CALDWELL
LEADER FIELD ENGINEERING
3550 JOHNNY APPLESEED CT.
COLUMBUS, OHIO 43231
OFFICE: 614-818-2104
CELL: 614-370-1906
CUSTOMER SERVICE: 1-800-344-4077
DAMAGE PREVENTION: 1-866-632-6243
columbiagas columbuseng@nisource.com
ALSO COPY ROB CALDWELL AT
rcaldwell@nisource.com

WATER

CITY OF COLUMBUS
DIVISION OF WATER
910 DUBLIN ROAD
COLUMBUS, OHIO 43215
614-645-7788

CABLE

TIME WARNER CABLE
ATTN: SAM LUTZ
3760 INTERCHANGE ROAD
COLUMBUS, OH 43204
614-348-2966
SAMUEL.LUTZ@CHARTER.COM

TIME WARNER CABLE (INSIGHT COMMUNICATIONS)
ATTN: MIKE BATH
3760 INTERCHANGE ROAD
COLUMBUS, OHIO 43204
OFFICE: 614-827-7974
CELL: 614-332-2337
WARREN.BATH@TWCABLE.COM

WOW!
STEVEN CALLAHAN
3675 CORPORATE DRIVE
COLUMBUS, OHIO 43231
OFFICE: 614-948-4636
CELL: 614-749-2225
steven.callahan@wowinc.com

SEWER

CITY OF COLUMBUS
DIVISION OF SEWERAGE AND DRAINAGE
SEWER MAINTENANCE OPERATION CENTER
1250 FAIRWOOD AVENUE
COLUMBUS, OHIO 43206
614-645-7102

TELEPHONE/TELECOMMUNICATIONS

XO COMMUNICATIONS
ATTN: DALE FERGUSON
6900 SOUTH POINTE PARKWAY
BRECKSVILLE, OHIO 44141
OFFICE: 216-619-3492
CELL: 216-820-3868
DALE.FERGUSON@XO.COM

LEVEL 3 COMMUNICATIONS FKA TW TELECOM
250 W. OLD WILSON BRIDGE, SUITE 130
WORTHINGTON, OH 43085
PLEASE SEND PLANS ELECTRONICALLY TO
Relo@Level3.com , and
Level3.NetworkRelocations@Level3.com

AT&T
ATTN: GARY VAN ALMSICK
111 NORTH FOURTH STREET, 8TH FLOOR
COLUMBUS, OHIO 43215
614-223-7276/614-223-5579
GV2758@att.com
AT&T REPAIR SERVICE:
888-611-4466
DAMAGE PREVENTION:
937-296-3929

WINDSTREAM OHIO
ATTN: MAURICE D. JONES
OFFICE 740-349-8866
MOBILE 740-438-1731
maurice.jones@windstream.com

CITYNET
ATTN: ERIC L. ALEXANDER
779 BROOKSEDGE BOULEVARD
WESTERVILLE, OHIO 43081
614-364-7825
614-989-9655 CELL
ERIC.ALEXANDER@CITYNET.NET

CITY OF COLUMBUS
DEPARTMENT OF TECHNOLOGY
13455 McKINLEY AVE., BUILDING C
COLUMBUS, OH 43222
CONTRACTOR LINE: 614-645-7756

CITY OF COLUMBUS
DEPARTMENT OF PUBLIC SERVICE
TRAFFIC MANAGEMENT
1820 17th AVE.
COLUMBUS, OHIO 43219
614-645-7393

CITY OF COLUMBUS
DIVISION OF SUPPORT SERVICES-COMMUNICATIONS
4211 GROVES ROAD
COLUMBUS, OH 43232-4104
PHONE: 614-724-7047
RADIO ROOM: 614-724-4006

ODOT TRAFFIC
400 E. WILLIAMS ST.
DELAWARE, OH 43015
740-833-8024

SURVEY PARAMETERS

USE THE FOLLOWING PROJECT CONTROL, VERTICAL POSITIONING, AND HORIZONTAL POSITIONING PARAMETERS FOR ALL SURVEYING:

VERTICAL POSITIONING

ORTHOMETRIC HEIGHT DATUM: NAVD 88
GEOID: GEOID 99

HORIZONTAL POSITIONING

HORIZONTAL DATUM NAD 83 (1986)
COORDINATE SYSTEM: OHIO STATE PLAN - SOUTH ZONE
COMBINED SCALE FACTOR 1.000043907
ORIGIN OF COORDINATE SYSTEM:
FRANKLIN COUNTY MONUMENT "FRANK 143"
NORTHING = 711726.0754
EASTING = 1840542.0310

USE THE POSITIONING METHODS AND MONUMENTS TYPE USED IN THE ORIGINAL SURVEY TO RESTORE ALL MONUMENTS RELATED TO PRIMARY PROJECT CONTROL THAT ARE DAMAGED OR DESTROYED BY CONSTRUCTION ACTIVITIES. RESTORE THE DAMAGED OR DESTROYED MONUMENTS IN ACCORDANCE WITH SUPPLEMENTAL SPECIFICATION 823.

UNITS ARE IN U.S. SURVEY FEET. USE THE FOLLOWING CONVERSION FACTOR: 1 METER = 3.280833333 U.S. SURVEY FEET.

CITY OF COLUMBUS PERMITS

WHEN EXCAVATING WITHIN COLUMBUS PUBLIC RIGHT OF WAY LIMITS, THE CONTRACTOR SHALL OBTAIN AN EXCAVATION PERMIT FROM THE CITY OF COLUMBUS, DEPARTMENT OF PUBLIC SERVICE - PERMIT OFFICE BETWEEN THE HOURS OF 7:30 AM AND 4:00 PM MONDAY THROUGH FRIDAY. PERMIT MAY INCLUDE THE VALUE OF PARKING METERS RENDERED UNAVAILABLE TO THE PUBLIC AS A DIRECT RESULT OF THE WORK. SEE NOTE 20 ON SHEET 100 FOR ESTIMATING PARKING METER FEES
PHONE: (614) 645-7497
FAX: (614) 645-1876
EMAIL: COLSPERMITS@COLUMBUS.GOV

SERVICE TAP LOCATIONS

EXISTING WATER LINE & SERVICE TAPS HAVE BEEN LOCATED IN THE PLANS WITH THE CITY OF COLUMBUS SERVICE TAP CARDS. THE SERVICE TAPS HAVE NOT BEEN LOCATED TO A SUE LEVEL "B".

FLEXIBLE PIPE WITHIN CITY OF COLUMBUS RIGHT-OF-WAYS

ANY FLEXIBLE SANITARY OR STORM PIPES USED WITHIN THE CITY OF COLUMBUS'S RIGHT-OF-WAYS, SHALL BE FROM THE CITY OF COLUMBUS PRE-APPROVED SUPPLIER LIST.

CONTACT JEREMY CAWLEY WITH THE CITY'S DOSD FOR THE PRE-APPROVED SUPPLIER LIST @ 614-645-6795.

ITEM 611 - SIZE" CONDUIT, TYPE, AS PER PLAN

ALL PROPOSED STORM SEWER CONDUITS AS SHOWN IN THIS CONSTRUCTION DOCUMENT THAT ARE WITHIN THE CITY STREET'S RIGHT OF WAY SHALL BE FURNISHED AND INSTALLED PER ITEM 603 AND ITEM 901 FROM THE 2012 CITY OF COLUMBUS SPECIFICATION FOR CONSTRUCTION INCLUDING ALL REVISIONS AND CHANGES. CONDUIT EVALUATION WILL BE PERFORMED POST CONSTRUCTION PER CITY OF COLUMBUS SPECIFICATIONS.

THE CONDUIT MATERIAL TYPES CALLED OUT IN THE QUANTITY DESCRIPTION WILL CROSS REFERENCE OVER TO THE CITY'S ITEM 603 SPECIFICATIONS, EXCEPT FOR TYPE B AND TYPE C CONDUITS. WHEN TYPE B OR TYPE C CONDUIT MATERIAL IS CALLED OUT, USE THE CITY'S ITEM 901 SPECIFICATION FOR PIPE MATERIAL, BEDDING TYPE BASED ON PIPE MATERIAL, AND INSTALLATION.

REMOVAL MISC.: RUNNING TRACK REMOVED

THE EXISTING HIGH SCHOOL TRACK LOCATED SOUTH OF I-70 AND EAST OF GRANT AVENUE, AND FOR THE PART OF IT THAT FALLS INTO THE CURRENT CONSTRUCTION LIMITS, SHALL BE REMOVED AND PROPERLY DISPOSED OF PER ITEM 202.02 OF ODOT'S CONSTRUCTION AND MATERIAL SPECIFICATIONS.

ALL WORK ASSOCIATED WITH THE REMOVAL AND DISPOSAL OF THE RUNNING TRACK WILL BE PAID FOR PER SQUARE YARD, AS ITEM 202 - REMOVAL MISC.: RUNNING TRACK REMOVED.

ITEM 202 - DISCONNECT EXISTING CIRCUIT, AS PER PLAN

PRIOR TO REMOVING THE PRIVATELY OWNED LIGHT POLES AND FOUNDATIONS WITHIN THE NEW LA-R/W, THE CONTRACTOR SHALL CONTACT (NCH) NATIONWIDE CHILDREN'S HOSPITAL REPRESENTATIVE 48 HOURS BEFORE COMMENCING WORK. THE CIRCUITS TO THE LIGHTS SHALL BE TURNED "OFF" AS NECESSARY TO SAFELY WORK ON THE EFFECTED CIRCUITS. THE CONTRACTOR SHALL COORDINATE WITH NCH AS TO THE LOCATIONS TO DISCONNECT THE CIRCUITS.

NCH CONTACT REPRESENTATIVE IS:
OKEY ENELI, P.E.
PHONE: 614-355-1556
CELL: 614-581-5422
EMAIL: OKEY.ENELI@NATIONWIDECHILDRENS.ORG

ALL LABOR, MATERIALS, AND EQUIPMENT FOR DISCONNECTING THE CIRCUITS OF THE PARKING LOT LIGHTS SHALL BE INCLUDED IN THE CONTRACT BID PRICE FOR THE PERTINENT ITEM 202-DISCONNECT EXISTING CIRCUIT, AS PER PLAN.

FLOOD INSURANCE RATE MAP (FIRM)

PANEL: 39049C0328K
FLOOD ZONE: X
BASE FLOOD ELEVATION: 713
EFFECTIVE DATE: 06/17/2008

TEMPORARY CONCRETE BARRIER REMOVAL

THREE SECTIONS OF EXISTING TEMPORARY CONCRETE BARRIER ON THE NORTH SIDE OF FULTON STREET JUST WEST OF FOURTH STREET (ADJACENT TO FIRE STATION #2) BELONG TO THE CITY OF COLUMBUS. BASED ON THE CONTRACTOR'S SCHEDULE AS TO WHEN THESE BARRIERS NEED TO BE REMOVED, 1 WEEK IN ADVANCE CONTACT THE CITY OF COLUMBUS STREET MAINTENANCE MANAGER (CURRENTLY RODNEY SPARKS) AT (614) 645-6325 OR BY EMAIL AT RWSPARKS@COLUMBUS.GOV TO COORDINATE THE REMOVAL OF THESE BARRIERS.

CALCULATED | CHECKED

GENERAL NOTES

FRA-70-14.54

ms consultants, inc.

PLOT.CEL

ms consultants, inc.
msconsultants.com

www.msconsultants.com

Ohio DOT Workspace
70\71 East Interchange 2E

1"
0
0.5"

ODF: ohdot\V8i
PCF: 60-06634_2E_Columbus

Batchplot Spec: \\msconsultants.com\files\production\03\60\06634_2E\standards\plotdrv\batchplt.spc
Pen Table: N:\03\60\06634_2E\standards\tables\V8i_ms_std_Noclouds.tbl
Plot Driver: \\msconsultants.com\files\Standards\ustn\ohdot\v8i\ms\plotting\PDF.pltdrg

34" x 22"

Model: Sheet
Printed: 2/12/2019 @ 2:20:35 PM View: FENCE_VIEW1
File: N:\03\60\06634_2E\roadway\sheets\105322GN002.dgn By: hbrendlinger

PETROLEUM CONTAMINATED MATERIALS

ENVIRONMENTAL STUDIES HAVE SHOWN THAT THERE IS A POTENTIAL OF ENCOUNTERING PETROLEUM CONTAMINATED MATERIALS DURING EXCAVATIONS FOR CONSTRUCTION ACTIVITIES ON CHILDREN'S HOSPITAL PROPERTY @ 525 KENNEDY DRIVE AND 479 PARSONS AVENUE, TAX PARCEL 010-074752. IN THE EVENT PETROLEUM-CONTAMINATED MATERIALS ARE ENCOUNTERED, THE CONTRACTOR SHALL MANAGE THIS MATERIAL ACCORDING TO THE FOLLOWING NOTES. THE ESTIMATED QUANTITY HAS BEEN INCLUDED IN THE GENERAL SUMMARY FOR THIS WORK. ALL EXCAVATIONS WITHIN THE AFOREMENTIONED LIMITS SHALL BE PAID FOR UNDER THE ORIGINAL PLAN BID ITEMS.

ALL POTENTIAL PETROLEUM CONTAMINATED SOIL, WITHIN THE AFOREMENTIONED LIMITS, EXCAVATED BY THE CONTRACTOR AT THIS LOCATION MAY BE STOCKPILED IN AN AREA PROVIDED BY THE CONTRACTOR AND APPROVED BY THE ENGINEER. THE ENGINEER MAY PERMIT TEMPORARY STORAGE OF THE EXCAVATED MATERIAL IN A LINED AND COVERED ROLLOFF BOX. THE ENGINEER MAY PERMIT TEMPORARY STORAGE OF THE EXCAVATED MATERIAL ON AN IMPERMEABLE MEMBRANE. THE MEMBRANE SHALL BE SURROUNDED BY BALES OF STRAW TO PREVENT THE SUSPECTED SOILS FROM COMING IN CONTACT WITH THE ORIGINAL SOILS. AN IMPERMEABLE MEMBRANE SHALL BE PLACED OVER THE STOCKPILE TO PREVENT CONTACT WITH PRECIPITATION AND/OR SURFACE RUNOFF. THE ENGINEER MAY PERMIT THE CONTRACTOR TO DIRECT LOAD THE EXCAVATED CONTAMINATED MATERIAL INTO TRUCKS.

IF EXCAVATIONS WITHIN THE AFOREMENTIONED LIMITS REQUIRE DEWATERING FOR CONSTRUCTION PURPOSES, THE CONTRACTOR SHALL DEWATER, CONTAINERIZE, TEST THE WATER AND DISPOSE OF BY METHODS APPROVED BY THE ENGINEER. THE CONTRACTOR SHALL OBTAIN ALL THE NECESSARY PERMITS AND/OR AUTHORIZATIONS NEEDED TO STORE, TRANSPORT AND DISPOSE OF THE WATER IN ACCORDANCE WITH APPLICABLE LOCAL, STATE OR FEDERAL REGULATIONS. WORK INVOLVED WITH THIS ITEM SPECIAL INCLUDES COMPLYING WITH THE HANDLING, STORAGE, AND DISPOSAL OF REGULATED AND NON-REGULATED WATER.

THE CONTRACTOR SHALL BE RESPONSIBLE FOR OBTAINING ALL NECESSARY PERMITS AND APPROVALS AND TO TRANSPORT THE MATERIAL TO A LICENSED AND PERMITTED SOLID WASTE DISPOSAL FACILITY. THE CONTRACTOR SHALL CONTACT THE FACILITY TO DETERMINE IF ANY ADDITIONAL TESTING IS REQUIRED FOR DISPOSAL. THE CONTRACTOR SHALL BE RESPONSIBLE FOR CONDUCTING AND ADDITIONAL SAMPLING AND ANALYSIS OF THIS MATERIAL. COPIES OF THE ANALYTICAL TEST RESULTS SHALL BE PROVIDED TO THE ENGINEER.

ALL TRANSPORT VEHICLES USED FOR THE MOVEMENT OF REGULATED MATERIALS SHALL MEET ALL APPLICABLE LOCAL, STATE, AND FEDERAL REQUIREMENTS. THE CONTRACTOR SHALL MAINTAIN RECORDS (SUCH AS MANIFESTS, LANDFILL TICKETS, DAILY LOGS, ETC.) TO DOCUMENT THE SOURCE, MOVEMENT, AND DESTINATION OF EACH TRUCKLOAD OF CONTAMINATED MATERIAL. ONE COPY OF EACH OF THESE RECORDS SHALL BE SUBMITTED TO THE ENGINEER.

THE CONTRACTOR SHALL FURNISH ALL THE LABOR, EQUIPMENT, AND MATERIALS NECESSARY TO PROPERLY HANDLE, STORE, TEST (FOR DISPOSAL), TRANSPORT, AND DISPOSE OF REGULATED MATERIALS, INCLUDING ANY REQUIRED PERMITS, APPROVALS, OR FEES WITHIN THE LIMITS IDENTIFIED ABOVE. PAYMENT FOR THIS WORK SHALL BE MADE AT THE CONTRACT PRICE BID PER TON OR PER GALLON. THE BASIS FOR CONVERSION FROM TONS TO CUBIC YARDS IS 1.5 TON/CUBIC YARD. THE FOLLOWING ESTIMATED QUANTITY HAS BEEN INCLUDED IN THE GENERAL SUMMARY FOR THE WORK NOTED ABOVE:

PETROLEUM CONTAMINATED MATERIALS (CONTINUED)

690E65016 - ITEM SPECIAL - WORK INVOLVING PETROLEUM CONTAMINATED SOIL 3,850 TONS

690E65022 - ITEM SPECIAL - WORK INVOLVING REGULATED WATER 1,000 GAL.

690E65024 - ITEM SPECIAL - WORK INVOLVING NON-REGULATED WATER 10,000 GAL.

DEWATERING/BYPASS PUMPING

SHOULD WATER BE ENCOUNTERED, THE CONTRACTOR SHALL FURNISH AND OPERATE SUITABLE PUMPING EQUIPMENT OF SUCH CAPACITY TO ADEQUATELY DEWATER THE TRENCH PER CMSC ITEM 901.06. THE TRENCH SHALL BE SUFFICIENTLY DEWATERED SO THAT THE PLACEMENT OF BEDDING AND LYING AND JOINING OF THE PIPE IS MADE ON FIRM, DRY GROUND.

THE CONTRACTOR IS RESPONSIBLE TO PROVIDE ALL DEWATERING OPERATIONS AS REQUIRED TO ACCOMPLISH THE PROPOSED CONSTRUCTION OPERATIONS. THE CONTRACTOR SHALL BE RESPONSIBLE FOR ALL SOIL AND GROUNDWATER TESTING FOR GROUNDWATER DISCHARGE CONSIDERATIONS. THE COST OF ALL DEWATERING WORK REQUIRED FOR THE CONSTRUCTION OF THE STORM SEWER OR WATERLINES SHALL BE INCLUDED IN THE UNIT BID PRICE FOR THE VARIOUS SEWER OR WATER ITEMS. NO SEPARATE PAYMENT FOR PUMPS WILL BE PROVIDED.

THE CONTRACTOR IS SOLELY RESPONSIBLE TO THE OHIO DEPARTMENT OF NATURAL RESOURCES (O.D.N.R.) FOR REGISTRY, MAINTENANCE, AND ABANDONMENT OF ANY WITHDRAWAL DEVICES USED IN THE CONSTRUCTION OF THIS PROJECT, IF REQUIRED.

THE CONTRACTOR SHALL BE REQUIRED TO COMPLETE AND FILE A WELL LOG AND A DRILLING REPORT FORM WITH O.D.N.R., DIVISION OF WATER, WITHIN 30 DAYS OF THE COMPLETION OF INSTALLATION OF ANY WELL, WELL POINT, PIT OR OTHER DEVICE USED FOR THE PURPOSE OF REMOVING GROUNDWATER FROM AN AQUIFER. THIS SHALL BE DONE IN ACCORDANCE WITH SECTIONS 1521.01 AND 1521.05 OF THE OHIO REVISED CODE AND ALL APPLICABLE REQUIREMENTS OF THE OHIO DEPARTMENT OF NATURAL RESOURCES. IN ADDITION, ANY SUCH FACILITY THAT HAS A CAPACITY TO WITHDRAW WATERS OF THE STATE IN AN AMOUNT GREATER THAN 100,000 GALLONS PER DAY FROM ALL SOURCES SHALL BE REGISTERED BY THE CONTRACTOR WITH THE CHIEF OF THE O.D.N.R., DIVISION OF WATER, WITHIN THREE MONTHS OF THE COMPLETION OF THE FACILITY IN ACCORDANCE WITH SECTION 1521.16 OF THE OHIO REVISED CODE. COPIES OF THE NECESSARY PAPERWORK CAN BE OBTAINED AT O.D.N.R., DIVISION OF WATER, FOUNTAIN SQUARE, COLUMBUS, OHIO, 43224-1387, PHONE: (614) 265-6717.

ANY DEVICE INSTALLED FOR THE PURPOSE OF LOWERING THE GROUNDWATER LEVEL TO FACILITATE CONSTRUCTION OF THIS PROJECT SHALL BE PROPERLY ABANDONED IN ACCORDANCE WITH THE PROVISIONS OF SECTION 3745-9-10 OF THE OHIO ADMINISTRATIVE CODE OR IN ACCORDANCE WITH THE PROVISION OF THIS PLAN OR AS DIRECTED BY THE SERVICE DIRECTOR OR THEIR REPRESENTATIVE.

BYPASS PUMPING IS REQUIRED WHEREVER THE FLOW IN ANY SEWER IS DISRUPTED BY CONSTRUCTION OF NEW SEWER SEGMENTS, MANHOLES, OR ASSOCIATED ACTIVITIES. BYPASS PUMPING MUST PROVIDE FOR POSSIBLE STORM FLOWS THAT MAY TYPICALLY BE EXPECTED DURING THE SEASONS THAT THE WORK IS IN PROGRESS. THE CONTRACTOR SHALL HAVE A CONTINGENCY PLAN TO PREVENT DAMAGE DURING HIGH FLOWS. THE CITY WILL NOT BE RESPONSIBLE FOR DAMAGES DUE TO HIGH FLOWS.

THE CONTRACTOR SHALL CONVEY ALL WATER TO A NATURAL DRAINAGE CHANNEL OR STORM SEWER WITHOUT DAMAGE TO PROPERTY BY UTILIZING PROPER EROSION AND SEDIMENT CONTROLS. DIRECT DISCHARGE OF SEDIMENT LADEN WATER TO THE CITY'S SEWER SYSTEM OR A RECEIVING STREAM IS A VIOLATION OF OHIO EPA AND CITY OF COLUMBUS REGULATIONS. THE CONTRACTOR WILL BE HELD LIABLE FOR ANY VIOLATION AND SUBSEQUENT FINES. THE CONTRACTOR SHALL BE RESPONSIBLE TO PLACE AND MAINTAIN THE NECESSARY SEDIMENT CONTROL MEASURES TO FILTER THE DEWATERING DISCHARGE. COST FOR THE ABOVE SHALL BE INCLUDED IN THE PRICE BID FOR THE PROJECT IMPROVEMENTS.

THE COST OF ANY DEWATERING OPERATIONS OR BYPASS PUMPING REQUIRED FOR THE CONSTRUCTION OF STORM SEWERS OR WATERLINES SHALL BE INCLUDED IN THE PRICE BID FOR THE VARIOUS SEWER OR WATER ITEMS.

SHEETING & BRACING

ANY SHEETING AND BRACING USED BY THE CONTRACTOR AND NOT OTHERWISE CALLED FOR IN THE PLANS SHALL BE FURNISHED, INSTALLED, AND MAINTAINED BY THE CONTRACTOR AT THE CONTRACTOR'S EXPENSE. NO SEPARATE PAYMENT SHALL BE MADE FOR SHEETING AND BRACING. AT ALL TIMES THE CONTRACTOR SHALL BE REQUIRED TO EXCAVATE IN A MANNER THAT IS SAFE TO ALL WORKERS AND THE GENERAL TRAVELING PUBLIC. ALL OSHA REQUIREMENTS SHALL BE UPHELD AND SOUND SAFETY PRACTICES SHALL BE EXERCISED AT ALL TIMES. REMOVAL OF SHEETING AND BRACING ITEMS UPON COMPLETION OF WORK WILL BE REQUIRED AS DIRECTED BY ODOT REPRESENTATIVES.

ODOT'S CONCRETE BARRIER INLETS

PER ODOT'S STANDARD CONSTRUCTION DRAWINGS FOR CONCRETE BARRIER INLET DETAILS, THE STATION AND OFFSET IS CALLED OUT TO THE CENTER OF THE GRATE. THE GRATE ELEVATION CALLED OUT IN THE STORM SEWER PROFILES AND CROSS SECTIONS ARE TO THE CENTER EDGE OF THE GRATE WHERE IT ABUTS TO THE FACE OF BARRIER.

ASPHALT CONCRETE INTERMEDIATE COURSE 19mm, TYPE A (448), AS PER PLAN

THE LEVELING COURSE TO BE USED UNDER THE STANDARD RESURFACING BUILDUP WITHIN THE INTERCHANGE CONSTRUCTION, SHALL BE ITEM 442, ASPHALT CONCRETE INTERMEDIATE COURSE, 19mm, TYPE A (448), AS PER PLAN. THE LEVELING COURSE WILL BE VARIABLE DEPTH WITH A MAXIMUM LIFT OF 4.5". SEE THE TYPICAL SECTION SHEETS FOR THE MILLING DEPTH/LEVELING COURSE DEPTH CHART.

ITEM SPECIAL - MISC.: GRASS PAVEMENT SYSTEM

SEE INSTALLATION DETAIL ON SHEET 1101

THE WORK CONSISTS OF EXCAVATION AND THE COMPACTION OF THE SUBGRADE AND FOR THE CONSTRUCTION OF FILTER FABRIC LINING, ENGINEERED BASE, GRASS PAVEMENT SYSTEM, TOPSOIL AND GRASS SEEDING.

THE DEPARTMENT WILL MEASURE GRASS PAVEMENT SYSTEM BY THE NUMBER OF SQUARE YARDS COMPLETED AND ACCEPTED IN PLACE.

THE FINISH MATERIALS SHALL CONFORM TO:
FILTER FABRIC, TYPE B, ITEM 712.09 OF ODOT CMS.

THE FOLLOWING SUPPLIERS CAN PROVIDE THE GRASS PAVEMENT SYSTEM, (OR APPROVED EQUAL):

1. *PRESTO GEOSYSTEMS "GEOBLOCK2"*
   670 N. PERKINS STREET
   APPLETON, WI 54914
   PHONE: 920-738-1707
   WWW.PRESTOGEO.COM

2. *ECO-TERR DISTR. INC. "STABLEGRID"*
   3020 ISSAQUAH-PINE LAKE RD SE, PMB 202
   SAMMAMISH, WA 98075
   PHONE: 425-657-7958
   WWW.ECOTERR.COM

   OR APPROVED EQUALS

THE PLACEMENT OF TOPSOIL AND SEEDING SHALL CONFORM TO ITEMS 653 AND 659 OF ODOT CMS.

ALL COST FOR EQUIPMENT, LABOR AND MATERIALS SHALL BE INCLUDED IN THE SQUARE YARD UNIT PRICE OF ITEM SPECIAL - MISC.: GRASS PAVEMENT SYSTEM.

ITEM 839 - TRENCH DRAIN WITH STANDARD GRATE, AS PER PLAN

THIS WORK SHALL FOLLOW ODOT'S SUPPLEMENTAL SPECIFICATIONS 839 AND 939 WITH THE FOLLOWING EXCEPTIONS:

839.03 GRATES AND FRAMES
THE CHANNEL SHALL BE COMPOSED OF SEVERAL MODULAR SECTIONS, AND SHALL HAVE AN 18" WIDE THROAT. THE MINIMUM CHANNEL INVERT SHALL BE 24" AND SHALL HAVE A MINIMUM SLOPE OF 1.00%. THE CHANNEL SHALL HAVE ALL GRATES LOCKED DOWN WITH 4 CONTIGUOUS BOLT ANCHORS PER GRATE. THE GRATES SHALL BE DUCTILE IRON, 22¼" WIDE X 20" LONG, WITH A WEIGHT OF 50.2 LBS PER LINEAR FOOT. THE GRATE SHALL HAVE A MINIMUM OPEN AREA OF 111.4 SQUARE INCHES PER LINEAR FOOT WITH A SLOT WIDTH OF 1" MINIMUM. THE GRATE SHALL BE DIN RATING OF CLASS E, ANSI RATING OF SPECIAL DUTY, H-20 LOAD RATED AND FAA LOAD RATED.

839.04 OUTLET PIPE
FURNISH AN OUTLET END ATTACHMENT TO THE TRENCH DRAIN SYSTEM THAT WILL ALLOW THE TRENCH DRAIN SYSTEM TO ACCEPT A 12" DIAMETER CONDUIT.

839.07 BASIS OF PAYMENT
THE DEPARTMENT WILL PAY FOR OUTLET PIPES UNDER 611 CONDUIT. THE DEPARTMENT WILL PAY FOR ACCEPTED QUANTITIES AT THE CONTRACT UNIT PRICE AS FOLLOWS:

PER LIN FT, ITEM 839E30001, TRENCH DRAIN WITH STANDARD GRATE, AS PER PLAN

CALCULATED TAZ CHECKED JSS

GENERAL NOTES

FRA-70-14.54

ms consultants, inc.

PLOT.CEL

ms consultants, inc.
msconsultants.com

ENVIRONMENTAL COMMITMENTS

HISTORIC RESOURCES

ACCESS SHALL BE MAINTAINED AT ALL TIMES TO THE HISTORIC RESOURCES COVERED BY SECTION 106 OF THE NATIONAL HISTORIC PRESERVATION ACT INCLUDING THE NEAR EAST SIDE HISTORIC DISTRICT, THE SOUTH HIGH COMMERCIAL GROUP HISTORIC DISTRICT, THE FORMER OHIO ASYLUM FOR THE BLIND, HANNAH NEIL HOUSE, ST. JOHN'S EVANGELICAL CHURCH, AND DELMONTE APARTMENTS BUILDING.
WITH REGARD TO HISTORIC RESOURCES COVERED BY SECTION 106 OF THE NATIONAL HISTORIC PRESERVATION ACT, TREATMENT PLANS INTENDED TO MINIMIZE HARM TO HISTORIC SITES AND DISTRICTS MUST BE IMPLEMENTED PRIOR TO THE START OF CONSTRUCTION ACTIVITY PER THE MEMORANDUM AGREEMENT (AGREEMENT NUMBER: 14242) WHICH WAS EXECUTED AUGUST 1, 2007 AND THE FIRST AMENDMENT TO THE MEMORANDUM OF AGREEMENT (AGREEMENT NUMBER: 14913) WHICH WAS EXECUTED JULY 18, 2008.

CONSTRUCTION NOISE AND VIBRATION SHALL BE MINIMIZED NEAR THE HISTORIC RESOURCES COVERED BY SECTION 106 OF THE NATIONAL HISTORIC PRESERVATION ACT INCLUDING THE NEAR EAST SIDE HISTORIC DISTRICT, THE SOUTH HIGH COMMERCIAL GROUP HISTORIC DISTRICT, THE AFRICENTRIC SCHOOL BUILDING, THE FORMER OHIO ASYLUM FOR THE BLIND, HANNAH NEIL HOUSE, ST. JOHN'S EVANGELICAL CHURCH, DELMONTE APARTMENTS BUILDING AND TRINITY LUTHERAN CHURCH.

NO CONSTRUCTION ACTIVITY OR CONSTRUCTION STAGING SHALL BE PERMITTED WITHIN THE BOUNDARIES OF THE HISTORIC RESOURCES COVERED BY SECTION 106 OF THE NATIONAL HISTORIC PRESERVATION ACT INCLUDING THE NEAR EAST SIDE HISTORIC DISTRICT, THE SOUTH HIGH COMMERCIAL GROUP HISTORIC DISTRICT, THE AFRICENTRIC SCHOOL BUILDING, THE FORMER OHIO ASYLUM FOR THE BLIND, HANNAH NEIL HOUSE, ST. JOHN'S EVANGELICAL CHURCH, DELMONTE APARTMENTS BUILDING AND TRINITY LUTHERAN CHURCH.

POST REVIEW DISCOVERIES

IF PREVIOUSLY UNIDENTIFIED ARCHAEOLOGICAL OR HISTORIC PROPERTIES, OR UNANTICIPATED EFFECTS, ARE DISCOVERED AFTER COMPLETION OF SECTION 106 REVIEW, THAT PORTION OF THE PROJECT WILL STOP IMMEDIATELY, PURSUANT TO SECTION 203.04 OF ODOTS CONSTRUCTION AND MATERIAL SPECIFICATIONS. THE ODOT PROJECT ENGINEER WILL IMMEDIATELY CONTACT ODOT-OES AND/OR THE APPROPRIATE ODOT DISTRICT ENVIRONMENTAL COORDINATOR. NO FURTHER CONSTRUCTION IN THE AREA OF DISCOVERY WILL PROCEED UNTIL THE REQUIREMENTS OF 36 CFR SECTION 800.13 HAVE BEEN SATISFIED, INCLUDING CONSULTATION WITH FEDERALLY RECOGNIZED NATIVE AMERICAN INDIAN TRIBES THAT MAY ATTACH TRADITIONAL CULTURAL AND RELIGIOUS SIGNIFICANCE TO THE DISCOVERED PROPERTY. ODOT WILL CONSULT WITH OSHPO AND INDIAN TRIBES, AS APPROPRIATE, TO RECORD, DOCUMENT AND EVALUATE NATIONAL REGISTER OF HISTORIC PLACES ELIGIBILITY OF THE PROPERTY AND THE PROJECTS EFFECT ON THE PROPERTY, AND TO DESIGN A PLAN FOR AVOIDING, MINIMIZING, OR MITIGATING ADVERSE EFFECTS ON THE ELIGIBLE PROPERTY. IF NEITHER THE SHPO NOR A FEDERALLY RECOGNIZED NATIVE AMERICAN INDIAN TRIBE FILES A TIMELY OBJECTION TO THE ODOT-OES PLAN FOR ADDRESSING THE DISCOVERY, ODOT-OES MAY CARRY OUT THE REQUIREMENTS OF 366 CFR SECTION 800.13 ON BEHALF OF FHWA AND THE ACHP NEED NOT BE NOTIFIED.

UNANTICIPATED DISCOVERIES OF HUMAN REMAINS

HISTORIC AND PREHISTORIC HUMAN REMAINS ARE SUBJECT TO PROTECTION UNDER OHIO REVISED CODE SECTIONS 2909.05 AND 2927.11. AS SUCH, IF PREVIOUSLY UNIDENTIFIED HUMAN REMAINS ARE DISCOVERED DURING CONSTRUCTION, WORK IN THAT PORTION OF THE PROJECT WILL STOP IMMEDIATELY. THE REMAINS WILL BE COVERED AND/OR PROTECTED IN PLACE IN SUCH A WAY THAT MINIMIZES FURTHER EXPOSURE OF AND DAMAGE TO THE REMAINS, AND THE ODOT PROJECT ENGINEER WILL IMMEDIATELY CONSULT WITH ODOT-OES AND THE ODOT DISTRICT ENVIRONMENTAL COORDINATOR. IF THE REMAINS ARE FOUND TO BE NATIVE AMERICAN INDIAN, A TREATMENT PLAN WILL BE DEVELOPED BY ODOT-OES AND SHPO IN CONSULTATION WITH FHWA AND APPROPRIATE FEDERALLY RECOGNIZED NATIVE AMERICAN INDIAN TRIBES. FHWA AND ODOT-OES WILL ENSURE THAT ANY TREATMENT AND REBURIAL PLAN IS FULLY IMPLEMENTED. IF THE REMAINS ARE NOT NATIVE AMERICAN INDIAN, THE APPROPRIATE LOCAL AUTHORITY WILL BE CONSULTED TO DETERMINE FINAL DISPOSITION OF THE REMAINS. AVOIDANCE AND PRESERVATION IN PLACE IS THE PREFERRED OPTION FOR TREATING HUMAN REMAINS.

FHWA AND ODOT WILL CONDUCT ALL REVIEW AND CONSULTATION IN ACCORDANCE WITH "PROGRAMMATIC AGREEMENT AMONG THE FEDERAL HIGHWAY ADMINISTRATION, THE ADVISORY COUNCIL ON HISTORIC PRESERVATION, THE OHIO HISTORICAL SOCIETY, STATE HISTORIC PRESERVATION OFFICE, AND THE STATE OF OHIO, DEPARTMENT OF TRANSPORTATION REGARDING IMPLEMENTATION OF THE FEDERAL-AID HIGHWAY PROGRAM IN OHIO (AGREEMENT NO. 12642)" (EXECUTED 7/17/06).

FOR NATIVE AMERICAN INDIAN HUMAN REMAINS DISCOVERED ON FEDERAL LANDS, THE FEDERAL LAND MANAGING AGENCY WILL BE RESPONSIBLE FOR CONSULTATION UNDER THE NATIVE AMERICAN GRAVES PROTECTION AND REPATRIATION ACT OF 1990 (PL 101-601). FOR SKELETAL REMAINS DISCOVERED ON PROPERTY OWNED BY THE STATE OF OHIO, ODOT WILL COMPLY WITH SECTION 149.53 OF THE OHIO REVISED CODE. UNDER THIS SECTION, THE DIRECTOR OF THE OHIO HISTORICAL SOCIETY SHALL DETERMINE FINAL DISPOSITION OF ANY DISCOVERED SKELETAL REMAINS.

FHWA AND ODOT WILL ALSO FOLLOW THE GUIDANCE ISSUED BY THE ADVISORY COUNCIL ON HISTORIC PRESERVATION "POLICY STATEMENT REGARDING TREATMENT OF BURIAL SITES, HUMAN REMAINS, AND FUNERARY OBJECTS" (ISSUED 2/23/07).

ENDANGERED BAT HABITAT REMOVAL

THE PROJECT IS LOCATED WITHIN THE KNOWN HABITAT RANGES OF THE FEDERALLY LISTED AND PROTECTED INDIANA BAT AND NORTHERN LONG-EARED BAT. NO TREES SHALL BE REMOVED UNDER THIS PROJECT FROM APRIL 1 THROUGH SEPTEMBER 30. ALL NECESSARY TREE REMOVAL SHALL OCCUR FROM OCTOBER 1 THROUGH MARCH 31. THIS REQUIREMENT IS NECESSARY TO AVOID AND MINIMIZE IMPACTS TO THESE SPECIES AS REQUIRED BY THE ENDANGERED SPECIES ACT. FOR THE PURPOSES OF THIS NOTE, A TREE IS DEFINED AS A LIVE, DYING, OR DEAD WOODY PLANT, WITH A TRUNK THREE INCHES OR GREATER IN DIAMETER AT A HEIGHT OF 4.5 FEET ABOVE THE GROUND SURFACE, AND WITH A MINIMUM HEIGHT OF 13 FEET.

CONSTRUCTION NOISE

THE CONTRACTOR SHALL ENSURE THAT ALL CONSTRUCTION EQUIPMENT SHALL WILL BE OPERATED IN COMPLIANCE WITH ALL APPLICABLE CITY OF COLUMBUS ORDINANCES AND REGULATIONS PERTAINING TO CONSTRUCTION NOISE, INCLUDING SECTION 2329.11 OF THE COLUMBUS CITY CODE. THE CONTRACTOR SHALL BE RESPONSIBLE FOR ANY AND ALL FINES ASSESSED DUE TO NON-COMPLIANCE WITH THE CITY NOISE ORDINANCE.

THE CONSTRUCTION NOISE MITIGATION IDENTIFIED AND LISTED BELOW SHALL BE USED TO MINIMIZE CONSTRUCTION NOISE. THE FOLLOWING SHALL APPLY TO CONSTRUCTION ACTIVITY DURING NIGHTTIME AND WEEKEND OPERATIONS:

A. DIESEL POWERED VEHICLES SHALL NOT IDLE LONGER THAN 3 MINUTES. IDLING TIMES FOR OTHER VEHICLES AND INTERNAL COMBUSTION ENGINE POWERED EQUIPMENT SHALL ALSO BE MINIMIZED.

B. ROUTING CONSTRUCTION EQUIPMENT THROUGH THE LOCAL STREET NETWORK SHALL BE AVOIDED OR MINIMIZED.

C. FLASHING ARROW PANELS (FAPS) AND PORTABLE CHANGEABLE MESSAGE SIGNS (PCMS) SHALL BE SOLAR POWERED.

D. JACKHAMMERS OR PAVEMENT BREAKERS SHALL BE OPERATED ELECTRICALLY OR HYDRAULICALLY. PNEUMATIC JACKHAMMERS SHALL ONLY BE USED IF EQUIPPED WITH PNEUMATIC DISCHARGE MUFFLERS, CERTIFIED BY THE MANUFACTURER.

E. EXHAUST MUFFLERS, CERTIFIED BY THE MANUFACTURER, SHALL BE USED ON ALL INTERNAL COMBUSTION ENGINES.

F. USE OF ELECTRIC SAWS RATHER THAN AIR OR GASOLINE-POWERED SAWS SHALL BE REQUIRED.

CONSTRUCTION NOISE AND VIBRATION SHALL BE MINIMIZED NEAR THE HISTORIC RESOURCES COVERED BY SECTION 106 OF THE NATIONAL HISTORIC PRESERVATION ACT.

NOTIFICATION

CITY OF COLUMBUS EMERGENCY SERVICES, SCHOOL SYSTEMS, FRANKLIN COUNTY, OTHER PUBLIC SERVICE PROVIDERS, AND LOCAL BUSINESSES SHALL BE NOTIFIED PRIOR TO CONSTRUCTION ON FREEWAY MAINLINES, RAMPS, OR BRIDGES.

ALL DETOUR ROUTES AND PROVISIONS FOR LOCAL ACCESS ARE CLEARLY POSTED IN ADVANCE OF PROJECT CONSTRUCTION.

ITEM 619 FIELD OFFICE, TYPE C, AS PER PLAN

IN ADDITION TO THE REQUIREMENTS PROVIDED IN CMS FOR THE TYPE OF FIELD OFFICE SPECIFIED, PROVIDE AN ADDITIONAL UNOBSTRUCTED 625 SQ FT (MINIMUM) AREA OF FLOOR SPACE TO BE USED AS A CONFERENCE ROOM FOR PROJECT RELATED MEETINGS, INCLUDING SIX 30"X72" WORK TABLES AND 36 FOLDABLE OR STACKABLE CHAIRS. ALSO PROVIDE THE FOLLOWING ITEMS:

[1] FOR EACH TELEPHONE AND/OR COMPUTER STATION SPECIFIED, PROVIDE ALL ETHERNET WIRING NECESSARY TO CONNECT THE PHONE AND/OR COMPUTER AND MULTI-FUNCTION COPIER TO THE INTERNET COMPANY SYSTEM.

[5] PROVIDE A BROADBAND INTERNET CONNECTION CAPABLE OF MINIMUM DOWNLOAD SPEEDS AS FOLLOWS: 30 MBPS DOWNLOAD 5 MBPS UPLOAD - NETWORK LATENCY LESS THAN 50 MILLISECONDS. IF SPEEDS ARE NOT AVAILABLE THROUGH AN INDIVIDUAL OR SINGULAR CIRCUIT, PROVIDE THE HIGHEST SPEED AVAILABLE IN THE AREA AND INSTALL MULTIPLE CIRCUITS TO ACHIEVE THE SPECIFIED SPEEDS. WHEN MULTIPLE BROADBAND SERVICES ARE AVAILABLE, THE FOLLOWING IS THE DESCENDING ORDER OF PRECEDENCE: CABLE, DSL, CELLULAR, AND WIRELESS RADIO (SATELLITE COMMUNICATION IS NOT COMPATIBLE WITH ODOT VPN CONNECTION AND WILL NOT BE ACCEPTED). SUPPLY MODEMS CAPABLE OF BEING CONFIGURED IN BRIDGE MODE. IF A CELLULAR NETWORK IS USED, PROVIDE THE CELLULAR EQUIPMENT, INCLUDING SOFTWARE AND ROUTER EQUIPMENT TO CONNECT TO THE ODOT PROVIDED CISCO ASA 5505 FIREWALL. SUPPLY ODOT WITH ALL DOCUMENTATION FOR THE BROADBAND CIRCUIT INCLUDING ALL USERNAME/USER IDS, PASSWORDS AND ACCOUNT INFORMATION. VERIFY THAT THE BROADBAND INTERNET CONNECTION IS ACTIVE AND WORKING AS SPECIFIED. ODOT IT PERSONNEL WILL CONFIRM THAT BANDWIDTH AND NETWORK LATENCY ARE COMPLIANT WITH THE REQUIRED FIELD OFFICE SPECIFICATIONS. ALL FIELD OFFICE INTERNET CONNECTIONS ARE FOR ODOT USE ONLY.

PN 121 CLARIFICATIONS

DESCRIPTION OR LOCTATION OF CRITICAL WORK	COMPLETION DATE	TIME PERIOD	DISINCENTIVE $ PER TIME PERIOD	INCENTIVE $ PER TIME PERIOD	MAXIMUM INCENTIVE $
1. PHASES 1-4	10/15/2020	DAY	$14,000	N/A	N/A
2. FRA-70-1461P	3/15/2021	DAY	$6,700	N/A	N/A

THE ITEMS OF WORK THAT MUST BE COMPLETED BY THE INTERIM COMPLETION DATE ARE DESCRIBED BELOW:

1. ALL WORK IN THE WORK AREAS SHOWN AND DESCRIBED IN PROJECT PHASES 1 THROUGH 4 (AS DESCRIBED IN THE MAINTENANCE OF TRAFFIC PLANS) SHALL BE COMPLETED. THIS INCLUDES ALL WORK COMPLETED AND ALL LANES OPEN TO TRAFFIC IN THEIR FINAL CONIGURATION FOR EASTBOUND I-70 AND RAMP N3; PCB REMOVED FROM EXISTING WESTBOUND I-70 BRIDGE; AND PHASE 5 PAVEMENT MARKINGS IN PLACE.

2. ALL WORK FOR THE COMPLETION OF THE FRA-70-1461P STRUCTURE SHALL BE COMPLETED AND OPEN TO TRAFFIC. THIS INCLUDES ALL LANES OPEN TO TRAFFIC IN THEIR FINAL CONFIGURATION AND PAVEMENT MARKINGS.

CALCULATED - CHECKED -

GENERAL NOTES

FRA-70-14.54

Ohio DOT Workspace 70\71 East Interchange 2E
www.msconsultants.com
UCF: ohdotV8i
ADDENDUM 03\CLEAN\V8i_ms_std.tbl
PCF: 60-06634_2E_Columbus
Batchplot Spec: \\msconsultants.com\files\production\03\60\06634_2E\standards\plotdrv\batchplt.spc
Pen Table: \\msconsultants.com\files\Production\03\60\06634_2E\deliverables\2019-02-26
Plot Driver: \\msconsultants.com\files\Standards\ustn\ohdot\v8i\ms\plotting\PDF.pltcfg
34" x 22"
Model: Sheet View: SHEET
Printed: 2/28/2019 @ 1:11:37 PM By: hbrendlinger
File: \\msconsultants.com\files\Production\03\60\06634_2E\roadway\sheets\105322GN003.dgn

ms consultants, inc.

PLOT.CEL

ms consultants, inc.
msconsultants.com

www.msconsultants.com

Ohio DOT Workspace
70\71 East Interchange 2E

1" 0.5" 0

Batchplot Spec: \\msconsultants.com\files\Production\03\60\06634_2E\standards\plotdrv\batchplt.SPC
Pen Table: \\msconsultants.com\files\Standards\standards\ohdot\V8i\ms\plotting\pen\V8i_ms_std.TBL
Plot Driver: \\msconsultants.com\files\Standards\standards\ohdot\v8i\ms\plotting\PDF.pltcfg

34" x 22"

Model: Sheet View: SHEET
Printed: 1/11/2019 @ 1:59:42 PM By: dhall
File: \\msconsultants.com\Files\Production\03\60\06634_2E\roadway\sheets\1053220N004.dgn

ITEM 608- WALKWAY, MISC.: COLUMBUS CURB RAMP TYPE A, G AND P-1, AS PER PLAN

ALL CURB RAMPS SHALL BE CONSTRUCTED IN ACCORDANCE WITH CITY OF COLUMBUS SPECIFICATION ITEM 608 AND DETAILS ON SHEETS 1195- 1201

FOR CURB RAMPS WITH DETECTABLE WARNINGS SEE SHEET 1201, FOR GENERAL NOTE AND SHEET 1200, STD DRAWING 2319 FOR DETAIL.

GRATINGS, VALVE BOXES, AND UTILITY BOXES SHALL NOT BE LOCATED IN THE RAMP, LANDING, DETECTABLE WARNINGS, OR TRANSITION AREAS.

A MINIMUM OF 1 GALLON OF CURING MEMBRANE SHALL BE USED FOR EACH 200 SQUARE FEET OF SURFACE TREATED.

PAYMENT FOR THIS WORK SHALL INCLUDE ALL LABOR, TOOLS, EQUIPMENT, NECESSARY MATERIALS.

DRAINAGE AT INTERSECTION STREETS

AT INTERSECTING STREETS WHERE THE DRAINAGE IS TOWARD OR INTO THE PROJECT, SPECIAL CARE SHALL BE TAKEN BY THE CONTRACTOR TO MAINTAIN PROPER GRADE ALONG THE EDGE OF PAVEMENT SO THAT WATER WILL NOT POND. AT INTERSECTING STREETS, WHERE THE EDGE OF PAVEMENT CONTINUES ACROSS THE STREET, CARE SHALL BE TAKEN TO FEATHER DOWN AND FORM A NEAT SEAM WITH THE PROPER GRADE.

EXISTING PLANS

EXISTING PLANS ENTITLED FRA-70-15.25, FRA-AFRICENTRIC RETAINING WALL, FRA-62-1530, FRA-70-1282, FRA-70-1383, FRA-70-1344, & FRA-70-1469 MAY BE INSPECTED IN THE ODOT DISTRICT 6 OFFICE IN DELAWARE, OHIO.

BENCHING OF FOUNDATION SLOPES

ALTHOUGH CROSS-SECTIONS INDICATE SPECIFIC DIMENSIONS FOR PROPOSED BENCHING OF THE EMBANKMENT FOUNDATIONS IN CERTAIN AREAS, NO WAIVER OF THE SPECIFICATIONS IS INTENDED. BENCH ALL OTHER SLOPED EMBANKMENT AREAS AS SET FORTH IN 203.05. NO ADDITIONAL PAYMENT WILL BE MADE FOR BENCHING REQUIRED UNDER THE PROVISIONS OF 203.05

ITEM 609 - CURB, MISC.: STRAIGHT 18" GRANITE CURB, AS PER PLAN

REFERENCE SHEET 1111 FOR ADDITIONAL INFORMATION ON MATERIALS AND CONSTRUCTION OF STRAIGHT 18" GRANITE CURB. ALL LABOR, EQUIPMENT, AND MATERIALS NECESSARY FOR CONSTRUCTION SHALL BE INCLUDED IN THE UNIT COSTS OF THE FOLLOWING ITEMS:

ITEM 609 - CURB, MISC.: STRAIGHT 18" GRANITE CURB AS PER PLAN "A" FOR MT. AIRY GRANITE COLOR

ITEM 609 - CURB, MISC.: RESET EXISTING GRANITE CURB, AS PER PLAN

THE EXISTING GRANITE CURB SHALL BE REMOVED, STORED AND RESET AT THE FOLLOWING LOCATIONS:

ALONG THE NE CORNER OF GRANT AVENUE AND FULTON STREET FROM THE LIMITS OF FULL DEPTH PAVEMENT REPLACEMENT ALONG GRANT AVENUE TO FULTON STREET, STA. 62+45.46.

ALONG PARSONS AVE. SOUTH OF MOOBERRY ST. THIS INCLUDES THE MEDIAN.

THE CONTRACTOR SHALL NOT DAMAGE THE EXISTING GRANITE CURB DURING REMOVAL. THE CONTRACTOR SHALL STORE THE EXISTING GRANITE CURB AT A SAFE LOCATION PRIOR TO RESETTING THE EXISTING CURB. IF THE CONTRACTOR DAMAGES THE EXISTING CURB, HE SHALL REPLACE THE GRANITE CURBING WITH SAME FINISH AND COLOR GRANITE AT HIS COST.

ALL LABOR, EQUIPMENT AND MATERIALS NECESSARY FOR REMOVAL, STORAGE, RESETTING AND CONSTRUCTION OF THE GRANITE CURBING SHALL BE INCLUDED IN THE UNIT COSTS OF:

ITEM 202E32300 - GRANITE CURB REMOVED FOR RE-USE

ITEM 609E98000 - CURB, MISC.: RESET EXISTING GRANITE CURB, AS PER PLAN.

ITEM 608 - WALKWAYS, MISC.: BRICK PAVER CROSSWALK/WALK, AS PER PLAN

SEE DETAILS, SHEETS 1113 & 1114.

BRICK PAVERS CONSTRUCTION FOR CROSSWALKS SHALL FOLLOW THE CITY OF COLUMBUS SUPPLEMENTAL SPECIFICATION 1524. SEE GENERAL NOTE SHEETS 84 AND 85. THE COLOR LISTED BELOW ON THIS SHEET SHALL APPLY TO BOTH.

ALL BRICK PAVEMENT PLACEMENT WILL REQUIRE ALL NEW BRICK PAVERS, FURNISHED AND INSTALLED BY THE CONTRACTOR. NO SALVAGEABLE BRICKS ARE TO BE REUSED, ALL SALVAGEABLE BRICKS ARE TO BE CLEANED AND PALLETIZED, NO MORE THAN 3' HIGH, SHRINK WRAPPED AND DELIVERED TO THE CITY OF COLUMBUS OPERATIONS YARD, LOCATED AT 1850 E. 25TH AVENUE.

THE FOLLOWING SUPPLIER CAN PROVIDE THE NEW BRICKS:

HAMILTON PARKER COMPANY
1865 LEONARD AVENUE
COLUMBUS, OHIO 43219
(614) 358-7956
WWW.HAMILTONPARKER.COM

THE BELDEN BRICK COMPANY
P.O. BOX 20910
CANTON, OH 44701-0910
(330) 451-2031
WWW.BELDENBRICK.COM

(OR APPROVED EQUAL)

BRICK SPECIFICATIONS
MATERIAL: SOLID FIRECLAY BRICK
SIZE: 8" X 4" X 2¾" (HEAVY DUTY)
8" X 4" X 2¼" (LIGHT DUTY)
COLOR: PATHWAY FULL RANGE

PAVER WALK CONCRETE BASE

ALL WORK FOR THE CONCRETE BASE SHALL CONFORM TO ITEM 608, EXCEPT THAT THE ITEM 608 REQUIREMENTS FOR EDGING OUTSIDE EDGES AND CONTROL JOINTS AT 5-FOOT INTERVALS SHALL BE WAIVED.

THE CONCRETE BASE SHALL BE CORE DRILLED WITH A 2" DIAMETER BIT THROUGH THE ENTIRE DEPTH OF THE BASE. THE WEEP HOLES SHALL BE LOCATED FLUSH WITH THE PROPOSED CURB AND IN ALL LOW LYING AREAS ALONG THE SLAB WHICH COULD POTENTIALLY TRAP WATER. THE WEEP HOLES SHALL BE SPACED EVERY 6 FOOT ON CENTER. FINAL LAYOUT OF WEEP HOLES SHALL BE SET BY THE CONTRACTOR AND MARKED ON THE BASE PRIOR TO DRILLING FOR APPROVAL BY THE ENGINEER-IN-CHARGE. ONCE THE CORING IS COMPLETE THE HOLE SHALL BE FILLED WITH #9 WASHED AGGREGATE,

NON-ANGULAR, AND CLEANED. FILTER FABRIC SHALL BE PLACED ALONG THE CURB LINE AT A WIDTH OF 12" AND TURNED UP ALONG THE CURB PRIOR TO THE PLACEMENT OF THE SETTING BED. COSTS FOR WEEP HOLE INSTALLATION, INCLUDING DRILLING, AGGREGATE FILL, AND FILTER FABRIC SHALL BE INCLUDED WITHIN THE BID COSTS OF ITEM 608 - WALKWAY MISC.: BRICK PAVER WALK, AS PER PLAN AND ITEM 608 - MISC.: BRICK PAVER CROSSWALK, AS PER PLAN.

NEOPRENE MODIFIED ASPHALT ADHESIVE

FURNISH NEOPRENE MODIFIED ASPHALT ADHESIVE THAT CONTAINS 2 PERCENT NEOPRENE, GRADE WM1, OXIDIZED ASPHALT WITH A 150 DEGREE SOFTENING POINT (77 PENETRATION), AND 10 PERCENT LONG FIBERIZED INERT MATERIAL AS SUPPLIED BY:

KARNAK
330 CENTRAL AVENUE
CLARK, NJ 07066
(800) 526-4236
http://www.karnakcorp.com

HANOVER ARCHITECTUAL PRODUCTS
5000 HANOVER ROAD
HANOVER, PA 17331
(717) 637-0500
http://www.hanoverpavers.com

(OR APPROVED EQUAL)

ALL COSTS FOR EQUIPMENT, LABOR, AND MATERIALS SHALL BE INCLUDED IN THE SQUARE FOOT UNIT PRICE OF ITEM 608 - WALKWAY, MISC.: BRICK PAVER WALK, AS PER PLAN AND ITEM 608 - WALKWAY, MISC.: BRICK PAVER CROSSWALK, AS PER PLAN.

EDGING

WHERE THE BRICK PAVER WALK ABUTS THE LAWN, IF NEEDED, THE CONTRACTOR SHALL USE EDGING AS SHOWN ON MISC. DETAIL SHEET 1213, STD. DWG. 2301, BRICK SIDEWALK DETAIL TO HOLD THE BRICKS IN PLACE. THE COST FOR THE EDGING SHALL BE INCLUDED IN THE COST FOR ITEM 608 - WALKWAY MISC.: BRICK PAVER WALK, AS PER PLAN.

BITUMINOUS SETTING BED

FURNISH ASPHALT CEMENT CONFORMING TO ASTM D3381, VISCOSITY GRADE AC-10 OR AC-20. FURNISH FINE AGGREGATE OF NATURAL SAND AND/OR STONE SAND, COMPOSED OF HARD, TOUGH, DURABLE, UNCOATED PARTICLES, FREE FROM CLAY, SILT, ORGANIC MATERIAL OR OTHER DELETERIOUS SUBSTANCES, INSURE THE SAND IS UNIFORMLY GRADED WITH ALL MATERIAL PASSING THE NO. 4 SIEVE AND MEETING THE REQUIREMENTS OF ASTM C136.

COMBINE THE DRIED FINE AGGREGATE WITH HOT ASPHALT CEMENT AND MIX HEAT TO APPROXIMATELY 300 DEGREES FAHRENHEIT AT AN ASPHALT PLANT.

PROVIDE AN APPROXIMATE PROPORTION OF MATERIALS OF 7 PERCENT ASPHALT CEMENT AND 93 PERCENT FINE AGGREGATE.

PROVIDE EACH TO APPORTION BY WEIGHT TO 140 POUNDS OF ASPHALT CEMENT AND 1,860 POUNDS OF FINE AGGREGATE.

ALL COSTS FOR EQUIPMENT, LABOR, AND MATERIALS SHALL BE INCLUDED IN THE SQUARE FOOT UNIT PRICE OF ITEM 608 - WALKWAY MISC.: BRICK PAVER WALK, AS PER PLAN AND ITEM SPECIAL MISC.: BRICK PAVER CROSSWALK, AS PER PLAN. NO SEPARATE PAYMENT SHALL BE MADE.

BRICK PAVER JOINTING SAND AND SEALER

BRICK PAVERS SHALL BE TOPPED WITH JOINTING SAND WITH PAVER JOINTS BEING COMPLETELY FILLED WITH SPECIFIED SAND TO THE BOTTOM OF BRICK PAVER CHAMFERS (OR 1/8 - INCH BELOW TOP OF PAVER) AS SPECIFIED; GRADATION FOR JOINTING SAND SHALL BE POLYMERIC MANUFACTURED SAND MEETING THE GRADATION REQUIREMENTS OF ASTM C144.

METHOD OF MEASUREMENT

PAVERS SHALL BE MEASURED BY THE SQUARE FOOTAGE OF THE FINISHED PAVERS THAT ARE CONSIDERED COMPLETED IN PLACE.

BASIS OF PAYMENT

THE ACCEPTED QUANTITIES OF PAVERS WILL BE PAID FOR AT THE CONTRACT PRICES DESIGNATED FOR EACH PAVER TYPE SHOWN ON THE PLANS. EXCAVATION, BACKFILL, SUBGRADE PREPARATION AND COMPACTION, EXPANSION JOINT MATERIAL, ASPHALT ADHESIVE, BITUMINOUS SETTING BED, 4-INCH AND 8-INCH CONCRETE BASE, AND OTHER RELATED MISCELLANEOUS ITEMS WILL NOT BE PAID FOR SEPARATELY. ALL COSTS SHALL BE INCLUDED IN THE SQUARE FOOT UNIT PRICE OF ITEM 608 - MISC.: BRICK PAVER WALK, AS PER PLAN AND ITEM 608 - MISC.: BRICK PAVER CROSSWALK, AS PER PLAN.

MISC.: DETAILS - CITY OF COLUMBUS STANDARD DRAWINGS

ANY MISCELLANEOUS DETAILS LOCATED WITHIN THIS CONSTRUCTION DOCUMENT THAT REFER TO THE CITY OF COLUMBUS STANDARD DRAWINGS, SHALL BE USED IN CONJUNCTION WITH THE 2018 CITY OF COLUMBUS SPECIFICATIONS FOR CONSTRUCTION INCLUDING ALL REVISIONS, CHANGES AND SUPPLEMENTAL SPECIFICATIONS LISTED IN THE PROPOSAL.

PONDING

THE CONTRACTOR IS RESPONSIBLE FOR REPAIRS TO ALL AREAS THAT HOLD WATER AFTER CONSTRUCTION OF THE CURB RAMPS. THESE AREAS INCLUDE ANY AND ALL AREAS WITHIN THE PEDESTRIAN RIGHT-OF-WAY APPROACHING AND LEAVING THE NEWLY CONSTRUCTED CURB RAMP. AREAS OF PONDING CANNOT BE IDENTIFIED UNTIL AFTER ADEQUATE RAINFALL HAS OCCURRED AND REPAIR TO THESE AREAS WILL NOT OCCUR UNTIL AFTER SUCH TIME.

CALCULATED - CHECKED -

GENERAL NOTES

FRA-70-14.54

ms consultants, inc.

PLOT.CEL

ms consultants, inc.
msconsultants.com

www.msconsultants.com
Ohio DOT Workspace
70\71 East Interchange 2E
PCF: 60-06634_2E_Columbus
CDF: ohdot\V8i
Batchplt Spec: \\msconsultants.com\files\production\03\60\06634_2E\standards\plotdrv\batchplt.spc
Pen Table: N:\03\60\06634_2E\standards\tables\V8i_ms_std_with_cloudsinColor.tbl
Plot Driver: \\msconsultants.com\files\Standards\ustn\ohdot\v8i\ms\plotting\PDF.pltdrv

Model: Sheet
Printed: 2/13/2019 @ 2:05:39 PM View: FENCE_VIEW1
File: \\msconsultants.com\files\Production\03\60\06634_2E\roadway\sheets\1053220N005.dgn By: hbrendinger

34" x 22"

CONNECTION BETWEEN EXISTING AND PROPOSED GUARDRAIL

WHEN IT IS NECESSARY TO SPLICE PROPOSED GUARDRAIL TO EXISTING GUARDRAIL, ONLY THE EXISTING GUARDRAIL SHALL BE CUT, DRILLED, OR PUNCHED. THE CONNECTION SHALL BE MADE USING A "W-BEAM RAIL SPLICE" AS SHOWN IN AASHTO M 180. PAYMENT SHALL BE INCLUDED IN THE CONTRACT PRICE FOR THE RESPECTIVE GUARDRAIL ITEMS.

CROSSINGS AND CONNECTIONS TO EXISTING PIPES AND UTILITIES

WHERE PLANS PROVIDE FOR A PROPOSED CONDUIT TO BE CONNECTED TO, OR CROSS OVER OR UNDER AN EXISTING SEWER OR UNDERGROUND UTILITY, THE CONTRACTOR SHALL LOCATE THE EXISTING PIPES OR UTILITIES BOTH AS TO LINE AND GRADE BEFORE STARTING TO LAY THE PROPOSED CONDUIT.

IF IT IS DETERMINED THAT THE ELEVATION OF THE EXISTING CONDUIT, OR EXISTING APPURTENANCE TO BE CONNECTED, DIFFERS FROM THE PLAN ELEVATION OR RESULTS IN A CHANGE IN THE PLAN CONDUIT SLOPE, THE ENGINEER SHALL BE NOTIFIED BEFORE STARTING CONSTRUCTION OF ANY PORTION OF THE PROPOSED CONDUIT WHICH WILL BE AFFECTED BY THE VARIANCE IN THE EXISTING ELEVATIONS.

IF IT IS DETERMINED THAT THE PROPOSED CONDUIT WILL INTERSECT AN EXISTING SEWER OR UNDERGROUND UTILITY IF CONSTRUCTED AS SHOWN ON THE PLAN, THE ENGINEER SHALL BE NOTIFIED BEFORE STARTING CONSTRUCTION OF ANY PORTION OF THE PROPOSED CONDUIT WHICH WOULD BE AFFECTED BY THE INTERFERENCE WITH AN EXISTING FACILITY.

PAYMENT FOR ALL THE OPERATIONS DESCRIBED ABOVE SHALL BE INCLUDED IN THE CONTRACT PRICE FOR THE PERTINENT 611 CONDUIT ITEM.

REVIEW OF DRAINAGE FACILITIES (ODOT) FREEWAY SYSTEM

BEFORE ANY WORK IS STARTED ON THE PROJECT AND AGAIN BEFORE FINAL ACCEPTANCE BY THE STATE, REPRESENTATIVES OF THE STATE AND THE CONTRACTOR, ALONG WITH LOCAL REPRESENTATIVES, SHALL MAKE AN INSPECTION OF ALL EXISTING SEWERS WHICH ARE TO REMAIN IN SERVICE AND WHICH MAY BE AFFECTED BY THE WORK. THE CONDITION OF THE EXISTING CONDUITS AND THEIR APPURTENANCE SHALL BE DETERMINED FROM FIELD OBSERVATIONS. RECORDS OF THE INSPECTION SHALL BE KEPT IN WRITING BY THE STATE.

ALL NEW CONDUITS, INLETS, CATCH BASINS, AND MANHOLES CONSTRUCTED AS A PART OF THE PROJECT SHALL BE FREE OF ALL FOREIGN MATTER AND IN A CLEAN CONDITION BEFORE THE PROJECT WILL BE ACCEPTED BY THE STATE.

ALL EXISTING SEWERS INSPECTED INITIALLY BY THE ABOVE MENTIONED PARTIES SHALL BE MAINTAINED AND LEFT IN A CONDITION REASONABLY COMPARABLE TO THAT DETERMINED BY THE ORIGINAL INSPECTION. ANY CHANGE IN THE CONDITION RESULTING FROM THE CONTRACTOR'S OPERATIONS SHALL BE CORRECTED BY THE CONTRACTOR TO THE SATISFACTION OF THE ENGINEER.

PAYMENT FOR ALL OPERATIONS DESCRIBED ABOVE SHALL BE INCLUDED IN THE CONTRACT PRICE FOR THE PERTINENT 611 CONDUIT ITEMS.

UNRECORDED STORM WATER DRAINAGE

FURNISH A CONTINUANCE FOR ALL UNRECORDED STORM WATER DRAINAGE, SUCH AS ROOF DRAINS, FOOTER DRAINS, OR YARD DRAINS, DISTURBED BY THE WORK. FURNISH EITHER AN OPEN CONTINUANCE OR AN UNOBSTRUCTED CONTINUANCE BY CONNECTING A CONDUIT THROUGH THE CURB OR INTO A DRAINAGE STRUCTURE. THE LOCATION, TYPE, SIZE AND GRADE OF THE NEEDED CONDUIT TO REPLACE OR EXTEND AN EXISTING DRAIN WILL BE DETERMINED BY THE ENGINEER. ALL SUCH CONTINUANCE REQUIRES A RIGHT OF WAY USE PERMIT. FOR A CONDUIT THROUGH A CURB, REFER TO THE MISC. DETAIL SHEET 1923 FOR THE (COC SCD 2320) PIPE ROOF DRAIN.

THE FOLLOWING CONDUIT TYPES MAY BE USED: 707.33, 707.41 NON-PERFORATED, 707.42, 707.43, 707.45, 707.46, 707.47, 707.51, 707.52 SDR35.

THE FOLLOWING ESTIMATED QUANTITIES HAVE BEEN INCLUDED IN THE GENERAL SUMMARY FOR USE AS DIRECTED BY THE ENGINEER FOR THE WORK NOTED ABOVE:

611, 8" COND., TYPE B, FOR DRAINAGE CONNECTION	500 FT.
611, 8" COND., TYPE C, FOR DRAINAGE CONNECTION	500 FT.
611, 4" COND., TYPE E, FOR DRAINAGE CONNECTION	500 FT.
611, 4" COND., TYPE F, FOR DRAINAGE CONNECTION	500 FT.

ROUNDING

THE ROUNDING AT SLOPE BREAKPOINTS SHOWN ON THE TYPICAL SECTIONS APPLIES TO ALL CROSS-SECTIONS EVEN THOUGH OTHERWISE SHOWN.

MANHOLE, NO. 3, AS PER PLAN

ANY PROPOSED MANHOLES LOCATED IN THE FREEWAY AND RAMPS PROPOSED PAVEMENT SHALL BE CONSTRUCTED 2.0' BELOW THE PAVEMENTS SUBGRADE WITH A SOLID FLAT SLAB TOP WITH NO FRAME AND COVER AND NO OPENING IN THE FLAT SLAB TOP FOR A FRAME AND COVER.

ALL MATERIALS AND LABOR, INCLUDING EXCAVATION AND BACKFILL ARE PAID FOR AT THE CONTRACT PRICE FOR ITEM 611 - MANHOLE, NO. 3, AS PER PLAN.

TYING INTO EXISTING DRAINAGE STRUCTURES

WHEN A PROPOSED CONDUIT IS BEING TIED INTO AN EXISTING DRAINAGE STRUCTURE, THE HOLE BEING MADE IN THE EXISTING STRUCTURE TO RECEIVE THE PROPOSED CONDUIT SHALL BE A CORED HOLE. FOR CONDUITS OVER 24", THE HOLE CAN BE NEATLY SAWED INSTEAD OF CORED.

THE COST OF TYING INTO AN EXISTING DRAINAGE STRUCTURE SHALL BE INCLUDED IN THE COST OF INSTALLING ITEM 611 CONDUIT.

ITEM 611 - MANHOLE RECONSTRUCTED TO GRADE, AS PER PLAN

ANY EXISTING MANHOLE THAT IS TO REMAIN AND IS LOCATED IN THE PROPOSED PAVEMENT LIMITS, AND IS CALLED OUT AS MANHOLE RECONSTRUCTED TO GRADE, AS PER PLAN, SHALL BE RECONSTRUCTED 2.0' BELOW THE PAVEMENT'S SUBGRADE. THE EXISTING MANHOLE SHALL BE RECONSTRUCTED 2.0' BELOW THE PAVEMENT'S SUBGRADE WITH A SOLID FLAT SLAB TOP WITH NO FRAMES AND COVER AND NO OPENING IN THE FLAT SLAB TOP FOR A FRAME AND COVER.

ALL MATERIALS AND LABOR, INCLUDING EXCAVATION AND BACKFILL ARE PAID FOR AT THE CONTRACT PRICE OF ITEM 611 - MANHOLE RECONSTRUCT TO GRADE, AS PER PLAN.

TRENCH DRAINS

THE USE OF SLOTTED DRAIN WILL NOT BE ALLOWED IN THE CONSTRUCTION OF FRA-70-14.54. TRENCH DRAINS WILL BE USED IN PLACE OF THE SLOTTED DRAINS AND WILL FOLLOW THE SUPPLEMENTAL SPECIFICATIONS SS839 AND SS939.

ODOT WILL NOT ALLOW THE TRENCH DRAINS TO BE VALUED ENGINEERED TO A SLOTTED DRAIN.

ITEM 606 - ANCHOR ASSEMBLY, MGS, TYPE E

THIS ITEM SHALL CONSIST OF FURNISHING AND INSTALLING ANY OF THE GUARDRAIL END TERMINALS FOR TYPE MGS GUARDRAIL AS LISTED ON ROADWAY ENGINEERING'S WEB PAGE UNDER ROADSIDE SAFETY DEVICES FOR APPROVED GUARDRAIL END TREATMENTS. INSTALLATION SHALL BE AT THE LOCATIONS SPECIFIED IN THE PLANS, IN ACCORDANCE WITH THE MANUFACTURER'S SPECIFICATIONS.

THE FACE OF THE TYPE E IMPACT HEAD SHALL BE COVERED WITH A SHEET OF TYPE G REFLECTIVE SHEETING, PER CMS 730.19.

REFER TO THE MANUFACTURER'S INSTRUCTIONS REGARDING THE INSTALLATION OF, AND THE GRADING AROUND THE FOUNDATION TUBES AND GROUND STRUT. THE TOP OF ANY FOUNDATION TUBE SHOULD BE LESS THAN 4 INCHES ABOVE THE GROUND. THE PLACEMENT OF THE FOUNDATION TUBES SHOULD BE AN APPROPRIATE DEPTH BELOW THE LEVEL LINE IN ORDER TO MAINTAIN THE FINISHED GUARDRAIL HEIGHT OF 27.75 INCHES FROM THE EDGE OF THE SHOULDER.

ON-SITE GRADING IS REQUIRED IF THE TOP OF THE FOUNDATION TUBES OR TOP OF THE GROUND STRUT DOES PROJECT MORE THAN 4 INCHES ABOVE THE GROUND LINE.

PAYMENT FOR THE ABOVE WORK SHALL BE MADE AT THE UNIT PRICE BID FOR ITEM 606, ANCHOR ASSEMBLY, TYPE E, EACH, AND SHALL INCLUDE ALL LABOR, TOOLS, EQUIPMENT AND MATERIALS NECESSARY TO CONSTRUCT A COMPLETE AND FUNCTIONAL ANCHOR ASSEMBLY SYSTEM, INCLUDING ALL RELATED TRANSITIONS, REFLECTIVE SHEETING, HARDWARE, GRADING, EMBANKMENT AND EXCAVATION NOT SEPARATELY SPECIFIED, AS REQUIRED BY THE MANUFACTURER.

ITEM 606 - IMPACT ATTENUATOR, TYPE 1 UNIDIRECTIONAL

THIS ITEM SHALL CONSIST OF FURNISHING AND INSTALLING ANY ONE OF THE TYPE 1 IMPACT ATTENUATORS AS LISTED ON THE OFFICE OF ROADWAY ENGINEERING'S WEB PAGE. INSTALLATION SHALL BE AT THE LOCATIONS SPECIFIED IN THE PLANS, IN ACCORDANCE WITH THE MANUFACTURER'S SPECIFICATIONS. REFER TO THE PLAN SHEETS FOR ATTENUATOR DESIGN INFORMATION.

THE FACE OF THE TYPE 1 IMPACT HEAD SHALL BE COVERED WITH A SHEET OF TYPE G REFLECTIVE SHEETING, PER CMS 730.19. PAYMENT FOR THE ABOVE WORK SHALL BE MADE AT THE UNIT PRICE BID FOR ITEM 606, IMPACT ATTENUATOR, TYPE 1 UNIDIRECTIONAL, EACH, AND SHALL INCLUDE ALL LABOR, TOOLS, EQUIPMENT AND MATERIALS NECESSARY TO CONSTRUCT A COMPLETE AND FUNCTIONAL IMPACT ATTENUATOR SYSTEM, INCLUDING ALL RELATED TRANSITIONS, HARDWARE, REFLECTIVE SHEETING AND GRADING, NOT SEPARATELY SPECIFIED, AS REQUIRED BY THE MANUFACTURER.

ITEM 611 - MANHOLE, NO. 3, AS PER PLAN "A"

THE PROPOSED MANHOLE NO. 3, AS PER PLAN "A" SHALL BE CONSTRUCTED TO ODOT'S STANDARD DRAWING MH-1.2, WITH THE EXCEPTION OF THE FRAME AND COVER. THE CONTRACTOR SHALL USE A NEENAH FOUNDRY FRAME R-1771, AND GRATED COVER R-2418, EAST JORDAN IRON WORKS, CATALOG 17, CATALOG #1450 FRAME AND COVER WITH TYPE M FLAT GRATE OR APPROVED EQUAL. THE FRAME AND COVER SHALL MEET THE REQUIREMENTS AS NOTED ON ODOT'S STANDARD CONSTRUCTION DRAWING MH-1.1.

MONUMENT ASSEMBLIES

CONSTRUCT MONUMENT ASSEMBLIES IN ACCORDANCE WITH THE DETAILS SHOWN ON THE STANDARD CONSTRUCTION DRAWINGS AND AT THE LOCATIONS LISTED BELOW PER STANDARD CONSTRUCTION DRAWING RM-1.1.

REFERENCE MONUMENT, TYPE A
CENTERLINE PT I-70, STA 809+54.86, 115.00' LEFT & 110.00' RIGHT

MONUMENT ASSEMBLY, TYPE C
CENTERLINE POT PARSONS AVENUE, STA. 183+16.67, 0.00' LEFT

THE FOLLOWING QUANTITIES HAVE BEEN INCLUDED IN THE GENERAL SUMMARY FOR USE AT THE LOCATIONS NOTED ABOVE.

623, REFERENCE MONUMENT	2 EACH
623, MONUMENT ASSEMBLY	1 EACH

CALCULATED TAZ CHECKED JSS

GENERAL NOTES

FRA-70-14.54

ms consultants, inc.

PLOT.CEL

ms consultants, inc.
msconsultants.com

www.msconsultants.com

Ohio DOT Workspace
70\71 East Interchange 2E

1"
0
0.5"

PDF: ohdot\V8i
PDF: 60-06634_2E_Columbus

Batchplot Spec: \\msconsultants.com\files\production\03\60\06634_2E\standards\plotdir\batchplt.SPC
Pen Table: \\msconsultants.com\files\Standards\astm\ohdot\V8\ms\plotting\pen\V8i_ms_std.TBL
Plot Driver: \\msconsultants.com\files\Standards\astm\ohdot\V8\ms\plotting\PDF.pltclg

Model: Sheet
Printed: 1/10/2019 @ 11:31:11 AM
File: \\msconsultants.com\files\Production\03\60\06634_2E\roadway\sheets\1053226N007.dgn

34" x 22"

View: SHEET
By: dhall

WORK LIMITS

THE WORK LIMITS SHOWN ON THESE PLANS ARE FOR PHYSICAL CONSTRUCTION ONLY. PROVIDE THE INSTALLATION AND OPERATION OF ALL WORK ZONE TRAFFIC CONTROL AND WORK ZONE TRAFFIC CONTROL DEVICES REQUIRED BY THESE PLANS WHETHER INSIDE OR OUTSIDE THESE WORK LIMITS.

PROTECTION OF RIGHT-OF-WAY LANDSCAPING

PRIOR TO BEGINNING WORK, THE CONTRACTOR, THE PROJECT ENGINEER, AND A REPRESENTATIVE OF THE MAINTAINING AGENCY WILL REVIEW AND RECORD ALL LANDSCAPING ITEMS WITHIN THE RIGHT OF WAY (BOTH WITHIN AND OUTSIDE THE CONSTRUCTION LIMITS) A RECORD OF THIS REVIEW WILL BE ACCEPTANCE, A FINAL REVIEW OF LANDSCAPING ITEMS WILL BE MADE.

CONSTRICT ALL ACTIVITIES, EQUIPMENT STORAGE, AND STAGING TO WITHIN THE CONSTRUCTION LIMITS. UNLESS OTHERWISE IDENTIFIED IN THE PLANS OR PROPOSAL, THE CONSTRUCTION LIMITS ARE IDENTIFIED AS 30 FEET FROM EDGE OF PAVEMENT. TREES THAT ARE LABLED AS DND WITHIN THE WORK LIMITS SHALL BE PROTECTED. THE CONTRACTOR SHALL AVOID PARKING ANY EQUIPMENT WITHIN THE DRIP EDGE OF THE CANOPY.

SUBMIT A WRITTEN REQUEST TO THE PROJECT ENGINEER TO USE ANY AREA OUTSIDE THESE LIMITS. THE DOCUMENT SUBMITTED MUST CLEARLY IDENTIFY THE AREA AND EXPLAIN THE PROPOSED USE AND RESTORATION OF THE AREA. DISPOSAL OF WASTE MATERIAL AND CONSTRUCTION DEBRIS, EXCAVATION OF BORROW MATERIAL AND PLACEMENT OF PORTABLE PLANTS IS PROHIBITED. THE REQUEST MUST BE APPROVED, IN WRITING, BEFORE THE CONTRACTOR HAS PERMISSION TO USE THE AREA.

ANY ITEMS DAMAGED BEYOND THE CONSTRUCTION LIMITS OR WITHIN THE CONSTRUCTION LIMITS ON LANDSCAPING LABELED AS DND, AS DEFINED ABOVE WILL BE REPLACED IN KIND OR AS APPROVED BY THE PROJECT ENGINEER.

ITEM 204 - PROOF ROLLING

THE FOLLOWING QUANTITY IS PROVIDED IN THE GENERAL SUMMARY TO ADDRESS LOCATIONS REQUIRING PROOF ROLLING. SEE PAVEMENT CALCULATIONS FOR ADDITIONAL INFORMATION.

ITEM 204 - PROOF ROLLING 74 HOURS

FENCE LENGTHS

THE LENGTHS OF FENCE SHOWN IN THE PLANS ARE HORIZONTAL DIMENSIONS. MEASUREMENTS OF THE FINAL QUANTITIES WILL BE IN ACCORDANCE WITH ITEM 607.

ITEM 203 - EMBANKMENT, AS PER PLAN

PLACE AND COMPACT EMBANKMENT MATERIAL IN 6 INCH LIFTS FOR THE CONSTRUCTION OF THE APPROACH EMBANKMENT AT THE FOLLOWING LOCATIONS:

ITEM 203 - EMBANKMENT, AS PER PLAN		
ALIGNMENT	STRUCTURE	EMBANKMENT, AS PER PLAN (CY)
I-70	FRA-70-1476	13,007
I-70	FRA-70-1493 FRA-70-1498	25,508
RAMP N1	FRA-70-1461P	150
RAMP N2	FRA-70-1476	616
RAMP N3	FRA-70-1461P	1,495
RAMP N3	FRA-70-1476	584
RAMP N4	FRA-70-1461P	83
RAMP N4	FRA-70-1476	6,778
RAMP Q3	FRA-70-1498	3,814
MOOBERRY	FRA-70-1498	7,936
PARSONS	FRA-70-1493	45
	TOTAL	60,016

ITEM 204 - SUBGRADE COMPACTION AND PROOF ROLLING

CONSTRUCT THE SUBGRADE AS FOLLOWS AND IN THE FOLLOWING SEQUENCE:

1. SHAPE THE SUBGRADE TO WITHIN 0.2 FEET OF THE PLAN SUBGRADE ELEVATION.
2. EXCAVATE AND REPLACE UNSUITABLE SUBGRADE BEFORE PROOF ROLLING. THE EXCAVATION LIMITS ARE SHOWN AND LABELED ON THE CROSS SECTIONS AS UNSUITABLE SUBGRADE. UNSUITABLE SUBGRADE INCLUDES UNSUITABLE SOIL (A-4B, A-2-5, A-5, A-7-5, AND SOIL WITH A LIQUID LIMIT GREATER THAN 65) AND ANY COAL, SHALE, OR ROCK WHICH NEEDS TO BE REMOVED ACCORDING TO 204.05.

   IF THERE IS UNSUITABLE SUBGRADE IN A SHALLOW FILL LOCATION, EXCAVATE AND REPLACE THE UNSUITABLE SUBGRADE BEFORE CONSTRUCTING THE SHALLOW FILL AND SHAPING THE SUBGRADE.
3. COMPACT THE SUBGRADE ACCORDING TO 204.03.
4. APPROXIMATE LIMITS FOR EXCAVATION OF UNSTABLE SUBGRADE ARE SHOWN AND LABELED ON THE CROSS SECTIONS AS UNSTABLE SUBGRADE. THE ENGINEER WILL IDENTIFY THE ACTUAL LIMITS OF EXCAVATION FOR UNSTABLE SUBGRADE BASED ON THE PROOF ROLLING RESULTS AND VISUAL OBSERVATIONS.

   PROOF ROLL THE COMPACTED SUBGRADE ACCORDING TO 204.06.
5. EXCAVATE UNSTABLE SUBGRADE AS DIRECTED BY THE ENGINEER AND STABILIZE BY REPLACING WITH THE SPECIFIED MATERIALS ACCORDING TO 204.07. EXCAVATIONS WILL EXTEND 18 INCHES BEYOND THE EDGE OF THE SURFACE OF THE PAVEMENT, PAVED SHOULDERS, OR PAVED MEDIANS.
6. PROOF ROLL THE STABILIZED AREAS ACCORDING TO 204.06 TO VERIFY STABILITY.
7. FINE GRADE THE SUBGRADE TO THE SPECIFIED GRADE.

THE QUANTITIES FOR EXCAVATING THE UNSUITABLE SUBGRADE AND UNSTABLE SUBGRADE ARE BOTH PAID UNDER ITEM 204 EXCAVATION OF SUBGRADE.

CONTRACTION AND/OR EXPANSION JOINTS

ALTHOUGH SPECIFIC LOCATIONS OF CERTAIN CONTRACTION AND EXPANSION JOINTS HAVE BEEN DETAILED ON THIS PLAN, NO WAIVER OF THE SPECIFICATIONS IS INTENDED. IN ALL CASES, THE PROVISION OF EXPANSION JOINTS AT ALL MAJOR STRUCTURES INCLUDING THE MAXIMUM SPACING BETWEEN CONTRACTION JOINTS IS IN ACCORDANCE WITH STANDARD CONSTRUCTION DRAWING BP-2.2 AND THE SPECIFICATIONS.

CONTRACTION JOINTS IN CONCRETE PAVEMENT OR BASE WIDENING

WHERE NEW CONCRETE IS PLACED ADJACENT TO EXISTING CONCRETE, PROVIDE CONTRACTION JOINTS IN THE NEW CONCRETE TO FORM CONTINUOUS JOINTS WITH THOSE IN THE EXISTING CONCRETE.

THE MAXIMUM DISTANCE BETWEEN THE JOINTS IN THE NEW CONCRETE ARE IN ACCORDANCE WITH STANDARD CONSTRUCTION DRAWING BP-2.2, IF NECESSARY, ADDITIONAL JOINTS MAY BE PROVIDED IN THE NEW CONCRETE AT APPROXIMATELY EQUAL INTERVALS BETWEEN EXISTING JOINTS THAT EXCEED THE MAXIMUM SPACING.

PART-WIDTH CONSTRUCTION

BECAUSE OF THE NECESSITY TO BUILD THIS PROJECT UNDER TRAFFIC AND TO CONSTRUCT THE FULL PAVEMENT WIDTH IN STAGES, EXERCISE CARE TO PREVENT THE CONSTRUCTION OF A BUTT JOINT IN THE BASE COURSES. LAP LONGITUDINAL JOINTS AS SHOWN ON STANDARD CONSTRUCTION DRAWING BP-3.1.

EXCAVATION OF SUBGRADE OVER EXISTING UTILITIES

FOR THE EXISTING UTILITIES TO REMAIN WITHIN THE PROPOSED ROADWAY UNDERCUT LIMITS, THE CONTRACTOR SHALL VERIFY THE LOCATIONS OF THE EXISTING UTILITIES TO REMAIN AND PERFORM THE EXCAVATION WITH EXTREME CAUTION AS TO NOT DAMAGE THE EXISTING UTILITIES. CONTRACTOR SHALL USE CAUTION WHEN PLACING AND COMPACTING THE GRANULAR MATERIAL AS TO NOT DAMAGE THE EXISTING UTILITIES. SHOULD THE EXISTING UTILITIES BE DAMAGED DURING THE EXCAVATION OF SUBGRADE OR PLACEMENT OF THE GRANUALT MATERIAL, THE CONTRACTOR WILL BE RESPONSIBLE FOR THE DAMAGE AT NO EXPENSE TO THE PROJECT.

MEDIAN AND/OR CURBING ON APPROACH SLABS

WITHIN THE LIMITS OF THE APPROACH SLAB, TRANSITION THE SHAPE OF THE MEDIAN AND/OR CURBING ON APPROACH SLABS FROM THE STANDARD SECTION ON THE APPROACHES TO THE SECTION USED ON THE BRIDGE.

PAVEMENT RESTORATION FOR DRAINAGE STRUCTURE INSTALLATIONS ON CITY STREETS

ANY STORM SEWER CONSTRUCTION ON THE CITY STREET SYSTEM THAT REQUIRES PAVEMENT RESTORATION OF THE EXISTING PAVEMENT TO MAINTAIN TRAFFIC, SHALL BE RESTORED PER THE CITY OF COLUMBUS STANDARD DRAWING 1441. SEE MISC DETAIL SHEETS 1944 -1944C.

ALL LABOR, MATERIALS AND EQUIPMENT FOR THE PAVEMENT RESTORATION SHALL BE INCLUDED IN THE CONTRACT PRICE FOR THE PERTINENT ITEM 611, CONDUIT, AS PER PLAN.

LICENSED SEWER TAPPER REQUIREMENT

IT SHALL BE UNLAWFUL FOR ANY PERSON TO ENGAGE IN THE BUSINESS OF SEWER TAPPING AND SEWER BUILDING, OR TO OPEN OR TAP ANY SEWER IN ANY STREET, ALLEY OR ANY PUBLIC OR PRIVATE PLACE OR REHABILITATION OF ANY SEWER OR APPURTENANCES (INCLUDING MANHOLES, INLETS AND SERVICE LATERALS) IN THE CITY OF COLUMBUS WITHOUT FIRST SECURING LICENSE TO ENGAGE IN SUCH BUSINESS, AS INDICATED IN COLUMBUS CITY CODE SECTION 1131.01. UTILIZATION OF SUBCONTRACTOR MUST MEET THE LICENSING REQUIREMENTS OF CITY OF COLUMBUS BUILDING CODE, IN PARTICULAR SECTION 4114.119 AND 4114.529.

STORM WATER FACILITIES (CITY OF COLUMBUS) CITY STREETS

BEFORE ANY WORK IS STARTED ON THE PROJECT AND AGAIN BEFORE FINAL ACCEPTANCE BY THE OWNER, THE ENGINEER AND THE CONTRACTOR SHALL MAKE AN INSPECTION OF ALL EXISTING SEWERS WHICH ARE TO REMAIN IN SERVICE AND WHICH MAY BE AFFECTED BY THE WORK. THE CONDITION OF THE EXISTING CONDUITS AND THEIR APPURTENANCES SHALL BE DETERMINED FROM FIELD OBSERVATIONS. THE ENGINEER SHALL KEEP RECORDS OF THE INSPECTION IN WRITING.

ALL NEW CONDUITS, INLETS, CATCH BASINS, AND MANHOLES CONSTRUCTED OR RECONSTRUCTED AS A PART OF THE PROJECT SHALL BE FREE OF ALL FOREIGN MATTER AND IN A CLEAN CONDITION BEFORE THE PROJECT WILL BE ACCEPTED BY THE OWNER.

ALL EXISTING MANHOLES, CATCH BASINS, DRAINS, SEWERS, AND APPURTENANCES INSPECTED INITIALLY BY THE ABOVE MENTIONED PARTIES SHALL BE MAINTAINED AND LEFT IN A CONDITION REASONABLY COMPARABLE TO THAT DETERMINED BY THE ORIGINAL INSPECTION. THE CONTRACTOR SHALL CORRECT ANY CHANGE IN THE CONDITION RESULTING FROM THE CONTRACTOR'S OPERATIONS TO THE SATISFACTION OF THE ENGINEER. THE ABOVE IS NOT APPLICABLE FOR STRUCTURES TO BE ABANDONED. THE CONTRACTOR SHALL REMOVE DEBRIS, SILT, ETC. FROM THE EXISTING MANHOLES AND CATCH BASINS THAT HAVE BEEN AFFECTED BY CONSTRUCTION OPERATIONS. THE CONTRACTOR SHALL MAINTAIN SERVICE IN EXISTING SEWERS DURING CONSTRUCTION.

PAYMENT FOR ALL OPERATIONS DESCRIBED ABOVE SHALL BE INCLUDED IN THE CONTRACT PRICE FOR THE PERTINENT ITEM 611, CONDUIT, AS PER PLAN.

CALCULATED TAZ
CHECKED JSS

GENERAL NOTES

FRA-70-14.54

ms consultants, inc.

EXISTING DRANAGE SYSTEMS

EXISTING DRAINAGE SYSTEMS (FIELD TILES, ROOF DRAIN OUTLETS, SUMP PUMPS, ETC.) ENCOUNTERED DURING CONSTRUCTION OF THE NEW STORM SEWER OR REMOVAL OF EXISTING STORM SEWERS SHALL BE EXTENDED AS NECESSARY AND BLIND TAPPED TO THE NEW STORM SEWER PER DIVISION OF SEWERAGE AND DRAINAGE STANDARD DRAWING AA-S159 OR CONNECTED TO THE CATCH BASIN AS DIRECTED BY THE ENGINEER.

IF THE CONTRACTOR ENCOUNTERS A PIPE OR CONNECTION TO THE STORM SEWER THAT IN THE ESTIMATE OF THE ENGINEER MAY BE AN ILLICIT CONNECTION FROM AN ON-SITE SEWAGE DISPOSAL SYSTEM, COLUMBUS PUBLIC HEALTH SHALL BE CONTACTED AT 645-6448 TO DETERMINE WHETHER THE PIPE MAY BE RECONNECTED TO THE CITY'S STORM SEWER SYSTEM.

CLEAN WATER CONNECTIONS TO SANITARY SEWERS

ROOF DRAINS, FOUNDATION DRAINS, DRAIN TILES, AND OTHER CLEAN WATER CONNECTIONS TO THE SANITARY SYSTEM ARE PROHIBITED.

CERTIFICATION OF PIPE AND STRUCTURES

AS PART OF ITEM 611, CONDUIT, AS PER PLAN ALL CONCRETE PIPE, STORM AND SANITARY STRUCTURES WITHIN THE CITY OF COLUMBUS'S RIGHT-OF-WAYS WILL BE STAMPED OR HAVE SUCH IDENTIFICATION NOTING THAT SAID PIPE, STORM AND SANITARY STRUCTURES HAVE BEEN INSPECTED BY THE DESIGNATED REPRESENTATIVE OF THE CITY OF COLUMBUS AND MEETS THEIR SPECIFICATIONS. PIPE AND STRUCTURES WITHOUT PROPER IDENTIFICATION WILL NOT BE PERMITTED FOR INSTALLATION.

BRICK PAVER CROSSWALK CONSTRUCTION PROTECTION

DURING THE CONSTRUCTION ACTIVITIES FOR FRA-70-14.54, THE CONTRACTOR SHALL PROTECT THE NEWLY INSTALLED BRICK PAVERS IN THE CROSSWALK FROM DAMAGE.

THE CONTRACTOR SHALL PROTECT THE BRICK PAVER IN THE CROSSWALK BY COVERING THE NEWLY INSTALLED PAVER WITH 3/4" COMPOSITE BOARD, COVERED BY A STEEL PLATE. OTHER MEANS OF PROTECTING THE BRICK PAVERS FROM CONSTRUCTION ACTIVITIES MAY BE USED ONLY IF PRIOR APPROVAL IS RECEIVED FROM THE ENGINEER.

ANY DAMAGE TO THE BRICK PAVER DUE TO CONSTRUCTION ACTIVITIES SHALL BE REPLACED AT THE CONTRACTOR'S EXPENSE.

DIVISION OF SEWERAGE AND DRAINAGE UTILITIES

CITY OF COLUMBUS LOCATORS WILL ONLY LOCATE AND MARK MAIN LINE SEWERS. THE CONTRACTOR IS RESPONSIBLE FOR LOCATING ALL SERVICE LATERALS AND FIELD VERIFYING THE LOCATION OF MAIN SEWER LINES. ANY DAMAGE AND/OR REPAIRS TO THE MAIN SEWER LINES OR SERVICE LATERALS ARE THE RESPONSIBILITY OF THE SEWER CONTRACTOR. REPAIRS MUST BE COMPLETED BY A LICENSED SEWER CONTRACTOR UNDER A SEPARATE SEWER PERMIT.

GRADE CHANGES

IF IT IS DETERMINED THAT THE ELEVATION OF THE EXISTING SEWER, OR EXISTING APPURTENANCE TO BE CONNECTED, DIFFERS FROM THE PLAN ELEVATION OR RESULTS IN A CHANGE IN THE PLAN SEWER SLOPE, THE ENGINEER SHALL BE NOTIFIED BEFORE STARTING CONSTRUCTION OF ANY PORTION OF THE PROPOSED SEWER WHICH WILL BE AFFECTED BY THE VARIANCE IN THE EXISTING ELEVATIONS. IF IT IS DETERMINED THAT THE PROPOSED SEWER WILL INTERSECT AN EXISTING SEWER OR UNDERGROUND UTILITY IF CONSTRUCTED AS SHOWN ON THE PLAN, THE ENGINEER SHALL BE NOTIFIED BEFORE STARTING CONSTRUCTION OF ANY PORTION OF THE PROPOSED SEWER WHICH WOULD BE AFFECTED BY THE INTERFERENCE WITH AN EXISTING FACILITY.

GRADES AND ELEVATIONS SHOWN ON THE PLANS SHALL NOT BE REVISED UNDER ANY CIRCUMSTANCES WITHOUT FIRST OBTAINING WRITTEN APPROVAL FROM THE ENGINEER. INVERT ELEVATIONS SHALL NOT DEVIATE FROM PLAN ELEVATION BY MORE THAN 0.05 FOOT. FAILING TO MEET THE ABOVE REQUIREMENTS IS CAUSE FOR REJECTION OF THE AFFECTED SECTION OF SEWER.

SANITARY SEWER LATERAL CONNECTIONS

ANY LATERAL RECONNECTIONS MADE IN AN AREA OF PIPE REPLACEMENT SHALL BE PAID AS ITEM 915 - LATERAL RECONNECTION PER THE COC MATERIALS SPECIFICATIONS.

THIS PAY ITEM SHALL INCLUDE ALL LABOR AND MATERIALS NECESSARY TO MAKE THIS SERVICE CONNECTION COMPLETE AND READY FOR SERVICE. CONTRACTOR SHALL BE RESPONSIBLE FOR FIELD VERIFYING THE SIZE AND NUMBER OF EXISTING OPEN LATERALS AND SUPPLYING THE PROPER MATERIALS.

ITEM SPECIAL - FILL AND PLUG EXISTING CONDUIT

THIS ITEM SHALL CONSIST OF THE CONSTRUCTION OF BULKHEADS IN AN EXISTING CONDUIT AND FILLING THE AREA THUS SEALED OFF WITH ITEM 613, SAND OR OTHER MATERIAL APPROVED BY THE ENGINEER. "SEE PLANS FOR PIPE SIZE"

BULKHEADS SHALL BE LOCATED AT THE LIMITS OF THE AREA TO BE FILLED AS INDICATED ON THE PLANS. THE BULKHEADS SHALL CONSIST OF BRICK OR CONCRETE MASONRY WITH A MINIMUM THICKNESS OF 12 INCHES.

THE FILL MATERIAL SHALL BE PUMPED INTO PLACE, OR PLACED BY OTHER MEANS APPROVED BY THE ENGINEER, SO THAT, AFTER SETTLEMENT, AT LEAST 90 PERCENT OF THE CROSS-SECTIONAL AREA OF THE CONDUIT, FOR ITS ENTIRE LENGTH, SHALL BE FILLED. THE LENGTH OF FILLED AND PLUGGED CONDUIT TO BE PAID FOR SHALL BE THE ACTUAL NUMBER OF FEET (MEASURED ALONG THE CENTERLINE OF EACH CONDUIT FROM OUTER FACE TO OUTER FACE OF BULKHEADS) FILLED AND PLUGGED AS DESCRIBED ABOVE.

IN LIEU OF FILLING AND PLUGGING THE EXISTING CONDUIT, THE PIPE MAY BE CRUSHED AND BACKFILLED IN ACCORDANCE WITH THE PROVISIONS OF 203, OR IT MAY BE REMOVED. THE LENGTH, MEASURED AS PROVIDED ABOVE, SHALL BE PAID FOR AT THE CONTRACT PRICE PER FOOT FOR, ITEM SPECIAL, FILL AND PLUG EXISTING CONDUIT.

EXISTING UNDERDRAINS

PROVIDE UNOBSTRUCTED OUTLETS FOR ALL EXISTING UNDERDRAINS ENCOUNTERED DURING CONSTRUCTION. PROVIDE AN OUTLET PER STANDARD CONSTRUCTION DRAWING DM-1.1 FOR ALL UNDERDRAINS THAT OUTLET TO A SLOPE.

UNDERDRAINS THAT CAN BE CONNECTED TO THE NEW OR EXISTING UNDERDRAINS AT THE END OF THE PROJECT LIMITS AS WELL AS ALL NECESSARY BENDS OR BRANCHES REQUIRED FOR CONNECTION ARE INCLUDED IN THE BASIS OF PAYMENT FOR UNCLASSIFIED PIPE UNDERDRAINS.

THE FOLLOWING ESTIMATED QUANTITIES HAVE BEEN INCLUDED IN THE GENERAL SUMMARY FOR THE WORK NOTED ABOVE:

601, TIED CONCRETE BLOCK MAT, TYPE 1	7.11 SQ. YD.
611, 4" CONDUIT, TYPE F	200 FT.
611, PRECAST REINFORCED CONCRETE OUTLET	4 EACH
605, 6" UNCLASSIFIED PIPE UNDERDRAINS	200 FT.

TEMPORARY DRAINAGE ITEMS

TEMPORARY DRAINAGE ITEMS LABELED ON THE MAINTENANCE OF TRAFFIC PLAN ARE ITEMIZED ON THE MOT PLANS. PAYMENT FOR THE TEMPORARY DRAINAGE ITEMS ARE ITEMIZED AND CARRIED TO THE GENERAL SUMMARY.

SEEDING AND MULCHING

THE FOLLOWING QUANTITIES ARE PROVIDED TO PROMOTE GROWTH AND CARE OF PERMANENT SEEDED AREAS:

659, SOIL ANALYSIS TEST	2 EACH
659, TOPSOIL	10,795 CU. YD.
659, SEEDING AND MULCHING	97,255 SQ. YD.
659, REPAIR SEEDING AND MULCHING	4,863 SQ. YD.
659, INTER-SEEDING	4,863 SQ. YD.
659, COMMERCIAL FERTILIZER	13.57 TON
659, LIME	20.09 ACRES
659, WATER	276 M. GAL.
659, MOWING	876 M. SQ. FT.

SEEDING AND MULCHING SHALL BE APPLIED TO ALL AREAS OF EXPOSED SOIL BETWEEN THE RIGHT-OF-WAY LINES, AND WITHIN THE CONSTRUCTION LIMITS FOR AREAS OUTSIDE THE RIGHT-OF-WAY LINES COVERED BY WORK AGREEMENT OR SLOPE EASEMENT. QUANTITY CALCULATIONS FOR SEEDING AND MULCHING ARE BASED ON THESE LIMITS.

ITEM 611 - CONDUIT, MISC.: C900 & C905 PIPE, AS PER PLAN

THE CONTRACTOR SHALL USE C900 & C905 PIPE, CLASS AND DR "AS SPECIFIED ON PLAN SHEET QUANTITY", FOR THE PURPOSE OF STORM SEWER PIPE ONLY. THE C900 AND C905 PIPE SHALL BE USED ONLY WHERE SPECIFIED. THE MINIMUM VERTICAL CLEARANCE BETWEEN THE C900 STORM SEWER PIPE AND THE EXISTING WATERLINE SHALL BE 12" FROM OUTSIDE OF PIPE TO OUTSIDE OF PIPE.
THE DEPARTMENT WILL PAY FOR ACCEPTED QUANTITIES AT THE CONTRACT PRICES AS FOLLOWS:

ITEM 611 - CONDUIT, MISC. 12" C900 PIPE, CLASS 150, DR 18, TYPE B, AS PER PLAN

ITEM 611 - CONDUIT, MISC. 18" C905 PIPE, CLASS 235, DR 18, TYPE B, AS PER PLAN

ITEM 202 - MANHOLE REMOVED, AS PER PLAN

THE EXISTING JUNCTION CHAMBER WITH MANHOLE TOP AT I-70 STA. 777+84.34, 33.35' LT. SHALL BE COMPLETELY REMOVED PRIOR TO CONSTRUCTING THE RECIVING PIT FOR THE 60" STORM SEWER TO BE BORED OR JACKED. THE CONTRACTOR IS RESPONSIBLE FOR MAINTAINING THE STORM SEWER FLOW AT THIS VITAL JUNCTION, UNTIL THE NEW JUNCTION CHAMBER IS CONSTRUCTED. ALL WORK SHALL FOLLOW ODOT'S 2016 SPECIFICTATIONS.

ITEM 202 - REMOVAL, MISC.: VACANT AEP CONDUIT BANK REMOVED

AMERICAN ELECTRIC POWER HAS EXISTING VACANT CONCRETE ENCASED CONDUIT LOCATED UNDER MOOBERRY STREET. THIS CONDUIT WILL BE IN CONFLICT WITH THE PROPOSED STORM SEWER INSTALLATION AND SHALL BE REMOVED AT THE LOCATIONS SHOWN IN THE PLANS.

THE CONTRACTOR SHALL NOTIFY AMERICAN ELECTRIC POWER A MINIMUM OF TWO (2) WEEKS PRIOR TO REMOVAL OF THE EXISTING CONDUIT BANK TO ENSURE THAT IT IS VACANT.

ALL COSTS TO COMPLETE THIS WORK, INCLUDING LABOR, TOOLS, MATERIALS AND EQUIPMENT SHALL BE INCLUDED IN THE UNIT BID PRICE FOR:

ITEM 202 - REMOVAL, MISC.: VACANT AEP CONDUIT BANK REMOVED (FT)

ITEM 202 - PORTIONS OF STRUCTURE REMOVED, AS PER PLAN

AMERICAN ELECTRIC POWER HAS AN EXISTING VACANT CONCRETE MANHOLE LOCATED AT STA. 181+68.17, 26.14' RT. ON PARSONS AVENUE. THIS MANHOLE WILL BE IN CONFLICT WITH THE PROPOSED LOWERING OF THE PARSONS AVENUE PROFILE AND SHALL BE REMOVED AS DESCRIBED BELOW.

THE CONTRACTOR SHALL REMOVE THE MANHOLE NECK, TOP SLAB AND SIDEWALLS TO A POINT 1 FOOT BELOW PROPOSED SUBGRADE. THE REMAINING VOID SHALL BE BACKFILLED WITH ITEM 613 - LOW STRENGTH MORTAR BACKFILL.

THE CONTRACTOR SHALL NOTIFY AMERICAN ELECTRIC POWER A MINIMUM OF TWO (2) WEEKS PRIOR TO PERFORMING THE DESCRIBED WORK TO ENSURE THAT THE MANHOLE IS VACANT.

ALL COSTS TO COMPLETE THIS WORK, INCLUDING LABOR, TOOLS, MATERIALS AND EQUIPMENT SHALL BE INCLUDED IN THE UNIT BID PRICE FOR:

ITEM 202 - PORTIONS OF STRUCTURE REMOVED, AS PER PLAN (LUMP)

ITEM 611 - CONDUIT BORED OR JACKED

WHERE IT IS SPECIFIED THAT A CONDUIT BE INSTALLED BY THE METHOD OF BORING OR JACKING, NO TRENCH EXCAVATION SHALL BE CLOSER THAN (15') FIFTEEN FEET TO THE EDGE OF PAVEMENT. PROVIDE A STEEL CASING PIPE CONFORMING TO 748.06 HAVING JOINTS WITH A CIRCUMFERENTIAL FULLY PENETRATING B-U4B WELD THAT IS PERFORMED BY AN ODOT APPROVED FIELD WELDER. THE INSTALLED CASING PIPE IS THE STORM WATER CONVEYANCE CARRIER UNLESS OTHERWISE SPECIFIED IN THE PLANS. HYDROSTATIC TESTING IS NOT REQUIRED FOR THE CASING PIPE.

CALCULATED TAZ
CHECKED JSS

GENERAL NOTES

FRA-70-14.54

PLOT.CEL
ms consultants, inc.
msconsultants.com
Ohio DOT Workspace
70\71 East Interchange 2E
www.msconsultants.com
UCF: ohdotV8i
PCF: 60-06634_2E_Columbus
Batchplot Spec: \\msconsultants.com\files\production\03\60\06634_2E\standards\plotdrv\batchplt.spc
Pen Table: \\msconsultants.com\files\Standards\ustn\ohdot\V8i\ms\plotting\pen\V8i_ms_std.tbl
Plot Driver: \\msconsultants.com\files\Standards\ustn\ohdot\v8i\ms\plotting\PDF.pltcfg
34" x 22"
Model: Sheet View: FENCE_VIEW1
Printed: 6/19/2018 @ 7:57:42 AM By: jdouglas
File: N:\03\60\06634_2E\roadway\sheets\105322GN007A.dgn
ms consultants, inc.

PLOT.CEL

ms consultants, inc.
msconsultants.com

www.msconsultants.com

Ohio DOT Workspace
70\71 East Interchange 2E

1"
0.5"
0

PDF: ohdot\V8i
PDF: 60-06634_2E_Columbus

Batchplot Spec: \\msconsultants.com\files\production\03\60\06634_2E\standards\plotdir\batchplt.SPC
Pen Table: \\msconsultants.com\files\Standards\astn\ohdot\V8\ms\plotting\pen\V8i_ms_std.tbl
Plot Driver: \\msconsultants.com\files\Standards\astn\ohdot\V8\ms\plotting\PDF.pltcfg

34" x 22"

View: SHEET
By: dhall

Model: Sheet
Printed: 1/10/2019 @ 5:18:34 PM
File: \\msconsultants.com\files\Production\03\60\06634_2E\roadway\sheets\1053226N010.dgn

CALCULATED TAZ
CHECKED JSS

GENERAL NOTES

ITEM 208 VIBRATION CONTROL AND MONITORING, AS PER PLAN

THE CONTRACTOR SHALL CONTROL AND MONITOR VIBRATIONS WHEN PERFORMING DEMOLITION AND CONSTRUCTION ACTIVITIES NEAR BUILDINGS, STRUCTURES, OR UTILITIES THAT MAY BE SUBJECT TO DAMAGE FROM CONSTRUCTION INDUCED GROUND VIBRATIONS. DEMOLITION ACTIVITIES INCLUDE REMOVAL OF EXISTING BRIDGES, RETAINING WALLS, PAVEMENTS, AND FOUNDATIONS. CONSTRUCTION ACTIVITIES INCLUDE INSTALLATION OF DRILLED SHAFTS, PILE DRIVING, USE OF VIBRATORY ROLLERS, OR ANY OTHER OPERATION THAT CAUSES VIBRATION. VIBRATION CONTROL AND MONITORING SHALL CONFORM TO THE CONSTRUCTION AND MATERIALS SPECIFICATION (CMS) ITEM 208.15, EXCEPT AS MODIFIED BELOW:

1. ALL REFERENCES TO BLASTING SHALL INSTEAD APPLY TO DEMOLITION AND CONSTRUCTION ACTIVITIES.
2. THE VIBRATION SPECIALIST'S EXPERIENCE REQUIREMENT SHALL APPLY FOR VIBRATION MONITORING AND NEED NOT BE SPECIFIC TO ROCK BLASTING PROJECTS.

THE CONTRACTOR SHALL CONDUCT A PRE-CONSTRUCTION SURVEY OF ANY BUILDINGS, STRUCTURES, AND UTILITIES LOCATED WITHIN LIMITS DETERMINED BY THE VIBRATION SPECIALIST AND PROVIDE THE ENGINEER WITH PRECONSTRUCTION AUDIO-VIDEO COLOR RECORDING AS FOLLOWS:

A. RECORDING. CONSTRUCTION IN ANY AREA SHALL NOT START UNTIL THE AREA HAS BEEN RECORDED AND THE DVDS SUBMITTED TO THE ENGINEER.

B. VISUAL INSPECTION. PRIOR TO RECORDING, ALL AREAS TO BE RECORDED SHALL BE INVESTIGATED VISUALLY WITH NOTATION MADE OF FEATURES NOT READILY VISIBLE BY RECORDING METHODS. THIS WOULD INCLUDE, BUT NOT BE LIMITED TO, CULVERTS (SIZE, TYPE AND CONDITION) AND MANHOLES THAT MAY BE PARTIALLY BURIED. RECORD ALL MEASUREMENTS MADE DURING THE INSPECTION.

C. APPROVALS. ALL RECORDING SHALL BE CONDUCTED IN THE PRESENCE OF THE DEPARTMENT UNLESS WAIVED BY THE ENGINEER. AT THE START OF RECORDING, THE CONTRACTOR SHALL SUBMIT A SAMPLE RECORDING OF A PORTION OF THIS PROJECT FOR THE ENGINEER TO REVIEW. THE SAMPLE RECORDING SHALL BE APPROVED BEFORE ANY OTHER RECORDING IS ALLOWED.

D. CERTIFICATION. UPON COMPLETION OF THE WORK, THE CONTRACTOR SHALL PROVIDE CERTIFICATION IN WRITING TO THE ENGINEER THAT ALL THE REQUIREMENTS OF THE AUDIO-VIDEO COLOR RECORDING FOR THIS PROJECT WERE ACCOMPLISHED IN ACCORDANCE WITH THESE SPECIFICATIONS:

E. IDENTIFICATION. ALL RECORDINGS (DVDS AND CASES) SHALL BE PROPERLY IDENTIFIED BY RECORDING NUMBER, LOCATION, AND PROJECT NAME IN A MANNER ACCEPTABLE TO THE ENGINEER.

F. RECORD. A RECORD OF THE CONTENTS OF EACH RECORDING SHALL BE SUPPLIED ON A RUN SHEET IDENTIFYING EACH SEGMENT IN THE RECORDING NUMBER, LOCATION, AND PROJECT NAME IN A MANNER ACCEPTABLE TO THE ENGINEER.

G. INVENTORY. A BRIEF REPORT AND INVENTORY OF ALL RECORDINGS COMPLETED, REFERENCED BY LOCATION AND RECORDING NUMBER, SHALL BE FURNISHED TO THE DEPARTMENT UPON COMPLETION OF THE WORK AND DELIVERY OF THE RECORDINGS. ALL RECORDINGS AND WRITTEN RECORDS SHALL BECOME THE PROPERTY OF THE DEPARTMENT.

THE CONTRACTOR SHALL USE A SURVEY METHOD ACCEPTABLE TO ITS INSURANCE COMPANY. THE CONTRACTOR IS RESPONSIBLE FOR ANY DAMAGE RESULTING FROM DEMOLITION AND CONSTRUCTION ACTIVITIES. IF OWNERS OR OCCUPANTS FAIL TO ALLOW ACCESS TO A PROPERTY FOR THE PRE-CONSTRUCTION SURVEY, SEND A CERTIFIED LETTER TO THE OWNER OR OCCUPANT. MAKE THE NOTIFICATION EFFORT AND THE CERTIFIED LETTER PART OF THE PRE-CONSTRUCTION SURVEY RECORDS. DELIVER A COPY OF THE PRE-CONSTRUCTION SURVEY TO THE ENGINEER BEFORE BEGINNING CONSTRUCTION OPERATIONS AT CRITICAL LOCATIONS. CRITICAL LOCATIONS SHALL INCLUDE, BUT ARE NOT LIMITED TO EXISTING BRIDGES, RETAINING WALLS, UTILITIES, NATIONWIDE CHILDREN'S HOSPITAL AND 340 - 450 EAST FULTON STREET.

SUBMIT DELIVERABLES IN ACCORDANCE WITH CMS ITEM 208.

208, VIBRATION CONTROL AND MONITORING LUMP

VIBRATORY ROLLING RESTRICTION

VIBRATORY ROLLING IS PROHIBITED FROM STATION 890+00.00 TO STATION 897+00.00 ON MOOBERRY STREET, STATION 179+67.62 TO STATION 183+07.00 ON PARSONS AVENUE AND STATION 884+00.00 TO STATION 888+03.31 ON RAMP N1.

EXCAVATION RESTRICTION

THE CONTRACTOR SHALL NOTIFY NATIONWIDE CHILDREN'S HOSPITAL TWO (2) WEEKS BEFORE EXCAVATION ACTIVITIES AT CHILDREN'S HOSPITAL RESEARCH BUILDING #2 AND THE ORTHOPEDIC CENTER. THE DATES WILL NOT BE RESTRICTED.

EXISTING BRICK COMBINATION SEWERS

THE CONTRACTOR SHALL USE EXTREME CAUTION WHERE EXCAVATING OR ADDING CEMENT SUBGRADE OVER UNLINED BRICK SEWERS WITH LESS THAN 5' OF COVER. THE CONTRACTOR IS RESPONSIBLE FOR VERIFYING THE LOCATIONS OF BRICK SEWERS AND IF THEY HAVE BEEN LINED OR NOT.

THE CONTRACTOR SHALL NOT USE VIBRATION OR TAMPING EQUIPMENT OVER OR AROUND BRICK SEWERS. NO EQUIPMENT SHALL BE PARKED OVER A BRICK SEWER, NOR SHALL A BRICK SEWER BE EXPOSED WHEN PERFORMING BLIND TAPS INTO IT.

PAYMENT FOR THIS WORK SHALL INCLUDE ALL LABOR, TOOLS, EQUIPMENT AND MATERIALS REQUIRED TO REMOVE THE EXISTING METER POST AND TO CORE THE PROPOSED METER POST HOLES.

THE DEPARTMENT WILL PAY FOR THE ACCEPTED QUANTITIES AT THE CONTRACT PRICE AS FOLLOWS:
ITEM 202E98100 - REMOVAL MISC.: PARKING METER POST REMOVED, AS PER PLAN
ITEM 690E98000 - SPECIAL-MISC.: METER POST HOLE CORE.

ITEM 611 - 18" CONDUIT, TYPE B, 706.02, AS PER PLAN

THIS ITEM SHALL FOLLOW THE 2016 CMS, ITEM 611 WITH THE FOLLOWING EXCEPTION.

THIS PAY ITEM SHALL SANITARY SEAL THE CONDUIT WITH ASTM C 361 GASKET.

ITEM 611 - 15" CONDUIT, TYPE B, 706.02, AS PER PLAN

THIS ITEM SHALL FOLLOW THE 2016 CMS, ITEM 611 WITH THE FOLLOWING EXCEPTION.

THIS PAY ITEM SHALL SANITARY SEAL THE CONDUIT WITH ASTM C 361 GASKET.

PARKING METER AND POST

ALL PARKING METER HEADS WILL BE INSTALLED AND REMOVED BY THE CITY OF COLUMBUS.

ALL PARKING SIGNING, METER POST REMOVAL, AND POST HOLE CORING IS INCLUDED IN THE TRAFFIC CONTROL PLANS. SEE SHEETS 1323.

THE CONTRACTOR SHALL CONTACT THE PUBLIC SERVICE DEPARTMENT 111 N. FRONT STREET. ((614) 645-7497) NOT LESS THAN 3 BUSINESS DAYS PRIOR TO THE NEED FOR THE METERS TO BE REMOVED. THE CONTRACTOR WILL SUPPLY A PLAN WITH THE LOCATION FOR THE METER HEADS TO BE REMOVED AND/OR IDENTIFY WHAT METER HEADS WILL BE BAGGED. THE CONTRACTOR WILL NEED TO PROVIDE THE DURATION OF THE TIME THE METERS WILL BE OUT OF SERVICE. ONCE FEES ARE PAID FOR REMOVAL OF EACH HEAD AND FOR THE DAILY REVENUE LOSS FOR EACH REMOVED OR BAGGED HEAD, A PERMIT CAN BE ISSUED. ONLY THE CITY CAN REMOVE PARKING METER HEADS AND BAG PARKING METERS. METERS THAT ARE TO BE BAGGED ARE COVERED UNDER ITEM 614 - MAINTAINING TRAFFIC (SEE SHEET 100)

REPLACEMENT OF METER POSTS: THE CONTRACTOR SHALL NOTIFY THE PERMIT OFFICE ((614) 645-7497, FAX (614) 645-1876) AFTER PLACEMENT OF SIDEWALK, FOR CITY MARKING OF PARKING POST LOCATIONS. LOCATIONS WILL BE MARKED WITHIN THE FOLLOWING THREE WORKING DAYS OF NOTICE. THE CONTRACTOR SHALL CORE A THREE (3) INCH DIAMETER HOLE TWELVE (12) INCHES DEEP ON THE PRE-MARKED LOCATION FOR EACH PLANNED METER LOCATION. SLEEVES ARE NOT PERMITTED. CITY WILL INSTALL POST AND PARKING METER HEAD. POSTS ARE PLACED 2 FEET FROM FACE OF CURB.

ASBESTOS NOTIFICATION

A COPY OF THE OHIO ENVIRONMENTAL PROTECTION AGENCY (OEPA) NOTIFICATION OF DEMOLITION AND RENOVATION FORM, PARTIALLY COMPLETED AND SIGNED BY THE BRIDGE OWNER, WILL BE PROVIDED TO THE SUCCESSFUL BIDDER. THE CONTACTOR SHALL COMPLETE THE FORMS AND SUBMIT IT TO THE ADDRESS BELOW AT LEAST TEN (10) WORKING DAYS PRIOR TO THE START OF ANY DEMOLITION AND/OR RENOVATION.

OHIO E.P.A
CENTRAL DISTRICT AIR POLLUTION CONTROL
ATTN: MR. RICHARD FOWLER
D.A.P.C C.D.O
50 WEST TOWN STREET, SUITE 700
COLUMBUS, OHIO 43215
(614) 728-3778
FAX: (614) 728-3898

THE CONTACTOR SHALL PROVIDE A COPY OF THE COMPLETED FORM TO THE ENGINEER. INFORMATION REQUIRED ON THE FORM WILL INCLUDE:

1. THE CONTRACTOR'S NAMES AND ADDRESSES
2. THE SCHEDULE DATES FOR THE START AND COMPLETION OF THE BRIDGE REMOVALS
3. A DESCRIPTION OF THE PLANNED DEMOLITION WORK AND THE METHOD(S) TO BE USED.

A COPY OF THE OEPA FORM IS AVAILABLE FOR INSPECTION AT THE ODOT DISTRICT 6 OFFICE, 400 EAST WILLIAM STREET, DELAWARE, OHIO 43015.

BASIS OF PAYMENT

THE CONTRACTOR SHALL FURNISH ALL FEES, LABOR AND MATERIAL NECESSARY TO COMPLETE AND SUBMIT THE OEPA NOTIFICATION FORM. PAYMENT FOR THIS WORK SHALL BE INCLUDED IN ITEM 202 STRUCTURE REMOVED, OVER 20 FOOT SPAN, AS PER PLAN.

ITEM SPECIAL - ASBESTOS ABATEMENT

STRUCTURE FRA-62-1549 (SFN 2506661) HAS BEEN TESTED FOR ASBESTOS. THE DISTRICT INSPECTED THE STRUCTURE FOR THE PRESENCE OF ASBESTOS AND TOOK SAMPLES FROM THE STRUCTURE. AS A RESULT OF THIS TESTING, 68 SQUARE FEET OF GUARDRAIL CAULKING (STEEL GUARDRAIL TO CONCRETE) WAS FOUND TO CONTAIN GREATER THAN 1 % ASBESTOS (1.2% TO 2.4%) AT ELEVEN LOCATIONS TESTED. THE DISTRICT WILL PROVIDE THE PARTIALLY COMPLETED "OHIO ENVIRONMENTAL PROTECTION AGENCY NOTIFICATION OF DEMOLITION AND RENOVATION" FORM TO THE CONTRACTOR. THE CONTRACTOR SHALL COMPLETE THE REMAINING PORTIONS OF THE "OHIO ENVIRONMENTAL PROTECTION AGENCY NOTIFICATION OF DEMOLITION AND RENOVATION" FORM AND SEND IT TO THE OHIO EPA 10 DAYS PRIOR TO DEMOLITION ACTIVITIES.

WHEN NO LONGER NEEDED TO MAINTAIN TRAFFIC, THE EXISTING STRUCTURE SHALL BE COMPLETELY REMOVED UPON RECEIVING PERMISSION FORM THE ENGINEER. THE USE OF EXPLOSIVES AND HEADACHE BALLS IS NOT PERMITTED.

THIS WORK SHALL INCLUDE ALL MATERIAL, EQUIPMENT, LABOR REQUIRED FOR THE DISPOSAL OF THE ASBESTOS MATERIAL.

THE FOLLOWING QUANTITY HAS BEEN INCLUDED IN THE GENERAL SUMMARY FOR USE AT THE LOCATIONS NOTED ABOVE.

ITEM 690E70120 SPECIAL ASBESTOS ABATEMENT 68 SQ FT

FRA-70-14.54

ms consultants, inc.

PLOT.CEL

ms consultants, inc.
msconsultants.com

Ohio DOT Workspace
70\71 East Interchange 2E
www.msconsultants.com

1"
0.5"
0

PDF: ohdot\Bi
PDF: 60-06634_2E_Columbus

Batchplot Spec: \\msconsultants.com\files\production\03\60\06634_2E\standards\plotdrv\batchplt.spc
Pen Table: \\msconsultants.com\files\Standards\usth\ohdot\V8i\ms\plotting\pen\V8i_ms_std.tbl
Plot Driver: \\msconsultants.com\files\Standards\usth\ohdot\v8i\ms\plotting\PDF.pltcfg

34" x 22"

Model: Sheet
Printed: 6/19/2018 @ 7:57:45 AM
File: N:\03\60\06634_2E\roadway\sheets\105226GN01.dgn
View: FENCE_VIEW1
By: jdouglas

ITEM 202 - REMOVAL MISC.: BRICK PAVERS REMOVED AND SALVAGED

THIS ITEM SHALL CONSIST OF REMOVAL, SALVAGE AND DELIVERY OF THE EXISTING BRICK PAVERS FROM THE CITY STREETS. BRICK INDICATED FOR REMOVAL SHALL BE CAREFULLY REMOVED FROM THE ROADWAY WITHOUT UNNECESSARY DAMAGE AND CLEANED. UNDAMAGED BRICK PAVERS SHALL BE STACKED ON PALLETS NO MORE THAN 3' HIGH, SECURELY WRAPPED AND DELIVERED TO THE CITY OF COLUMBUS DIVISION OF ASSET MANAGEMENT, 1850 E. 25TH AVE. MAINTENANCE YARD. CONTACT TIM BAKER AT (614) 645-7458 AT LEAST TWO (2) WEEKS PRIOR TO DELIVERY.

COST OF BRICK REMOVAL, SALVAGE AND DELIVERY IS INCLUDED IN THE UNIT PRICE BID FOR ITEM 202 - REMOVAL MISC.: BRICK PAVERS REMOVED AND SALVAGED.

202E98300 - REMOVAL MISC.: BRICK PAVERS - 100 SQ YD
REMOVED AND SALVAGED

ITEM SPECIAL - BOLLARD

THE BOLLARDS PROTECTING THE TRANSFORMERS AND SWITCHES AT THE PROSED ITS BUILDING ALONG PARSONS AVENUE SHALL BE THE REMOVAL BOLLARDS PER ODOT'S SCD RM-5.1.

PROTECTION OF EXISTING FIBER OPTIC CABLES

EXISTING ODOT AND CTSS FIBER OPTIC CABLES AND CONDUIT FACILITIES MUST BE MAINTAINED DURING ALL PHASES OF CONSTRUCTION. WHERE EXCAVATION OR OTHER WORK MAY AFFECT AREAS IN CLOSE PROXIMITY (LESS THAN 3 FT HORIZONTAL DISTANCE) TO THESE FACILITIES, THE CONTRACTOR MUST EXPOSE, MAINTAIN AND PROTECT THESE FACILITIES USING CONSTRUCTION METHODS APPROVED BY THE ENGINEER. PAYMENT FOR THE ABOVE SHALL BE INCIDENTAL TO THE COST OF THE EXCAVATION OR OTHER WORK ITEM INVOLVED.

ITEM 607 FENCE, TYPE CL, AS PER PLAN

THE CONTRACTOR SHALL INSTALL CHAIN LINK FENCING AT THE LOCATIONS IDENTIFIED IN THE PLANS. THE FENCING SHALL MEET THE REQUIREMENTS OF OHIO DEPARTMENT OF TRANSPORTATION STANDARD CONSTRUCTION DRAWING F-1.1, WITH THE FOLLOWING MODIFICATIONS:

- THE FENCE SHALL BE 72 INCHES TALL.
- ALL WIRE FABRIC, POSTS AND ACCESSORIES WILL BE GALVANIZED AND PVC COATED. THE PVC COATING SHALL BE BLACK IN COLOR, CLOSELY APPROACHING FEDERAL STANDARD NO. 27038.

ALL PVC FABRIC AND POSTS SHALL BE HANDLED WITH CARE. IF THE PVC COATING IS DAMAGED, THE CONTRACTOR SHALL REPLACE THE DAMAGED ITEM OR REPAIR THE PVC COATING AS DIRECTED BY THE ENGINEER AT NO COST TO THE DEPARTMENT.

THIS WORK SHALL INCLUDE ALL MATERIALS, LABOR AND EQUIPMENT NECESSARY TO INSTALL THE FENCING AND SHALL BE PAID FOR UNDER THE UNIT BID PRICE FOR:

ITEM 607 FENCE, TYPE CL, AS PER PLAN (FT)

ITEM 607 - GATE, TYPE CL, AS PER PLAN

THE CONTRACTOR SHALL INSTALL A CHAIN LINK GATE AT THE LOCATION IDENTIFIED IN THE PLANS. THE GATE SHALL MEET THE REQUIREMENTS OF OHIO DEPARTMENT OF TRANSPORTATION STANDARD CONSTRUCTION DRAWING F-1.1, WITH THE FOLLOWING MODIFICATIONS:

- THE GATE SHALL BE 72 INCHES TALL.
- ALL WIRE FABRIC, POSTS AND ACCESSORIES WILL BE GALVANIZED AND PVC COATED. THE PVC COATING SHALL BE BLACK IN COLOR, CLOSELY APPROACHING FEDERAL STANDARD NO. 27038.

ALL PVC FABRIC AND POSTS SHALL BE HANDLED WITH CARE. IF THE PVC COATING IS DAMAGED, THE CONTRACTOR SHALL REPLACE THE DAMAGED ITEM OR REPAIR THE PVC COATING AS DIRECTED BY THE ENGINEER AT NO COST TO THE DEPARTMENT.

THIS WORK SHALL INCLUDE ALL MATERIALS, LABOR AND EQUIPMENT NECESSARY TO INSTALL THE GATE AND SHALL BE PAID FOR UNDER THE UNIT BID PRICE FOR:

ITEM 607 GATE, TYPE CL, AS PER PLAN (EA)

ITEM 202 - REMOVAL, MISC.: CONSTRUCTION DEBRIS REMOVED, AS PER PLAN

THERE ARE EXISTING AREAS WITHIN THE I-70/I-71 EAST INTERCHANGE THAT CONTAIN CONSTRUCTION DEBRIS INCLUDING REINFORCED CONCRETE PAVEMENT AND POSSIBLY OTHER DEBRIS OF A SIMILAR NATURE. THE CONSTRUCTION DEBRIS AREAS HAVE BEEN LOCATED IN THE PLANS BASED ON RECORD INFORMATION, AND THE ACTUAL AREAS MAY BE LARGER OR SMALLER THAN SHOWN. SEE SHEETS 576-578 FOR MAP OF KNOWN CONSTRUCTION DEBRIS AREAS. THE CONSTRUCTION DEBRIS SHALL BE REMOVED AND DISPOSED OF BY THE CONTRACTOR PER ITEM 202.05 OF ODOT'S CONSTRUCTION AND MATERIAL SPECIFICATIONS.

ALL WORK ASSOCIATED WITH THE REMOVAL AND DISPOSAL OF THE CONSTRUCTION DEBRIS WILL BE PAID FOR PER CUBIC YARD. AS ITEM 202 - REMOVAL MISC.: CONSTRUCTION DEBRIS REMOVED, AS PER PLAN.

ITEM 202 - REMOVAL MISC.: CONSTRUCTION DEBRIS REMOVED AS PER PLAN

ALIGNMENT	BEGIN STATION	END STATION	REMOVAL MISC.: CONSTRUCTION DEBRIS REMOVED AS PER PLAN (CY)
I-70	783+50.00	787+43.90	20,996
I-70	788+96.68	794+50.00	3,008
I-70	799+50.00	800+50.00	12
TRANS 70WB (EAST SIDE)	219+21.11	223+93.45	6,224
TRANS 71SB (EAST SIDE)	215+00.00	216+50.00	451
TRANS 71SB (EAST SIDE)	218+50.00	225+00.00	4,583
RAMP N3	887+00.00	887+00.00	2
RAMP N4	789+50.00	789+90.02	7
TRANS N4	690+00.00	692+50.00	2,063
RAMP Q3	889+00.00	893+00.00	3,741
PARSONS	183+74.86	184+50.00	35
TRANS PARSONS	85+00.00	86+90.27	1,721
		TOTAL	42,843

ITEM SPECIAL - BENCH

THIS ITEM SHALL CONSIST OF FURNISHING AND INSTALLING BENCHES IN ACCORDANCE WITH THE CITY OF COLUMBUS DOWNTOWN STREETSCAPE STANDARDS ITEM 5.12.

THE LOCATION OF THE BENCHES ARE INTENDED TO BE AT THE AT THE NW CORNER OF THE FULTON STREET & FOURTH STREET INTERSECTION HOWEVER THE SPECIFIC LOCATION SHALL BE DETERMINED BY THE CITY OF COLUMBUS PUBLIC SERVICE DEPARTMENT AT THE TIME OF INSTALLATION. CONTACT THE ENGINEER 5 WORKING DAYS PRIOR TO INSTALLATION FOR COORDINATION OF THE INSTALLATION LOCATION.

BENCHES SHALL BE VICTOR STANLEY MODEL RB-28 WITH INTERMEDIATE ARMRESTS OR APPROVED EQUAL. THE BENCHES SHALL BE FINISHED WITH A BLACK POLYESTER POWDER COATING. PERMANENTLY INSTALL BENCHES ON PAVEMENT/SIDEWALK PER MANUFACTURER'S INSTRUCTIONS. ALL MOUNTING BOLTS SHALL BE STAINLESS STEEL.

THE WORK SHALL INCLUDE ALL TOOLS, LABOR AND MATERIALS NECESSARY, INCLUDING ANCHORING DEVICES, TO SUCCESSFULLY INSTALL THE BENCHES.

THE FOLLOWING ESTIMATED QUANTITIES HAVE BEEN INCLUDED IN THE GENERAL SUMMARY.

ITEM SPECIAL - BENCH 2 EACH

CALCULATED TAZ
CHECKED JSS

GENERAL NOTES

FRA-70-14.54

ms consultants, inc.

PLOT.CEL

ms consultants, inc.
msconsultants.com

www.msconsultants.com

Ohio DOT Workspace
70\71 East Interchange 2E

1"
0.5"
0

Batchplot Spec: \\msconsultants.com\files\production\03\60\06634_2E\standards\plotdrv\batchplt.spc
Pen Table: \\msconsultants.com\files\Standards\astm\ohdot\V8i\ms\plotting\pen\V8i_ms_std.tbl
Plot Driver: \\msconsultants.com\files\Standards\astm\ohdot\v8i\ms\plotting\PDF.pltcfg
PDF: ohdotV8i
PDF: 60-06634_2E_Columbus

34" x 22"

Model: Sheet
Printed: 6/19/2018 @ 7:57:46 AM
File: N:\03\60\06634_2E\roadway\sheets\05322GN05.dgn
View: FENCE_VIEW1
By: jdouglas

CITY OF COLUMBUS SUPPLEMENTAL SPECIFICATION 1524
ROADWAY PAVERS MAY 8, 2014

1524.01 GENERAL
1524.01.0 DESCRIPTION OF THE WORK: THIS SPECIFICATION COVERS THE INSTALLATION OF NEW ROADWAY UNIT PAVERS WHERE UNIT PAVERS ARE USED IN VEHICULAR TRAFFIC AREAS.
1524.01.2 WORK IN THIS SECTION: THIS WORK INCLUDES FURNISHING AND INSTALLATION OF PORTLAND CEMENT CONCRETE (PCC) BASE, FILTER FABRIC, TACK COAT, BITUMINOUS SETTING BED, NEOPRENE ADHESIVE, UNIT PAVERS, JOINT SAND, JOINT SAND STABILIZER.
1524.01.3 WORK IN OTHER SECTIONS: CMSC ITEMS 204 AND 304.

1524.02 APPLICABLE STANDARDS
1524.02.1 ASTM (CURRENT STANDARDS):
A. C29 STANDARD TEST METHOD FOR BULK DENSITY (UNIT WEIGHT) AND VOIDS IN AGGREGATE.
B. C33 STANDARD SPECIFICATION FOR CONCRETE AGGREGATES.
C. C67 STANDARD TEST METHOD FOR SAMPLING AND TESTING BRICK AND STRUCTURAL CLAY TILE.
D. C136 STANDARD TEST METHOD FOR SIEVE ANALYSIS OF FINE AND COARSE AGGREGATES.
E. C140 STANDARD TEST METHODS FOR SAMPLING AND TESTING CONCRETE MASONRY UNITS AND RELATED UNITS.
F. C144 STANDARD SPECIFICATION FOR AGGREGATE FOR MASONRY MORTAR.
G. C936 STANDARD SPECIFICATION FOR SOLID CONCRETE INTERLOCKING PAVING UNITS.
H. C979 STANDARD SPECIFICATION FOR PIGMENTS FOR INTEGRALLY COLORED CONCRETE.
I. C1272 STANDARD SPECIFICATION FOR HEAVY VEHICULAR PAVING BRICK.
J. D698 STANDARD TEST METHODS FOR LABORATORY COMPACTION CHARACTERISTICS OF SOIL USING STANDARD EFFORT (12,400 FT LBF/FT3 (600 KN M/M3)).
K. D1557 STANDARD TEST METHODS FOR LABORATORY COMPACTION CHARACTERISTICS OF SOIL USING MODIFIED EFFORT (56,000 FT LBF/FT3 (2,700 KN M/M3)).
L. D2940 STANDARD SPECIFICATION FOR GRADED AGGREGATE MATERIAL FOR BASES OR SUBBASES FOR HIGHWAYS OR AIRPORTS.

1524.02.2 AASHTO (CURRENT STANDARDS): AASHTO M 320 STANDARD SPECIFICATION FOR PERFORMANCE-GRADED ASPHALT BINDER.

1524.02.3 CITY OF COLUMBUS CMS (CMSC): CMSC ITEMS: 305, 407, 703.05 AND 712.09.

1524.02.4 MANUFACTURER'S INSTALLATION SPECIFICATIONS: MANUFACTURER'S INSTALLATION SPECIFICATIONS SHALL BE ADHERED TO FOR ALL MATERIALS SPECIFIED HEREIN UNLESS OTHERWISE SPECIFIED IN THE PROJECT PLANS.

1524.03 SUBMITTAL REQUIREMENTS
1524.03.1 MANUFACTURERS' INFORMATION: SHALL INCLUDE PRODUCT INFORMATION, TEST RESULTS, INSTALLATION INSTRUCTIONS AND MSDS DATA FOR THE FOLLOWING.
A. FILTER FABRIC.
B. TACK COAT.
C. BITUMINOUS SETTING BED.
D. NEOPRENE MODIFIED ASPHALT ADHESIVE.
E. CLAY PAVERS.
F. CONCRETE PAVERS.
G. POLYMERIC JOINT SAND.
H. BULK NATURAL JOINT SAND.
I. LIQUID-APPLIED JOINT SAND STABILIZER.
J. TEMPORARY EDGE RESTRAINT (PAVERS) DURING PART WIDTH CONSTRUCTION.

THE CONTRACTOR SHALL NOT START WORK UNTIL MANUFACTURERS' INFORMATION AND SAMPLES HAVE BEEN APPROVED BY THE ENGINEER. QUALITY CONTROL TESTS AS APPLICABLE SHALL BE SUBMITTED TO THE ENGINEER WITHIN 5 DAYS OF UNDERTAKING THE RESPECTIVE TEST.

1524.03.2 SAMPLES
A. PAVERS (CLAY AND/OR CONCRETE) 20-EACH OR AS DIRECTED BY THE ENGINEER.
B. JOINT SAND (50-LB BAG OF BULK SAND AND/OR ONE (1) BAG OF POLYMERIC SAND BASED ON CONTRACTOR'S MATERIAL SELECTION).

1524.03.3 TEST REPORTS FOR QUALITY CONTROL:
A. BRICK PAVER TEST RESULTS OR CERTIFICATION FROM/OF EACH BATCH (100,000 UNITS OR ANY PART THEREOF) THAT EACH BATCH SUPPLIED IS COMPLIANT WITH ASTM C1272.
B. CONCRETE PAVER TEST RESULTS OR CERTIFICATION FROM/OF EACH BATCH (100,000 UNITS OR ANY PART THEREOF) THAT EACH BATCH SUPPLIED IS COMPLIANT WITH ASTM C936.
C. JOINT SAND GRADATION REPORT FROM/OF EACH BATCH (20 TONS OR ANY PART THEREOF) THAT EACH BATCH SUPPLIED IS COMPLIANT WITH ASTM C144.

1524.04 MATERIALS
1524.04.1 PORTLAND CEMENT CONCRETE BASE: SHALL MEET THE REQUIREMENTS OF CMSC ITEM 305 EXCEPT AS SPECIFIED IN THE PROJECT PLANS AND SPECIFICATIONS.
1524.04.2 FILTER FABRIC: WOVEN OR NON-WOVEN GEOTEXTILE FABRIC SHALL MEET THE REQUIREMENTS OF CMSC ITEM 712.09, TYPE D, EXCEPT AS SPECIFIED IN THE PROJECT PLANS AND SPECIFICATIONS.
1524.04.3 TACK COAT: COMPLY WITH CMSC ITEM 407.
1524.04.4 BEDDING SAND: (NOT PERMITTED ON ROADWAYS IN THE CITY OF COLUMBUS).
1524.04.5 BITUMINOUS SETTING BED:
A. ASPHALT BINDER SHALL BE PG 64-22 ASPHALT BINDER CONFORMING TO AASHTO M320.
B. AGGREGATE SHALL BE MANUFACTURED SAND AND SHALL MEET THE REQUIREMENTS OF CMSC ITEM 703.05. IT SHALL BE COMPOSED OF HARD, TOUGH, DURABLE, UNCOATED PARTICLES, FREE FROM CLAY, SILT, ORGANIC MATERIAL OR OTHER DELETERIOUS SUBSTANCES. THE AGGREGATE SHALL HAVE VERIFIABLE HISTORY OF BEING RESISTANT TO STRIPPING. AN ANTI-STRIPPING AGENT SHALL BE USED AS NECESSARY.
C. THE MIX SHALL BE APPROXIMATELY 6 PERCENT ASPHALT BINDER BY WEIGHT WITH 94 PERCENT AGGREGATE. THE SUPPLIER SHALL DETERMINE THE EXACT PROPORTIONS TO ACHIEVE THE BEST MIX TO SUIT THE MATERIALS AND THE SITE AND INSTALLATION CONDITIONS.
D. THE MINIMUM BITUMINOUS SETTING BED TEMPERATURE DURING PLACEMENT SHALL BE 250 DEGREES F. BITUMINOUS SETTING BED SHALL NOT BE PLACED WHEN AMBIENT TEMPERATURE IS BELOW 40 DEGREES F.

1524.04.6 NEOPRENE MODIFIED ADHESIVE: FURNISH NEOPRENE MODIFIED ASPHALT ADHESIVE THAT CONTAINS 2% NEOPRENE GRADE WMI OXIDIZED ASPHALT WITH A 150-DEGREE F SOFTENING POINT (77 PENETRATION) 10% LONG FIBERIZED INERT MATERIAL, OR APPROVED EQUAL.

1524.04.7 PAVERS:
A. CLAY PAVERS SHALL MEET THE REQUIREMENTS OF ASTM C1272, TYPE F, APPLICATION PX.
B. CONCRETE PAVERS SHALL MEET THE REQUIREMENTS OF ASTM C936.
C. EFFLORESCENCE SHALL NOT BE A CAUSE FOR REJECTION
D. SIZE - ALL PAVERS SHALL HAVE A 2:1 MODULE OF PLAN DIMENSION, AND SHALL MEASURE 8 IN. BY 4 IN. (PLUS OR MINUS 10 PERCENT). WHEN SIXTEEN PAVERS ARE LINED UP END TO END ADJACENT TO 32 PAVERS LINED UP SIDE BY SIDE, THE OVERALL LENGTH OF EACH ROW SHOULD NOT DIFFER BY MORE THAN 1 IN; EXCEPT WHERE DIMENSIONAL SIZE AND SHAPE ARE SPECIFIED IN THE PLANS.
E. LUGS - ALL PAVERS SHALL HAVE SPACING LUGS UNLESS OTHERWISE SPECIFIED IN THE PLANS. LUGS SHALL BE LOCATED ON AT LEAST ONE SIDE AND ONE END.
F. CHAMFERS - ALL PAVERS SHALL HAVE CHAMFERED TOP EDGES UNLESS OTHERWISE SPECIFIED IN THE PLANS.
G. NO MORE THAN 2 PERCENT OF THE INSTALLED PAVERS SHALL EXHIBIT ANY CHIPPING, AND NO MORE THAN 10 PERCENT OF ANY EDGE SHALL BE CHIPPED.

1524.04.8 JOINT FILLING SAND:
A. AS SPECIFIED IN THE PROJECT PLANS, THE GRADATION FOR JOINTING SAND SHALL EITHER BE: 1) BULK NATURAL SAND MEETING ASTM C144 OR, 2) POLYMERIC MANUFACTURED SAND MEETING THE GRADATION REQUIREMENTS OF ASTM C144. ASTM C33 (CONCRETE SAND) SHALL ONLY BE USED AS SPECIFIED IN THE PROJECT PLANS.
B. POLYMERIC SAND SELECTION SHALL BE OF THOSE ON THE CITY OF COLUMBUS, OHIO APPROVED PRODUCER/PRODUCTS LIST.

1524.04.9 JOINT SAND STABILIZER: ALL SAND JOINTS SHALL BE STABILIZED USING ONE OF THE FOLLOWING METHODS UNLESS CALLED OUT OTHERWISE IN THE PLANS.
A. POLYMERIC SAND - POLYMERIC JOINT SAND SHALL CONSIST OF A FACTORY PREPARED MIXTURE OF MANUFACTURED SAND AND MOISTURE ACTIVATED POLYMER THAT BINDS THE SAND PARTICLES TOGETHER.
B. LIQUID APPLIED STABILIZER - WHEN USED, THE STABILIZER SHALL BE A LIQUID-APPLIED EPOXY RESIN OR POLYURETHANE RESIN PRODUCT, CAPABLE OF PENETRATING THE JOINT SAND PRIOR TO POLYMERIZATION. IT SHALL SEAL THE TOP SURFACE OF THE PAVER WITHOUT CAUSING DISCOLORATION, A NOTICEABLE SHEEN OR CAUSE THE COEFFICIENT OF FRICTION TO BE REDUCED. THE STABILIZER SHALL BE APPLIED IN ACCORDANCE WITH MANUFACTURER'S INSTRUCTIONS AND AT A RATE THAT WILL ACHIEVE BONDING OF THE SAND PARTICLES TO A MINIMUM DEPTH OF 1/2 IN. LIQUID-APPLIED STABILIZER SHALL NOT BE APPLIED IF RAIN IS FORECAST WITHIN 12-HOURS OF APPLICATION.

1524.05 EXECUTION - CONSTRUCTION REQUIREMENTS
1524.05.1 PREPARATION:
A. SUBGRADE - PREPARE IN ACCORDANCE WITH CMSC ITEM 204.
B. AGGREGATE BASE - INSTALL IN ACCORDANCE WITH PLANS AND CMSC ITEM 304.

1524.05.2 CONCRETE BASE
A. JOINTS; CONSTRUCTION, LONGITUDINAL, EXPANSION, CONTROL, TIE BARS, DOWELS AND REINFORCEMENT, IN ACCORDANCE WITH ITEM 305, UNLESS OTHERWISE SPECIFIED. TRAVERSE CONTROL JOINTS SHALL BE SPACED AT 10-FEET INTERVALS, WHERE CURB EXIST, TRAVERSE JOINTS SHALL BE COINCIDENT WITH THE CURB CONTROL JOINTS UNLESS OTHERWISE SPECIFIED IN THE PROJECT PLANS.
B. PORTLAND CEMENT CONCRETE BANDS SHALL BE INSTALLED AS PAVER RESTRAINT WHEREVER PAVERS TERMINATE ADJACENT TO FLEXIBLE PAVEMENT OR ANY NON-RIGID SURFACE.
C. IF PARTIAL WIDTH PAVEMENT IS INSTALLED TO MAINTAIN TRAFFIC, THE NEW PAVER PAVEMENT SHALL BE RESTRAINED AGAINST LATERAL MOVEMENT PRIOR TO ALLOWING TRAFFIC ON THE NEW PAVERS. LATERAL RESTRAINT SHALL BE PROVIDED BY ANGLE IRON SECURED SOUNDLY AND TIGHT AGAINST NEW PAVERS OR BY CONTRACTOR MEANS AND METHODS PREVIOUSLY APPROVED BY THE ENGINEER.
D. CONCRETE BASE SHALL HAVE DRAINAGE WEEP HOLES PLACED AS SPECIFIED IN THE PROJECT PLANS.
E. CONCRETE BASE FINISHED SURFACE TOLERANCE SHALL MEET PLAN GRADING REQUIREMENTS WITHIN (+/-) 1/4 IN. AS MEASURED WITH A STRING LINE, STRAIGHT EDGE, OR LASER AS APPLICABLE. WORK NOT MEETING SPECIFIED TOLERANCE SHALL BE REMEDIED BY CONTRACTOR SUBMITTED CORRECTIVE MEASURES APPROVED BY THE ENGINEER.
F. WHERE ROADWAY PAVERS ARE PLACED ADJACENT TO ADJOINING FLEXIBLE PAVEMENT, OR ANY OTHER FLEXIBLE MATERIALS (E.G., SOIL), A CONCRETE COLLAR MINIMUM 12-INCHES WIDE SHALL BE PROVIDED AT THE END OF THE PAVER WORK ADJACENT TO THE ADJOINING FLEXIBLE MATERIAL WITH SURFACE ELEVATION COINCIDENT/ FLUSH WITH THE FINISHED ROADWAY PAVERS AND ADJOINING FLEXIBLE PAVEMENT/MATERIAL. CONCRETE COLLAR SHALL BE CAST INTEGRAL WITH THE CONCRETE BASE OR AS SPECIFIED IN THE PLANS. ADDITIONALLY, ALL ROADWAY CASTINGS WHERE PAVERS ABUT, SHALL HAVE A MINIMUM 8-INCH CONCRETE COLLAR BOXED OUT (SQUARE OR RECTANGULAR) AROUND THE CASTING TO INCLUDE, BUT NOT LIMITED TO STORM INLETS, MANHOLES, WATER VALVES, AND ETC.

1524.05.3 SEQUENCING:
ALL TEMPORARY AND PERMANENT EDGE RESTRAINTS, DRAINAGE WEEP HOLES, MANHOLE AND UTILITY COVERS, AND OTHER SURFACE PENETRATIONS SHALL BE COMPLETED BEFORE INSTALLATION OF THE PAVERS.

1524.05.4 GEOTEXTILE: INSTALL FILTER FABRIC AS SPECIFIED ON WEEP HOLE EXECUTION (SEE DETAILED DWG. IN PLANS AS APPLICABLE).

1524.05.5 TACK COAT: APPLY IN ACCORDANCE WITH CMSC ITEM 407.

1524.05.6 BITUMINOUS SETTING BED:
A. BITUMINOUS SETTING BED SHALL BE PLACED 3/4 IN. THICK (+/- 1/4 IN.). THE BED THICKNESS SHALL BE ADJUSTED SO THAT WHEN THE PAVERS ARE SET ON THE ADHESIVE LAYER, THEIR TOP SURFACE WILL BE 1/8 IN. ABOVE THE REQUIRED GRADES.
B. REMOVE MATERIALS THAT HAVE COOLED BELOW 175 DEGREES F THAT ARE NOT SUFFICIENTLY COMPACTED.

1524.05.7 NEOPRENE ADHESIVE:
A. APPLY NEOPRENE ADHESIVE IN ACCORDANCE WITH MANUFACTURER'S RECOMMENDATIONS. WORK ADHESIVE ONTO THE SETTING BED SO AS TO PROVIDE A COMPLETE AND ADEQUATE BOND.
B. ALLOW SUFFICIENT TIME FOR THE ADHESIVE TO BECOME TACKY AND SKIN OVER BEFORE INSTALLING THE PAVERS.
C. OLD ADHESIVE NOT COVERED IN THE PREVIOUS DAY SHOULD BE SCRAPED OFF THE SETTING BED PRIOR TO APPLYING NEW ADHESIVE.

1524.05.8 PAVERS:
A. INSTALL PAVERS TIGHT IN ACCORDANCE WITH THE PLAN SPECIFIED PATTERN.
B. USE PAVERS FROM AT LEAST TWO PACKS OF EACH COLOR AT ANY ONE TIME. FOLLOW THE MANUFACTURER'S RECOMMENDATIONS ON COLOR BLENDING.
C. ADJUST TO FORM UNIFORM JOINT WIDTHS AND STRAIGHT PATTERN LINES AFTER EVERY 5 FT. OF PROGRESS. THE JOINT WIDTH SHALL BE BETWEEN 1/16 IN. AND 3/16 IN. AND NO MORE THAN ONE-THIRD OF THE JOINTS SHALL BE GREATER THAN 1/8 IN. WIDE IN ANY ONE SQUARE YARD AREA. THE MAXIMUM DEVIATION FROM A 30 FT. STRING LINE SHALL BE +/- 1/4 IN. JOINT WIDTHS WILL TAKE PRECEDENCE OVER ALIGNMENT.
D. ALL CUT PAVERS SHALL BE CUT BY MASONRY SAWS IN SUCH A MANNER THAT NO PAVER SEGMENT IS SMALLER THAN ONE THIRD OF A FULL PAVER WHEN THE CUT LINE CROSSES A LONG SIDE AND NO SMALLER THAN ONE HALF OF A FULL PAVER WHEN THE CUT LINE CROSSES BOTH ENDS. THE CUT FACES SHALL BE VERTICAL.
E. AFTER A SUITABLE AREA OF PAVERS HAS BEEN INSTALLED EACH DAY, THE PAVERS HAVE BEEN ALIGNED, CUT PAVERS HAVE BEEN POSITIONED AND PRIOR TO FINAL SET OF THE ADHESIVE, ROLL THE SURFACE OF THE PAVERS TO SET THE PAVERS INTO PLACE WITH SUFFICIENT PRESSURE TO ACHIEVE A FULL BOND TO THE SETTING BED.
F. TEMPORARY EDGE RESTRAINTS METHODOLOGY SHALL BE PROPOSED TO THE ENGINEER AS A PRE-CONSTRUCTION SUBMITTAL "SHOP DRAWING" (SEE SECTION 1524.03). PROPOSED TEMPORARY PAVER RESTRAINT METHODOLOGY SHALL BE APPROVED BY THE ENGINEER PRIOR TO IMPLEMENTATION.

CALCULATED TAZ
CHECKED JSS

GENERAL NOTES

FRA-70-14.54

ms consultants, inc.

PLOT.CEL

ms consultants, inc.
msconsultants.com

www.msconsultants.com

Ohio DOT Workspace
70\71 East Interchange 2E

1"
0.5"
0

PDF: ohdot\V8i
PLOT: 60-06634_2E_Columbus

Batchplot Spec: \\msconsultants.com\files\production\03\60\06634_2E\standards\plotdir\batchplt.spc
Pen Table: \\msconsultants.com\files\Standards\ustn\ohdot\V8\ms\plotting\pen\V8i_ms_std.tbl
Plot Driver: \\msconsultants.com\files\Standards\ustn\ohdot\v8i\ms\plotting\PDF.pltcfg

34" x 22"

View FENCE_VIEW1
By: jdouglas

Model: Sheet
Printed: 6/19/2018 @ 7:57:48 AM
File: N:\03\60\06634_2E\roadway\sheets\1053220N016.dgn

CITY OF COLUMBUS SUPPLEMENTAL SPECIFICATION 1524-CONT'D

1524.05.9 JOINT SAND:

A. SWEEP DRY JOINTING SAND OVER THE SURFACE OF THE PAVERS SO THAT IT PENETRATES INTO THE JOINTS AND SECURES THE PAVERS. REMOVE ALL SURPLUS SAND IMMEDIATELY SO THAT ALL PARTICLES ARE REMOVED FROM THE CHAMFERS AND SURFACE OF THE PAVERS.

B. ADDITIONAL ROLLING SHALL BE UNDERTAKEN TO SETTLE THE SAND, ADDING ADDITIONAL SAND AS NECESSARY. PAVER JOINTS SHALL BE COMPLETELY FILLED WITH SPECIFIED SAND TO THE BOTTOM OF BRICK PAVER CHAMFERS (OR 1/8 IN. BELOW TOP OF PAVER).

C. ON COMPLETION OF ROLLING, BEFORE AND AFTER JOINT FILLING, SURFACE TOLERANCES SHALL BE WITHIN 1/8 IN. UNDER A 10 FT. STRAIGHT EDGE AND 1/8 IN. HIGH TO FLUSH WITH THE FINISHED ELEVATION OF ADJACENT FEATURES. THERE SHALL NOT BE A DIFFERENCE IN ELEVATION BETWEEN ADJACENT UNITS OF GREATER THAN 1/16 IN. ELEVATIONS SHOULD BE SUCH THAT NO WATER PONDS ON THE SURFACE.

D. PROTECT JOINT SAND AGAINST MOISTURE UNTIL THE ACTIVATING THE POLYMERIC SAND OR JOINT SAND STABILIZER IS APPLIED.

1524.05.10 JOINT SAND STABILIZATION:

A. THE SURFACE OF THE PAVEMENT SHALL BE MADE CLEAN AND FREE FROM OIL, LAITANCE, DUST AND ANY LOOSE MATERIAL PRIOR TO ACTIVATING THE POLYMERIC SAND OR THE APPLICATION OF LIQUID JOINT SAND STABILIZER.

B. WHEN POLYMERIC SAND IS USED, ACTIVATE THE POLYMER BY MISTING THE SURFACE OF THE PAVERS WITH WATER IN ACCORDANCE WITH THE MANUFACTURER'S INSTRUCTIONS.

C. WHEN LIQUID-APPLIED JOINT SAND STABILIZER IS USED, APPLY WITH SPRAY EQUIPMENT TO ACHIEVE A UNIFORM COVERAGE IN ACCORDANCE WITH THE MANUFACTURER'S INSTRUCTIONS. WORK THE MATERIAL INTO THE JOINTS USING NEOPRENE SQUEEGEES, ENSURING THAT THE CHAMFERS ARE FLOODED AND NO SURPLUS MATERIAL IS LEFT ON THE SURFACE OF THE PAVERS. CONTINUE TO FLOOD OF THE CHAMFERS AND TO SQUEEGEE THE SURFACE UNTIL THE STABILIZER CEASES TO SOAK INTO THE JOINT SAND.

D. VERIFY THAT THE BONDING THE SAND PARTICLES HAS OCCURRED TO A DEPTH OF AT LEAST 1/2 IN. WHERE THE APPLICATION RESULTS IN A PATCHY SHEEN THE STABILIZER SHALL BE REACTIVATED AND WORKED AS NECESSARY TO PRODUCE AN EVEN APPEARANCE.

1524.06 QUALITY ASSURANCE AND CONTROL
1524.06.1 QUALITY ASSURANCE: THE CONTRACTOR SHALL PREPARE AND SUBMIT A METHOD STATEMENT TO INDICATE THE PROPOSED STARTING POINTS, DIRECTION OF OPERATIONS AND PROGRESS OF WORKS, THE INSTALLATION METHODS, THE PATTERN DIMENSIONAL CONTROLS TO BE USED, THE MEASURES FOR PROTECTING THE WORK, THE QUALITY CONTROL PROCEDURES TO BE ADOPTED, AND THE PERSONNEL AND EQUIPMENT TO BE KEPT ON SITE AT ALL TIMES.

1524.06.2 QUALITY CONTROL:

A. FIRST 50-FEET OF PROJECT PAVEMENT TO BE INSTALLED AS TEST SECTION (MOCKUP), BALANCE OF PAVEMENT PLACED ON PROJECT SHALL MEET OR EXCEED TEST PAVEMENT.

B. MATERIALS AND COMPLETED WORK FAILING TO MEET THE SPECIFIED REQUIREMENTS SHALL BE REMOVED FROM SITE AND REPLACED TO A SUITABLE STANDARD.

1524.07 METHOD OF MEASUREMENT
1524.07.1 CONCRETE BASE: ODOT WILL MEASURE CONCRETE BASE (INCLUDING WEEP HOLES AND FILTER FABRIC) UNDER BRICK PAVERS BY THE NUMBER OF SQUARE YARDS COMPLETED AND ACCEPTED IN PLACE. THE WIDTH EQUALS THE BASE WIDTH SHOWN IN THE TYPICAL CROSS-SECTION OF THE PLANS PLUS ADDITIONAL WIDENING AS THE ENGINEER DIRECTS IN WRITING. ODOT WILL FIELD MEASURE THE LENGTH ALONG THE CENTERLINE OF THE ROADWAY OR RAMP.

1524.07.2 BRICK PAVERS: ODOT WILL MEASURE PAVERS (INCLUDING TACK COAT, BITUMINOUS SETTING BED, PAVERS, JOINT SAND, AND/OR JOINT SAND STABILIZER) BY THE NUMBER OF SQUARE YARDS COMPLETED AND ACCEPTED IN PLACE. THE WIDTH EQUALS THE SURFACE WIDTH SHOWN IN THE TYPICAL CROSS-SECTION OF THE PLANS PLUS ADDITIONAL WIDENING AS THE ENGINEER DIRECTS IN WRITING. ODOT WILL FIELD MEASURE THE LENGTH ALONG THE CENTERLINE OF THE ROADWAY OR RAMP.

1524.07.3 CONCRETE EDGE RESTRAINT: ODOT WILL MEASURE CONCRETE EDGE RESTRAINTS (INCLUDING PAVEMENT DOWELS) BY THE NUMBER OF LINEAR FEET COMPLETED AND ACCEPTED IN PLACE. ODOT WILL FIELD MEASURE THE CONCRETE EDGE RESTRAINT ALONG THE LENGTH OF THE CENTERLINE OF THE CONCRETE EDGE RESTRAINT.

1524.08 BASIS OF PAYMENT

1524.08.1 THICKNESS VARIATIONS:

A. FOR BASE DEFICIENT IN THICKNESS, ODOT WILL PAY A REDUCED PRICE ACCORDING TO CMSC ITEM 451.17.

B. ODOT WILL NOT MAKE ADDITIONAL PAYMENT OVER CONTRACT UNIT PRICE FOR ANY BASE WITH AN AVERAGE THICKNESS IN EXCESS OF THAT SHOWN IN THE PLANS.

1524.09 WARRANTY
1524.09.1 TERM: CONTRACTOR SHALL WARRANT THE FINISHED ROADWAY PAVER PAVEMENT FOR A PERIOD OF 2-YEARS FROM THE DATE OF FINAL ACCEPTANCE BY ODOT.

1524.09.2 JOINT SAND LOSS:

A. THE PAVEMENT SHALL BE INSPECTED AT THE 1ST YEAR ANNIVERSARY AFTER ACCEPTANCE BY ODOT; IF REQUIRED, CONTRACTOR SHALL RE-SAND AND SEAL THE AREAS OF JOINT SAND LOSS AS DIRECTED BY THE ENGINEER.

B. THE PAVEMENT SHALL BE INSPECTED AT 18-MONTHS AFTER ACCEPTANCE BY ODOT; CONTRACTOR SHALL RE-SAND (WITH POLYMERIC JOINT SAND) THE AREAS OF JOINT SAND LOSS AS DIRECTED BY THE ENGINEER.

1524.09.3 CREEP: PROJECT SHALL BE INSPECTED FOR PAVER CREEP AT THE 1ST YEAR ANNIVERSARY AFTER ACCEPTANCE BY ODOT; IF REQUIRED, CONTRACTOR SHALL REPLACE PAVERS, RE-SAND AND SEAL THE CREEP AS DIRECTED BY THE ENGINEER.

1524.09.4 RUTTING: PROJECT SHALL BE INSPECTED FOR PAVER RUTTING AT THE 1ST YEAR ANNIVERSARY AFTER ACCEPTANCE BY ODOT; IF REQUIRED, CONTRACTOR SHALL REPLACE FULL DEPTH PAVEMENT SECTION AS DIRECTED BY THE ENGINEER.

CALCULATED TAZ
CHECKED JSS

GENERAL NOTES

FRA-70-14.54

ms consultants, inc.

ITEM SPECIAL MISC.: MANHOLE REHABILITATION

ANY SANITARY OR COMBINATION SEWER MANHOLE THAT IS BEING RECONSTRUCTED TO GRADE OR PROPOSED CONDUITS ARE TYING INTO IT SHALL BE REHABILITATED PER THE CITY OF COLUMBUS SUPPLEMENTAL SPECIFICATION SS-10. THE CONTRACTOR ALONG WITH AN ENGINEER FROM THE CITY'S DOSD SHALL INSPECT THE MANHOLE TO BE REHABILITATED PRIOR TO THE START OF CONSTRUCTION TO DETERMINE WHAT ITEMS IN SS-10 PERTAIN TO THAT MANHOLE FOR THE CITY'S SS-10. SEE THE GENERAL NOTE "COC SUPPLEMENTAL SPECIFICATIONS SS-10 MANHOLE REHABILITATION".

ALL MATERIALS AND LABOR, INCLUDING EXCAVATION AND BACKFILL ARE PAID FOR AT THE CONTRACT PRICE FOR ITEM 690E98000 SPECIAL MISC.: MANHOLE REHABILITATION.

C.O.C. SUPPLEMENTAL SPECIFICATION SS-10 MANHOLE REHABILITATION

PART 1 GENERAL

1.01 - SUMMARY

A. THE CONTRACTOR SHALL PROVIDE ALL LABOR, MATERIALS, OPERATION, AND EQUIPMENT NECESSARY TO REHABILITATE MANHOLES IN ACCORDANCE WITH THE PLANS, AS SPECIFIED WITHIN, OR AS DESIGNATED BY THE ENGINEER. THIS ITEM SHALL INCLUDE ALL STRUCTURAL RESTORATION; ELIMINATION OF INFLOW AND/OR INFILTRATION; MANHOLE STEP REPLACEMENT; BASE AND CHANNEL REPAIR; EXCAVATION; REMOVAL AND DISPOSAL OF ALL EXCESS MATERIALS; RESTORATION; BACKFILL; PERMANENT AND TEMPORARY PAVEMENT REPLACEMENT; CLEARING AND GRUBBING; RESETTING, REPLACING, AND/OR RAISING CASTING TO GRADE; AND DEWATERING REQUIRED FOR MANHOLE REHABILITATION.

SPECIFIC WORK ITEMS TO BE PERFORMED AT EACH MANHOLE ARE LISTED ON THE PLANS. REFER TO STANDARD DRAWINGS AA-S171, AA-S172 AND AA-S173 FOR SPECIFIC INFORMATION ON MANHOLE REHABILITATION AND RECONSTRUCTION AS LISTED HEREIN. ALL EXISTING FRAMES AND COVERS SHALL BE SALVAGED AND DELIVERED TO SMOC.

B. RELATED SECTIONS:

1. SS-3, BYPASS PUMPING
2. SS-6, CHEMICAL GROUTING
3. SS-7, CEMENTITIOUS GROUTING

1.02 - REFERENCES

A. REFERENCE STANDARDS: COMPLY WITH APPLICABLE PROVISIONS AND RECOMMENDATIONS OF THE FOLLOWING, EXCEPT AS OTHERWISE SHOWN OR SPECIFIED:
1. ASTM C109/C109M, STANDARD TEST METHOD FOR COMPRESSIVE STRENGTH OF HYDRAULIC CEMENT MORTARS (USING 2-IN. OR [50-MM] CUBE SPECIMENS)
2. ASTM C293, STANDARD TEST METHOD FOR FLEXURAL STRENGTH OF CONCRETE (USING SIMPLE BEAM WITH CENTER-POINT LOADING)
3. ASTM C321, STANDARD TEST METHOD FOR BOND STRENGTH OF CHEMICAL-RESISTANT MORTARS
4. ASTM D412, STANDARD TEST METHODS FOR VULCANIZED RUBBER AND THERMOPLASTIC ELASTOMERSTENSION
5. ASTM C478, STANDARD SPECIFICATION FOR PRECAST REINFORCED CONCRETE MANHOLE SECTIONS
6. ASTM C494/C494M, STANDARD SPECIFICATION FOR CHEMICAL ADMIXTURES FOR CONCRETE
7. ASTM C496/C496M, STANDARD TEST METHOD FOR SPLITTING TENSILE STRENGTH OF CYLINDRICAL CONCRETE SPECIMENS
8. ASTM C596, STANDARD TEST METHOD FOR DRYING SHRINKAGE OF MORTAR CONTAINING HYDRAULIC CEMENT
9. ASTM D624, STANDARD TEST METHOD FOR TEAR STRENGTH OF CONVENTIONAL VULCANIZED RUBBER AND THERMOPLASTIC ELASTOMERS
10. ASTM D638, STANDARD TEST METHODS FOR TENSILE PROPERTIES OF PLASTIC
11. ASTM D695, STANDARD TEST METHOD FOR COMPRESSIVE PROPERTIES OF RIGID PLASTIC
12. ASTM C780, STANDARD TEST METHOD FOR PRECONSTRUCTION AND CONSTRUCTION EVALUATION OF MORTARS FOR PLAIN AND REINFORCED UNIT MASONRY
13. ASTM D790, STANDARD TEST METHOD FOR FLEXURAL PROPERTIES OF UNREINFORCED/REINFORCED PLASTICS
14. ASTM C882/C882M, STANDARD TEST METHOD FOR BOND STRENGTH OF EPOXY-RESIN SYSTEMS USED WITH CONCRETE BY SLANT SHEAR
15. ASTM C1244/C1244M, STANDARD TEST METHOD FOR CONCRETE SEWER MANHOLES BY THE NEGATIVE AIR PRESSURE (VACUUM) TEST PRIOR TO BACKFILL
16. ASTM D2240, STANDARD TEST METHOD FOR RUBBER AND DUROMETER HARDNESS
17. ASTM F2414, STANDARD PRACTICE FOR SEALING SEWER MANHOLES USING CHEMICAL GROUTING
18. ASTM F2551-09, STANDARD PRACTICE FOR INSTALLING A PROTECTIVE CEMENTITIOUS LINER SYSTEM IN SANITARY SEWER MANHOLES
19. ASTM D2240, STANDARD TEST METHOD FOR RUBBER PROPERTY DUROMETER HARDNESS
20. ASTM 4541, STANDARD TEST METHOD FOR PULL-OFF STRENGTH OF COATINGS USING PORTABLE ADHESION TESTERS
21. CITY OF COLUMBUS STANDARD DRAWING AA-S171
22. CITY OF COLUMBUS STANDARD DRAWING AA-S172
23. CITY OF COLUMBUS STANDARD DRAWING AA-S173

B. MANUFACTURER'S RECOMMENDATIONS

1.03 - DEFINITIONS (NOT USED)
1.04 - SYSTEM DESCRIPTION (NOT USED)

1.05 SUBMITTALS

THE FOLLOWING SUBMITTALS (A-D) SHALL BE MADE AT THE PRE-CONSTRUCTION MEETING:

A. CONTRACTOR QUALIFICATIONS. THE CONTRACTOR SHALL SUBMIT A COPY OF THE MANUFACTURER'S LICENSEE CERTIFICATE. IF THE CONTRACTOR IS NOT LICENSED BY THE MANUFACTURER, THEN A MANUFACTURER'S REPRESENTATIVE WILL BE ON-SITE. CONTRACTOR SHALL ALSO SUBMIT A LIST OF TEN (10) SIMILAR REGIONAL PROJECTS COMPLETED WITHIN THE LAST THREE (3) YEARS INCLUDING INFORMATION SUCH AS NUMBER OF MANHOLES ON PROJECT, MANHOLE CONSTRUCTION TYPE, DATE COMPLETED, AND PROJECT COST.

B. MATERIAL CERTIFICATIONS. THE CONTRACTOR SHALL FURNISH THE MANUFACTURER'S PRODUCT DATA, INSTALLATION INSTRUCTIONS, APPLICABLE REFERENCED WORK STANDARDS (AMERICAN SOCIETY FOR TESTING AND MATERIALS [ASTM], AMERICAN CONCRETE INSTITUTE [ACI], ETC.), APPROVED LABORATORY TEST REPORTS THAT VERIFY STRENGTH REQUIREMENTS OF THIS SPECIFICATION, AND MATERIALS CERTIFICATION FOR EACH PRODUCT USED PRIOR TO MATERIAL INSTALLATION.

C. MATERIAL SAFETY DATA SHEETS. THE CONTRACTOR SHALL SUBMIT MATERIAL SAFETY DATA SHEETS (MSDS) FOR ALL MATERIALS USED FOR MANHOLE REHABILITATION.

D. APPLICATION METHODS AND EQUIPMENT. THE CONTRACTOR SHALL SUBMIT A WRITTEN DESCRIPTION OF THE MATERIAL APPLICATION METHODS INCLUDING THE EQUIPMENT THAT WILL BE USED.

E. POLYMER MANHOLE LINER THICKNESS CALCULATIONS. THE CONTRACTOR SHALL SUBMIT THEIR DESIGN CALCULATIONS FOR THE REQUIRED THICKNESS OF THE POLYMER COATING BASED ON THE MANHOLE DEPTH AND WATER TABLE LEVEL.

1.06 - QUALITY ASSURANCE

A. CONTRACTOR'S QUALIFICATIONS.

1. THE MANHOLE REHABILITATION CONTRACTOR SHALL BE A FIRM HAVING A MINIMUM OF 3 YEARS CONTINUOUS SUCCESSFUL EXPERIENCE IN THE REHABILITATION OF MANHOLES SIMILAR TO THAT REQUIRED FOR THIS PROJECT.
2. THE MANHOLE LINING CONTRACTOR SHALL BE CERTIFIED/TRAINED BY THE LINING MATERIAL MANUFACTURER TO INSTALL THEIR MANHOLE LINER IF THE MATERIAL REQUIRES A CERTIFIED APPLICATOR. THE CITY RESERVES THE RIGHT TO REQUIRE AN ON-SITE MANUFACTURER'S REPRESENTATIVE, KNOWLEDGEABLE IN THE USE AND APPLICATION OF THE MATERIAL, FOR A MINIMUM OF TWO (2) WORKING HOURS FOR EACH SUPPLIED MATERIAL. THE MATERIAL REPRESENTATIVE SHALL DIRECT AND INSTRUCT THE CONTRACTOR AND INSPECTOR ON THE PROPER APPLICATION PROCEDURE.
3. ALL CONTRACTORS CONDUCTING WORK ON PUBLIC UTILITIES WITHIN THE CITY OF COLUMBUS MUST BE CERTIFIED/LICENSED WITH THE CITY. TO OBTAIN A LICENSE/CERTIFICATION CONTACT:

CITY OF COLUMBUS
DEPARTMENT OF PUBLIC UTILITIES
910 DUBLIN ROAD
COLUMBUS, OHIO 43215
HTTP://UTILITIES.COLUMBUS.GOV/FORMS-PERMITS.HTM

1.07 - DELIVERY, STORAGE AND HANDLING

A. CEMENTITIOUS MATERIALS SHALL BE STORED IN WEATHER TIGHT, ORIGINAL PACKAGING TO PROTECT AGAINST MOISTURE AND CONTAMINATION.

B. POLYMER MANHOLE LINING MATERIALS SHALL BE STORED IN UNMIXED CONTAINERS IN A SHELTERED AREA BETWEEN 50 DEGREES AND 95 DEGREES.

1.08 - PROJECT/SITE CONDITIONS

A. DO NOT WORK IN THE PRESENCE OF EXCESSIVE AMOUNTS OF WATER. REFER TO SUPPLEMENTAL SPECIFICATION SS-3, BYPASS PUMPING.

B. CONTRACTOR SHALL USE CAUTION WHEN WORKING IN SEWERS. DURING RAIN EVENTS, SEWERS MAY REACH CAPACITY QUICKLY AND/OR HEAD UP.

C. ALL WORK TO BE COMPLETED IN CONFORMANCE WITH ALL APPLICABLE SAFETY STANDARDS, IN PARTICULAR OSHA STANDARD 29CFR1910.146, PERMIT REQUIRED CONFINED SPACE ENTRY.

1.09 - SEQUENCING (NOT USED)
1.10 - SCHEDULING (NOT USED)

1.11 - WARRANTY

A. PROVIDE MANUFACTURER'S STANDARD WRITTEN GUARANTEES AND WARRANTIES DATED FROM TIME OF SUBSTANTIAL COMPLETION.

1.12 - SYSTEM STARTUP (NOT USED)
1.13 - INSTRUCTION OF OWNER'S PERSONNEL (NOT USED)
1.14 - COMMISSIONING (NOT USED)
1.15 - MAINTENANCE (NOT USED)

PART 2 PRODUCTS

2.01 - MANUFACTURERS

A. CEMENTITIOUS MANHOLE LINER W/ CORROSION RESISTANCE:
1. STRONG SEAL SYSTEMS, INC. STRONG SEAL MS-2C
2. BASF EMACO S88-CI

B. STRUCTURAL CEMENTITIOUS MANHOLE LINER
1. AP/M PERMAFORM PERMACAST MS-10,000
2. STRONG SEAL SYSTEMS, INC. STRONG SEAL MS-2A

C. POLYMER MANHOLE LINER:
1. SPRAYROQ PROTECTIVE LINING SYSTEMS - SPRAYWALL

D. FLEXIBLE CHIMNEY SEAL:
1. CRETEX SPECIALTY PRODUCTS INTERNAL CHIMNEY SEAL
2. NPC FLEXRIB FRAME CHIMNEY SEALS

E. MANHOLE CASTING RISER RING:
1. AMERICAN HIGHWAY PRODUCTS STAINLESS STEEL MANHOLE RISER

2.02 - EXISTING EQUIPMENT

A. THE CONTRACTOR SHALL NOTIFY MATT PANKO AT (614) 645-8396, 48 HOURS IN ADVANCE TO COORDINATE THE REMOVAL OR RELOCATION OF ANY EXISTING FLOW MONITOR. THE CONTRACTOR SHALL PROVIDE THE LOCATION AND MANHOLE STRUCTURE NUMBER.

B. THE CONTRACTOR SHALL CAREFULLY REMOVE ALL EXISTING MECHANICAL INTERNAL MANHOLE CHIMNEY SEALS ENCOUNTERED PRIOR TO BEGINNING THE SCHEDULED MANHOLE REHABILITATION AND STORE THEM FOR REUSE. ONCE REHABILITATION IS COMPLETE THE CONTRACTOR SHALL REINSTALL THE INTERNAL CHIMNEY SEAL PER SECTION 3.08.I.

2.03 - MATERIALS

MATERIALS SHALL MEET THE FOLLOWING STANDARDS, CMSC SPECIFICATIONS, OR MINIMUM STRENGTH REQUIREMENTS:

A. GROUT. PORTLAND CEMENT SHALL CONFORM TO CMSC 701.02; SAND SHALL CONFORM TO CMSC 703.03.

B. MANHOLE STEPS. STEPS SHALL BE REINFORCED POLYPROPYLENE IN ACCORDANCE WITH CMSC 711.31.

C. BRICK. BRICK USED IN SANITARY STRUCTURES SHALL BE CLAY OR SHALE BRICK AND CONFORM TO CMSC 704.01.

D. CAST IN PLACE CONCRETE. CAST IN PLACE CONCRETE SHALL BE CLASS "C" WITH A 28-DAY COMPRESSIVE STRENGTH OF 4000 PSI AND CONFORM TO CMSC 499.

E. REINFORCING STEEL. REINFORCING STEEL SHALL BE GRADE 60 AND IN ACCORDANCE WITH CMSC 509.

F. MORTAR. CEMENT SHALL CONFORM TO CMSC 701.01 THROUGH 701.07; LIME SHALL CONFORM TO CMSC 712.04; SAND SHALL CONFORM TO CMSC 703.03.

G. WATER. WATER SHALL BE POTABLE.

PLOT.CEL
ms consultants, inc.
msconsultants.com
Ohio DOT Workspace
70\71 East Interchange 2E
www.msconsultants.com
Batchplot Spec: \\msconsultants.com\files\production\03\60\06634_2E\standards\plotdrv\batchplt.spc UCF: ohdotV8i
Pen Table: \\msconsultants.com\files\Standards\ustn\ohdot\V8i\ms\plotting\pen\V8i_ms_std.tbl PCF: 60-06634_2E_Columbus
Plot Driver: \\msconsultants.com\files\Standards\ustn\ohdot\v8i\ms\plotting\PDF.pltcfg
34" x 22"
Model: Sheet View: FENCE_VIEW1
Printed: 6/19/2018 @ 7:57:49 AM By: jdouglas
File: N:\03\60\06634_2E\roadway\sheets\105322GN012.dgn

PLOT.CEL
ms consultants, inc.
msconsultants.com
www.msconsultants.com
Ohio DOT Workspace
70\71 East Interchange 2E
PDF: ohdot\8i
PCF: 60-06634_2E_Columbus
Batchplot Spec: \\msconsultants.com\files\production\03\60\06634_2E\standards\plotdr\batchplt.spc
Pen Table: \\msconsultants.com\files\Standards\astm\ohdot\V8i\ms\plotting\pen\V8i_ms_std.tbl
Plot Driver: \\msconsultants.com\files\Standards\astm\ohdot\v8i\ms\plotting\PDF.pltcfg
Model: Sheet
Printed: 6/19/2018 @ 7:57:51 AM
File: N:\03\60\06634_2E\roadway\sheets\V05322C0013.dgn
View: FENCE_VIEW1
By: jdouglas
34" x 22"

C.O.C. SUPPLEMENTAL SPECIFICATION SS-10
MANHOLE REHABILITATION (CONT.)

2.04 - MANUFACTURED UNITS

A. MANHOLE FRAMES AND COVERS. STANDARD MANHOLE FRAMES AND COVERS SHALL MEET THE REQUIREMENTS OF STANDARD DRAWING AA-S111. 36" CASTINGS SHALL BE IN ACCORDANCE WITH STANDARD DRAWING AA-S114 AND SHALL CONTAIN A SELF-SEALING GASKET AND CONCEALED LIFT HOLE. VENT HOLES IN ANY SANITARY SEWER COVER WILL NOT BE PERMITTED.
B. MANHOLE GRADE RINGS. MANHOLE GRADE RINGS SHALL CONFORM TO ASTM C-478 AND STANDARD DRAWING AA-S107.
C. PRECAST MANHOLE SECTIONS. PRECAST MANHOLE SECTIONS SHALL BE IN ACCORDANCE WITH ASTM C-478.

2.05 - EQUIPMENT

A. EQUIPMENT SHALL BE AS RECOMMENDED BY THE MANUFACTURER TO ENSURE PROPER MIXING AND PUMPING AND SHALL BE CLEAN AND IN GOOD WORKING ORDER ACCORDING TO THE RECOMMENDATIONS FOR SAFE OPERATION.

2.06 - COMPONENTS (NOT USED)
2.07 - ACCESSORIES (NOT USED)
2.08 - MIXES (NOT USED)
2.09 - FABRICATION (NOT USED)
2.10 - FINISHES (NOT USED)

2.11 - SOURCE QUALITY CONTROL

A. ALL PREPACKAGED MANHOLE LINING MATERIALS SHALL HAVE THE DATE OF MANUFACTURE CLEARLY MARKED ON THE PACKAGE AND BE UNMIXED. ALL MATERIAL MANUFACTURE DATES MUST BE WITHIN THE MANUFACTURER'S RECOMMENDED LIMITS FOR INSTALLATION.
B. ALL MANHOLE FRAME AND COVERS SHALL BE DATED WITHIN 1 YEAR OF THE INSTALLATION DATE.

PART 3 EXECUTION

3.01 - ACCEPTABLE INSTALLERS (NOT USED)

3.02 - EXAMINATION

A. THE CONTRACTOR IS TO CONDUCT QA ON ALL MATERIALS DELIVERED TO THE SITE TO ENSURE THAT ALL ITEMS MEET THE REQUIRED STANDARDS STATED HEREIN. ALL MATERIALS THAT DO NOT MEET THE REQUIRED STANDARDS SHALL BE REMOVED FROM THE JOBSITE.

3.03 - PREPARATION

A. RIGHT OF ENTRY. WHEN PRIVATE PROPERTY MUST BE CROSSED TO ACCESS A MANHOLE, THE CONTRACTOR SHALL OBTAIN WRITTEN RIGHT OF ENTRY (ROE) SIGNED BY THE PROPERTY OWNER. THE ROE SHALL DESCRIBE THE EXTENT OF WORK, ITEMS TO BE RESTORED, WARRANTY AND SCHEDULE. A SIGNED COPY OF THE ROE SHALL BE PROVIDED TO THE ENGINEER PRIOR TO EXCAVATION. THE COST FOR OBTAINING THE RIGHT OF ENTRY AND ASSOCIATED RESTORATION WORK SHALL BE INCLUDED IN THE UNIT BID PRICES FOR EACH MANHOLE WHERE REQUIRED. NECESSARY TREE REMOVAL SHALL BE PAID FOR UNDER BID ITEM 201, CLEARING AND GRUBBING OR ITEM 201 TREE REMOVAL.
B. NOTIFICATION. THE CONTRACTOR SHALL NOTIFY, IN WRITING, ALL ADJACENT LANDOWNERS A MINIMUM OF ONE WEEK IN ADVANCE OF WORK NEAR THEIR PROPERTY.
C. DEBRIS DAM. THE CONTRACTOR SHALL PLACE A DEVICE IN THE MANHOLE TO CATCH ANY DEBRIS THAT MAY BE DISPLACED INTO THE MANHOLE DURING THE PERFORMANCE OF THE WORK. WORK SHALL NOT PROCEED UNTIL THIS DEVICE IS IN PLACE.
D. STEPS. ALL STEPS SHALL BE REMOVED COMPLETELY FROM THOSE MANHOLES RECEIVING LINING. CARE MUST BE TAKEN TO MINIMIZE DAMAGE TO THE MANHOLE WALL DURING REMOVAL OF THE STEPS. STEPS SHALL BE REPLACED AFTER LINING IS COMPLETED. IN THE EVENT THE LINED MANHOLE IS TOO CONSTRICTED TO ALLOW SAFE AND EASY ENTRY WITH THE INSTALLATION OF STEPS, THIS ITEM MAY BE NON-PERFORMED AT THE DIRECTION OF CMT.
E. CLEANING. PRIOR TO ANY REPAIR WORK INSIDE THE MANHOLE, ALL INTERIOR WALL AND INVERT SURFACES SHALL BE CLEANED AND FREE OF ANY LOOSE MATERIAL UTILIZING THE FOLLOWING METHODS.
   1. POWER WASHING. EQUIPMENT SHALL BE CAPABLE OF PRODUCING A MINIMUM OF 5,000 POUNDS PER SQUARE INCH (PSI) WATER BLAST TO REMOVE ALL FOREIGN MATTER, LOOSE MORTAR, GREASE, OIL RESIDUES, RUST, SCALE AND TO ETCH THE SURFACES.
      A. ALL SURFACES MUST BE DRY BEFORE THE APPLICATION OF THE POLYMER LINING MATERIAL.
   2. CHIPPING. IF LARGE DEPOSITS EXIST OR POWER WASHING CANNOT REMOVE ALL DEPOSITS, THEN THE CONTRACTOR SHALL REMOVE THE DEPOSITS BY CHIPPING. THE CONTRACTOR SHALL ALSO REMOVE ALL LOOSE, BROKEN OR SOFTENED CONCRETE/BRICKS TO SOUND MATERIAL. ANY VOIDS LEFT BY CHIPPING PROCEDURES IN MANHOLE WALLS OR INVERT SURFACES SHALL BE REPAIRED IN ACCORDANCE WITH SECTION 3.06.A.3.
   3. MURIATIC ACID. IF THE POWER WASHING AND/OR CHIPPING CANNOT BE UTILIZED DUE TO STRUCTURAL CONDITIONS IN THE MANHOLE OR THEY DO NOT REMOVE ALL DEPOSITS, THEN A SOLUTION OF MURIATIC ACID (HYDROCHLORIC ACID) SHALL BE APPLIED AT A RATIO OF ONE PART ACID TO TEN PARTS WATER BY SPRAYING FROM ABOVE THE MANHOLE. THE USE OF ACID FOR CLEANING PURPOSES, NO MATTER HOW DILUTED, IS NOT PERMITTED FOR POLYMER LINING. AFTER THE ACID SOLUTION IS APPLIED, IT SHALL BE WASHED OFF COMPLETELY. THE MIXING, APPLICATION, AND REMOVAL OF THE ACID SOLUTION SHALL BE DONE IN STRICT ACCORDANCE WITH THE MANUFACTURER'S SPECIFICATIONS AND SAFETY PROCEDURES.
   4. STEEL SURFACES. SOLVENT CLEANING WILL BE NECESSARY FOR STEEL SURFACES TO BE COATED WITH THE POLYMER LINING MATERIAL. WHEN APPLICABLE THE STEEL SURFACES MAY ALSO BE CLEANED UTILIZING HIGH (> 5,000 PSI) OR ULTRA HIGH (> 10,000 PSI) WATER PRESSURE CLEANING OR WATER WITH SAND INJECTION AND APPROVED RUST INHIBITORS. THE SURFACE PROFILE MUST BE A MINIMUM OF 2 MILS.
   5. FIBERGLASS SURFACES. ONLY THE POLYMER LINING MATERIAL IS INTENDED FOR USE ON FIBERGLASS SURFACES. PREPARE FIBERGLASS BY RINSING, NEUTRALIZING, SCARIFYING AND CLEANING WITH WATER OR A MIXTURE OF WATER AND SOLVENT. BE SURE ALL DUST AND LOOSE PARTICLES ARE REMOVED. THE SURFACE SHOULD BE THOROUGHLY DRY BEFORE THE APPLICATION OF THE POLYMER MATERIAL.
F. WASTE REMOVAL. ALL WASTE MATERIALS RESULTING FROM THE CLEANING OPERATION SHALL BE REMOVED FROM THE MANHOLE OR SITE AND BE PROPERLY DISPOSED OF BY THE CONTRACTOR.

3.04 - ERECTION (NOT USED)
3.05 - INSTALLATION (NOT USED)

3.06 - APPLICATION

A. MANHOLE LINING
   1. INSPECTION. THE MANHOLE WALLS SHALL BE VISUALLY EXAMINED, SOUNDED AND/OR PROBED TO IDENTIFY ANY INFILTRATION POINTS AND ANY INTERNAL OR EXTERNAL VOID AREAS PRIOR TO ANY MATERIAL BEING APPLIED TO THE WALLS.
   2. STOPPING INFILTRATION. LIGHT INFILTRATION INTO THE MANHOLE SHALL BE STOPPED USING A WATER PLUG MATERIAL APPROVED PER THE MANHOLE LINER MANUFACTURER. IF HEAVY INFILTRATION IS ENCOUNTERED, THE CONTRACTOR MAY DRILL UP TO FOUR 5/8-INCH DIAMETER HOLES AROUND THE BASE OF THE MANHOLE TO ACT AS RELIEF PORTS, ALLOWING THE WATER TO SEEP INTO THE MANHOLE FLOW CHANNEL WHICH WILL ALLOW FOR THE WATER PLUG MATERIAL TO BE APPLIED. ONCE THE LEAKING WALLS HAVE BEEN SEALED, THE DRILLED RELIEF HOLES SHALL BE PLUGGED WITH THE SPECIFIED WATER PLUG MATERIAL. THE COST OF DRILLING THESE RELIEF HOLES SHALL BE INCLUDED IN THE COST OF THE MANHOLE REHABILITATION ITEMS. IF THE RELIEF DRILLING IS NOT EFFECTIVE THE INFILTRATION SHALL BE STOPPED BY INJECTING CHEMICAL GROUT PER SPECIFICATION SS-6.
   3. PATCHING. INTERNAL VOIDS (I.E., BRICKS MISSING IN MANHOLE WALLS, STEP REMOVAL DAMAGE, FRAMES, PIPES, AND MORTAR JOINTS) SHALL BE PATCHED WITH A PATCHING MORTAR APPROVED PER THE MANHOLE LINER MANUFACTURER. ALL LOOSE OR DEFECTIVE MATERIAL SHALL BE REMOVED FROM THE AREA TO BE PATCHED, EXPOSING A SOUND SUBSTRATE. THE PATCHING MORTAR SHALL BE APPLIED TO A SSD SURFACE. ALL REPAIRS SHALL BE MADE SMOOTH AND FLUSH WITH THE FACE OF THE MANHOLE WALL. EXTERNAL VOID AREAS SHALL BE REPAIRED IN ACCORDANCE WITH SPECIFICATION SS-7 CEMENTITIOUS GROUTING.
   4. CEMENTITIOUS MANHOLE LINING. WHERE THERE IS EVIDENCE OF A SULFIDE CONDITION IN THE MANHOLE, THE CEMENTITIOUS LINING MATERIAL SHALL OFFER A LEVEL OF SULFIDE RESISTANCE COMPATIBLE TO WHAT IS DEEMED NECESSARY BY THE ENGINEER. VARYING LEVELS OF PROTECTION ARE OFFERED BY MATERIALS SUCH AS SILICA-FUME ENHANCED PORTLAND CEMENT, CALCIUM ALUMINATE CEMENT, AND CALCIUM ALUMINATE AGGREGATE IN CONJUNCTION WITH CALCIUM ALUMINATE CEMENT. THE MANHOLE WALL SURFACE SHALL BE IN A SATURATED, SURFACE-DRY CONDITION IMMEDIATELY PRECEDING APPLICATION OF THE CEMENTITIOUS MATERIAL, OR IN ACCORDANCE WITH MANUFACTURER'S REQUIREMENTS.

THE CEMENTITIOUS LINING MAY BE APPLIED WITH LOW PRESSURE SPRAY EQUIPMENT OR HAND TROWELING METHODS (REQUIRES APPROVAL OF OWNER). IF HAND TROWELING IS TO BE UTILIZED, CONSULT MANUFACTURER FOR SPECIAL REQUIREMENTS (E.G. SCRUBBING A BONDCOAT SLURRY ONTO THE SURFACE.) IF THE CEMENTITIOUS LINING IS TO BE SPRAY APPLIED, THE CONTRACTOR SHALL TAKE CARE TO PREVENT OVERSPRAY FROM ENTERING THE SEWER LINES BY MEANS OF A DEBRIS DAM OR OTHER METHODS. THE CEMENTITIOUS MATERIAL THICKNESS APPLICATION SHALL BE A MINIMUM OF 0.375-INCHES AND NOT MORE THAN 2.0-INCHES PER PASS. THE MINIMUM ACCEPTABLE FINISHED THICKNESS SHALL BE 1-INCH FROM THE INSIDE FACE OF THE MANHOLE WALL. THE CONTRACTOR SHALL CURE IN ACCORDANCE WITH THE MANUFACTURER'S INSTRUCTIONS FOLLOWING THE APPLICATION OF THE FINAL CEMENTITIOUS LAYER. THE CEMENTITIOUS LINING SHALL BE APPLIED IN NOT MORE THAN TWO PASSES FROM BOTTOM TO TOP. NO MORE THAN 24-HOURS SHALL ELAPSE BETWEEN SUCCESSIVE PASSES ON EACH MANHOLE. THE SECOND PASS CANNOT BE MADE UNTIL THE FIRST PASS HAS ACHIEVED INITIAL SET. IF MORE THAN 24 HOURS ELAPSE BETWEEN PASSES, THEN INITIAL COAT MUST BE REMOVED AND THE PROCESS RESTARTED.
   5. POLYMER MANHOLE LINING. APPLICATION OF THE POLYMER MANHOLE LINER SHALL NOT BE MADE UNLESS THE AMBIENT TEMPERATURE INSIDE THE STRUCTURE IS 50 DEGREES OR HIGHER AND ALL SURFACES THAT ARE TO BE COATED ARE DRY.

THE POLYMER MATERIAL SHALL BE MANUALLY SPRAYED ON TO ALL SURFACES BY A TRAINED TECHNICIAN WHO IS EXPERIENCED IN THE APPLICATION OF A SPRAY APPLIED RESIN AND HAS BEEN CERTIFIED BY THE MANUFACTURER. THE MINIMUM THICKNESS TO BE APPLIED IS TO BE NO LESS THAN 250 MILS IN ORDER TO SUPPORT STRUCTURAL INTEGRITY AND NO MORE THAN 500 MILS ARE TO BE APPLIED IN A SINGLE APPLICATION. NO MORE THAN 1,000 MILS SHALL BE APPLIED IN ANY ONE DAY OF APPLICATION. THE WATER TABLE LEVEL MAY REQUIRE A THICKER COATING BELOW ITS LEVEL FOR STRUCTURAL SUPPORT. THE CONTRACTOR SHALL SUBMIT THEIR DESIGN CALCULATIONS FOR EACH MANHOLE THAT IS TO BE LINED. IF SEVERAL COATS ARE REQUIRED, NO MORE THAN 15 MINUTES SHALL BE ALLOWED BETWEEN LINER APPLICATIONS. ALL PRECAUTIONS SHOULD BE TAKEN TO PROTECT THE SURFACES BETWEEN COATS SO THAT ADDITIONAL CLEANING WILL NOT BE REQUIRED. IF PORTIONS OF THE MANHOLE, SUCH AS THE BENCH, INVERT, OR BELOW THE WATER TABLE, REQUIRE A THICKER COATING THAN THE AREAS ABOVE THE WATER TABLE, THOSE AREAS SHALL BE COATED FIRST SO THAT THE FINAL COAT IS A MONOLITHIC LINER FROM TOP TO BOTTOM FOR STRUCTURAL ENHANCEMENT. NO OTHER PRODUCTS SUCH AS CEMENT OR GROUTS MAY BE USED AS PART OF THE STRUCTURAL REINSTATEMENT, HOWEVER, SAID PRODUCTS MAY BE USED AS PART OF THE REPAIR PROCESS PRIOR TO THE SPRAYED APPLICATION OF THE STRUCTURE AS SPECIFIED IN SECTION 3.06.A.2-3. APPLICATION OF THE POLYMER MATERIAL MUST BE COMPLETED IN ONE MOBILIZATION, UNLESS A THICKNESS OF MORE THAN 1,000 MILS IS SPECIFIED. THE FINISHED MANHOLE SHALL BE RETURNED TO FULL SERVICE IMMEDIATELY AFTER THE 60 MINUTE INITIAL CURING PERIOD HAS LAPSED.

3.07 - CONSTRUCTION (NOT USED)

3.08 - REPAIR/RESTORATION

A. RAISE MANHOLE COVER TO GRADE. THE CONTRACTOR SHALL MEASURE EACH MANHOLE TO ENSURE PROPER RISER RING HEIGHT. IF A FRAME HAS AN EXISTING RISER RING INSTALLED, IT SHALL BE REMOVED PRIOR TO THE MEASUREMENT SO THAT THE NEW RISER RING WILL INCORPORATE THAT HEIGHT. NO FRAME SHALL HAVE MORE THAN ONE (1) RISER RING INSTALLED AND NO RISER RING SHALL EXCEED 12" UNLESS APPROVED BY CMT. THE RISER RING SHALL BE SECURED TO THE FRAME WITH SET SCREWS AND A TAR SEALANT SHALL BE APPLIED BETWEEN THE RISER RING AND FRAME.
   1. ANY MANHOLE COVER DESIGNATED TO BE RAISED TO GRADE SHALL HAVE THE FRAME AND COVER RAISED TO GRADE PER SECTION 3.08.C IF IT WILL REQUIRE A RISER RING LARGER THAN 12".
   2. IF RAISING THE MANHOLE COVER WOULD RESULT IN THE CHIMNEY HEIGHT EXCEEDING 26", THE MANHOLE SHALL BE RECONSTRUCTED TO GRADE PER SECTION 3.08.D. THE RESULTING CHIMNEY SECTION FOR THE MANHOLE RECONSTRUCTED TO GRADE SHALL NOT EXCEED 18-INCHES.

CALCULATED - CHECKED -

GENERAL NOTES

FRA-70-14.54

ms consultants, inc.

PLOT.CEL
ms consultants, inc.
msconsultants.com
www.msconsultants.com
Ohio DOT Workspace
70\71 East Interchange 2E
Batchplot Spec: \\msconsultants.com\files\production\03\60\06634_2E\standards\plotdrv\batchplt.spc UCF: ohdotV8i
Pen Table: \\msconsultants.com\files\Standards\ustn\ohdot\V8i\ms\plotting\pen\V8i_ms_std.tbl PCF: 60-06634_2E_Columbus
Plot Driver: \\msconsultants.com\files\Standards\ustn\ohdot\v8i\ms\plotting\PDF.pltcfg
34" x 22"
Model: Sheet View: FENCE_VIEW1
Printed: 6/19/2018 @ 7:57:52 AM By: jdouglas
File: N:\03\60\06634_2E\roadway\sheets\105322GN014.dgn

C.O.C. SUPPLEMENTAL SPECIFICATION SS-10 MANHOLE REHABILITATION (CONT.)

3.08 - REPAIR/RESTORATION (CONT.)

B. REPLACE MANHOLE FRAME AND COVER. THE SOIL AROUND THE CASTING SHALL BE REMOVED TO A DEPTH WHICH WILL PREVENT DISPLACEMENT OF MATERIAL INTO THE MANHOLE AFTER THE FRAME AND COVER AND LOOSE BRICK WORK IS REMOVED. THE EXISTING CASTINGS AND COVERS SHALL BE CAREFULLY REMOVED AND SALVAGED AS DIRECTED. THE TOP OF THE WALLS SHALL HAVE ALL LOOSE MORTAR, DETERIORATED MASONRY AND BRICK REMOVED TO SOUND MATERIAL. THE RESULTING SURFACE SHALL BE CLEANED WITH A WATER BLAST TO REMOVE ANY REMAINING SCALE, DUST AND DELETERIOUS MATERIALS. THE FRAME SHALL BE SET IN A BED OF MORTAR AND CAST INTO A REINFORCED CONCRETE COLLAR PER 3.08.E IF SPECIFIED IN THE PLANS. THE SURFACE SHALL BE RESTORED AS DESCRIBED IN SECTION 3.08.H.

C. RAISE MANHOLE FRAME AND COVER TO GRADE. REMOVAL OF THE MANHOLE FRAME AND COVER SHALL BE IN ACCORDANCE WITH SECTION 3.08.B BUT AFTER THE SURFACE HAS BEEN CLEANED THE CONTRACTOR SHALL RAISE THE EXISTING SUPPORT WALLS. A BONDING AGENT SHALL BE APPLIED TO THE TOP OF THE EXISTING WALL SURFACE AND ALLOWED TO REACH THE RECOMMENDED CURE PERIOD. THEN THE SUPPORTING WALLS SHALL BE RAISED TO THE SPECIFIED ELEVATION SHOWN IN THE PLANS USING BRICK, PRECAST GRADE RINGS OR MORTAR MASONRY CONSTRUCTION. THE MANHOLE FRAME AND COVER SHALL BE INSTALLED AS DESCRIBED IN SECTION 3.08.B AND THE SURFACE SHALL BE RESTORED AS DESCRIBED IN SECTION 3.08.H.

1. ANY MANHOLE DESIGNATED TO BE RAISED TO GRADE SHALL BE RECONSTRUCTED TO GRADE PER SECTION 3.08.D IF THE DISTANCE FROM THE PROPOSED TOP OF CASTING TO THE BOTTOM OF THE CHIMNEY WILL EXCEED 26-INCHES. THE RESULTING CHIMNEY SECTION FOR THE MANHOLE RECONSTRUCTED TO GRADE SHALL NOT EXCEED 18-INCHES.

D. RECONSTRUCT MANHOLE TO GRADE. THE EXISTING FRAME, CHIMNEY SECTION, CORBELLING AND MANHOLE WALLS SHALL BE REMOVED TO THE ELEVATION REQUIRED TO PROPERLY REBUILD THE MANHOLE TO THE SPECIFIED ELEVATION OR TO AN ELEVATION WHERE SOUND CONCRETE/BRICK AND MORTAR CONSTRUCTION IS ENCOUNTERED. THE EXCAVATION AROUND THE PERIPHERY OF THE WALLS SHALL BE EXTENDED BELOW THE WALL DEMOLITION LEVEL TO PROVIDE FOR ENCASEMENT OF THE TRANSITION JOINT. THE MANHOLE SHALL THEN BE RECONSTRUCTED TO THE ELEVATION SHOWN ON THE PLANS UTILIZING PRECAST UNITS AS SHOWN ON STANDARD DRAWING AA-S102 FOR TYPE "C" MANHOLES. THE TRANSITION JOINT SHALL BE ENCASED WITH 6-INCH THICK CLASS "C" CONCRETE EXTENDING 6-INCHES ABOVE AND BELOW THE HORIZONTAL JOINT. THE MANHOLE FRAME AND COVER SHALL BE INSTALLED AS DESCRIBED IN SECTION 3.08B AND THE SURFACE RESTORED AS DESCRIBED IN SECTION 3.08.H. THE BRICK AND MORTAR WALLS SHALL BE REHABILITATED AS SET FORTH IN SECTION 3.08.E.

E. REINFORCED CONCRETE COLLAR. WHEN SPECIFIED THE CASTING, VERTICAL CHIMNEY SECTION, AND THE TOP 6-INCHES OF THE CORBELLING SHALL BE ENCASED WITH CLASS "C" CONCRETE TO A MINIMUM THICKNESS OF 5-INCHES OVER THE CASTING FLANGE AND 6-INCHES AROUND THE PERIMETER OF THE BRICK AND MORTAR MASONRY CHIMNEY PER THE MR STANDARD DRAWINGS. THE COLLAR SHALL BE REINFORCED WITH TWO CIRCUMFERENTIAL NUMBER FOUR BARS SPACED EQUALLY ALONG THE VERTICAL AXIS, BAR ENDS LAPPED 10-INCHES AND EMBEDDED WITH A MINIMUM CONCRETE COVER OF 2-INCHES AND A MAXIMUM OF 3-INCHES.

F. REHABILITATE BENCH AND CHANNEL. THE ENTIRE BENCH AND CHANNEL AREA SHALL BE RECONSTRUCTED USING THE RAPID STRENGTH PATCHING MORTAR REQUIRED BY THE MANHOLE LINER MANUFACTURER. THE PREPARATION WORK SHALL INCLUDE ALL DEMOLITION OF DETERIORATED CONCRETE AND REMOVAL OF ALL DELETERIOUS MATERIAL FROM THE SURFACES TO BE RECONSTRUCTED AND THE REMOVAL OF SOUND CONCRETE SUCH THAT THE REPAIR MORTAR SHALL NOT BE LESS THAN 1-INCH IN THICKNESS AT ANY POINT AS SHOWN IN THE ATTACHED MANHOLE REHABILITATION DRAWINGS.

IF ACTIVE INFILTRATION IS PRESENT IN THE BENCH AND CHANNEL AREA OF THE MANHOLE, DEWATERING EXTERIOR TO THE MANHOLE WITH A WELL POINT MAY BE REQUIRED IN ORDER TO FACILITATE THE RECONSTRUCTION. THE DEWATERING SHALL CONTINUE FOR A MINIMUM OF 8 HOURS FOLLOWING COMPLETION OF THE BENCH AND CHANNEL REPAIR WORK. DEWATERING WELL POINT, IF ANTICIPATED, WILL BE LISTED AS A PAY ITEM IN THE BID SCHEDULE.

WASTEWATER FLOW SHALL BE MAINTAINED BY METHODS WHICH PREVENT CONTACT WITH ANY OF THE REPAIR WORK FOR A MINIMUM OF 8 HOURS FOLLOWING COMPLETION OF THE REPAIR WORK.

THE WORK ON THE BENCH AND CHANNEL SHALL ALSO INCLUDE THE WORK NECESSARY TO OBTAIN A WATERTIGHT SEAL AT ALL PIPE CONNECTIONS, DROP INLET CONNECTIONS AND BETWEEN THE BASE AND MANHOLE WALLS. THE FLOW LINE THROUGH THE MANHOLE SHALL BE SHAPED TO MATCH THE INVERT OF THE SEWER LINER TO PREVENT ANY FLOW OBSTRUCTIONS IN THE MANHOLE.

G. REPLACE STEPS. THE MANHOLE STEPS SHALL BE REPLACED IN ACCORDANCE WITH THE ATTACHED MANHOLE DRAWINGS AND PER CMSC 711.31. THE STEPS SHALL BE SELECTIVELY PLACED TO POSITION THE STEPS A MINIMUM OF 2-INCHES ABOVE OR BELOW THEIR PREVIOUS LOCATION. THE RECOMMENDED STARTING LOCATION FOR STEP PLACEMENT IS 24-INCHES +/- 2-INCHES BELOW THE TOP OF THE CASTING. HOLES MUST BE CAREFULLY DRILLED SO AS TO MINIMIZE DAMAGE TO MANHOLE LININGS OR SEAL COATS. STEPS SHALL BE SET AT THE PROPER EMBEDMENT DEPTH PER THE MANUFACTURER ALONG WITH AN APPROVED WATER STOPPING SEALANT. THE REHABILITATED WALL SHALL BE CLOSELY INSPECTED FOLLOWING PLACEMENT OF THE NEW STEPS FOR INDICATIONS OF DAMAGE TO THE LINING OR SEAL COAT. REPAIRS SHALL BE AS DIRECTED BY THE ENGINEER. STEP REPLACEMENT SHALL BE NON-PERFORMED AT THE DIRECTION OF ODOT IF THE REHABILITATED MANHOLE DIAMETER WITH THE STEPS WOULD BE INSUFFICIENT FOR FUTURE ACCESS.

H. SITE RESTORATION. THE CONTRACTOR SHALL BE AWARE OF THE CONDITIONS AT EACH MANHOLE SITE. THIS SHALL INCLUDE BUT NOT BE LIMITED TO TREES, SHRUBBERY, LANDSCAPING, STRUCTURES, FENCES, MAIL BOXES, DRIVEWAYS, CURBS, SIDEWALKS, PAVEMENTS, ETC. THE CONTRACTOR SHALL VIDEOTAPE ALL ROE AREAS PRIOR TO USE. ALL PRE-CONSTRUCTION CONDITIONS SHALL BE FULLY RESTORED AS CLOSE TO ITS ORIGINAL CONDITION AS PRACTICABLE.

WHEN WORKING ON PRIVATE PROPERTY, THE CONTRACTOR SHALL OBTAIN ACKNOWLEDGEMENT-OF-COMPLETION (AOC) FROM THE PROPERTY OWNER THAT WORK WAS COMPLETED IN ACCORDANCE WITH THE RIGHT OF ENTRY (ROE) AGREEMENT. NO PAYMENT FOR THIS WORK WILL BE MADE UNTIL THE COPY OF AOC IS SUBMITTED TO THE ENGINEER.

1. MANHOLE SITES THAT ARE LOCATED IN GRASS AREAS SHALL BE BACKFILLED WITH NATIVE SOIL AND THEN SEEDED AND MULCHED PER CMSC 659.09. COST FOR SEEDING AND MULCHING SHALL BE INCLUDED IN THE UNIT BID PRICE FOR REPLACING THE MANHOLE FRAME AND COVER.
2. MANHOLE SITES THAT ARE LOCATED IN PAVEMENT SHALL HAVE THE SURFACE RESTORED IN ACCORDANCE WITH STANDARD DRAWING 1441 DRAWER A. THE CONTRACTOR SHALL REMOVE ALL GASKETED COVERS AND REPLACE THEM WITH A TEMPORARY COVER DURING THE HEAT WELDING PROCESS TO PREVENT THE COVER FROM BONDING TO THE FRAME. COST FOR PAVEMENT REPLACEMENT AND HEAT WELDING SHALL BE INCLUDED IN THE UNIT BID PRICE FOR REPLACING THE MANHOLE FRAME AND COVER.

I. FLEXIBLE CHIMNEY SEALS. THE CONTRACTOR SHALL FIELD MEASURE EACH MANHOLE TO ENSURE PROPER SIZING OF THE CHIMNEY SEAL. THE INTERIOR WALL SURFACES SHALL BE CIRCULAR AND REASONABLY SMOOTH TO PROMOTE A POSITIVE SEAL. IF THE SURFACE IS ROUGH, SLOPED, OR IRREGULAR APPLY NON-SHRINK PATCHING MORTAR TO PREPARE A UNIFORM VERTICAL SURFACE FOR THE SLEEVE TO SEAL AGAINST. ANY FLAWS IN THE MANHOLE FRAME SUCH AS CRACKS, PITS, OR PROTRUSIONS SHALL BE REPAIRED BY EITHER FILLING WITH MORTAR OR GRINDING SMOOTH. INSTALLATION OF THE CHIMNEY SEAL AND EXPANSION BANDS SHALL BE IN ACCORDANCE WITH THE MANUFACTURER'S RECOMMENDATIONS.

3.09 - RE-INSTALLATION (NOT USED)

3.10 - FIELD QUALITY CONTROL

A. VISUAL INSPECTION.

1. PRE-INSPECTION. MANHOLE WALLS AND INVERT SURFACES WILL BE VISUALLY INSPECTED FOR INFILTRATION, VOIDS, ALL FOREIGN MATTER, LOOSE MORTAR, GREASE, OIL RESIDUES, AND DEPOSITS BY THE CITY REPRESENTATIVE PRIOR TO THE CONTRACTOR BEGINNING ANY REHABILITATION. ANY VISIBLE LEAKS SHALL BE STOPPED PER SS-6 AND SS-7 AND ALL LOOSE MATERIAL OR DEPOSITS SHALL BE REMOVED BEFORE WORK BEGINS.
2. POST-INSPECTION. MANHOLE LINING WILL BE VISUALLY INSPECTED FOR WATER TIGHTNESS UPON COMPLETION AND AT ANY TIME DURING WARRANTY PERIOD. ANY VISIBLE LEAKS OR DEFECTS THAT APPEAR SHALL BE REPAIRED TO THE OWNER'S SATISFACTION BY THE CONTRACTOR AT NO ADDITIONAL COST.

B. TESTING REQUIREMENTS.

1. MANHOLE LINER SHALL BE TESTED WITH A WET GAUGE AS DIRECTED BY ODOT'S REPRESENTATIVE TO VERIFY PRESCRIBED THICKNESS. ANY AREA FOUND WITH LESS THAN THE PRESCRIBED THICKNESS SHALL RECEIVE THE ADDITIONAL MATERIAL NEEDED.
2. CEMENTITIOUS LINER. THE CONTRACTOR SHALL CAST THREE (3) 2"X 2" CUBES FOR STRENGTH VERIFICATION FROM EACH DAYS LINER MIX. AFTER FABRICATION, THE TOP OF THE CUBE MOLD IS TO BE COVERED TO PROTECT THE CUBES FROM DIRECT CONTACT WITH MOISTURE AND THEN THEY ARE TO BE STORED INSIDE THE STRUCTURE WHERE FABRICATED FOR 24 HOURS. AFTER 24 HOURS THE SAMPLES ARE TO BE REMOVED FROM THE STRUCTURE AND SUBMITTED TO CMT. CMT WILL THEN TRANSPORT THE CUBES TO AN APPROVED LABORATORY FOR TESTING. THE CUBE SAMPLES WILL BE TESTED PER ASTM C109/C109M AND SHALL MEET THE FOLLOWING COMPRESSIVE STRENGTH REQUIREMENTS:
   A. 2,000 PSI AT 24 HOURS
   B. 8,000 PSI AT 28 DAYS
   ODOT'S RESERVES THE RIGHT TO REQUIRE THE CONTRACTOR TO TAKE CORE SAMPLES AND TO PATCH THE CORED LOCATION AT NO ADDITIONAL COST.
3. POLYMER LINER. THE CONTRACTOR SHALL SPRAY TWO (2) 7"X 7" STAINLESS STEEL PLATES TO A THICKNESS OF 1/2". THE PLATES SHALL BE PREPARED BY APPLYING WAX OR ANOTHER APPROVED RELEASE AGENT TO THEM SO THAT THE PANELS CAN BE EASILY PULLED AWAY WITHOUT DAMAGE. THE SAMPLES ARE TO BE SUBMITTED TO CMT EACH DAY THAT POLYMER LINING IS COMPLETED. CMT WILL THEN TRANSPORT THE PLATE SAMPLES TO AN APPROVED LABORATORY FOR TESTING. THE PLATE SAMPLES WILL BE TESTED PER ASTM D790 AND ASTM D695 AND SHALL MEET THE FOLLOWING FLEXURAL AND COMPRESSIVE REQUIREMENTS:
   A. FLEXURAL MODULUS OF ELASTICITY $\geq$ 730,000 PSI AT 24 HOURS
   B. COMPRESSIVE STRENGTH $\geq$ 15,000 PSI AT 24 HOURS
4. EACH MANHOLE SHALL BE SOUNDED BY THE CONTRACTOR AT SEVEN (7) DAYS. INSPECTOR MUST WITNESS THESE SOUNDINGS PERFORMED BY THE CONTRACTOR. DEFECTS WILL BE CORRECTED BY THE CONTRACTOR PER THE MANUFACTURER'S RECOMMENDATION TO THE SATISFACTION OF THE OWNER.
5. EACH MANHOLE THAT IS LINED WITH THE POLYMER MATERIAL SHALL BE VACUUM TESTED IN ACCORDANCE WITH ASTM C1244.

3.11 - ADJUSTING (NOT USED)

3.12 - CLEANING

A. THE CONTRACTOR SHALL BE RESPONSIBLE FOR CONTAINING AND REMOVAL OF ALL THE REHABILITATION MATERIAL, REBOUND, AND LOOSE MATERIAL CAUSED BY MANHOLE REHABILITATION.

3.13 - DEMONSTRATION (NOT USED)
3.14 - PROTECTION (NOT USED)

3.15 - SCHEDULES

A. THE COST OF SURFACE PREPARATION, FLOW MAINTENANCE, STEP REMOVAL AND REPLACEMENT, WATER PLUG, AND PATCHING MORTAR, SHALL BE INCLUDED IN THE UNIT PRICES BID FOR THE CEMENTITIOUS MANHOLE REHABILITATION.

B. THE ACCEPTED QUANTITIES OF MANHOLE REHABILITATION ITEMS PERFORMED WILL BE PAID AT THE UNIT PRICE FOR EACH RESPECTIVE ITEM OF THE CONTRACT.

C. THE VERTICAL FOOTAGE OF THE MANHOLE LINING MATERIAL SHALL BE MEASURED FROM THE SPRING LINE OF THE PIPE TO A DISTANCE 3" ABOVE THE BOTTOM OF THE MANHOLE CASTING.

ITEM	UNIT	DESCRIPTION
SS-10	EA	REPLACE MANHOLE COVER
SS-10	EA	RAISE MANHOLE COVER TO GRADE
SS-10	EA	REPLACE MANHOLE FRAME AND COVER
SS-10	EA	RAISE MANHOLE FRAME AND COVER TO GRADE
SS-10	VF	RECONSTRUCT MANHOLE TO GRADE
SS-10	VF	MANHOLE LINING
SS-10	EA	REHABILITATE BASE AND CHANNEL
SS-10	EA	FLEXIBLE MANHOLE CHIMNEY SEAL

ITEM 875 - LONGITUDINAL JOINT ADHESIVE

THE CONTRACTOR SHALL APPLY THE JOINT ADHESIVE AT A RATE OF ONE POUND FOR EVERY FOUR FEET OF LONGITUDINAL LENGTH OF THE SURFACE COURSE EDGE AREA IN ACCORDANCE WITH SUPPLEMENTAL SPECIFICATION 875.

THE FOLLOWING ESTIMATED QUANTITY HAS BEEN PROVIDED FOR THIS APPLICATION.

ITEM 875 - LONGITUDINAL JOINT ADHESIVE 14000 LB.

ITEM 503 - COFFERDAMS AND EXCAVATION BRACING, AS PER PLAN

FOR THE PROPOSED STORM SEWER BETWEEN STRUCTURE (32) AND STRUCTURE (13294), THE COFFERDAMS AND EXCAVATION BRACING SHALL BE A SEPARATE PAY ITEM FROM ITEM 611 CONDUIT MISC.: CONDUIT INSTALLED BY THE TRENCHLESS METHOD, 60". IT IS ANTICIPATED THAT THE APPROXIMATE JACKING PIT DIMENSION FOR THE PROPOSED 60" PIPE AT STRUCTURE (32) WILL BE 40'X12' AND AT A APPROXIMATE DEPTH OF 39'. IT IS ANTICIPATED THAT THE APPROXIMATE RECEIVING PIT DIMENSION FOR THE PROPOSED 60" PIPE AT STRUCTURE (13294) WILL BE 25' IN DIAMETER AND AT A APPROXIMATE DEPTH OF 32'.

FOR THE 42" STORM SEWER CONNECTION AT STRUCTURE (28), IN ORDER TO MEET THE MOT REQUIREMENTS ON MOOBERRY STREET A SHORING WALL WILL BE REQUIRED TO SUPPORT THE EXISTING ROADWAY WHILE THIS PIPE IS BEING INSTALLED. THE COST TO DESIGN, SUBMIT, AND CONSTRUCT THIS SHORING WILL BE INCLUDED IN THIS ITEM.

PAYMENT FOR THE ABOVE WORK SHALL BE MADE AT THE LUMP SUM PRICE BID FOR ITEM 503, COFFERDAMS AND EXCAVATION BRACING, AS PER PLAN.

ITEM 611 - CONDUIT MISC: CONDUIT INSTALLED BY THE TRENCHLESS METHOD, 60"

INSTALL THE CONDUIT WITH A TRENCHLESS METHOD THAT PROVIDES HORIZONTAL AND VERTICAL ALIGNMENT ACCORDING TO THE PLAN THAT CONFORMS TO CMS 611. CONDUIT CAN BE INSTALLED BY TRENCHLESS METHODS SUCH AS: JACK AND BORE, TUNNELING, MICROTUNNELING, OR APPROVED EQUAL.

ALL CONDUIT MATERIALS SHALL FIT THE METHOD SELECTED AND MEET ODOT MATERIAL SPECIFICATIONS. ENSURE ALL MATERIAL PROVIDES A 75 YEAR DESIGN SERVICE LIFE. TUNNEL LINER PLATE WILL REQUIRE CONCRETE FIELD PAVING PER CMS 611.

IF FURNISHING A STEEL CASING PIPE TO CONVEY THE STORM WATER, ENSURE IT CONFORMS TO 748.06 WITH A FULL CIRCUMFERENCIAL PENETRATING B-U4B WELD AT THE JOINTS. ALL WELDING IS PERFORMED BY AN ODOT APPROVED FIELD WELDER. HYDROSTATIC TESTING IS NOT REQUIRED FOR THE CASING PIPE.

IF FURNISHING A TUNNEL LINER PLATE, ENSURE THE BASE METAL COMPOSITION, DEPTH AND SPAN OF THE CORRUGATIONS, AND SIZE AND SPACING OF BOLTS AND BOLT HOLES ARE IN ACCORDANCE WITH DETAILS OF THE MANUFACTURER. INSTALLATION OF THE STRUCTURE IS IN ACCORDANCE WITH THE MANUFACTURER'S RECOMMENDATIONS. ENSURE GALVANIZING IS PROVIDED IN ACCORDANCE WITH 707.03 AFTER CORRUGATING, FORMING, AND PUNCHING OF THE PLATES AND BOLT HOLES.

ALTERNATE MATERIALS MAY BE USED CONTINGENT UPON DEPARTMENT APPROVAL.

NO TRENCH EXCAVATION SHALL BE CLOSER THAN 15 FEET TO THE EDGE OF PAVEMENT. PROVIDE ALL NECESSARY DESIGN CALCULATIONS FOR PIPE MATERIALS AND JACKING FORCES AS PART OF THE INSTALLATION PLAN.

ITEM 442 - ANTI-SEGREGATION EQUIPMENT

PROVIDE ANTI- SEGREGATION EQUIPMENT FOR ALL COURSES OF UNIFORM THICKNESS IN ACCORDANCE WITH CMS 401.12, FOR THE FREEWAY AND FREEWAY RAMPS.

PRIVATE UTILITIES ADJUSTED TO GRADE

THE CASTING TOPS OF MANHOLES, VALVE BOXES, AND OTHER STRUCTURES REQUIRING ADJUSTMENT THAT ARE OWNED BY PRIVATE UTILITIES NEED TO BE ADJUSTED TO GRADE BY THEIR RESPECTIVE OWNERS. THE ODOT CONTRACTOR SHALL NOTIFY THE PRIVATE OWNER A MINIMUM OF 14 CALENDAR DAYS IN ADVANCE OF WORK OPERATIONS SO THE WORK MAY BE PROPERLY SCHEDULED. THE ODOT CONTRACTOR IS REQUIRED TO CONTACT THE UTILITY VIA PHONE AND EMAIL AND INCLUDE THE ODOT CONSTRUCTION ENGINEER ON THIS CORRESPONDENCE.

IF ADJUSTMENTS HAVE NOT BEEN COMPLETED 14 CALENDAR DAYS AFTER SCHEDULED, THE ODOT CONTRACTOR WILL NOTIFY THE ODOT PROJECT ENGINEER AND PROVIDE SPECIFIC STATION LOCATIONS AND OWNER INFORMATION. THE ODOT PROJECT ENGINEER WILL WORK WITH THE DISTRICT UTILITY COORDINATOR TO ISSUE AND OBSTRUCTION REMOVAL NOTICE WITHIN 5 DAYS OF RECEIPT WHICH WILL INFORM THE PRIVATE UTILITY TO ADJUST THE STRUCTURES AS NECESSARY OR ODOT WILL AUTHORIZE THE ODOT CONTRACTOR TO ADJUST AS NEEDED AND BILL THE OWNER OF THE FACILITY FOR THE ADJUSTMENT TO THE STRUCTURE.

SHOULD THE CONTRACTOR FAIL TO NOTIFY PRIVATE UTILITIES OF EXISTING MANHOLES, VALVE BOXES, AND OTHER STRUCTURES THAT REQUIRE ADJUSTMENTS TO GRADE, AND COVER THESE WITH THE PROPOSED ASPHALT TREATMENT, THE CONTRACTOR WILL BE REQUIRED TO UNCOVER THE MANHOLES, VALVE BOXES, AND OTHER STRUCTURES AT THEIR OWN EXPENSE SO THAT THE NECESSARY ADJUSTMENTS CAN BE MADE. THE METHOD OF REMOVAL AND REPAIR OF THE ASPHALT SHALL MEET ALL REQUIREMENTS OF THE ODOT ENGINEER AND SHALL BE AT THE CONTRACTORS EXPENSE.

COORDINATION WITH PROPOSED AMERICAN ELECTRIC POWER FACILITIES

AMERICAN ELECTRIC POWER WILL REQUIRE ACCESS TO THE WORK ZONE TO INSTALL MANHOLES AND CONDUIT. THE CONTRACTOR SHALL PROVIDE ACCESS TO AEP AT THE LOCATIONS, AND FOR THE DURATIONS, OUTLINED IN THIS NOTE. THE CONTRACTOR SHALL KEEP ALL EQUIPMENT AND MATERIALS CLEAR OF THE WORK AREAS NEEDED TO INSTALL PROPOSED AEP FACILITIES DURING THESE PERIODS.

THE CONTRACTOR SHALL CONTACT AEP A MINIMUM OF TEN (10) WORKING DAYS PRIOR TO PROVIDING ACCESS TO THE WORK ZONES FOR THEIR INSTALLATIONS. THE TIME PERIOD WILL BEGIN AFTER THE TEN (10) WORKING DAY NOTICE PERIOD HAS ENDED.

PARSONS AVENUE

1) AFTER THE REMOVAL OF THE EXISTING PARSONS AVENUE BRIDGE OVER I-70 EB IS COMPLETE AND BACKFILLED.

2) AFTER THE GRADING AND INSTALLATION OF THE DRAINAGE CONDUIT FOR PARSONS AVENUE AND PRIOR TO THE PREPARATION OF THE SUBGRADE.

UPON COMPLETION OF THE ABOVE LISTED WORK, AEP SHALL BE PROVIDED FIVE (5) WORKING DAYS TO INSTALL PROPOSED CONDUIT BETWEEN THE EXISTING MANHOLE AT STA. 182+10 RT AND THE EXISTING AEP CONDUIT STUB AT STA. 184+00 RT.

MOOBERRY STREET

1) AFTER THE REMOVAL OF THE EXISTING PARSONS AVENUE BRIDGE OVER I-70 EB IS COMPLETE AND BACKFILLED.

2) AFTER THE GRADING FOR REALIGNED MOOBERRY STREET AND INSTALLATION OF THE DRAINAGE CONDUIT IS COMPLETE AND PRIOR TO THE PREPARATION OF THE SUBGRADE.

UPON COMPLETION OF THE ABOVE LISTED WORK, AEP SHALL BE PROVIDED TWENTY (20 WORKING DAYS TO INSTALL PROPOSED CONDUIT AND MANHOLES BETWEEN THE EXISTING AEP MANHOLE AT STA. 182+10 RT (PARSONS AVE.) AND THE EXISTING AEP MANHOLE AT STA. 691+60 RT. (AMBULANCE DR.)

MOOBERRY STREET

1) AFTER THE REMOVAL OF THE VACANT AEP CONDUIT (STA. 900+94.00 LT. TO STA. 902+84.00) AND AFTER THE INSTALLATION OF THE PROPOSED STORM SEWER (STA. 900+94.22 LT. TO STA. 902+83.41 LT.)

UPON COMPLETION OF THE ABOVE LISTED WORK, AEP SHALL BE PROVIDED FIIFTEEN (15) WORKING DAYS TO INSTALL PROPOSED CONDUIT BETWEEN THE EXISTING AEP CONDUIT STUB AT STA. 900+94.00 LT AND THE EXISTING AEP CONDUIT STUB AT STA. 902+84.00 LT.

PLOT.CEL
ms consultants, inc.
msconsultants.com
www.msconsultants.com
34" x 22"
Model: Sheet View: SHEET
Printed: 2/13/2019 @ 6:09:53 PM By: hbrendlinger
File: \\msconsultants.com\files\Production\03\60\06634_2E\roadway\sheets\105322GN018.dgn
Batchplot Spec: \\msconsultants.com\files\production\03\60\06634_2E\standards\plotdrv\batchplt.spc
Pen Table: \\msconsultants.com\files\Production\03\60\06634_2E\deliverables\2019-02-11 ADDENDUM CLOUDS\V8i_ms_std.tbl
Plot Driver: \\msconsultants.com\files\Standards\ustn\ohdot\v8i\ms\plotting\PDF.pltcfg
Ohio DOT Workspace
70/71 East Interchange 2E
PID: 105322_2E_Columbus
ms consultants, inc.

PLOT.CEL

ms consultants, inc.
msconsultants.com

Ohio DOT Workspace
70\71 East Interchange 2E
www.msconsultants.com

0 0.5" 1"

UCF: ohdotV8i
PCF: 60-06634_2E_Columbus

Batchplot Spec: \\msconsultants.com\files\production\03\60\06634_2E\standards\plotdrv\batchplt.spc
Pen Table: \\msconsultants.com\files\Standards\ustn\ohdot\V8i\ms\plotting\pen\V8i_ms_std.tbl
Plot Driver: \\msconsultants.com\files\Standards\ustn\ohdot\v8i\ms\plotting\PDF.pltcfg

34" x 22"

Model: Sheet View: FENCE_VIEW1
Printed: 9/28/2018 @ 10:05:05 AM By: kryan
File: N:\03\60\06634_2E\mot\sheets\105322MN0001.dgn

ITEM 614 - MAINTAINING TRAFFIC

TEMPORARY TRAFFIC CONTROL ITEMS - CITY OF COLUMBUS

THE FOLLOWING NOTES ARE APPLICABLE TO CITY STREETS ONLY:

1. ALL TEMPORARY TRAFFIC CONTROL (TTC) DEVICES SHALL BE FURNISHED, ERECTED, MAINTAINED AND REMOVED BY THE CONTRACTOR IN ACCORDANCE WITH THE OHIO MANUAL OF UNIFORM TRAFFIC CONTROL DEVICES FOR STREETS AND HIGHWAYS (CURRENT EDITION). COPIES ARE AVAILABLE FROM THE OHIO DEPARTMENT OF TRANSPORTATION, OFFICE OF CONTRACTS, 1980 WEST BROAD STREET, COLUMBUS, OHIO 43216. NOTE: ALL DEVICES SHALL COMPLY, FOR CONDITION AND LOCATION, WITH THE CURRENT EDITION OF THE NCHRP 350 CRASH TESTING GUIDELINES.

2. CONSTRUCTION OPERATIONS SHALL NOT BEGIN UNTIL ALL TRAFFIC CONTROL IS IN PLACE AND APPROVED BY THE DIVISION OF DESIGN AND CONSTRUCTION INSPECTOR. IF THE CONTRACTOR DOES NOT COMPLY WITH THE STANDARDS, INCLUDING THE INSTALLATION OF TEMPORARY PAVEMENT MARKINGS AND THE REMOVAL OF CONFLICTING TRAFFIC CONTROLS, THEIR PERMIT SHALL BE REVOKED AND ALL WORK SHALL BE TERMINATED. TEMPORARY PAVEMENT MARKINGS TO INCLUDE, BUT NOT LIMITED TO, CHANNELIZING LINES, EDGE LINES, AND CENTERLINES SHALL BE INSTALLED AND MAINTAINED ON ALL CONSTRUCTION OPERATIONS LASTING A MINIMUM OF 14 CALENDAR DAYS OR AS DIRECTED BY THE TEMPORARY TRAFFIC CONTROL COORDINATOR OR THE PROJECT ENGINEER.

3. PORTABLE CHANGEABLE MESSAGE SIGNS (PCMS) SHALL BE INSTALLED A MINIMUM OF 7 DAYS PRIOR TO CLOSURE OF A ROADWAY. THE MESSAGE SHALL ADVISE THE MOTORIST OF THE DATES, TIMES, AND DURATION OF THE CLOSURE. THE PCMS SHALL REMAIN IN PLACE FOR 7 DAYS AFTER THE START OF THE CLOSURE.

4. A TTC PLAN (TTCP) INCLUDING PEDESTRIAN CONTROL SHALL BE SUBMITTED TO THE TTC COORDINATOR AT 645-6269 OR 645-5845 AT THE PRE-CONSTRUCTION MEETING OR A MINIMUM OF TEN (10) WORKING DAYS PRIOR TO BEGINNING WORK. COPIES OF THE APPROVED TTCP SHALL BE GIVEN TO THE PROJECT ENGINEER AND KEPT ON SITE ALONG WITH THE STREET CLOSURE/OCCUPANCY PERMIT.

5. TYPE C STEADY-BURN OR TYPE D 360-DEGREE STEADY-BURN WARNING LIGHTS SHALL BE REQUIRED ON ALL BARRICADES, DRUMS, AND SIMILAR TRAFFIC CONTROL DEVICES IN USE AT NIGHT. ONLY 42" REFLECTORIZED CHANNELIZING DEVICES (CONES) SHALL BE PERMITTED FOR NIGHTTIME WORK WITH THE APPROVAL OF THE TTC COORDINATOR AT 645-6269 OR 645-5845 PER O.D.O.T. STANDARDS.

6. A FLASHING ARROW PANEL (48" X 96"-TYPE C) SHALL BE USED IN LANE CLOSURES AS PER THE OHIO MANUAL.

7. ALL TRENCHES WITHIN THE ROAD RIGHT-OF-WAY SHALL BE BACKFILLED OR SECURELY PLATED PER (CITY OF COLUMBUS GENERAL POLICY ON STEEL PLATE USAGE DATED 11/15/2006 AND 2007 STD. DWG. 1441) DURING NON-WORKING HOURS.

8. ACCESS FOR PEDESTRIAN AND VEHICULAR TRAFFIC TO ALL ADJOINING PROPERTIES SHALL BE MAINTAINED AT ALL TIMES.

9. THE DIVISION OF PLANNING AND OPERATIONS WILL COVER ALL PARKING METER HEADS PUT OUT OF SERVICE BY THIS PROJECT. PARKING METERS TO BE REMOVED OR REMOVED AND REINSTALLED ARE COVERED SEPARATELY UNDER ITEM 202 - REMOVAL MISC.: PARKING METER POST REMOVED, AS PER PLAN (SEE SHEET 82). THE CONTRACTOR WILL SUPPLY A PLAN WITH THE LOCATION FOR THE METER HEADS TO BE BAGGED AND WILL NEED TO INDICATE THE DURATION OF TIME THAT THE METERS WILL BE OUT OF SERVICE. A DAILY METER FEE WILL BE CHARGED FOR ALL ENFORCEMENT HOURS FOR EACH METER TAKEN OUT OF SERVICE. SEE NOTE 20 ON THIS SHEET FOR ESTIMATING PARKING METER FEES. THESE CHARGES WILL BE COLLECTED FROM THE CONTRACTOR IN ADVANCE WITH THE ISSUANCE OF THE STREET OCCUPANCY/EXCAVATION PERMIT FROM THE DIVISION OF PLANNING AND OPERATIONS' PERMIT OFFICE ((614)-645-7497). THE MANAGER OF PARKING SERVICES SUPPORT ((614)-645-7890) SHALL BE NOTIFIED A MINIMUM OF FORTY-EIGHT (48) HOURS (EXCLUDING SAT, SUN, & HOLIDAYS) PRIOR TO BEGINNING WORK. CALL (614)-645-8376 IF UNABLE TO MAKE CONTACT THROUGH THE PRIOR PHONE NUMBER.

10.TEMPORARY "EMERGENCY NO PARKING" SIGNS SHALL BE INSTALLED AT 50' C/C MINIMUM BY USE OF DRUMS AND REMOVED BY THE CONTRACTOR IN AREAS WITH NO PARKING METERS. THE SIGNS SHALL HAVE THE INSTALLATION DATE, WORKING DATES, AND HOURS OF RESTRICTION SHOWN ON EACH SIGN. THESE SIGNS MAY BE OBTAINED FROM THE DIVISION OF PLANNING AND OPERATIONS' PERMIT OFFICE. THE POLICE DIVISION REQUIRES THE "EMERGENCY NO PARKING" SIGNS BE POSTED A MINIMUM OF SEVENTY-TWO (72) HOURS PRIOR TO ANY VEHICLES BEING TOWED. WITHIN TWENTY-FOUR (24) HOURS OF POSTING, THE CONTRACTOR SHALL SUPPLY THE DIVISION OF DESIGN AND CONSTRUCTION WITH A WRITTEN RECORD OF POSTED LOCATIONS (FAX: 645-3298).

11.TRAFFIC OPERATIONS PERSONNEL SHALL LOCATE AND MARK ALL UNDERGROUND TRAFFIC CONTROL CABLES. THE TRAFFIC OPERATIONS SHOP SHALL BE NOTIFIED 645-7393 (FAX 645-5967) AT LEAST FORTY-EIGHT (48) HOURS (EXCLUDING SAT. & SUN.) PRIOR TO THE BEGINNING OF ANY WORK WITHIN 450 FEET OF ANY SIGNALIZED INTERSECTION(S) OR WITHIN ANY POSTED AREA WHERE THE DIVISION HAS UNDERGROUND CABLE. THE SIGNAL OPERATION ENGINEER (645-6418) SHALL BE NOTIFIED SIX (6) WEEKS IN ADVANCE FOR SIGNAL REVISIONS OR POLE RELOCATIONS.

12.NO EXCAVATION SHALL BE MADE WITHIN FIVE (5) FEET OF ANY POLE THAT SUPPORTS TRAFFIC SIGNAL DISPLAYS OR SIGNS BY MAST ARM OR SIGNAL SPAN. EXCAVATION WITHIN EIGHT (8) FEET, BUT MORE THAN FIVE (5) FEET SHALL REQUIRE ADDITIONAL SUPPORT (DOWN GUY, HEAD GUY, BASE GUY, ETC.). THE CONTRACTOR SHALL CONTACT SIGNAL OPERATION PERSONNEL AT 645-0423(CELL 419-4501) AT LEAST FORTY-EIGHT (48) HOURS (EXCLUDING SAT. & SUN.) PRIOR TO THE BEGINNING OF SUCH EXCAVATION SO THAT THE CITY CAN APPROVE THE STABILIZATION SETUP BY THE CONTRACTOR. IF UNABLE TO MAKE CONTACT THROUGH ABOVE NUMBERS, CALL 645-7393. STABILIZATION WILL BE DONE BY THE CONTRACTOR AT THE OWNERS'/CONTRACTING AGENCY'S EXPENSE.

13.WHEN ANY TRAFFIC CONTROL DEVICE, CONDUIT, OR CABLE IS DAMAGED, THE CONTRACTOR SHALL NOTIFY SIGNAL OPERATION PERSONNEL AT 645-0423 (CELL 419-4501) BETWEEN 7:00 AM AND 4:00 PM, MONDAY THROUGH FRIDAY. IF UNABLE TO MAKE CONTACT THROUGH THE OTHER NUMBERS, CALL 645-7393.

14. THE ROADWAY SHALL NOT BE OPENED TO NON-CONSTRUCTION TRAFFIC UNTIL THE CRITICAL PERMANENT TRAFFIC CONTROLS ARE IN PLACE, OR UNTIL TEMPORARY TRAFFIC CONTROLS APPROVED BY THE ENGINEER, ARE INSTALLED. THE CRITICAL PERMANENT TRAFFIC CONTROLS ARE STOP, YIELD, ONE WAY, DO NOT ENTER AND RESTRICTED TURN SIGNS. OTHER CRITICAL SIGNS MAY BE NOTED ON THE PLANS AS WELL. THE CONTRACTOR ASSUMES ALL LIABILITY FOR THE PREMATURE REMOVAL OF TEMPORARY TRAFFIC CONTROLS.

15. THE ROADWAY OR ANY SECTION OF ROADWAY SHALL NOT BE OPENED TO NON-CONSTRUCTION TRAFFIC UNTIL ALL TEMPORARY, NON-REFLECTIVE, BLACKOUT TAPE HAS BEEN COMPLETELY REMOVED FROM NON-CONFLICTING PERMANENT PAVEMENT MARKINGS FOR THAT AREA OF THE ROADWAY, OR UNLESS OTHERWISE DIRECTED IN WRITING BY THE ENGINEER. THIS IS SUPPLEMENTAL TO CMS-614.11-F, AND SHALL BE PAID FOR THROUGH THE 614-LUMP SUM.

16. THE CONTRACTOR SHALL MAINTAIN ALL PERMANENT TRAFFIC CONTROLS NOT IN CONFLICT WITH THE TEMPORARY TRAFFIC CONTROLS THROUGHOUT THIS PROJECT. PERMANENT TRAFFIC CONTROLS MAY BE TEMPORARILY RELOCATED OR COVERED, AS APPROVED BY THE ENGINEER. THE CONTRACTOR SHALL ASSUME ALL LIABILITY FOR MISSING, DAMAGED, OR IMPROPERLY PLACED SIGNS.

17. ANY WORK DONE BY THE DIVISION OF PLANNING AND OPERATIONS, INCLUDING INSTALLATION, RELOCATION, REMOVAL AND/OR REPLACEMENT OF TEMPORARY TRAFFIC CONTROL DEVICES AS A RESULT OF WORK DONE BY THE CONTRACTOR OR AS A RESULT OF NEGLIGENCE OF THE CONTRACTOR, SHALL BE AT THE CONTRACTORS' EXPENSE.

18. WHENEVER YELLOW CENTERLINES OR TURN-LANE LINES ARE PAVED OVER, REMOVED, OR OTHERWISE UNSERVICEABLE, THE CONTRACTOR SHALL INSTALL CLASS II TEMPORARY STRIPING (MINIMUM 4' LONG SEGMENTS). TEMPORARY PAINT SHALL BE USED ON ALL MILLED SURFACES. ON CITY STREETS, TEMPORARY TAPE SHALL BE USED ON ALL FINAL COURSES OF ASPHALT; PAINT OR TAPE MAY BE USED ON INTERMEDIATE COURSES OF ASPHALT. IF APPROVED BY THE ENGINEER, DRUMS WITH STEADY BURNING TYPE C OR TYPE D 360 DEGREE WARNING LIGHTS AND "KEEP RIGHT" SIGNS MAY BE SUBSTITUTED FOR CENTERLINE MARKINGS.

19. CLASS II TEMPORARY STRIPING (MINIMUM 4' LONG SEGMENTS) SHALL BE AS PER ITEM 614 - WORK ZONE PAVEMENT MARKING AND SHALL BE PLACED WITHIN ONE (1) FOOT LONGITUDINAL TOLERANCE OF THE PERMANENT STRIPE(S). ALL TEMPORARY STRIPING NOT TO WITHIN ONE (1) FOOT TOLERANCE SHALL BE REMOVED AND REPLACED IN THE PROPER LOCATION BY THE CONTRACTOR. CLASS II TEMPORARY STRIPING SHALL BE OF THE APPROPRIATE COLOR AND SPACED A MAXIMUM OF FORTY (40) FEET CENTER TO CENTER.

20. TO CALCULATE AN ESTIMATE FOR THE LOST METER REVENUE, VISIT THE METER MAP AT HTTPS://WWW.COLUMBUS.GOV/PARKINGMETERMAP.ASPX. FIND THE REQUESTED METER(S) ON THE MAP AND CLICK ON THE "P" SYMBOL. THERE WILL BE THE METER NUMBER, THE DURATION OF THE METER, AND THE HOURS OF OPERATION. ONCE DETERMINING THE DURATION OF THE METER, VISIT HTTPS://WWW.COLUMBUS.GOV/PUBLICSERVICE/PARKING/PARKING-METERS/ TO DETERMINE THE HOURLY METER RATE. TO DETERMINE THE DAILY LOST METER REVENUE, MULTIPLE THE HOURLY RATE TIMES THE NUMBER OF HOURS THE METER IS IN OPERATION EACH DAY.

EXAMPLE: A THREE (3) HOUR METER IS $0.75 PER HOUR AND IS IN OPERATION 14 HOURS PER DAY. THE DAILY LOST METER REVENUE IS $10.50 PER DAY (14 HOURS X $0.75 PER HOUR = $10.50 PER DAY).

ALL METERS ARE FREE ON SUNDAY AND CITY RECOGNIZED HOLIDAYS, SO THOSE DAYS DO NOT NEED TO BE INCLUDED IN THE CALCULATION. THE FOLLOWING ARE CITY RECOGNIZED HOLIDAYS: NEW YEAR'S DAY, MARTIN LUTHER KING DAY, PRESIDENTS' DAY, MEMORIAL DAY, INDEPENDENCE DAY, LABOR DAY, VETERANS DAY, THANKSGIVING DAY, AND CHRISTMAS DAY. ALL RATES ARE SUBJECT TO CHANGE BY THE CITY OF COLUMBUS.

THE METERS IDENTIFIED BELOW ARE REQUIRED TO BE OUT OF SERVICE FOR CONSTRUCTION PER THE MAINTENANCE OF TRAFFIC PLAN:

PHASE 4B FULTON ST. - STEP 2
THE FOLLOWING ELEVEN EXISTING TO REMAIN METERS ON THE SOUTH SIDE OF FULTON ST. WEST OF THIRD ST. WILL BE REQUIRED TO BE OUT OF SERVICE DURING MILLING, OVERLAY AND PAVEMENT MARKING APPLICATIONS TO CONVERT FULTON ST. FROM HIGH ST. TO THIRD ST. ONE WAY EASTBOUND: EA23, EA25, EA27, EA29, EA31, EA33, EA35, EA37, EA39, EA41, AND EA43.

THIS COST IS TO BE INCLUDED IN THE BID FOR THIS PROJECT AS A PART OF ITEM 614 MAINTENANCE OF TRAFFIC, LUMP SUM.

EXISTING PERMANENT TRAFFIC CONTROL ITEMS - CITY OF COLUMBUS

THE FOLLOWING NOTES ARE APPLICABLE TO CITY STREETS ONLY:

1. ALL OVERHEAD CABLE, DOWN GUYS OR BACK GUYS SHALL NOT BLOCK ANY PORTION OF A TRAFFIC SIGNAL, TRAFFIC CONTROL SIGN, OR OTHER TRAFFIC CONTROL DEVICE SUCH THAT VISIBILITY OR OPERATION OF THE TRAFFIC CONTROL DEVICE IS IMPAIRED.

2. ALL PERMANENT PAVEMENT MARKINGS AND TRAFFIC CONTROL SIGNS AS SHOWN ON THIS PLAN SHALL BE INSTALLED BY THE CONTRACTOR AT THE PROJECTS EXPENSE. THE PROJECT ENGINEER SHALL BE NOTIFIED TO DIRECT APPROPRIATE PERSONNEL A MINIMUM OF FORTY-EIGHT (48) HOURS (EXCLUDING SAT. & SUN.) PRIOR TO THE INSTALLATION OF PERMANENT MARKINGS TO INSPECT AND APPROVE THE PAVEMENT MARKING LAYOUT PRIOR TO PLACING THE PERMANENT MARKINGS.

3. THE CONTRACTOR SHALL BE RESPONSIBLE FOR REINSTALLATION AND/OR REPLACEMENT OF ALL PERMANENT TRAFFIC CONTROL DEVICES DAMAGED OR REMOVED DURING CONSTRUCTION. PERMANENT TRAFFIC CONTROL NO LONGER IN CONFLICT WITH TEMPORARY TRAFFIC CONTROL SHALL BE REPLACED IMMEDIATELY.

4. PERMANENT STRIPING OR CLASS I TEMPORARY STRIPING SHALL BE INSTALLED NO LATER THAN FOURTEEN (14) CALENDAR DAYS AFTER THE FINAL PAVING COURSE IS COMPLETED. THE PAVING CONTRACTOR SHALL BE RESPONSIBLE TO NOTIFY THE STRIPING CONTRACTOR TO INSURE THE PERMANENT STRIPING IS INSTALLED WITHIN THE FOURTEEN (14) CALENDAR DAY LIMIT.

ms consultants, inc.

PLOT.CEL
ms consultants, inc.
msconsultants.com
www.msconsultants.com
Ohio DOT Workspace
70\71 East Interchange 2E
UCF: ohdotV8i
PCF: 60-06634_2E_Columbus
Batchplot Spec: \\msconsultants.com\files\production\03\60\06634_2E\standards\plotdrv\batchplt.spc
Pen Table: \\msconsultants.com\files\Standards\ustn\ohdot\V8i\ms\plotting\pen\V8i_ms_std.tbl
Plot Driver: \\msconsultants.com\files\Standards\ustn\ohdot\v8i\ms\plotting\PDF.pltcfg
34" x 22"
Model: Sheet View: SHEET
Printed: 1/10/2019 @ 4:10:06 PM By: dhall
File: \\msconsultants.com\files\Production\03\60\06634_2E\mot\sheets\105322MN0002.dgn

COORDINATION WITH LOCAL FACILITIES

THE CONTRACTOR SHALL COORDINATE WORK WITH COUNTY FACILITIES IN THE AREA AS WELL AS THE COLUMBUS FIRE STATION TO MAINTAIN PROPER INGRESS/EGRESS AT ALL TIMES.

COORDINATION WITH ADJACENT PROJECTS

THE CONTRACTOR SHALL COORDINATE WORK WITH ODOT AND THE CONTRACTORS ON THE FOLLOWING ADJACENT PROJECTS:

- CITY OF COLUMBUS LIVINGSTON AVE. PROJECT

- NATIONWIDE CHILDREN'S HOSPITAL CAMPUS EXTENSION PROJECT

- FRA-71-17.46 (PROJECT 3B)

- FRA-70-13.1 (BRIDGE DECK REPLACEMENT)

- FRA-70/71-12.68/15.16 (PROJECT 4R)

- ODOT I-70 EAST FREEWAY RESUFACING

COORDINATION SHALL BE MADE TO PREVENT CONFLICTING ADVANCE WARNING SIGNS, CONFLICTING DETOUR ROUTES, OVERLAPPING/CONFLICTING LANE CLOSURES, AND TO ENSURE THAT A MINIMUM DISTANCE OF 2 MILES BETWEEN ADJACENT LANE CLOSURES IS MAINTAINED. THIS IS NOT AN EXHAUSTIVE LIST OF COORDINATION ITEMS THAT MAY NEED TO BE RESOLVED BETWEEN PROJECTS. THE DEPARTMENT RESERVES THE RIGHT TO DECIDE WHICH PROJECT'S ACTIVITIES TAKE PRECEDENCE. PROJECTS THAT HAVE ACTIVITIES DELAYED DUE TO CONFLICTS WILL CONSIDER THIS AN EXCUSABLE, NON-COMPENSABLE DELAY PER 108.06.B. ON PROJECTS THAT HAVE ACTIVITIES DELAYED DUE TO CONFLICTS WHERE THE CONTRACTOR FAILED TO MEET THE NOTIFICATION REQUIREMENTS, THE DELAYS SHALL NOT BE CONSIDERED EXCUSABLE OR COMPENSABLE.

ATTENDANCE AT DEPARTMENT ORDERED TRAFFIC COORDINATION MEETINGS BETWEEN ADJACENT PROJECTS SHALL BE CONSIDERED MANDATORY FOR EACH PROJECT'S SUPERINTENDENT AND WORKSITE TRAFFIC SUPERVISOR (WTS), AND INCIDENTAL TO THE LUMP SUM MAINTENANCE OF TRAFFIC PAYMENT ITEM.

ITEM 614 - MAINTAINING TRAFFIC

1. CONSTRUCTION OPERATIONS SHALL NOT BEGIN UNTIL ALL TRAFFIC CONTROL IS IN PLACE AND APPROVED BY ODOT PERSONNEL. THE CONSTRUCTION INSPECTOR SHALL APPROVE ALL TEMPORARY TRAFFIC CONTROL DEVICES FOR CONDITION AND LOCATION BEFORE THE CONTRACTOR WILL BE ALLOWED TO BEGIN WORK. IF THE CONTRACTOR DOES NOT COMPLY WITH THE STANDARDS, HIS PERMIT SHALL BE REVOKED AND ALL WORK SHALL BE TERMINATED.

2. ALL SIGNS, BARRICADES, SIGN SUPPORTS, DRUMS, FLAGGERS, WORK ZONE TRAFFIC SIGNALS AND INCIDENTALS FOR TRAFFIC CONTROL SHALL BE FURNISHED, ERECTED, MAINTAINED AND REMOVED BY THE CONTRACTOR IN CONFORMANCE WITH THE MOST RECENT REVISION, CURRENT EDITION OF THE OHIO MANUAL OF UNIFORM TRAFFIC CONTROL DEVICES FOR STREETS AND HIGHWAYS (OMUTCD). ALL SIGNS USED FOR THE MAINTENANCE OF TRAFFIC SHALL BE NEW OR LIKE NEW CONDITION SUBJECT TO THE APPROVAL OF THE ENGINEER. DEVICES USED TO MAINTAIN TRAFFIC SHALL BE REMOVED IMMEDIATELY AFTER THE TERMINATION OF SAID WORK. PAYMENT SHALL BE INCLUDED IN THE LUMP SUM BID FOR ITEM 614 MAINTAINING TRAFFIC.
TRAFFIC.

3. FOR WORK WHICH IS CONFINED TO THE SHOULDER, TRAFFIC CONTROL SHALL CONFORM TO FIGURES TA-1, TA-3, TA-4, TA-5 AND TA-6 OF THE OHIO MANUAL OF UNIFORM TRAFFIC CONTROL DEVICES (OMUTCD). IF THE CONTRACTOR FAILS TO COMPLY WITH THE PROVISIONS FOR TRAFFIC CONTROL AS SET FORTH IN THESE PLANS AND PROVISIONS OF THE OMUTCD AND THE FAILURE RESULTS IN A CONDITION AT THE WORK SITE WHICH IS UNSAFE FOR TRAFFIC, THE ENGINEER HAS THE AUTHORITY TO SUSPEND WORK UNTIL THE CONTRACTOR COMPLIES WITH THE NECESSARY REQUIREMENTS.

4. STREET NAME SIGNS SHALL BE PROVIDED AT ALL TIMES DURING CONSTRUCTION WHERE THEY CURRENTLY EXIST. STREET NAME SIGNS SHALL BE MOUNTED ON EXISTING, TEMPORARY OR PROPOSED SUPPORTS IN A LOCATION THAT IS CLEARLY VISIBILE TO TRAFFIC.

NOTIFICATION OF CONSTRUCTION INITIATION

AT LEAST FOURTEEN DAYS PRIOR TO STARTING INITIAL CONSTRUCTION ACTIVITIES, THE CONTRACTOR SHALL ADVISE THE DISTRICT OFFICE OF COMMUNICATIONS VIA EMAIL AT d06.pio@dot.state.oh.us, THE DISTRICT WORK ZONE TRAFFIC MANAGER VIA EMAIL AT d06.mot@dot.state.oh.us AND THE CENTRAL OFFICE SPECIAL HAUL PERMITS SECTION BY FAX AT (614)728-4099 OF THE ANTICIPATED START DATE OF ANY CONSTRUCTION ACTIVITIES INCLUDING BUT NOT LIMITED TO THE PLACING OF WORK ZONE SIGNS. THE NOTIFICATION SHALL ALSO INCLUDE THE PROJECT NUMBER, PID, NAME AND PHONE NUMBER OF THE CONTRACTOR, A POINT OF CONTACT AND THE ANTICIPATED IMPACT ON TRAFFIC. THE CONTRACTOR WILL IMMEDIATELY INFORM THE DISTRICT OFFICE OF COMMUNICATIONS AND THE DISTRICT WORK ZONE TRAFFIC MANAGER OF ANY AND ALL DELAYS AND/OR CHANGES REGARDING THE CONSTRUCTION INITIATION DATE.

FREEWAY LANES OPEN DURING HOLIDAYS OR SPECIAL EVENTS

NO WORK SHALL BE PERFORMED AND ALL MOT LANES AND RAMPS SHALL BE OPEN TO TRAFFIC DURING THE FOLLOWING DESIGNATED HOLIDAYS:

CHRISTMAS
NEW YEARS
MEMORIAL DAY
FOURTH OF JULY
LABOR DAY
THANKSGIVING

THE PERIOD OF TIME THAT THE LANES ARE TO BE OPEN DEPENDS ON THE DAY OF THE WEEK ON WHICH THE HOLIDAY FALLS. THE FOLLOWING SCHEDULE SHALL BE USED TO DETERMINE THIS PERIOD:

DAY OF HOLIDAY	TIME ALL LANES MUST BE OPEN TO TRAFFIC
SUNDAY	12:00N FRIDAY THROUGH 5:00 AM MONDAY
MONDAY	12:00N FRIDAY THROUGH 5:00 AM TUESDAY
TUESDAY	12:00N MONDAY THROUGH 5:00 AM WEDNESDAY
WEDNESDAY	12:00N TUESDAY THROUGH 5:00 AM THURSDAY
THURSDAY	12:00N WEDNESDAY THROUGH 5:00 AM FRIDAY
THURSDAY (THANKSGIVING ONLY)	5:00 AM WEDNESDAY THROUGH 5:00 AM MONDAY
FRIDAY	12:00N THURSDAY THROUGH 5:00 AM MONDAY
SATURDAY	12:00N FRIDAY THROUGH 5:00 AM MONDAY

SPECIAL EVENTS

OHIO STATE FAIR - LANE AND SHOULDER CLOSURES ON I-71 BETWEEN I-70 AND SR 161 AND RAMP CLOSURES TO AND FROM 11TH AVENUE AND 17TH AVENUE ARE NOT PERMITTED DURING FAIR HOURS FROM 2 HOURS PRIOR TO GATES OPENING TO 2 HOURS FOLLOWING THE END OF THE LAST EVENT INCLUDING BUT NOT LIMITED TO RELATED CONCERTS.

CREW STADIUM EVENTS WITH EXPECTED ATTENDANCE OVER 10,000 - LANE AND SHOULDER CLOSURES ON I-71 BETWEEN I-70 AND SR 161 AND RAMP CLOSURES TO AND FROM 11TH AVENUE AND 17TH AVENUE ARE NOT PERMITTED FROM 2 HOURS PRIOR TO START OF THE EVENT (INBOUND AND OUTBOUND) TO 2 HOURS FOLLOWING THE CONCLUSION OF THE EVENT (OUTBOUND ONLY).

GOOD GUYS NATIONAL & QUARTERHOUSE CONGRESS - LANE AND SHOULDER CLOSURES ON I-71 BETWEEN I-70 AND SR 161 AND RAMP CLOSURES TO AND FROM 17TH AVENUE ARE NOT PERMITTED DURING SCHEDULED EVENT HOURS INCLUDING 2 HOURS PRIOR TO SCHEDULED EVENT HOURS.

RED, WHITE AND BOOM - DURING THE SCHEDULED EVENT HOURS (12PM ON JULY 3 TO 1AM ON JULY 4) NO WORK SHALL BE PERFORMED AND ALL AVAILABLE LANES SHALL BE OPEN TO TRAFFIC AT THE FOLLOWING LOCATIONS:
- FOURTH STREET
- GRANT AVENUE
- THIRD STREET
- FULTON STREET
- MOUND STREET
- I-70 FROM SR 315 TO ALUM CREEK DR
- I-71 FROM I-70 TO MORSE RD

NO EXTENSIONS OF TIME SHALL BE GRANTED FOR DELAYS IN MATERIAL DELIVERIES, UNLESS SUCH DELAYS ARE INDUSTRY-WIDE, OR FOR LABOR STRIKES, UNLESS SUCH STRIKES ARE AREA-WIDE.

SHOULD THE CONTRACTOR FAIL TO MEET ANY OF THESE REQUIREMENTS, THE CONTRACTOR SHALL BE ASSESSED A DISINCENTIVE IN THE AMOUNT OF $200/LANE FOR EACH MINUTE THE ABOVE DESCRIBED LANE CLOSURE RESTRICTIONS ARE VIOLATED.

NOTIFICATION OF TRAFFIC RESTRICTIONS

THROUGHOUT THE DURATION OF THE PROJECT, THE CONTRACTOR SHALL NOTIFY THE PROJECT ENGINEER IN WRITING OF ALL TRAFFIC RESTRICTIONS AND UPCOMING MAINTENANCE OF TRAFFIC CHANGES. THE CONTRACTOR SHALL ENSURE THE WRITTEN NOTIFICATION IS SUBMITTED IN A TIMELY MANNER TO ALLOW THE PROJECT ENGINEER TO MEET THE REQUIRED TIME FRAMES SET FORTH IN THE TABLE BELOW TO INFORM SPECIAL HAULING PERMITS SECTION (HAULING.PERMITS@DOT.OHIO.GOV) AND THE DISTRICT PUBLIC INFORMATION OFFICE (PIO). THIS NOTIFICATION SHALL BE RECEIVED BY THE PROJECT ENGINEER PRIOR TO THE PHYSICAL SETUP OF ANY APPLICABLE SIGNS OR MESSAGE BOARDS.

INFORMATION SHOULD INCLUDE BUT IS NOT LIMITED TO ALL CONSTRUCTION ACTIVITIES THAT IMPACT OR INTERFERE WITH TRAFFIC AND SHALL LIST THE SPECIFIC LOCATION, TYPE OF WORK, ROAD STATUS, DATE AND TIME OF RESTRICTION, DURATION OF RESTRICTION, NUMBER OF LANES MAINTAINED, NUMBER OF LANES CLOSED, MINIMUM VERTICAL CLEARANCE, MINIMUM WIDTH OF DRIVABLE PAVEMENT, DETOUR ROUTES IF APPLICABLE, AND ANY OTHER INFORMATION REQUESTED BY THE PROJECT ENGINEER.

NOTIFICATION TIME FRAME TABLE			
ITEM	DURATION OF CLOSURE	NOTIFICATION DUE TO DISTRICT 6 COMMUNICATIONS OFFICE	SIGN DISPLAYED TO PUBLIC
RAMP AND ROAD CLOSURES	>= 2 WEEKS	21 CALENDAR DAYS PRIOR TO CLOSURE	14 CALENDAR DAYS PRIOR TO CLOSURE
	> 12 HOURS AND < 2 WEEKS	14 CALENDAR DAYS PRIOR TO CLOSURE	7 CALENDAR DAYS PRIOR TO CLOSURE
	< 12 HOURS	4 BUSINESS DAYS PRIOR TO CLOSURE	2 BUSINESS DAYS PRIOR TO CLOSURE
LANE CLOSURES/ RESTRICTIONS	>= 2 WEEKS	14 CALENDAR DAYS PRIOR TO CLOSURE	
	< 2 WEEKS	5 BUSINESS DAYS PRIOR TO CLOSURE	
START OF CONSTRUCTION & TRAFFIC PATTERN CHANGES	N/A	14 CALENDAR DAYS PRIOR TO IMPLEMENTATION	

ANY UNFORESEEN CONDITIONS NOT SPECIFIED IN THE PLANS REQUIRING TRAFFIC RESTRICTIONS SHALL ALSO BE REPORTED TO THE PROJECT ENGINEER USING THE NOTIFICATION TIME FRAME TABLE.

SHORT DURATION RAMP CLOSURES

FOR THE PURPOSE OF PERFORMING THE REQUIRED WORK OR WHEN REQUIRED BY THE INTERSTATE ENTRANCE RAMP CLOSURE NOTE, RAMPS MAY BE CLOSED FOR SHORT DURATIONS AND DETOURED IN ACCORDANCE WITH THE RAMP CLOSURE TABLE IF APPROVED BY THE ENGINEER. RAMP CLOSURES ARE SUBJECT TO DISINCENTIVES.

FOR ALL SERVICE RAMP CLOSURES LASTING MORE THAN 12 HOURS BUT LESS THAN 60 HOURS AND/OR,
FOR ALL SYSTEM RAMP CLOSURES LASTING MORE THAN 12 HOURS BUT LESS THAN 24 HOURS

THE CONTRACTOR SHALL PROVIDE THE FOLLOWING:

- A MINIMUM OF TWO PORTABLE CHANGEABLE MESSAGE SIGNS (PCMS) PLACED, AS DIRECTED BY THE ENGINEER, TO WARN DRIVERS OF THE CLOSURE AND TO PROVIDE THE DESIGNATED DETOUR ROUTE.

- POSITIVE GUIDANCE ALONG THE DETOUR ROUTE WITH DETOUR SIGNS (M4-9 SERIES) IN ACCORDANCE WITH THE DETOUR SIGNS NOTE.

FOR ALL RAMP CLOSURES LASTING LESS THAN 12 HOURS, THE CONTRACTOR SHALL PROVIDE THE FOLLOWING:

- A MINIMUM OF TWO PORTABLE CHANGEABLE MESSAGE SIGNS (PCMS) PLACED, AS DIRECTED BY THE ENGINEER, TO WARN DRIVERS OF THE CLOSURE AND TO PROVIDE THE DESIGNATED DETOUR ROUTE.

WHEN CLOSING ENTRANCE RAMPS, CORRESPONDING LEAD-IN LANES AND TURN LANES SHALL ALSO BE CLOSED.

IF A DESIGNATED DETOUR ROUTE IS NOT PROVIDED IN THE PLANS, TRAFFIC SHALL BE DIRECTED TO THE NEXT INTERCHANGE, IF AVAILABLE, TO TURN AROUND. IF THE USE OF THE NEXT INTERCHANGE IS NOT POSSIBLE, AN ALTERNATIVE DETOUR ROUTE SHALL BE PROVIDED BY THE ENGINEER.

SERVICE RAMP: INTERCHANGE RAMPS BETWEEN FREEWAYS (OR EXPRESSWAYS) AND NON-FREEWAYS (OR NONEXPRESSWAYS). THESE RAMPS PROVIDE ACCESS (CONNECTIONS) BETWEEN FREEWAYS/EXPRESSWAYS AND OTHER PRINCIPAL/MINOR ARTERIALS, COLLECTORS OR LOCAL ROADS.

SYSTEM RAMP: INTERCHANGE RAMPS (OR CONNECTORS) BETWEEN FREEWAYS (OR EXPRESSWAYS) AND FREEWAYS (OR EXPRESSWAYS).

ms consultants, inc.

PLOT.CEL
ms consultants, inc.
msconsultants.com
www.rmsconsultants.com
Ohio DOT Workspace
70\71 East Interchange 2E
1"
0.5"
0
Batchplot Spec: \\rmsconsultants.com\files\production\03\60\06634_2E\standards\ohdot\v8i\batchplt.spc
Pen Table: \\rmsconsultants.com\files\Standards\ustn\ohdot\v8i\rms\plotting\pen\V8i_rms_std.tbl PCF: 60-06634_2E_Columbus
Plot Driver: \\rmsconsultants.com\files\Standards\ustn\ohdot\v8i\rms\plotting\PDF.pltcfg
34" x 22"
View: FENCE_VIEW1
By: hbrendinger
Model: Sheet @ 7:00:23 PM
Printed: 2/13/2019
File: \\rmsconsultants.com\files\Production\03\60\06634_2E\mot\sheets\105322MN0003.dgn

SHORT DURATION RAMP CLOSURE TABLE		
RAMP	HOURS RAMPS MAY NOT BE CLOSED	DESIGNATED DETOUR ROUTE
THIRD STREET TO I-70 EB	5AM-10PM DAILY	1 PCMS (*) WITH MESSAGE AND LOCATION TO BE DETERMINED BY ENGINEER
BROAD ST. TO I-71 SB	5AM-10PM DAILY	2 PCMS WITH MESSAGE AND LOCATION TO BE DETERMINED BY ENGINEER
CLEVELAND AVE. TO I-71 SB	5AM-10PM DAILY	2 PCMS WITH MESSAGE AND LOCATION TO BE DETERMINED BY ENGINEER

(*) ONLY 1 PCMS REQUIRED DUE TO SINGLE/ONE-WAY APPROACH TO RAMP CLOSURE.

ITEM 614 - MAINTAINING TRAFFIC (NOTICE OF CLOSURE SIGN)

NOTICE OF CLOSURE SIGNS, W20-H13, SHALL BE ERECTED BY THE CONTRACTOR PRIOR TO THE SCHEDULED ROAD OR RAMP CLOSURE IN ACCORDNACE WITH THE NOTICE OF CLOSURE TIME TABLE BELOW. [AT THE APPROVAL OF THE ENGINEER, PORTABLE CHANGEABLE MESSAGE SIGNS MAY BE USED IN LIEU OF THE STANDARD FLATSHEET SIGN FOR CLOSURE DURATIONS OF LESS THAN 1 WEEK.]

THE SIGNS SHALL BE ERECTED ON THE RIGHT-HAND SIDE OF THE ROAD/RAMP FACING TRAFFIC. THEY SHALL BE PLACED SO AS NOT TO INTERFERE WITH THE VISIBILITY OF ANY OTHER TRAFFIC CONTROL SIGNS. ON ROADWAYS, THEY SHOULD BE ERECTED AT OR NEAR THE POINT OF CLOSURE. THE SIGNS MAY BE ERECTED ANYWHERE ON RAMPS AS LONG AS THEY ARE VISIBLE TO THE MOTORISTS USING THE RAMP. ON ENTRANCE RAMPS, THE SIGN SHALL BE ERECTED WELL IN ADVANCE OF THE MERGE AREA TO AVOID DISTRACTING MOTORISTS.

Notice of Closure Sign Time Table			
Item	*Duration of Closure*	*Sign Display to Public*	*Notification due to District 6 Communications Office*
Ramp & Road Closures	*>= 2 weeks*	*14 calendar days prior to closure*	*21 calendar days prior to closure*
	> 12 hours & < 2 weeks	*7 calendar days prior to closure*	*14 calendar days prior to closure*
	< 12 hours	*2 business days prior to closure*	*4 business days prior to closure*

THE SIGN SHALL DISPLAY THE DATE OF THE CLOSURE IN MMM-DD FORMAT AND THE NUMBER OF DAYS OF THE CLOSURE. THE LAST LINE OF THE W20-H13 SIGN SHALL DISPLAY THE PHONE NUMBER OF THE DISTRICT 6 PUBLIC INFORMATION CONSTRUCTION LINE, (740)833-8268, WHICH A MOTORIST MAY CALL FOR ADDITIONAL INFORMATION.

PERMITTED LANE CLOSURES ON FREEWAYS, RAMPS AND CITY STREETS

THE EXISTING NUMBER OF LANES IN EACH DIRECTION ON ALL FREEWAYS SHALL BE MAINTAINED IN ACCORDANCE WITH THE UNAUTHORIZED LANE USE TABLE FOR EACH LOCATION UNLESS OTHERWISE SHOWN IN THE PLANS. THE EXISTING NUMBER OF LANES IN EACH DIRECTION ON ALL RAMPS AND CITY STREETS SHALL BE MAINTAINED FOR EACH LOCATION UNLESS OTHERWISE SHOWN IN THE PLANS.

IT MAY BE NECESSARY TO EXTEND THE ADVANCE WARNING, TAPER AND BUFFER ZONES BEYOND THE MINIMUM DISTANCES SHOWN ON THE STANDARD DRAWINGS DUE TO HORIZONTAL ALIGNMENT, VERTICAL ALIGNMENT, RAMP LOCATIONS, OR OTHER SIGHT OBSTRUCTIONS. TAPERS SHOULD BE PLACED IN TANGENT SECTIONS WHENEVER POSSIBLE.

LENGTH AND DURATION OF LANE CLOSURES AND RESTRICTIONS SHALL BE AT THE APPROVAL OF THE ENGINEER. IT IS THE INTENT TO MINIMIZE THE IMPACT TO THE TRAVELING PUBLIC. LANE CLOSURES OR RESTRICTIONS OVER SEGMENTS OF THE PROJECT IN WHICH NO WORK IS ANTICIPATED WITHIN A REASONABLE TIME FRAME, AS DETERMINED BY THE ENGINEER, SHALL NOT BE PERMITTED. THE LEVEL OF UTILIZATION OF MAINTENANCE OF TRAFFIC DEVICES SHALL BE COMMENSURATE WITH THE WORK IN PROGRESS.

ALL WORK ZONE AND TRAFFIC CONTROL DEVICES SHALL BE FURNISHED, ERECTED, MAINTAINED AND REMOVED BY THE CONTRACTOR IN ACCORDANCE WITH CMS 614 AND OTHER APPLICABLE PORTIONS OF THE SPECIFICATIONS, APPLICABLE STANDARD DRAWINGS, AND THE OHIO MANUAL OF UNIFORM TRAFFIC CONTROL DEVICES (CURRENT EDITION).

PAYMENT FOR ALL LABOR, EQUIPMENT AND MATERIALS SHALL BE INCLUDED IN THE LUMP SUM CONTRACT PRICE FOR 614, MAINTAINING TRAFFIC, UNLESS SEPARATELY ITEMIZED IN THE PLAN.

WRECKER AND EMERGENCY VEHICLE ACCESS

THE CONTRACTOR SHALL MAKE PROVISIONS TO ASSIST IN THE ACCESS OF WRECKERS AND EMERGENCY VEHICLES THROUGHOUT THE WORK ZONE. THIS MAY INCLUDE, BUT NOT LIMITED TO, PROVIDING FLAGGERS OR REMOVING SECTIONS OF BARRIER TO ALLOW EMERGENCY VEHICLES AND WRECKER TO MOVE THROUGH PORTIONS OF THE WORK ZONE TO REACH ACCIDENTS AND/OR BREAKDOWNS. THE INTENT IS TO MINIMIZE EXTENDED DELAYS TO THE TRAVELLING PUBLIC AND TO PROVIDE QUICKER RESPONSE TIMES FOR WRECKERS AND EMERGENCY VEHICLES. ALL AGENTS AND EMPLOYEES OF THE CONTRACTOR SHALL BE MADE AWARE OF THIS PROVISION BEFORE WORK BEGINS.

ALL ACTIVITIES ASSOCIATED WITH ACCOMMODATING WRECKER SERVICES AND EMERGENCY VEHICLE ACCESS THROUGHOUT THE WORK ZONE SHALL BE COORDINATED BY THE WORKSITE TRAFFIC SUPERVISOR AND THE ENGINEER.

PAYMENT FOR ALL LABOR, EQUIPMENT, AND MATERIALS SHALL BE INCLUDED IN THE LUMP SUM CONTRACT PRICE FOR ITEM 614, MAINTAINING TRAFFIC.

LANE VALUE CONTRACT TABLE

THE CONTRACTOR SHALL BE ASSESSED A DISINCENTIVE AS DESIGNATED IN THE LANE VALUE CONTRACT TABLE FOR EACH UNIT OF TIME A LANE/SHOULDER/RAMP IS CLOSED BY THE CONTRACTOR'S ACTION WHILE NOT OTHERWISE PERMITTED BY THE LANE VALUE CONTRACT TABLE.

LANE VALUE CONTRACT TABLE						
FRA-70						
Section (SLM)	Existing Number of Lanes per Direction	Lane closures are NOT permitted:				Disincentive Amounts per minute per lane
		Lane Reduction	Mon to Fri	Sat	Sun	
Scioto River (13.41) to Short Street (13.73)	4	4 to 3	5AM-8PM	No Restriction	No Restriction	$270
		4 to 2	5AM-9PM	7AM-9AM & 1PM-7PM	7AM-9AM & 1PM-7PM	$270
		4 to 1	5AM-11PM	6AM-10PM	6AM-10PM	$270
Short Street (13.73) to Grant Avenue (14.56)	3	3 to 2	5AM-9PM	6AM-10PM	6AM-10PM	$355
		3 to 1	5AM-11PM	5AM-10PM	5AM-10PM	$355
Grant Avenue (14.56) to Champion Street (15.60) (WB)	2	2 to 1	5AM-11PM	6AM-10PM	6AM-10PM	$530
Grant Avenue (14.56) to 18th Street (15.24) (EB)	2	2 to 1	5AM-11PM	6AM-10PM	6AM-10PM	$530
18th Street (15.24) to Alum Creek Drive (17.00) (EB)	4	4 to 3	5AM-9AM & 2PM-7PM	No Restriction	No Restriction	$265
		4 to 2	8AM-8PM	11AM-7PM	11AM-7PM	$265
		4 to 1	5AM-Midnight	7AM-Midnight	7AM-Midnight	$265
Champion Street (15.60) to Alum Creek Drive (17.00) (WB)	4	4 to 3	5AM-9PM	No Restriction	No Restriction	$265
		4 to 2	5AM-8PM	9AM-7PM	9AM-7PM	$265
		4 to 1	5AM-11PM	6AM-11PM	6AM-11PM	$265
Alum Creek Drive (17.00) to College Avenue (18.67) (EB)	4	4 to 3	5AM-9AM & 2PM-7PM	No Restriction	No Restriction	$245
		4 to 2	8AM-8PM	11AM-7PM	11AM-7PM	$245
		4 to 1	5AM-Midnight	7AM-Midnight	7AM-Midnight	$245
Alum Creek Drive (17.00) to College Avenue (18.67) (WB)	3	3 to 2	5AM-8PM	9AM-7PM	9AM-7PM	$330
		3 to 1	5AM-11PM	6AM-11PM	6AM-11PM	$330
Short term shoulder closures are NOT permitted 5AM-9AM and 3PM-6PM Monday-Friday.						
FRA-71						
Section (SLM)	Existing Number of Lanes per Direction	Lane closures are NOT permitted:				Disincentive Amounts per minute per lane
		Lane Reduction	Mon to Fri	Sat	Sun	
Frank Road (12.79) to I-70 (15.26)	4	4 to 3	5AM-9AM & 3PM-6PM	No Restriction	No Restriction	$325
		4 to 2	5AM-7PM	7AM-9AM & 2PM-7PM	7AM-9AM & 2PM-7PM	$325
		4 to 1	5AM-11PM	6AM-11PM	6AM-10PM	$325
I-70-West Split (15.26) to I-70-East Split (16.83)	See corresponding section on I-70 (SLM 13.43 to 14.78)					
I-70-East Split (16.83) to Main Street (17.13)	2	2 to 1	5AM-10PM	6AM-10PM	6AM-10PM	$445

CALCULATED JAH CHECKED JML

MAINTENANCE OF TRAFFIC - GENERAL NOTES

FRA-70-14.54

ms consultants, inc.

PLOT.CEL
ms consultants, inc.
msconsultants.com
www.msconsultants.com
Ohio DOT Workspace
70\71 East Interchange 2E
1"
0.5"
0
Batchplot Spec: \\msconsultants.com\files\production\03\60\06634_2E\standards\plotdir\batchplt.spc PCF: ohdot1V8i
Pen Table: \\msconsultants.com\files\Standards\ustn\ohdot\V8i\ms\plotting\pen\V8i_ms_std.tbl PCF: 60-06634_2E_Columbus
Plot Driver: \\msconsultants.com\files\Standards\ustn\ohdot\v8i\ms\plotting\PDF.pltcfg
34" x 22"
Model: Sheet View: FENCE_VIEW1
Printed: 9/28/2018 @ 10:05:17 AM By: kryan
File: N:\03\60\06634_2E\mot\sheets\105322MN0004.dgn
ms consultants, inc.

FLOODLIGHTING

FLOODLIGHTING OF THE WORK SITE FOR OPERATIONS CONDUCTED DURING NIGHTTIME PERIODS SHALL BE ACCOMPLISHED SO THAT THE LIGHTS DO NOT CAUSE GLARE TO THE DRIVERS ON THE ROADWAY. TO ENSURE THE ADEQUACY OF THE FLOODLIGHT PLACEMENT, THE CONTRACTOR AND THE ENGINEER SHALL DRIVE THROUGH THE WORK SITE EACH NIGHT WHEN THE LIGHTING IS IN PLACE AND OPERATIVE PRIOR TO COMMENCING ANY WORK. IF GLARE IS DETECTED, THE LIGHT PLACEMENT AND SHIELDING SHALL BE ADJUSTED TO THE SATISFACTION OF THE ENGINEER BEFORE WORK PROCEEDS.

PAYMENT FOR ALL LABOR, EQUIPMENT AND MATERIALS SHALL BE INCLUDED IN THE LUMP SUM CONTRACT PRICE FOR ITEM 614, MAINTAINING TRAFFIC.

TRUCK MOUNTED ATTENUATOR (TMA)

WHEN WORKING IN A CLOSED LANE OR SHOULDER ON A MULTILANE HIGHWAY WITHOUT POSITIVE PROTECTION, A TRUCK MOUNTED ATTENUATOR (TMA) SHALL BE PROVIDED TO PROTECT THE WORK AREA IN ACCORDANCE WITH STANDARD DRAWINGS MT-95.30, MT-95.31, MT-95.32 OR OMUTCD TYPICAL APPLICATION (TA) 4 AND TA-6. THE TMA SHALL BE PLACED IN SUCH A WAY TO ADEQUATELY PROTECT THE WORKERS INSIDE THE WORK ZONE. THE TMA IS NOT INTENDED TO BE USED AS OR SUBSTITUTED FOR THE FLASHING ARROW PANEL AT THE BEGINNING OF THE MERGE TAPER. THE TMA SHALL MEET NCHRP 350 TEST LEVEL 3 CRITERIA FOR STANDARD AND OPTIONAL TESTS AT 100 KM/H (62 MPH) FOR DESIGN IMPACTS. THE COST FOR PROVIDING THE TMA SHALL INCLUDE ALL MATERIAL, LABOR, EQUIPMENT, AND HARDWARE REPLACEMENT AND IS TO BE INCLUDED IN THE LUMP SUM CONTRACT PRICE FOR ITEM 614 MAINTAINING TRAFFIC.

MINIMUM VERTICAL CLEARANCES DURING CONSTRUCTION

THE CONTRACTOR SHALL ENSURE, PROVIDE, AND MAINTAIN A MINIMUM OF 15' VERTICAL CLEARANCE AT ALL TIMES OVER ANY EXISTING, TEMPORARY OR PROPOSED ROADWAYS USED TO MAINTAIN TRAFFIC AND UNDER ANY EXISTING OR PROPOSED OVERPASS STRUCTURES OR OTHER OBSTACLES.

MAINLINE DRAINAGE CONSTRUCTION

THE CONTRACTOR IS RESPONSIBLE FOR MAINTAINING POSITIVE DRAINAGE THROUGHOUT CONSTRUCTION BY UTILIZING EXISTING, PERMANENT AND TEMPORARY DRAINAGE STRUCTURES AND CONDUIT. TEMPORARY DRAINAGE CONNECTIONS ARE SHOWN IN THE PLANS FOR USE BY THE CONTRACTOR DURING CONSTRUCTION BASED UPON THE MAINTENANCE OF TRAFFIC PLANS. ANY LANE CLOSURES REQUIRED FOR DRAINAGE CONSTRUCTION, IN ADDITION TO THOSE PROVIDED IN THE PLANS, SHALL BE IMPLEMENTED AS PER THE CURRENT EDITION OF THE OMUTCD AND THE CURRENT STANDARD CONSTRUCTION DRAWINGS AND SHALL BE RESTRICTED TO THE TIME FRAMES SPECIFIED IN THE 'UNAUTHORIZED LANE USE TABLE' OR UPON WRITTEN APPROVAL BY THE ENGINEER.

PAVEMENT MARKING REMOVAL

THIS ITEM OF WORK SHALL CONSIST OF THE REMOVAL OF PAVEMENT MARKINGS WHERE INDICATED IN THE PLAN, AND IN THE MANNER DESCRIBED IN THE SPECIFICATIONS. PAYMENT FOR REMOVAL OF PAVEMENT MARKINGS INCLUDING ALL LABOR, MATERIAL, EQUIPMENT, AND INCIDENTALS NECESSARY TO REMOVE THE PAVEMENT MARKING AND PROPERLY DISPOSE OF ANY EXCESS MATERIAL SHALL BE INCLUDED IN ITEM 614. UPON COMPLETION OF ALL MAINTENANCE OPERATIONS, ALL REMAINING PAVEMENT MARKINGS APPLIED WITHIN ANY MAINTENANCE PART SHALL BE REMOVED. PAYMENT SHALL BE INCLUDED WITHIN ITEM 614, MAINTAINING TRAFFIC.

ITEM 304, BACKFILL OR STEEL PLATES

THIS NOTE IS APPLICABLE TO CITY STREETS ONLY.

DURING ALL PARTS OF CONSTRUCTION, TRAFFIC SHALL BE MAINTAINED WHEN L.E.O.'S OR FLAGGERS ARE NOT PRESENT WITH A MINIMUM OF ONE 10 FOOT LANE (NUMBER OF LANES AS SPECIFIED ON THE PLAN SHEETS) USING THE EXISTING, TEMPORARY OR FINAL PAVEMENT. THE CONTRACTOR SHALL COORDINATE WITH THE RELOCATION OF THE EXISTING UTILITIES IN CONFLICT WITHIN THE LOCATION OF THE PROPOSED ROADWAY WIDENING CONSTRUCTION AND INSTALL PROPOSED UTILITIES WHERE APPLICABLE. ALL TRENCHES SHALL BE SECURELY PLATED AND PINNED TO THE PAVEMENT PRIOR TO SHIFTING TRAFFIC ONTO STEEL PLATES.

THE CONTRACTOR SHALL ENSURE THAT ALL DRUMS ARE PLACED ON STABILIZED MATERIAL. USE OF CMS ITEM 304 TO CONSTRUCT TEMPORARY SHOULDERS SHALL BE THE CONTRACTOR'S RESPONSIBILITY AT THE CONTRACTOR'S EXPENSE. STABILIZED AGGREGATE SHOULDER MATERIAL SHALL BE INSTALLED IN ACCORDANCE WITH CMS ITEM 304 AND MAY BE REUSED AS THE PAVEMENT AGGREGATE BASE.

PER CITY ORDINANCE, STEEL PLATES ARE NOT PERMITTED DURING WINTER MONTHS. THE CONTRACTOR SHALL BACKFILL ALL TRENCHES IN WINTER MONTHS (DEC. 1 THROUGH MARCH 31).

TEMPORARY FENCE

SNOW FENCE SHALL BE UTILIZED AS TEMPORARY FENCING ALONG MOUND STREET AS INDICATED. SNOW FENCE SHALL BE PLACED BY THE CONTRACTOR WHEN DIRECTED BY THE ENGINEER-IN-CHARGE. IT SHALL BE THE CONTRACTOR'S RESPONSIBILITY TO MAINTAIN AND REPAIR THE SNOW FENCE. COST FOR INSTALLATION, MAINTENANCE AND REPAIR OF THE SNOW FENCING SHALL BE INCLUDED IN ITEM 614 MAINTAINING TRAFFIC.

DRUM REQUIREMENTS

IN ADDITION TO THE REQUIREMENTS OF THE PLANS, SPECIFICATION AND PROPOSAL, DRUMS FURNISHED BY THE CONTRACTOR SHALL BE NEW AND UNUSED AT THE TIME OF ARRIVAL ON THE PROJECT. ANY DRUMS BROUGHT ON THE PROJECT, WHICH HAVE PREVIOUSLY BEEN USED ELSEWHERE, WILL NOT BE ACCEPTED.

PAYMENT FOR DRUMS SHALL BE INCLUDED IN THE LUMP SUM CONTRACT PRICE FOR ITEM 614 MAINTAINING TRAFFIC UNLESS SEPARATELY ITEMIZED.

DRIVEWAYS/PROPERTY ACCESS

VEHICULAR AND PEDESTRIAN ACCESS TO ALL PROPERTY PARCELS, INCLUDING OTHER COMMERCIAL CONSTRUCTION ENTRANCES ABUTTING THE PROJECT SHALL BE MAINTAINED AT ALL TIMES. IF A PARCEL HAS MORE THAN ONE DRIVEWAY, AT LEAST ONE DRIVEWAY MUST BE MAINTAINED AT ALL TIMES DURING CONSTRUCTION. WHERE A PARCEL IS SERVED BY ONLY ONE DRIVEWAY, THE AFFECTED DRIVEWAY MUST BE CONSTRUCTED IN STAGES AND/OR SUPPLEMENTED WITH ITEM 410 IF AUTHORIZED BY THE ENGINEER, SO THAT ACCESS IS NOT DISRUPTED. ITEM 410, TRAFFIC COMPACTED SURFACE, TYPE B SHALL BE ITEMIZED SEPARATELY FOR AUTHORIZATION ONLY BY THE ENGINEER. AN ESTIMATED QUANTITY OF 75 CUBIC YARDS HAS BEEN CARRIED TO THE GENERAL SUMMARY.

SHORT-TERM CLOSURE OF DRIVEWAYS WILL BE PERMITTED IN ACCORDANCE WITH THE SPECIFICATION REQUIREMENTS FOR THE PROTECTIONS OF COMPLETED ASPHALT COURSES. IT SHALL BE THE RESPONSIBILITY OF THE CONTRACTOR TO COORDINATE CONSTRUCTION ACTIVITIES WITH THE ENGINEER AND WITH THE OWNERS AND TENANTS OF ABUTTING PROPERTIES IN ADVANCE OF ANY OPERATIONS WHICH AFFECT ACCESS.

THE CONTRACTOR SHALL NOT AT ANY TIME DURING CONSTRUCTION CLOSE A DRIVEWAY TO THE NATIONWIDE CHILDRENS HOSPITAL PROPERTY, UNLESS OTHERWISE STATED IN THE PLANS.

PRIOR TO ANY DRIVEWAY CLOSURES FOR EXCAVATION, THE CONTRACTOR SHALL COORDINATE WITH THE PRIVATE PROPERTY OWNERS AND TENANTS. THE CONTRACTOR SHALL SUBMIT IN WRITING A SCHEDULE TO THE PROPERTY OWNERS AND TENANTS AFFECTED BY THE WORK. A COPY OF THE LETTER SHALL BE PROVIDED TO THE PROJECT ENGINEER.

UPON CLOSING OR PARTIALLY CLOSING A DRIVEWAY UNDER CONSTRUCTION, THE CONTRACTOR SHALL HAVE FIFTEEN (15) DAYS TO COMPLETE THE DRIVEWAY WORK AND REOPEN THE DRIVE IN ITS ENTIRETY. DURING THIS TIME, THE CONTRACTOR SHALL MAINTAIN A SECONDARY ACCESS OR CONSTRUCT THE DRIVE IN PORTIONS IN COMPLIANCE WITH THE PROPERTY OWNERS NEEDS FOR DRIVEWAY ACCESSIBILITY.

THE CONTRACTOR SHALL SUBMIT A LETTER NOTIFYING THE BUSINESSES, OWNERS AND TENANTS AFFECTED BY DRIVEWAY REPLACEMENT ONE WEEK PRIOR TO DRIVEWAY REPLACEMENT. ADDITIONALLY, THE CONTRACTOR SHALL PROVIDE WRITTEN NOTICE TO THE PROPERTY OWNER 90 DAYS PRIOR TO CONSTRUCTION WORK AT THE DRIVEWAY FOR 341-345 S. THIRD STREET.

CONTRACTOR COORDINATION WITH COTA

WHEN A COTA BUS STOP FALLS WITHIN A CONSTRUCTION ZONE, THAT BUS STOP SHALL BE TEMPORARILY CLOSED. THE CONTRACTOR SHALL CONTACT AND NOTIFY EMANUEL TILIAKOS WITH COTA (614-308-4231) OF THE BUS STOP CLOSURE THREE (3) WEEKS PRIOR TO THAT CLOSURE OCCURRING. A SIGN TO BE PROVIDED AND INSTALLED BY COTA SHALL BE PLACED AT THE BUS STOP THAT IS TO BE CLOSED TWO (2) WEEKS PRIOR TO THE CLOSURE INDICATING THAT THE BUS STOP WILL BE TEMPORARILY CLOSED. PRIOR TO ANY CLOSURE, PEDESTRIAN DETOUR SIGNS SHALL BE POSTED DIRECTING PEDESTRIANS TO THE NEAREST BUS STOP. THE PEDESTRIAN DETOUR ROUTE AND DETOUR SIGNAGE IS SUBJECT TO APPROVAL OF THE ENGINEER-IN-CHARGE AND SHALL BE IN FULL ACCORDANCE WITH FIGURES TA-28 AND TA-29 OF PART VI OF THE FEDERAL MANUAL OF UNIFORM TRAFFIC CONTROL DEVICES AND ODOT STANDARD DRAWINGS MT-110.10 ALONG WITH ANY OTHER STANDARD DRAWING REFERENCES ON THE TITLE SHEET. ANY CONFLICTING ROADWAY DETOUR SIGNS SHALL BE COVERED FOR THE DURATION OF THE CLOSURE. ALL WORK DESCRIBED HERE WITHIN SHALL BE INCLUDED WITHIN ITEM 614 - MAINTAINING TRAFFIC.

PEDESTRIAN TRAFFIC

THE SAFETY OF PEDESTRIAN TRAFFIC SHALL BE CONSIDERED AT ALL TIMES IN THE PROVISION OF TRAFFIC CONTROL DEVICES REQUIRED BY THESE PLANS AND NOTES. IT SHALL BE THE CONTRACTOR'S RESPONSIBILITY TO PROVIDE LIGHTS, SIGNS, BARRICADES, AND OTHER DEVICES TO WARN OF AND PHYSICALLY SEPARATE THE PEDESTRIAN FROM HAZARDS INCIDENTAL TO THE CONSTRUCTION AND DEMOLITION OPERATIONS. THE CONTRACTOR SHALL BE RESPONSIBLE FOR THE PROTECTION AND SAFE MOVEMENT OF PEDESTRIANS THROUGH, AROUND, OR DETOURED AWAY FROM THE CONSTRUCTION SITE. TRAFFIC CONTROL FOR PEDESTRIAN MOVEMENT SHALL BE AS PER FIGURES TA-28 AND TA-29 OF PART VI OF THE FEDERAL MANUAL OF UNIFORM TRAFFIC CONTROL DEVICES AND THE ODOT STANDARD DRAWING REFERENCES ON THE TITLE SHEET. ALL SIDEWALK DIVERSIONS SHALL BE PRE-APPROVED BY THE PROJECT ENGINEER.

THE CONTRACTOR SHALL MAINTAIN CROSSWALKS IN ACCORDANCE WITH ODOT STANDARD DRAWING MT-110.10. A SIDEWALK CLOSURE SCHEDULE SHALL BE GIVEN TO COTA'S REPRESENTATIVE ANDREW VOLENIK (614-308-7373) AND THE CITY.

PEDESTRIAN PATHWAY PROVISION AND MAINTENANCE

1. ADVANCED NOTIFICATION OF SIDEWALK CLOSURES, AND PEDESTRIAN GUIDANCE, SHALL BE PROVIDED AS PART OF ITEM 614. THIS SHALL INCLUDE SIGNAGE AND WRITTEN NOTICE TO THE ENGINEER, AND THE SURROUNDING COMMUNITY AS SPECIFIED. SIDEWALK CLOSED SIGNS, AND DETOUR SIGNS, SHALL BE ON BARRICADES WHICH COMPLETELY OBSTRUCT THE EXISTING WALKWAY. EQUIVALENT INFORMATION SHALL BE PROVIDED IN ALTERNATE FORMATS FOR PEDESTRIANS WHO HAVE VISUAL DISABILITIES. SEE TA-28 AND TA-29 OF PART IV OF THE FEDERAL MUTCD FOR TYPICAL TEMPORARY TRAFFIC CONTROL DEVICE USAGE AND TECHNIQUES FOR PEDESTRIAN MOVEMENT.

2. 36 INCH HIGH LONGITUDINAL WALKWAY CHANNELIZING DEVICES, OR BARRIERS WITH CONTINUOUS EDGING AT THE BOTTOM WITHIN 6 INCHES OF THE GROUND OR UN-SPACED DRUMS OR TALL CONES, SHALL BE PROVIDED TO ACHIEVE ACCESSIBILITY FOR A WALKING CANE-USER. CONES, TAPE AND OTHER DISCONTINUOUS BARRIERS SHALL NOT BE APPLIED IN AREAS USED BY PEDESTRIANS. THERE SHALL NOT BE ANY ABRUPT CHANGES IN GRADE OR TERRAIN THAT COULD CAUSE A TRIPPING HAZARD OR COULD BE A BARRIER TO WHEELCHAIR USE. WALKWAYS SHALL BE 60 INCHES WIDE, WITH NO PROTRUSIONS OF MORE THAN 4 INCHES FROM THE CHANNELIZING DEVICES. (REF. AS ABOVE)

3. IF A SIGNIFICANT POTENTIAL EXISTS FOR VEHICLE INCURSIONS TO THE PEDESTRIAN PATH, PEDESTRIANS SHALL BE REROUTED OR TEMPORARY TRAFFIC BARRIERS SHALL BE INSTALLED. IF A TEMPORARY TRAFFIC BARRIER IS USED TO SHIELD PEDESTRIANS, IT SHALL BE DESIGNED TO ACCOMMODATE SITE CONDITIONS, PROVIDE AN ACCESSIBLE PASSAGE, AND BE DETECTABLE BY PEOPLE WITH DISABILITIES. (REF. AS ABOVE)

4. PEDESTRIAN ACCESS TO RESIDENCES AND BUSINESSES SHALL BE MAINTAINED AT ALL TIMES. MAINTAIN ACCESS TO BLOCKS FROM ONE END OR THE OTHER. FINISH WORK AT ONE END OF A BLOCK BEFORE DISTURBING THE OTHER END, OR INSTALL TEMPORARY SIDEWALK.

PAYMENT FOR MAINTAINING PEDESTRIAN ACCESS SHALL BE INCLUDED AS LUMP SUM IN ITEM 614 MAINTAINING TRAFFIC.

CALCULATED JAH CHECKED JML

MAINTENANCE OF TRAFFIC - GENERAL NOTES

FRA-70-14.54

PLOT.CEL
ms consultants, inc.
msconsultants.com
www.msconsultants.com
Ohio DOT Workspace
70\71 East Interchange 2E
1"
0.5"
0
Batchplot Spec: \\msconsultants.com\files\production\03\60\06634.2E\standards\plotdrv\batchplt.spc PCF: ohdot1V8i
Pen Table: \\msconsultants.com\files\Standards\astm\ohdot\V8i\ms\plotting\pen\V8i_ms_std.tbl PCF: 60-06634_2E_Columbus
Plot Driver: \\msconsultants.com\files\Standards\astm\ohdot\v8i\ms\plotting\PDF.pltcfg
Model: Sheet View: FENCE_VIEW1
Printed: 9/28/2018 @ 10:05:19 AM By: kryan
File: N:\03\60\06634.2E\mot\sheets\105228MN0005.dgn
34" x 22"

USE OF WEIGHTED CHANNELIZERS

THE WEIGHTED CHANNELIZER MAY BE USED IN ACCORDANCE WITH THIS SECTION. THE WEIGHTED CHANNELIZER SHALL BE PREDOMINANTLY ORANGE IN COLOR AND SHALL BE MADE OF LIGHTWEIGHT, FLEXIBLE, AND DEFORMBABLE MATERIAL. THEY SHALL BE AT LEAST 42 INCHES IN HEIGHT WITH A WEIGHTED BASE. THEY MAY HAVE A HANDLE OR LIFTING DEVICE WHICH EXTENDS ABOVE THE 42 INCHES MINIMUM HEIGHT.

THE MARKINGS ON THE WEIGHTED CHANNELIZER SHALL BE HORIZONTAL, CIRCUMFERENTIAL, ALTERNATING ORANGE AND WHITE RETROREFLECTIVE STRIPES 6 INCHES WIDE. EACH WEIGHTED CHANNELIZER SHALL HAVE A MINIMUM OF TWO ORANGE AND TWO WHITE STRIPES. ANY NON-RETROREFLECTIVE SPACES BETWEEN THE HORIZONTAL ORANGE AND WHITE STRIPES SHALL NOT EXCEED 2 INCHES WIDE. THE WEIGHTED CHANNELIZER SHALL HAVE A 4-INCH MINIMUM WIDTH, REGARDLESS OF ORIENTATION.

USE OF WEIGHTED CHANNELIZERS ON FREEWAYS AND MULTILANE HIGHWAYS SHALL BE LIMITED TO SHORT-TERM OPERATIONS FOR EITHER DAY OR NIGHT. UPON COMPLETION OF WORK, THE WEIGHTED CHANNELIZERS SHALL BE REMOVED. THE WEIGHTED CHANNELIZERS MAY AGAIN BE PLACED ON THE HIGHWAY WHEN THE WORK IS TO RESUME ON THE FOLLOWING DAY OR NIGHT. ANY LANE CLOSURE USING CHANNELIZATION DEVICES, EXPECTED TO REMAIN FOR MORE THAN TWELVE HOURS, SHALL REQUIRE THE USE OF DRUMS OR BARRICADES.

WHEN USED AT NIGHT, WEIGHTED CHANNELIZERS SHALL ONLY BE PLACED IN THE TANGENT AREA AND AT A MAXIMUM SPACING OF 40 FEET. THE TANGENT AREA IS DEFINED AS THE AREA AFTER THE TRANSITION TAPER WHERE THE WORK TAKES PLACE. DRUMS SHALL BE USED IN THE TRANSITION TAPERS FOR NIGHT OPERATIONS.

STEPS SHOULD BE TAKEN TO ENSURE THAT THE WEIGHTED CHANNLEIZERS WILL NOT BE BLOWN OVER OR DISPLACED BY WIND OR MOVING TRAFFIC. BALLASTS SHOULD NOT PRESENT A HAZARD IF THE WEIGHTED CHANNELIZERS ARE IN ADVERTENTLY STRUCK, NOR SHOULD THEY AFFECT THE VISIBILITY OF THE WEIGHTED CHANNELIZERS. ALL BALLASTS USED SHOULD BE IN ACCORDANCE WITH THE MANUFACTURER'S SPECIFICATIONS.

PAYMENT SHALL BE INCLUDED IN THE LUMP SUM CONTRACT PRICE FOR ITEM 614 MAINTAINING TRAFFIC.

PRE-MAINTENANCE OF TRAFFIC MEETING

A PRE-MAINTENANCE OF TRAFFIC MEETING SHALL BE HELD (MINIMUM 10 WORK DAYS) PRIOR TO WORK BEGINNING OR ANY CHANGE OF PHASING. THIS MEETING SHALL INCLUDE THE DISTRICT WORK ZONE TRAFFIC MANAGER (D06.MOT@DOT.OHIO.GOV) AS WELL AS THE CONTRACTOR AND ANY OF HIS SUB-CONTRACTORS INVOLVED WITH TEMPORARY TRAFFIC CONTROL. FOR COLUMBUS SECTIONS OF ROADWAY, ALSO INCLUDE THE TEMPORARY CONTROL COORDINATOR (614-645-6269 OR 614-645-5845) FROM THE CITY OF COLUMBUS DIVISION OF ASSET MANAGEMENT.

INGRESS/EGRESS

WORKSITE INGRESS AND EGRESS MEETING THE DESCRIPTIONS BELOW SHALL NOT OCCUR DURING PEAK HOURS. PEAK HOURS ARE CONSIDERED TO BE 5AM-9AM AND 3PM-6PM MONDAY-FRIDAY.
-ENTERING THE WORKSITE FROM RAMPS, INTERSTATE SHOULDERS OR INTERSTATE LANES
-EXITING THE WORKSITE ONTO OR ALONGSIDE RAMPS, INTERSTATE SHOULDERS OR INTERSTATE LANES

MAINTENANCE OF TRAFFIC SIGNAL INSTALLATIONS

THE FOLLOWING NOTES ARE APPLICABLE TO CITY OF COLUMBUS TRAFFIC SIGNALS:

A) PROPOSED TRAFFIC SIGNAL INSTALLATION

THE CONTRACTOR SHALL BE RESPONSIBLE FOR MAINTAINING ALL PROPOSED TRAFFIC SIGNAL DEVICES UNDER THE FOLLOWING CONDITIONS FROM THE TIME OF INSTALLATION UNTIL THE DEVICE HAS BEEN ACCEPTED BY THE TRANSPORTATION DIVISION.

THE CONTRACTOR SHALL PROVIDE ONE OR TWO CONTACT PERSONS WHO CAN RECEIVE ALL DEVICE OUT-OF-SERVICE CALLS THAT FALL UNDER THE CONTRACTOR'S RESPONSIBILITY. THE CONTRACTOR SHALL DISPATCH MAINTENANCE PERSONNEL TO CORRECT THE PROBLEM. THE CONTRACTOR SHALL PROVIDE THIS DIVISION AND THE PROJECT ENGINEER WITH ADDRESSES AND PHONE NUMBERS OF THESE CONTACT PERSONS. MAINTENANCE PERSONNEL MAY BE USED TO PERFORM OTHER DUTIES AS LONG AS PROMPT ATTENTION IS GIVEN TO THESE CALLS AND A PERSON IS CONTINUOUSLY AVAILABLE TWENTY-FOUR (24) HOURS A DAY AND SEVEN (7) DAYS A WEEK. THE CONTRACTOR SHALL PROVIDE MAINTENANCE SERVICE ENTIRELY WITH HIS PERSONNEL.

THE CONTRACTOR SHALL CORRECT ALL BULB OUTAGES, DEVICE MALFUNCTIONS OF ANY TYPE, INTERNAL CABINET POWER LOSES, SPAN OR CABLE PROBLEMS AND MISALIGNED OR DAMAGED VEHICULAR OR PEDESTRIAN SIGNAL HEADS WITHIN TWO (2) HOURS AFTER THE CONTRACTOR'S CONTACT PERSON HAS BEEN NOTIFIED OF ANY ONE OF THE ABOVE. IN THE EVENT A NEW SIGNAL DEVICE IS DAMAGED PRIOR TO ACCEPTANCE, THE DAMAGED DEVICE EXCEPT POLES SHALL BE REPLACED OR REPAIRED BY THE CONTRACTOR TO THE SATISFACTION OF THIS DIVISION. ANY DAMAGED CABINET ASSEMBLY DEVICE IF REPAIRED SHALL BE TESTED ONCE AGAIN BY THIS DIVISION BEFORE THE DEVICE CAN BE INSTALLED.

IN THE EVENT OF A LOSS OF POWER TO THE SIGNAL INDICATIONS OTHER THAN AN ELECTRIC COMPANY GENERAL POWER OUTAGE, THE CONTRACTOR AT HIS EXPENSE SHALL IMMEDIATELY TAKE ACTION [WITHIN 30 MINUTES] TO PROPERLY ERECT TEMPORARY STOP SIGN(S) AND PROVIDE POLICE OFFICER(S) TO DIRECT TRAFFIC UNTIL THE SIGNAL IS BACK ON "FLASH" OR OPERATING PROPERLY.

IF A TRAFFIC STRAIN, SUPPORT OR PEDESTAL POLE IS DAMAGED AND THAT DAMAGE CAUSED POLE INSTABILITY, THEN THE CONTRACTOR SHALL TAKE IMMEDIATE ACTION (WITHIN 2 HOURS) TO STABILIZE IT. THE CONTRACTOR SHALL STILL BE RESPONSIBLE FOR PROVIDING THE PROJECT WITH A NEW UNDAMAGED POLE.

WHERE OUT-OF-SERVICE CALLS ARE THE DIRECT RESULT OF A VEHICULAR ACCIDENT THE RESPONSE OF THE CONTRACTOR SHALL BE AS OUTLINED ABOVE. THE CONTRACTOR SHALL BE RESPONSIBLE FOR THE COLLECTION OF ANY COMPENSATION FROM THOSE PARTIES RESPONSIBLE FOR THE DAMAGE TO THE CONTRACTOR'S MATERIALS.

MAINTENANCE OF TRAFFIC SIGNAL INSTALLATIONS, CONT'D

WHERE THE CONTRACTOR HAS FAILED TO RESPOND OR CANNOT RESPOND TO AN OUT-OF-SERVICE CALL WITHIN THE TIME PERIOD SPECIFIED ABOVE AT LOCATIONS UNDER HIS RESPONSIBILITY, THIS DIVISION MAY TAKE ACTION AS IT DEEMS NECESSARY TO CORRECT THE SITUATION. THIS ACTION MAY INCLUDE CONTROLLING THE INTERSECTION USING COLUMBUS POLICE OFFICERS, COMPLETELY REMOVING OR REPLACING ANY MALFUNCTIONING TRAFFIC CONTROL DEVICE, AND/OR INSTALLING ANY DEVICE(S) REQUIRED TO RETURN THE INTERSECTION TO REGULAR SIGNAL OPERATION. ALL COSTS ASSOCIATED WITH THESE ACTIONS SHALL BE BILLED DIRECTLY TO THE CONTRACTOR AND NOT INCLUDED IN ITEM 614 MAINTAINING TRAFFIC.

ANY NON-OPERATING VEHICULAR OR PEDESTRIAN SIGNAL HEAD OR PUSHBUTTON SHALL BE COVERED AS REFERENCED TO IN THESE PLANS. ALL SIGNAL HEADS WHILE COVERED SHALL BE DARK BY DISCONNECTING POWER TO THE SIGNAL INDICATIONS. NO COVERED HEAD SHALL BLOCK THE VIEW OF AN OPERATING HEAD. A MINIMUM OF TWO (2) VEHICULAR SIGNAL HEADS PER TRAVELLED DIRECTION (SPACED 8' APART MINIMUM AND 12' MAXIMUM) SHALL BE OPERATING AT ALL TIMES. NO EXCEPTIONS!

B) TEMPORARY CONTROLLER OR TRAFFIC SIGNALS

IN ADDITION TO ITEM 614.10, THE FOLLOWING SHALL APPLY.

IF THE CONTRACTOR IS REQUIRED TO ERECT AND/OR INSTALL ANY TEMPORARY TRAFFIC CONTROL DEVICE OR TEMPORARY SIGNAL/SUPPORT POLE THAT IS NOT SPECIFIED IN THESE PLANS, THEN THE CONTRACTOR SHALL SUBMIT THE DESIGN CHANGE TO THE CITY OF COLUMBUS, TRANSPORTATION DIVISION, FOR APPROVAL PRIOR TO THEIR INSTALLATION. THIS DIVISION ALSO RESERVES THE RIGHT TO MAKE OR HAVE THE CONTRACTOR MAKE CHANGES TO THE TRAFFIC SIGNAL OPERATION.

IF THE CONTRACTOR NEEDS TO INSTALL A TEMPORARY CONTROLLER AND/OR A TS1 CABINET ASSEMBLY AT ANY INTERSECTION, THEN THE EQUIPMENT SHALL MEET NEMA STANDARDS TS1-1989 OR TS2-1998 (TYPE 2) AND SHALL BE APPROVED BY THE CITY OF COLUMBUS, TRANSPORTATION DIVISION.

C) EXISTING TRAFFIC SIGNAL DEVICES

THE CITY OF COLUMBUS, TRANSPORTATION DIVISION (ELECTRONICS MAINTENANCE SHOP 614-645-7933), SHALL PERFORM ROUTINE MAINTENANCE ON ALL EXISTING CABINET ASSEMBLY ITEMS ONLY. THE GENERAL CONTRACTOR SHALL BE RESPONSIBLE FOR THE MAINTENANCE OF ALL OTHER EXISTING TRAFFIC SIGNAL DEVICES ONCE ANY PROJECT SIGNAL WORK HAS STARTED. IF, IN THE COURSE OF WORK, THE GENERAL CONTRACTOR OR ANY PROJECT SUB-CONTRACTOR CAUSED DAMAGE TO ANY EXISTING TRAFFIC SIGNAL DEVICE OTHER THAN THE CABINET ASSEMBLY, THEN THE CONTRACTOR AT THE CONTRACTOR'S COST SHALL REPAIR AND/OR REPLACE THE DAMAGED DEVICE TO THE SATISFACTION OF THIS DIVISION. DAMAGE TO THE CABINET ASSEMBLY BY ANY PROJECT CONTRACTOR SHALL BE REPAIRED BY THIS DIVISION AND BILLED TO THE GENERAL CONTRACTOR.

ALL COSTS RESULTING FROM THE ABOVE REQUIREMENTS, EXCEPT AS NOTED, SHALL BE CONSIDERED TO BE INCLUDED IN THE LUMP SUM CONTRACT PRICE FOR ITEM 614 MAINTAINING TRAFFIC.

SPEEDINFO DEVICES WITHIN PROJECT LIMITS

THE CONTRACTOR SHALL TAKE MEASURES TO MAINTAIN THE PROPER OPERATION OF ANY SPEEDINFO DEVICES WITHIN THE PROJECT LIMITS. THE DEVICES ARE DOPPLER RADAR UNITS WHICH LOOK LIKE CYLINDRICAL TUBES WITH SOLAR PANELS ATTACHED TO THEM. THE SENSORS ARE IMPLEMENTED ON ALL INTERSTATES STATEWIDE AND OTHER MAJOR US AND STATE ROUTES IN URBAN AREAS, GENERALLY SPACED BETWEEN 1 TO 2 MILES APART, AND INSTALLED ON ANY EXISTING ODOT INFRASTRUCTURE (TYPICALLY OVERHEAD TRUSSES, CANTILEVERS, GROUND-MOUNTED SIGN SUPPORTS, OR LIGHT POLES). ODOT WILL COORDINATE THE RELOCATION OF ANY DEVICES THAT MAY BE AFFECTED BY THE CONTRACTOR'S OPERATION. THE CONTRACTOR SHALL NOT REMOVE THE DEVICES THEMSELVES. THE CONTRACTOR SHALL NOTIFY THE PROJECT ENGINEER A MINIMUM OF TEN CALENDAR DAYS PRIOR TO PERFORMING ANY WORK WHICH REQUIRES DEVICE RELOCATION. THE PROJECT ENGINEER SHALL THEN NOTIFY SPEEDINFO, INC. AND THE ODOT OFFICE OF TRAFFIC OPERATIONS OF ANY DEVICES THAT REQUIRE RELOCATION. THE CONTRACTOR SHOULD BE AWARE THAT SINCE SPEED DATA IS STILL DESIRABLE TO ODOT, THE PROJECT ENGINEER WILL ATTEMPT TO INFORM SPEEDINFO, INC. OF NEWLY AVAILABLE INSTALL LOCATIONS FOR THE SENSORS TO BE RELOCATED TO, WITH MINIMAL DOWNTIME.

IF IMMEDIATE ATTENTION TO A SPEEDINFO SENSOR IS REQUIRED, THE CONTRACTOR MAY DIRECTLY CONTACT THE REGIONAL INSTALLER FOR SPEEDINFO, INC. FROM THE PROVIDED CONTACT INFORMATION. THE REGIONAL INSTALLER WOULD BE ABLE TO PROVIDE THE QUICKEST POSSIBLE ATTENTION TO THE SITUATION. IF THE REGIONAL INSTALLER CANNOT BE REACHED, THE LIST OF STATEWIDE CONTACTS SHOULD BE USED IN THE ORDER IT IS PRESENTED. AN EMAIL INFORMING ALL PARTIES OF THE SITUATION SHOULD ALSO BE SENT AT THE EARLIEST CONVENIENCE.

1. REGIONAL CONTACTS

MATT SLUSHER, CAPITAL ELECTRIC
(937) 531-7518
mslusher@capitalelectric.com

JOE HUTSELL, CAPITAL ELECTRIC
(937) 604-5838
jhutsell@capitalelectric.com

2. STATEWIDE CONTACTS

CHARLIE ARMINGER, SPEEDINFO
OFFICE: (408) 333-9960
CELL: (408) 425-4684
carminger@speedinfo.com

BRYAN COMER, ODOT
(614) 387-1253
bryan.comer@dot.state.oh.us

JASON YERAY, ODOT
(614) 466-2168
jason.yeray@dot.state.oh.us

CALCULATED JAH
CHECKED JML

TRAFFIC - GENERAL NOTES

MAINTENANCE OF TRAFFIC

FRA-70-14.54

104
2317

PLOT.CEL
ms consultants, inc.
msconsultants.com
www.msconsultants.com
Ohio DOT Workspace
70\71 East Interchange 2E
1"
0.5"
0
Batchplot Spec: \\msconsultants.com\Files\Production\03\60\06634_2E\standards\plotdrv\batchplt.spc
Pen Table: \\msconsultants.com\Files\Standards\astm\ohdot\V8i\ms\plotting\pen\V8i_ms_std.tbl
Plot Driver: \\msconsultants.com\Files\Standards\astm\ohdot\v8i\ms\plotting\PDF.pltcfg
PDF: ohdotV8i
DCF: 60-06634_2E_Columbus
34" x 22"
Model: Sheet
Printed: 9/28/2018 @ 10:05:42 AM
File: N:\03\60\06634_2E\mot\sheets\105322MN0006.dgn
View: FENCE_VIEW1
By: kryan

METHOD OF PAYMENT

ALL WORK AND TRAFFIC CONTROL DEVICES SHALL BE IN ACCORDANCE WITH CMS 614 AND OTHER APPLICABLE PORTIONS OF THE SPECIFICATIONS, AS WELL AS THE OHIO MANUAL OF UNIFORM TRAFFIC CONTROL DEVICES.

PAYMENT FOR ALL LABOR, EQUIPMENT AND MATERIALS SHALL BE INCLUDED IN THE LUMP SUM CONTRACT PRICE FOR ITEM 614, MAINTAINING TRAFFIC, UNLESS SEPARATELY ITEMIZED IN THE PLAN.

ITEM 614 MAINTAINING TRAFFIC LUMP SUM

ITEM 614 - MAINTAINING TRAFFIC, MISC.: PORTABLE WATER FILLED BARRIER PROTECTED PEDESTRIAN WALKWAY

THE CONTRACTOR IS PERMITTED TO SUBSTITUTE WATER FILLED BARRIER WITH PORTABLE CONCRETE BARRIER OR PORTABLE METAL BARRIER, AT HIS OWN EXPENSE, AT ALL LOCATIONS WHERE WATER FILLED BARRIER IS SHOWN IN THE PLANS.

AT THE DIRECTION OF THE ENGINEER-IN-CHARGE THE CONTRACTOR SHALL CREATE A TEMPORARY PEDESTRIAN WALKWAY ON THE ROADWAY PAVEMENT. THE CONTRACTOR SHALL INSTALL PORTABLE WATER FILLED BARRIER TO PROTECT AND SEPARATE PEDESTRIANS FROM VEHICULAR TRAFFIC. ALL PORTABLE WATER FILLED BARRIER SHALL HAVE EXTERNAL STEEL RAILS OR INTERNAL STEEL FRAMEWORK. THE PEDESTRIAN PATHWAY SHALL BE A MINIMUM WIDTH OF FOUR FEET WIDE. IF THE PATHWAY EXCEEDS 200 FEET IN LENGTH, A PATHWAY WIDTH OF FIVE FOOT WIDE SHALL BE PROVIDED FOR A 10 FOOT RUNNING LENGTH AT 200 FOOT INTERVALS.

THE CONTRACTOR SHALL BE RESPONSIBLE FOR FURNISHING, INSTALLING, AND MAINTAINING THE WATER FILLED BARRIER FOR THE ENTIRE DURATION THAT THE PEDESTRIAN PATHWAY IS IN PLACE ON THE ROADWAY PAVEMENT. PRISMATIC REFLECTORS SHALL BE INSTALLED ON THE PORTABLE WATER FILLED BARRIER IN ACCORDANCE WITH ODOT STANDARD DRAWING MT-101.70. NO SEPARATE PAYMENT SHALL BE PROVIDED FOR PRISMATIC REFLECTORS. THE CONTRACTOR SHALL REMOVE THE WATER FILLED BARRIER WHEN THE PEDESTRIAN PATHWAY ON THE ROADWAY PAVEMENT IS NO LONGER REQUIRED, AS DETERMINED BY THE ENGINEER-IN-CHARGE.

AN IMPACT ATTENUATOR SHALL BE PROVIDED AT THE END OF THE PORTABLE WATER FILLED BARRIER IN THE DIRECTION OF ON-COMING TRAFFIC. THE ATTENUATOR SYSTEM SHALL BE INSTALLED IN ACCORDANCE WITH THE MANUFACTURE'S SPECIFICATIONS. THE CONTRACTOR SHALL BE RESPONSIBLE FOR INSPECTION, REPAIRING AND OTHERWISE RESTORING THE IMPACT ATTENUATOR IN ACCORDANCE WITH THE MANUFACTURER'S MAINTENANCE INSTRUCTIONS WHILE IT IS IN USE ON THE PROJECT. SUCH REPAIRS SHALL BE PERFORMED WITHIN 24 HOURS OF THE INCIDENT WHICH CAUSED DAMAGE TO THE PROJECT. IN ADDITION TO ANY EXTRA UNITS SUPPLIED FOR THIS PROJECT, THE CONTRACTOR SHALL BE RESPONSIBLE FOR SUPPLYING ALL NECESSARY MATERIALS, LABOR AND EQUIPMENT REQUIRED TO PERFORM THE ABOVE DESCRIBED RESTORATION OF THE ATTENUATOR.

SETUP OF WATER FILLED BARRIER PROTECTED PEDESTRIAN PATHWAY SHALL ONLY BE PROVIDED BY THE CONTRACTOR WHEN AUTHORIZED TO DO SO BY THE ENGINEER-IN-CHARGE.

PAYMENT FOR ITEM 614 - MAINTAINING TRAFFIC, MISC.: PORTABLE WATER FILLED BARRIER PROTECTED PEDESTRIAN WALKWAY SHALL INCLUDE ALL EQUIPMENT, LABOR, AND MATERIALS NECESSARY FOR THE COMPLETION OF THE WORK AS DETAILED ABOVE. PAYMENT SHALL BE PER LINEAR FOOT.

FOR BIDDING PURPOSES, THE CONTRACTOR SHOULD ESTIMATE PROVIDING A TEMPORARY PROTECTED PEDESTRIAN PATHWAY FOR THE DURATION OF SIDEWALK CLOSURES. THE COST OF MULTIPLE SETUPS AND TEAR-DOWNS OF THE BARRIER SHALL BE INCLUDED WITHIN THE PER LINEAR FOOT BID PRICE. A PER LINEAR FOOT CONTINGENCY ITEM HAS BEEN CARRIED TO THE GENERAL SUMMARY.

ITEM 614 - REPLACEMENT SIGN

FLATSHEET SIGNS FURNISHED BY THE CONTRACTOR IN ACCORDANCE WITH THE REQUIREMENTS OF THE PLANS, SPECIFICATIONS AND PROPOSAL WHICH BECOME DAMAGED BY TRAFFIC FOR REASONS BEYOND THE CONTROL OF THE CONTRACTOR SHALL BE REPLACED IN KIND WHEN ORDERED BY THE ENGINEER. REPLACEMENT SIGNS SHALL BE NEW. OTHER MATERIALS MAY BE IN USED, BUT GOOD, CONDITION SUBJECT TO APPROVAL BY THE ENGINEER.

PAYMENT FOR THE NEW SIGNS SHALL BE MADE AT THE CONTRACT PRICE PER EACH FOR ITEM 614, REPLACEMENT SIGN, AND SHALL INCLUDE THE COST OF REMOVING AND DISPOSING OF DAMAGED SIGNS, HARDWARE AND SUPPORTS, AND PROVIDING THE NECESSARY REPLACEMENT HARDWARE, SUPPORTS, ETC.

AN ESTIMATED QUANTITY OF 40 EACH HAS BEEN PROVIDED IN THE GENERAL SUMMARY.

ITEM 614 - REPLACEMENT DRUM

DRUMS FURNISHED BY THE CONTRACTOR IN ACCORDANCE WITH THE REQUIREMENTS OF THE PLANS, SPECIFICATIONS AND PROPOSAL WHICH BECOME DAMAGED BY TRAFFIC FOR REASONS BEYOND THE CONTROL OF THE CONTRACTOR SHALL BE REPLACED IN KIND WHEN ORDERED BY THE ENGINEER. REPLACEMENT DRUMS SHALL BE NEW.

PAYMENT FOR THE NEW DRUMS SHALL BE MADE AT THE CONTRACT PRICE PER EACH FOR ITEM 614, REPLACEMENT DRUM, AND SHALL INCLUDE THE COST OF REMOVING AND DISPOSING OF THE DAMAGED DRUM, AND PROVIDING AND MAINTAINING THE REPLACEMENT DRUM IN ACCORDANCE WITH THE CONTRACT REQUIREMENTS FOR THE ORIGINAL DRUM.

AN ESTIMATED QUANTITY OF 80 EACH HAS BEEN PROVIDED IN THE GENERAL SUMMARY.

DELINEATION OF PORTABLE AND PERMANENT BARRIER

BARRIER REFLECTORS AND OBJECT MARKERS SHALL BE INSTALLED ON ALL PORTABLE BARRIER (PB) USED FOR TRAFFIC CONTROL AND ON PERMANENT CONCRETE BARRIER (INCLUDING BRIDGE PARAPETS) LOCATED WITHIN 5 FEET OF THE EDGE OF THE ADJACENT TRAVEL LANE.
BARRIER REFLECTORS SHALL CONFORM TO C&MS 626, EXCEPT THAT THE SPACING SHALL BE AS PER TRAFFIC SCD MT-101.70. OBJECT MARKERS AND THEIR INSTALLATION SHALL CONFORM TO C&MS 614.03 AND SCD MT-101.70. WHEN THE PB CONTAINS GLARE SCREEN, ONE SET OF THREE VERTICAL STRIPES OF SHEETING SHALL BE CONSIDERED EQUIVALENT TO AN OBJECT MARKER, ONE-WAY.

BARRIER REFLECTORS SHALL BE INSTALLED IN ACCORDANCE WITH THE INCREASED BARRIER DELINEATION METHOD (TRIPLE STACKED) SHOWN ON SCD MT-101.70.

TRIPLE-STACKED BARRIER REFLECTORS SHALL CONSIST OF ALIGNING THREE BARRIER REFLECTORS VERTICALLY, AT LOCATIONS WHERE A SINGLE BARRIER REFLECTOR WOULD BE OTHERWISE ATTACHED. THERE SHALL BE NO OPEN SPACE BETWEEN THE ADJACENT BARRIER REFLECTORS. THE TRIPLE-STACKED BARRIER REFLECTORS SHALL CONFORM TO C&MS 626, EXCEPT THAT THEY SHALL BE SPACED AND ALIGNED PER TRAFFIC SCD MT-101.70.

BARRIER REFLECTORS AND OBJECT MARKERS INSTALLED ON ALL PORTABLE BARRIER HAVE BEEN QUANTIFIED IN THE MAINTENANCE OF TRAFFIC SUBSUMMARY. THE FOLLOWING QUANTITIES ARE PROVIDED AND CARRIED TO THE GENERAL SUMMARY FOR INSTALLATION OF BARRIER REFLECTORS AND OBJECT MARKERS ON EXISTING PERMANENT BARRIER.

ITEM 614, BARRIER REFLECTOR, TYPE B 516 EACH
ITEM 614, OBJECT MARKER, TWO-WAY 174 EACH

PAYMENT SHALL BE FULL COMPENSATION FOR ALL MATERIAL, LABOR, INCIDENTALS AND EQUIPMENT NECESSARY FOR FURNISHING, INSTALLING, MAINTAINING AND REMOVING EACH OF THE ABOVE ITEMS.

ITEM 614 - MAINTAINING TRAFFIC MISC: BRIDGE DECK AND PAVEMENT PATCHING:

THIS WORK WILL BE AS DIRECTED BY THE ENGINEER AND WILL INCLUDE ALL ASSOCIATED MOT COSTS WITH THE ACTIVITY. THE COST FOR EACH ITEM SHALL BE $1.00. THE FIXED AMOUNT SHOWN IN THE PROPOSAL IS INCLUDED (AS ANY OTHER BID ITEMS) IN THE TOTAL BID AMOUNT. THIS FIXED AMOUNT IS THE DEPARTMENT'S ESTIMATE OF THE TOTAL COST OF BRIDGE DECK AND PAVEMENT PATCHING WORK REQUIRED TO BE PERFORMED WITHIN THE WORK LIMITS AS DIRECTED BY THE ENGINEER. C&MS TABLE 104.02-2 DOES NOT APPLY TO REDUCTIONS IN THIS CONTRACT ITEM. FORCE ACCOUNT RECORDS SHALL BE KEPT TO TRACK AND ULTIMATELY DETERMINE THE AMOUNT OF THE PAY ITEM USED. THE WORK ITEM SHALL INCLUDE ALL WORK, AS DIRECTED BY THE ENGINEER, NEEDED TO RE-ESTABLISH A REASONABLY SAFE AND PASSABLE CONDITION OF THE DECK AND/OR PAVEMENT FOR THE DURATION OF THE REQUIRED UPCOMING MOT PHASES. THE CONTRACTOR SHALL MEET WITH THE ENGINEER TO ESTABLISH THE WORK AFTER EXECUTION OF THE CONTRACT. THE CONTRACTOR'S PROPOSED PHASING AND PHASING DURATIONS WILL ASSIST THE ENGINEER IN DETERMINING THE EXTENT OF THE WORK. THIS WORK IS ONLY INTENDED TO ESTABLISH A SAFE AND DRIVABLE CONDITION FOR THE DURATION OF THE PROJECT. THIS DOES NOT RELIEVE THE CONTRACTOR OF THE RESPONSIBILITIES OF 614.02B.

ITEM 614 - MAINTAINING TRAFFIC MISC: BRIDGE DECK AND PAVEMENT PATCHING = $75,000 EACH.

DELINEATION OF TEMPORARY AND PERMANENT GUARDRAIL

BARRIER REFLECTORS SHALL BE INSTALLED ON ALL TEMPORARY GUARDRAIL USED FOR TRAFFIC CONTROL AND ON ALL PERMANENT GUARDRAIL LOCATED WITHIN 5 FEET OF THE EDGE OF THE ADJACENT TRAVEL LANE. BARRIER REFLECTORS SHALL CONFORM TO C&MS 626.

OBJECT MARKERS SHALL BE INSTALLED ON ALL TEMPORARY AND PERMANENT GUARDRAIL LOCATED WITHIN 5 FEET OF THE EDGE OF THE ADJACENT TRAVEL LANE. GUARDRAIL-MOUNTING OF OBJECT MARKERS SHALL BE MADE BY INSTALLING THE OBJECT MARKERS ON THE EXTENSION BLOCKS RATHER THAN DIRECTLY ONTO THE GUARDRAIL ITSELF. OBJECT MARKERS SHALL CONFORM TO C&MS 614.03 AND THE SPACING SHALL BE APPROXIMATELY 50 FEET.

THE FOLLOWING ESTIMATED QUANTITIES HAVE BEEN INCLUDED IN THE PLANS AND CARRIED TO THE GENERAL SUMMARY:
ITEM 614, BARRIER REFLECTOR, TYPE A 101 EACH
ITEM 614, OBJECT MARKER, TWO-WAY 101 EACH

PAYMENT SHALL BE FULL COMPENSATION FOR ALL MATERIAL, LABOR, INCIDENTALS AND EQUIPMENT NECESSARY FOR FURNISHING, INSTALLING, MAINTAINING AND REMOVING THE ABOVE ITEM(S).

ITEM 614 - WORK ZONE IMPACT ATTENUATOR FOR 24" WIDE HAZARDS (UNIDIRECTIONAL OR BIDIRECTIONAL)

THIS ITEM SHALL CONSIST OF FURNISHING AND INSTALLING A NON-GATING IMPACT ATTENUATOR. FURNISH AN IMPACT ATTENUATOR FROM THE OFFICE OF ROADWAY ENGINEERING'S APPROVED LIST FOR WORK ZONE IMPACT ATTENUATORS, FROM THE ROADWAY STANDARD'S WEB PAGE FOR ROADWAY STANDARDS APPROVED PRODUCTS.

INSTALLATION SHALL BE AT THE LOCATIONS SPECIFIED IN THE PLANS IN ACCORDANCE WITH THE MANUFACTURER'S SPECIFICATIONS.

THE CONTRACTOR SHALL REPAIR OR REPLACE A DAMAGED UNIT WITHIN 24 HOURS OF A DAMAGING IMPACT.

WHEN BIDIRECTIONAL DESIGNS ARE SPECIFIED, THE CONTRACTOR SHALL SUPPLY APPROPRIATE TRANSITIONS.

WHEN GATING IMPACT ATTENUATORS ARE DESIRED, THE CONTRACTOR SHALL SUBMIT DOCUMENTATION TO THE ENGINEER FOR ACCEPTANCE.

THE COST FOR THE ADDITIONAL BARRIER REQUIRED FOR A GATING IMPACT ATTENUATOR SHALL BE INCLUDED IN THE COST OF THE GATING IMPACT ATTENUATOR.

PAYMENT FOR THE ABOVE WORK SHALL BE MADE AT THE UNIT PRICE BID AND SHALL INCLUDE ALL LABOR, TOOLS, EQUIPMENT AND MATERIALS NECESSARY TO CONSTRUCT AND MAINTAIN A COMPLETE AND FUNCTIONAL IMPACT ATTENUATOR SYSTEM, INCLUDING ALL RELATED BACKUPS, TRANSITIONS, LEVELING PADS, HARDWARE AND GRADING, NOT SEPARATELY SPECIFIED, AS REQUIRED BY THE MANUFACTURER.

CALCULATED JAH
CHECKED JML

MAINTENANCE OF TRAFFIC - GENERAL NOTES

FRA-70-14.54

ms consultants, inc.

PLOT.CEL
ms consultants, inc.
msconsultants.com
www.msconsultants.com
Ohio DOT Workspace
70\71 East Interchange 2E
1"
0.5"
0
PDF: ohdot\V8i
PDF: 60-06634_2E_Columbus
Batchplot Spec: \\msconsultants.com\files\production\03\60\06634_2E\standards\plotdrv\batchplt.spc
Pen Table: \\msconsultants.com\files\Standards\ustn\ohdot\V8i\ms\plotting\pen\V8i_ms_std.tbl
Plot Driver: \\msconsultants.com\files\Standards\ustn\ohdot\v8i\ms\plotting\PDF.pltcfg
34" x 22"
View: FENCE_VIEW1
By: kryan
Model: Sheet @ 10:05:44 AM
Printed: 9/28/2018
File: N:\03\60\06634_2E\mot\sheets\105228MN0007.dgn

ITEM 614 - WORK ZONE SPEED LIMIT SIGN

THE CONTRACTOR SHALL FURNISH, INSTALL, MAINTAIN, COVER DURING SUSPENSION OF WORK, AND SUBSEQUENTLY REMOVE WORK ZONE SPEED LIMIT (R2-1) (45 AND 55 SPEED LIMIT) SIGNS AND SUPPORTS WITHIN THE WORK LIMITS IN ACCORDANCE WITH THE FOLLOWING REQUIREMENTS:

THE CONTRACTOR SHALL COVER OR REMOVE ANY EXISTING SPEED LIMIT SIGNS WITHIN THE REDUCED SPEED ZONE(S). THESE SIGNS SHALL BE RESTORED DURING SUSPENSION OR TERMINATION OF THE REDUCED SPEED LIMIT. THE EXPENSE OF COVERING OR REMOVAL AND RESTORATION OF EXISTING SPEED LIMIT OR MINIMUM SPEED LIMIT SIGNS SHALL BE INCLUDED IN THE PAY ITEM FOR THE WORK ZONE SPEED LIMIT SIGNS.

THE WORK ZONE SPEED LIMIT SIGNS MAY BE ERECTED OR UNCOVERED NO MORE THAN FOUR HOURS BEFORE THE ACTUAL START OF WORK THAT CAUSES THE WARRANTING CONDITION(S) TO OCCUR. THE SIGNS SHALL BE REMOVED OR COVERED NO LATER THAN FOUR HOURS FOLLOWING REMOVAL OF THE WARRANTING CONDITION(S), OR SOONER AS DIRECTED BY THE ENGINEER. TEMPORARY SIGN COVERING AND UNCOVERING DUE TO TEMPORARY REMOVAL OF WARRANTING CONDITION(S) SHALL BE GUIDED BY THE FOUR-HOUR LIMITATIONS STATED ABOVE.

CONSTRUCTION AND MATERIAL SPECIFICATIONS ITEM 614, PARAGRAPH 614.02(B), INDICATES THAT THE TWO DIRECTIONS OF A DIVIDED HIGHWAY ARE CONSIDERED SEPARATE HIGHWAY SECTIONS. THEREFORE, IF THE WORK ON A MULTI-LANE DIVIDED HIGHWAY IS LIMITED TO ONLY ONE DIRECTION, A SPEED REDUCTION IN THE DIRECTION OF THE WORK DOES NOT AUTOMATICALLY CONSTITUTE A SPEED REDUCTION IN THE OPPOSITE DIRECTION. A SPEED LIMIT REDUCTION IN THE OPPOSITE DIRECTION, IN SUCH CASE, IS APPROPRIATE ONLY IF CONDITIONS ARE EXPECTED TO HAVE AN IMPACT ON THE DIRECTIONAL TRAFFIC FLOW, AS DIRECTED BY THE ENGINEER.

THE CONTRACTOR SHALL ERECT A WORK ZONE SPEED LIMIT SIGN IN ADVANCE OF THE WARRANTING CONDITION, AS DETAILED IN THE PLANS OR AS DIRECTED BY THE ENGINEER. THE SIGN SHALL BE MOUNTED ON BOTH SIDES OF A DIRECTIONAL ROADWAY OF DIVIDED HIGHWAYS. THE FIRST WORK ZONE SPEED LIMIT SIGN SHALL BE PLACED APPROXIMATELY 500 FEET IN ADVANCE OF THE LANE REDUCTION, SHIFT TAPER, OR OTHER ROADWAY OR SHOULDER RESTRICTION THAT WARRANTED THE WORK ZONE SPEED ZONE. ON UNDIVIDED HIGHWAYS THE SIGN SHALL BE MOUNTED ON THE RIGHT SIDE, APPROXIMATELY 250 FEET IN ADVANCE OF SUCH RESTRICTIONS. THE SIGN SHALL BE REPEATED EVERY 1 MILE FOR 60 AND 55 MPH ZONES AND EVERY ONE-HALF MILE FOR 50 MPH AND 45 MPH ZONES. THESE SIGNS SHALL ALSO BE ERECTED IMMEDIATELY AFTER EACH OPEN ENTRANCE RAMP WITHIN THE ZONE.

THE SPEED LIMIT REDUCTION SHALL BE LIMITED TO ONLY THE PORTION OF THE PROJECT AND THE WORK THAT WARRANTED THE WORK ZONE SPEED LIMIT REDUCTION.

SPEED REDUCTION (SPEED ZONE AHEAD SYMBOL) SIGNS (W3-5) SHALL BE ERECTED IN ADVANCE OF THE SPEED REDUCTION, APPROXIMATELY 1250 FEET ON MULTI-LANE HIGHWAYS AND 500 FEET ON TWO-LANE HIGHWAYS.

A SIGN(S) (R2-1) TO INDICATE THE RESUMPTION OF THE STATUTORY SPEED LIMIT SHALL BE ERECTED AT THE END OF ANY REDUCED SPEED ZONE. THE CONTRACTOR MAY USE SIGNS AND SUPPORTS IN USED, BUT GOOD CONDITION, PROVIDED THE SIGNS MEET CURRENT ODOT SPECIFICATIONS. SIGN FACES SHALL BE RETROREFLECTORIZED WITH TYPE G SHEETING COMPLYING WITH THE REQUIREMENTS OF CMS 730.19.

WORK ZONE SPEED LIMIT SIGNS SHALL BE MOUNTED ON TWO ITEM 630, GROUND MOUNTED SUPPORTS, NO. 3 POSTS, UNLESS MOUNTED ON A TEMPORARY SIGN SUPPORT PER SCD MT 105.10.

WORK ZONE SPEED LIMIT AND RELATED SIGN SIZES, PLACEMENT, SUPPORTS, ETC SHALL BE PER THE OMUTCD, WITH TWO EXCEPTIONS: 1) EXPRESSWAY SIZE SPEED LIMIT SIGNS MAY BE USED ON FREEWAYS AND EXPRESSWAYS, IF NECESSARY; 2) THE HEIGHT OF SIGNS MOUNTED ON PORTABLE SUPPORTS SHOULD BE THE HEIGHT REQUIRED FOR GROUND-MOUNTED SIGNS BUT SHALL NOT BE MORE THAN 1 FOOT LOWER THAN THE HEIGHT REQUIRED BY THE OMUTCD, OR AS DIRECTED BY THE ENGINEER. PORTABLE SUPPORTS SHOULD NOT BE USED FOR A DURATION OF MORE THAN 3 DAYS.

WORK ZONE SPEED LIMIT SIGNS AND SUPPORTS WILL BE MEASURED AS THE NUMBER OF SIGN INSTALLATIONS, INCLUDING THE SIGNS AND NECESSARY SUPPORTS. IF A SIGN AND SUPPORT COMBINATION IS REMOVED AND REERECTED AT ANOTHER LOCATION WITHIN THE PROJECT DUE TO CHANGES IN THE SPEED ZONE AS DETAILED IN THE PLANS OR AS DIRECTED BY THE ENGINEER, IT SHALL BE CONSIDERED ANOTHER UNIT.

PAYMENT FOR ACCEPTED QUANTITIES, COMPLETE IN PLACE, WILL BE MADE AT THE CONTRACT UNIT PRICE. PAYMENT SHALL BE FULL COMPENSATION FOR ALL MATERIALS, LABOR, INCIDENTALS AND EQUIPMENT FOR FURNISHING, ERECTING, MAINTAINING, COVERING DURING SUSPENSION OF WORK, AND REMOVING THE SIGNS AND SUPPORTS. SPEED LIMIT SIGNING FOR THE POINT OF RESUMPTION OF THE STATUTORY SPEED LIMIT SHALL BE PAID FOR AS WORK ZONE SPEED LIMIT SIGNS. THE FOLLOWING ESTIMATED QUANTITY HAS BEEN CARRIED TO THE GENERAL SUMMARY.

ITEM 614, WORK ZONE SPEED LIMIT SIGN 9 EACH
ITEM 614, SPEED ZONE AHEAD SYMBOL SIGN 3 EACH

THE FOLLOWING TABLE PROVIDES DETAILS ON WORK ZONE SPEED ZONES APPROVED FOR USE ON THIS PROJECT:

WZSZ REVISION NUMBER	COUNTY & ROUTE	SLM		PHASE/PART & DIRECTION	APPROVED SPEED LIMIT (MPH)	SPECIFIC WARRANTING CONDITIONS AND FACTORS
		FROM	TO			
T-35573	FRA-70	100.20	102.10	ALL, EB & WB	45	LANE RESTRICTIONS AND WIDTH REDUCTION
T-35572	FRA-71	107.90	108.37	ALL, NB & SB	45	LANE RESTRICTIONS AND WIDTH REDUCTION

ITEM 614 - WORK ZONE INCREASED PENALTIES SIGN (R11-H5A)

R11-H5A-48 SIGNS SHALL BE FURNISHED, ERECTED, AND MAINTAINED IN GOOD CONDITION AND/OR REPLACED AS NECESSARY AND SUBSEQUENTLY REMOVED BY THE CONTRACTOR. SIGNS SHALL BE MOUNTED AT THE APPROPRIATE OFFSETS AND ELEVATIONS AS PRESCRIBED BY THE OHIO MANUAL OF UNIFORM TRAFFIC CONTROL DEVICES. THEY SHALL BE MAINTAINED ON SUPPORTS MEETING CURRENT SAFETY CRITERIA.

THE SIGNS MAY BE ERECTED OR UNCOVERED NO MORE THAN FOUR HOURS BEFORE THE ACTUAL START OF WORK. THE SIGNS SHALL BE REMOVED OR COVERED NO LATER THAN FOUR HOURS FOLLOWING RESTORATION OF ALL LANES TO TRAFFIC WITH NO RESTRICTIONS, OR SOONER AS DIRECTED BY THE ENGINEER. TEMPORARY SIGN COVERING AND UNCOVERING DUE TO TEMPORARY LANE RESTORATIONS SHALL BE GUIDED BY THE FOUR-HOUR LIMITATIONS STATED ABOVE. SUCH LANE RESTORATIONS SHOULD BE EXPECTED TO REMAIN IN EFFECT FOR 30 OR MORE CONSECUTIVE CALENDAR DAYS, SUCH AS DURING WINTER SHUT-DOWNS.

THE SIGNS ON THE MAINLINE SHALL BE DUAL MOUNTED UNLESS NOT PHYSICALLY POSSIBLE. THE FIRST SIGN SHALL BE PLACED BETWEEN THE ROAD WORK AHEAD (W20-1) SIGN AND THE NEXT SIGN IN THE SEQUENCE. SIGNS SHALL BE ERECTED ON EACH ENTRANCE RAMP AND EVERY 2 MILES THROUGH THE CONSTRUCTION WORK LIMITS. SIGNS ON THE MAINLINE SHALL BE R11-H5A-48. SIGNS USED ON THE RAMPS SHALL BE R11-H5A-24. R11-H5A-24 SIGNS MAY BE USED IN THE MEDIAN IN LIEU OF R11-H5A-48 SIGNS IF IT IS NOT PHYSICALLY POSSIBLE TO PROVIDE R11-H5A-48 SIGNS IN THE MEDIAN.

THE CONTRACTOR MAY USE SIGNS AND SUPPORTS IN USED, BUT GOOD, CONDITION PROVIDED THE SIGNS MEET CURRENT ODOT SPECIFICATIONS. SIGN FACES SHALL BE RETROREFLECTORIZED WITH TYPE G SHEETING COMPLYING WITH THE REQUIREMENTS OF C&MS 730.19.

WORK ZONE INCREASED PENALTIES SIGNS AND SUPPORTS WILL BE MEASURED AS THE NUMBER OF SIGN INSTALLATIONS, INCLUDING THE SIGN AND NECESSARY SUPPORTS. IF A SIGN AND SUPPORT COMBINATION IS REMOVED AND REERECTED AT ANOTHER LOCATION AS DIRECTED BY THE ENGINEER, IT SHALL BE CONSIDERED ANOTHER UNIT.

PAYMENT FOR ACCEPTED QUANTITIES, COMPLETE, IN PLACE WILL BE MADE AT THE CONTRACT UNIT PRICE. PAYMENT SHALL BE FULL COMPENSATION FOR ALL MATERIALS, LABOR, INCIDENTALS AND EQUIPMENT FOR FURNISHING, ERECTING, MAINTAINING, COVERING DURING SUSPENSION OF WORK, AND REMOVAL OF THE SIGN
AND SUPPORT.

ITEM 614, WORK ZONE INCREASED PENALTIES SIGN 9 EACH

ITEM 614 - DETOUR SIGNING

SIZE AND PLACEMENT OF DETOUR SIGNS (M4-9) SHOULD FOLLOW THE REQUIREMENTS OF THE OMUTCD SECTION 6F.03, SECTION 2A.11 AND TABLE 6F.01 UNLESS OTHERWISE SPECIFIED IN THE PLANS. DETOUR SIGNING SHALL PROVIDE DRIVERS ADEQUATE TIME TO CLEARLY READ THE SIGNS AND MAKE THE PROPER DECISIONS AT EACH REQUIRED TURNING MOVEMENT. THE DESIGNATED DETOUR ROUTE SHALL BE SIGNED IN ACCORDANCE WITH THE REQUIREMENTS BELOW:

- APPROXIMATELY 1500 FEET PRIOR TO TIP OF THE PAINTED GORE AT AN INTERCHANGE WHEN EXITING A HIGH SPEED (45 MPH OR HIGHER) FACILITY.

- AT OR NEAR THE EXISTING SIGN IN THE GORE OF AN INTERCHANGE RAMP.

- AT OR NEAR THE FIRST EXISTING LANE ASSIGNMENT SIGN ON AN INTERCHANGE EXIT RAMP.

- AT OR NEAR THE EXISTING LANE ASSIGNMENT SIGN OR EXISTING ROUTE MARKER AT THE END OF AN EXIT RAMP.

- APPROXIMATELY 500 FEET PRIOR TO A REQUIRED TURN AT AN INTERSECTION NOT CONTROLLED BY A STOP SIGN (FOR 45 MPH OR HIGHER ONLY).

- AT OR NEAR THE EXISTING LANE ASSIGNMENT SIGN OR EXISTING ROUTE MARKER AT AN INTERSECTION.

- EVERY TWO MILES ALONG A TANGENT SECTION BETWEEN TURNING MOVEMENTS OUTSIDE A CITY.

- EVERY TWO BLOCKS ALONG A TANGENT SECTION BETWEEN TURNING MOVEMENTS WITHIN A CITY.

- AT ANY OTHER INTERSECTION OR DECISION POINT WHERE THE DETOUR ROUTE IS CONTRARY TO THE NORMAL, EXPECTED TURNING MANEUVER OR OTHERWISE UNCLEAR.

DETOUR SIGNS SHALL BE PLACED, WHEN POSSIBLE, NEXT TO BUT NOT BLOCKING EXISTING ROUTE MARKERS OR LANE ASSIGNMENT SIGNS. DETOUR SIGNS SHALL NOT OBSCURE OR BE OBSCURED BY OTHER EXISTING OR TEMPORARY SIGNS.

DETOUR SIGNS SHALL BE ERECTED AND/OR UNCOVERED PRIOR TO THE ROAD OR RAMP BEING CLOSED TO TRAFFIC BUT NO EARLIER THAN FOUR HOURS PRIOR TO THE CLOSURE. DETOUR SIGNS SHALL BE COVERED AND/OR REMOVED NO LATER THAN FOUR HOURS FOLLOWING THE ROAD OR RAMP RE-OPENING TO TRAFFIC.

PAYMENT FOR ACCEPTED QUANTITIES WILL BE MADE AT THE CONTRACT UNIT PRICE. PAYMENT SHALL BE FOR ALL MATERIALS, LABOR, INCIDENTALS AND EQUIPMENT FOR FURNISHING, PROPER SIGN PLACEMENT AND SIZING, TIMELY ERECTING AND/OR UNCOVERING OF SIGNS, MAINTAINING SIGNS, AND TIMELY COVERING AND/OR REMOVING SIGNS AND SUPPORTS.

THE FOLLOWING ESTIMATED QUANTITIES HAVE BEEN CARRIED TO THE GENERAL SUMMARY.

ITEM 614 - DETOUR SIGNING LUMP SUM

CALCULATED JAH CHECKED JML

MAINTENANCE OF TRAFFIC - GENERAL NOTES

FRA-70-14.54

ms consultants, inc.

PLOT.CEL
ms consultants, inc.
msconsultants.com
www.msconsultants.com
Ohio DOT Workspace
70\71 East Interchange 2E
1" 0 0.5"
Batchplot Spec: \\msconsultants.com\files\production\03\60\06634_2E\standards\odot\batchplt_sec
Pen Table: \\msconsultants.com\files\Production\03\60\06634_2E\deliverables\2019-02-26 ADD\ms_ohdot\v8i\dgn\ms_std.tbl
Plot Driver: \\msconsultants.com\files\Standards\usa\ohdot\v8i\ms\plotting\PDF.pltcfg
Model: Sheet @ 12:21:19 PM View: SHEET
Printed: 2/27/2019 By: hbrendinger
File: \\msconsultants.com\files\Production\03\60\06634_2E\mot\sheets\105322NN0008.dgn
34" x 22"

ITEM 614 - PORTABLE CHANGEABLE MESSAGE SIGNS, AS PER PLAN

THE CONTRACTOR SHALL FURNISH, INSTALL, MAINTAIN AND REMOVE, WHEN NO LONGER NEEDED, A CHANGEABLE MESSAGE SIGN. THE SIGN SHALL BE OF A TYPE SHOWN ON A LIST OF APPROVED PCMS UNITS AVAILABLE ON THE OFFICE OF MATERIALS MANAGEMENT WEB PAGE. THE LIST CONTAINS CLASS A AND B UNITS WITH MINIMUM LEGIBILITY DISTANCES OF 800 FEET AND 650 FEET, RESPECTIVELY.

EACH SIGN SHALL BE TRAILER-MOUNTED AND EQUIPPED WITH A FUNCTIONAL DIMMING MECHANISM, TO DIM THE SIGN DURING DARKNESS, AND A TAMPER AND VANDAL PROOF ENCLOSURE. EACH SIGN SHALL BE PROVIDED WITH APPROPRIATE TRAINING AND OPERATION INSTRUCTIONS TO ENABLE ON-SITE PERSONNEL TO OPERATE AND TROUBLESHOOT THE UNIT. THE SIGN SHALL ALSO BE CAPABLE OF BEING POWERED BY AN ELECTRICAL SERVICE DROP FROM A LOCAL UTILITY COMPANY. THE PCMS SHALL BE DELINEATED IN ACCORDANCE WITH C&MS 614.03.

THE PROBABLE PCMS LOCATIONS AND WORK LIMITS FOR THOSE LOCATIONS ARE SHOWN ON THE MAINTENANCE OF TRAFFIC AND DETOUR PLAN SHEETS. PLACEMENT, OPERATION, MAINTENANCE AND ALL ACTIVATION OF THE SIGNS BY THE CONTRACTOR SHALL BE AS DIRECTED BY THE ENGINEER. THE PCMS SHALL BE LOCATED IN A HIGHLY VISIBLE POSITION YET PROTECTED FROM TRAFFIC. THE CONTRACTOR SHALL, AT THE DIRECTION OF THE ENGINEER, RELOCATE THE PCMS TO IMPROVE VISIBILITY OR ACCOMMODATE CHANGED CONDITIONS. WHEN NOT IN USE, THE PCMS SHALL BE TURNED OFF. ADDITIONALLY, WHEN NOT IN USE FOR EXTENDED PERIODS OF TIME, THE PCMS SHALL BE TURNED AWAY FROM ALL TRAFFIC.

THE ENGINEER SHALL BE PROVIDED ACCESS TO EACH SIGN UNIT AND SHALL BE PROVIDED WITH APPROPRIATE TRAINING AND OPERATION INSTRUCTIONS TO ENABLE ODOT PERSONNEL TO OPERATE AND TROUBLESHOOT THE UNIT, AND TO REVISE SIGN MESSAGES, IF NECESSARY.

ALL MESSAGES TO BE DISPLAYED ON THE SIGN WILL BE PROVIDED BY THE ENGINEER. A LIST OF ALL REQUIRED PRE-PROGRAMMED MESSAGES WILL BE GIVEN TO THE CONTRACTOR AT THE PROJECT PRECONSTRUCTION CONFERENCE. THE SIGN SHALL HAVE THE CAPABILITY TO STORE UP TO 99 MESSAGES. MESSAGE MEMORY OR PRE-PROGRAMMED DISPLAYS SHALL NOT BE LOST AS A RESULT OF POWER FAILURES TO THE ON-BOARD COMPUTER. THE SIGN LEGEND SHALL BE CAPABLE OF BEING CHANGED IN THE FIELD. THREE-LINE PRESENTATION FORMATS WITH UP TO SIX MESSAGE PHASES SHALL BE SUPPORTED. PCMS FORMAT SHALL PERMIT THE COMPLETE MESSAGE FOR EACH PHASE TO BE READ AT LEAST TWICE.

THE PCMS SHALL CONTAIN AN ACCURATE CLOCK AND PROGRAMMING LOGIC WHICH WILL ALLOW THE SIGN TO BE ACTIVATED, DEACTIVATED OR MESSAGES CHANGED AUTOMATICALLY AT DIFFERENT TIMES OF THE DAY FOR DIFFERENT DAYS OF THE WEEK.

THE PCMS SHALL CONTAIN A CELLULAR TELEPHONE DATA LINK WHICH WILL (IN ACTIVE CELLULAR PHONE AREAS) ALLOW REMOTE SIGN ACTIVATION, MESSAGE CHANGES, MESSAGE ADDITIONS AND REVISIONS TO TIME OF DAY PROGRAMS. THE SYSTEM SHALL ALSO PERMIT VERIFICATION OF CURRENT AND PROGRAMMED MESSAGES. ONE REMOTE DATA INPUT DEVICE (LAPTOP COMPUTER PLUS MODEM OR EQUIVALENT) SHALL BE FURNISHED FOR USE BY THE DISTRICT TRAFFIC ENGINEER, OR EQUIVALENT, AND SHALL BE INSURED AGAINST THEFT.

THE PCMS UNIT SHALL BE MAINTAINED IN GOOD WORKING ORDER BY THE CONTRACTOR IN ACCORDANCE WITH THE PROVISIONS OF C&MS 614.07. THE CONTRACTOR SHALL, PRIOR TO ACTIVATING THE UNIT, MAKE ARRANGEMENTS, WITH AN AUTHORIZED SERVICE AGENT FOR THE PCMS, TO ASSURE PROMPT SERVICE IN THE EVENT OF FAILURE. ANY FAILURE SHALL NOT RESULT IN THE SIGN BEING OUT OF SERVICE FOR MORE THAN 12 HOURS, INCLUDING WEEKENDS. FAILURE TO COMPLY MAY RESULT IN AN ORDER TO STOP WORK AND OPEN ALL TRAFFIC LANES AND/OR IN THE DEPARTMENT TAKING APPROPRIATE ACTION TO SAFELY CONTROL TRAFFIC. THE ENTIRE COST TO CONTROL TRAFFIC, ACCRUED BY THE DEPARTMENT DUE TO THE CONTRACTOR S NONCOMPLIANCE, WILL BE DEDUCTED FROM MONEYS DUE, OR TO BECOME DUE THE CONTRACTOR ON HIS CONTRACT.

THE CONTRACTOR SHALL BE RESPONSIBLE FOR 24-HOUR-PER-DAY OPERATION AND MAINTENANCE OF THESE SIGNS ON THE PROJECT FOR THE DURATION OF THE PHASES WHEN THE PLAN REQUIRES THEIR USE.

PAYMENT FOR THE ABOVE DESCRIBED ITEM SHALL BE AT THE CONTRACT UNIT PRICE. PAYMENT SHALL INCLUDE ALL LABOR, MATERIALS, EQUIPMENT, FUELS, LUBRICATING OILS, SOFTWARE, HARDWARE AND INCIDENTALS TO PERFORM THE ABOVE DESCRIBED WORK.

ITEM 614, PORTABLE CHANGEABLE MESSAGE SIGN, AS PER PLAN
510 SIGN MONTH ASSUMING 17 PCMS SIGNS FOR 30 MONTHS

ITEM 614 WORKZONE LANE LINE, CLASS I, 6", 740.06, TYPE I
ITEM 614 WORKZONE CHANNELIZING LINE, CLASS I, 8", 740.06, TYPE I
ITEM 614 WORKZONE DOTTED LINE, CLASS I, 740.06, TYPE I
ITEM 614 WORKZONE ARROW, CLASS I, 740.06, TYPE I

THE CONTRACTOR SHALL FURNISH, INSTALL, MAINTAIN AND REMOVE, WHEN NO LONGER NEEDED TEMPORARY TAPE ON SUEFACE COURSES THAT ARE NOT BEING REPAVED.

THE QUANITITES LISTED BELOW ARE CARRIED TO THE GENERAL SUMMARY SHEET.

ITEM 614 WORKZONE LANE LINE, CLASS I, 6", 740.06, TYPE I - 0.5 MILES
ITEM 614 WORKZONE CHANNELIZING LINE, CLASS I, 8", 740.06, TYPE I - 1000 FT
ITEM 614 WORKZONE DOTTED LINE, CLASS I, 740.06, TYPE I - 1000 FT
ITEM 614 WORKZONE ARROW, CLASS I, 740.06, TYPE I - 10 EACH

ITEM 614 - LAW ENFORCEMENT OFFICER (WITH PATROL CAR) FOR ASSISTANCE DURING CONSTRUCTION OPERATIONS

USE OF LAW ENFORCEMENT OFFICERS (LEOS) BY CONTRACTORS OTHER THAN THE USES SPECIFIED BELOW WILL NOT BE PERMITTED AT PROJECT COST. LEOS SHOULD NOT BE USED WHERE THE OMUTCD INTENDS THAT FLAGGERS BE USED.

IN ADDITION TO THE REQUIREMENTS OF C&MS 614 AND THE OMUTCD, A UNIFORMED LEO WITH AN OFFICIAL PATROL CAR (CAR WITH TOP-MOUNTED EMERGENCY FLASHING LIGHTS AND COMPLETE MARKINGS OF THE APPROPRIATE LAW ENFORCEMENT AGENCY) SHALL BE PROVIDED FOR THE FOLLOWING TRAFFIC CONTROL TASKS:

- DURING THE ENTIRE ADVANCE PREPARATION AND CLOSURE SEQUENCE WHERE COMPLETE BLOCKAGE OF TRAFFIC IS REQUIRED.

- DURING A TRAFFIC SIGNAL INSTALLATION WHEN IMPACTING THE NORMAL FUNCTION OF THE SIGNAL OR THE FLOW OF TRAFFIC, OR WHEN TRAFFIC NEEDS TO BE DIRECTED THROUGH AN ENERGIZED TRAFFIC SIGNAL CONTRARY TO THE SIGNAL DISPLAY (E.G., DIRECTING MOTORISTS THROUGH A RED LIGHT).

IN ADDITION TO THE REQUIREMENT OF C&MS 614 AND THE OMUTCD, A UNIFORMED LEO WITH AN OFFICIAL PATROL CAR (CAR WITH TOP-MOUNTED EMERGENCY FLASHING LIGHTS AND COMPLETE MARKINGS OF THE APPROPRIATE LAW ENFORCEMENT AGENCY) SHOULD BE PROVIDED FOR THE FOLLOWING TRAFFIC CONTROL TASKS AS APPROVED BY THE ENGINEER:

- FOR LANE CLOSURES: DURING INITIAL SET-UP PERIODS, TEAR DOWN PERIODS, SUBSTANTIAL SHIFTS OF A CLOSURE POINT OR WHEN NEW LANE CLOSURE ARRANGEMENTS ARE INITIATED FOR LONG-TERM LANE CLOSURES/SHIFTS (FOR THE FIRST AND LAST DAY OF MAJOR CHANGES IN TRAFFIC CONTROL SETUP).

IN GENERAL, LEOS SHOULD BE POSITIONED IN ADVANCE OF AND ON THE SAME SIDE AS THE LANE RESTRICTION OR AT THE POINT OF ROAD CLOSURE, AND TO MANUALLY CONTROL TRAFFIC MOVEMENTS THROUGH SIGNALIZED INTERSECTIONS IN WORK ZONES.

LEOS SHOULD NOT FORGO THEIR TRAFFIC CONTROL RESPONSIBILITIES TO APPREHEND MOTORISTS FOR ROUTINE TRAFFIC VIOLATIONS. HOWEVER, IF A MOTORIST'S ACTIONS ARE CONSIDERED TO BE RECKLESS, THEN PURSUIT OF THE MOTORIST IS APPROPRIATE.

THE LEOS WORK AT THE DIRECTION OF THE CONTRACTOR. THE CONTRACTOR IS RESPONSIBLE FOR SECURING THE SERVICES OF THE LEOS WITH THE APPROPRIATE AGENCIES AND COMMUNICATING THE INTENTIONS OF THE PLANS WITH RESPECT TO DUTIES OF THE LEOS. THE ENGINEER SHALL HAVE FINAL CONTROL OVER THE LEOS' DUTIES AND PLACEMENT, AND WILL RESOLVE ANY ISSUES THAT MAY ARISE BETWEEN THE TWO PARTIES.

ENSURE PROVIDED LEOS HAVE BEEN TRAINED APPROPRIATE TO THE JOB DECISIONS THEY ARE REQUIRED TO MAKE WHILE ON THE PROJECT, IN ACCORDANCE WITH C&MS 614.03.

THE LEO SHALL REPORT IN TO THE CONTRACTOR PRIOR TO THE START OF THE SHIFT, IN ORDER TO RECEIVE INSTRUCTIONS REGARDING SPECIFIC WORK ASSIGNMENTS DURING HIS/HER SHIFT. THE LEO IS EXPECTED TO STAY AT THE PROJECT SITE FOR THE ENTIRE DURATION OF HIS/HER SHIFT. THE LEO SHALL REPORT TO THE CONTRACTOR AT THE END OF HIS/HER SHIFT. SHOULD IT BE NECESSARY TO LEAVE THE PROJECT SITE, THE LEO SHALL NOTIFY THE ENGINEER. THE CONTRACTOR SHALL PROVIDE THE LEO WITH A TWO-WAY COMMUNICATION DEVICE WHICH SHALL BE RETURNED TO THE CONTRACTOR AT THE END OF HIS/HER SHIFT.

LEOS (WITH PATROL CAR) REQUIRED BY THE TRAFFIC MAINTENANCE TASKS ABOVE SHALL BE PAID FOR ON A UNIT PRICE (HOURLY) BASIS UNDER ITEM 614, LAW ENFORCEMENT OFFICER (WITH PATROL CAR) FOR ASSISTANCE. THE FOLLOWING ESTIMATED QUANTITIES HAVE BEEN CARRIED TO THE GENERAL SUMMARY.

ITEM 614, LAW ENFORCEMENT OFFICER WITH PATROL CAR FOR ASSISTANCE 4624 HOURS

THE HOURS PAID SHALL INCLUDE ANY MINIMUM SHOW-UP TIME REQUIRED BY THE LAW ENFORCEMENT AGENCY INVOLVED.

ANY ADDITIONAL COSTS (ADMINISTRATIVE OR OTHERWISE) INCURRED BY THE CONTRACTOR TO OBTAIN THE SERVICES OF AN LEO ARE INCLUDED WITH THE BID UNIT PRICE FOR ITEM 614, LAW ENFORCEMENT OFFICER WITH PATROL CAR FOR ASSISTANCE.

CALCULATED XXM CHECKED XMX

MAINTENANCE OF TRAFFIC - GENERAL NOTES

FRA-70-14.54

ms consultants, inc.

PLOT.CEL
ms consultants, inc.
msconsultants.com
www.msconsultants.com
Ohio DOT Workspace
70\71 East Interchange 2E
1"
0.5"
0
Batchplot Spec: \\msconsultants.com\files\production\03\60\06634_2E\standards\plotdrv\batchplt.spc
Pen Table: N:\03\60\06634_2E\standards\tables\V8i_ms_std_06634_2D_Plan View_NoClouds.tbl
Plot Driver: \\msconsultants.com\files\Standards\ustn\ohdot\v8i\ms\plotting\PDF.pltcfg
Model: Sheet @ 3:49:15 PM View: FENCE_VIEW1
Printed: 1/16/2019 By: awhite
File: \\msconsultants.com\files\Production\03\60\06634_2E\mot\sheets\105322MN0009.dgn
34" x 22"

ITEM 614 - MAINTAINING TRAFFIC, MISC: LAW ENFORCEMENT OFFICER (LEO) WITHOUT PATROL CAR, AS PER PLAN

IN ADDITION TO THE REQUIREMENTS HEREIN, AND THE LATEST EDITION OF THE OHIO MANUAL OF UNIFORM TRAFFIC CONTROL DEVICES, A UNIFORMED LAW ENFORCEMENT OFFICER (LEO) SHALL BE PROVIDED FOR CONTROLLING TRAFFIC UNDER THE FOLLOWING CONDITIONS:

-WORK WITHIN A SIGNALIZED INTERSECTION, DEFINED AS THE AREA BOUNDED BY THE REAR X-WALK LINES
-WHEN FLAGGING WITHIN THE INTERSECTION OF TWO ARTERIAL ROADWAYS
-WHEN SPECIFIED IN THE MAINTENANCE OF TRAFFIC PLAN OR AS WHEN DIRECTED BY THE PROJECT ENGINEER
-WHEN SHIFTING TRAFFIC LEFT OF CENTER, THROUGH A SIGNALIZED INTERSECTION, WITHOUT SHIFTING SIGNAL HEADS

A FLAGGER SHALL BE UTILIZED TO ASSIST IN CONTROLLING TRAFFIC WHILE EQUIPMENT IS ENTERING OR EXITING AN INTERSECTION OR WORK ZONE. THE CONTRACTOR MAY UTILIZE HIS OWN FLAGGER OR LEO UNDER PAY ITEM 614 MAINTAINING TRAFFIC, LUMP SUM.

FLAGGERS AND LEO'S SHALL BE EQUIPPED ACCORDING TO THE STANDARDS FOR FLAGGING TRAFFIC CONTAINED IN THE OMUTCD. FLAGGING OPERATIONS PERFORMED BY LEO'S OR DESIGNATED FLAGGERS SHALL ONLY BE PERMITTED AS LONG AS ALL TRAFFIC CONTROL IS IN PLACE ACCORDING TO FIGURE 6H-10 (TA-10) IN THE OHIO MANUAL. PATROL CARS SHALL NOT BE USED IN FLAGGING OPERATIONS.

IF THE CONTRACTOR WISHES TO UTILIZE LEO'S WITH OR WITHOUT PATROL CARS FOR TRAFFIC CONTROL OTHER THAN FOR THAT REQUIRED IN THE PLANS, THEY MAY DO SO AT THEIR OWN EXPENSE. THE CONTRACTOR SHALL MAKE ARRANGEMENT THROUGH THE COLUMBUS POLICE DIVISION AT (614) 645-4795.

LEO'S SHALL BE CONSIDERED TO BE EMPLOYED BY THE CONTRACTOR AND THE CONTRACTOR SHALL BE RESPONSIBLE FOR THEIR ACTIONS. ALTHOUGH EMPLOYED BY THE CONTRACTOR, THE CITY REPRESENTATIVE SHALL HAVE CONTROL OVER THEIR PLACEMENT. LEO'S SHALL NOT HAVE THE AUTHORITY TO CHANGE, EDIT OR MODIFY ANY MAINTENANCE OF TRAFFIC SCHEME WITHOUT THE PERMISSION OF THE TEMPORARY TRAFFIC CONTROL COORDINATOR OR PROJECT ENGINEER UNLESS AN EMERGENCY DEVELOPS.

IF A SAFETY HAZARD DEVELOPS, A LEO MAY BE ASSIGNED BY THE COLUMBUS SAFETY AND SERVICE DIRECTOR AT THE CONTRACTOR'S EXPENSE.

THE FOLLOWING QUANTITIES HAVE BEEN CARRIED TO THE GENERAL SUMMARY TO BE USED AS DIRECTED BY THE ENGINEER OR AN ACCEPTABLE REPRESENTATIVE FOR THE CITY OF COLUMBUS. THE CONTRACTOR SHALL BE PAID FOR THIS BID ITEM ONLY IF DIRECTED BY THE ENGINEER.

ITEM 614 - MAINTAINING TRAFFIC, MISC.: LAW ENFORCEMENT OFFICER (LEO) WITHOUT PATROL CAR, AS PER PLAN 1768 HOURS

ITEM 614 - WORK ZONE RAISED PAVEMENT MARKER, AS PER PLAN

WORK ZONE RAISED PAVEMENT MARKERS, AS PER PLAN, AND THEIR INSTALLATION SHALL CONFORM TO CMS 614 OR C&MS 621 AS SPECIFIED HEREIN.

- RAISED PAVEMENT MARKERS IN USE DURING THE SNOW-PLOWING SEASON SHALL CONFORM TO 621.
- RAISED PAVEMENT MARKERS IN USE DURING THE NON-SNOW-PLOW SEASON SHALL CONFORM TO EITHER 614 OR 621.

THE SNOW-PLOWING SEASON SHALL RUN FROM OCTOBER 15 THROUGH APRIL 1.

IF PROJECT DELAYS, NOT THE FAULT OF ODOT, CAUSE THE WORK TO EXTEND INTO THE SNOW-PLOWING SEASON, THE CONTRACTOR SHALL BE RESPONSIBLE FOR REPLACING WORK ZONE RAISED PAVEMENT MARKERS (WZRPMS) CONFORMING TO C&MS 614, WITH RAISED PAVEMENT MARKERS CONFORMING TO 621, AS DETERMINED BY THE ENGINEER, AT THE CONTRACTOR'S EXPENSE.

THIS ITEM SHALL INCLUDE PURCHASE, INSTALLATION AND REMOVAL OF ITEM 614 WORK ZONE RAISED PAVEMENT MARKER, AS PER PLAN, INCLUDING FILLING ANY DEPRESSIONS CREATED IN THE PAVEMENT AS PER C&MS 621.08.

RESURFACING OF THE TRANSITION AREAS SHALL BE PERFORMED AT THE TIME THAT THE SURFACE COURSE IS BEING APPLIED TO THE ENTIRE PROJECT. PRIOR TO APPLICATION OF THE SURFACE COURSE ON THE PROJECT, THE EXISTING PAVEMENT WITHIN THE TRANSITION AREA SHALL BE REMOVED TO A DEPTH NECESSARY TO REACH THE LEVEL OF THE INTERMEDIATE COURSE OF THE PAVEMENT, AS DETERMINED BY THE ENGINEER.

ESTIMATED QUANTITIES FOR THE FOLLOWING HAVE BEEN PROVIDED IN THE MAINTENANCE OF TRAFFIC SUBSUMMARY:

ITEM 614 - WORK ZONE RAISED PAVEMENT MARKER, AS PER PLAN

ESTIMATED QUANTITIES FOR THE FOLLOWING HAVE BEEN CARRIED TO THE GENERAL SUMMARY:

ITEM 254 - PAVEMENT PLANING, ASPHALT CONCRETE: 24,313 SY

ITEM 442 - ASPHALT CONCRETE SURFACE COURSE, 12.5 mm, TYPE A: 1013 CY

ITEM 614 - WORK ZONE RAISED PAVEMENT MARKERS ON CONCRETE SURFACES

RAISED PAVEMENT MARKERS IN WORK ZONES, INSTALLED ON TO CONCRETE SURFACES, SHALL BE ITEM 614 WORK ZONE RAISED PAVEMENT MARKERS. WZRPMS ARE INTENDED FOR USE ONLY DURING THE NON-SNOW-PLOWING SEASON. WZRPMS SHALL NOT BE PROVIDED DURING THE SNOW-PLOWING SEASON.

THE SNOW-PLOWING SEASON SHALL RUN FROM OCTOBER 15 THROUGH APRIL 1.

WHERE A TEMPORARY ALIGNMENT WILL REMAIN IN USE THROUGH THE WINTER, THE WZRPMS SHALL BE REMOVED PRIOR TO THE BEGINNING OF THE SNOW-PLOWING SEASON AND REPLACED APPROXIMATELY APRIL 1, OR AS OTHERWISE DETERMINED BY THE ENGINEER.

THIS ITEM SHALL INCLUDE PURCHASE, INSTALLATION AND REMOVAL OF ITEM 614 WORK ZONE RAISED PAVEMENT MARKERS.

AN ESTIMATED QUANTITY OF 600 EACH OF ITEM 614 WORK ZONE RAISED PAVEMENT MARKER HAS BEEN PROVIDED AND CARRIED TO THE GENERAL SUMMARY.

ITEM 614 - WORK ZONE PAVEMENT MARKING

THE FOLLOWING ITEMS SHALL COMPLY WITH ITEM 614 EXCEPT FOR THE PAVEMENT MARKING WIDTHS SHALL BE AS FOLLOWS:

FOR USE ON FREEWAYS/RAMPS:

ALL WORK ZONE PAVEMENT MARKINGS ON FREEWAYS/RAMPS IN PHASE 1 SHALL BE SPRAY THERMOPLASTIC AS PER 740.10.

ITEM 614 - WORK ZONE PAVEMENT MARKING MISC.: LANE LINE, 6"
ITEM 614 - WORK ZONE PAVEMENT MARKING MISC.: EDGE LINE, 6"
ITEM 614 - WORK ZONE PAVEMENT MARKING MISC.: LANE LINE, 6"
ITEM 614 - WORK ZONE PAVEMENT MARKING MISC.: CHANNELIZING LINE, 12"
ITEM 614 - WORK ZONE PAVEMENT MARKING MISC.: DOTTED LINE, 6"
ITEM 614 - WORK ZONE PAVEMENT MARKING MISC.: TRANSVERSE LINE, 24"

FOR USE ON CITY STREETS:
ITEM 614 - WORK ZONE PAVEMENT MARKING MISC.: LANE LINE, 5"
ITEM 614 - WORK ZONE PAVEMENT MARKING MISC.: EDGE LINE, 5"
ITEM 614 - WORK ZONE PAVEMENT MARKING MISC.: CENTER LINE, SOLID DOUBLE, 5"
ITEM 614 - WORK ZONE PAVEMENT MARKING MISC.: CHANNELIZING LINE, 10"
ITEM 614 - WORK ZONE PAVEMENT MARKING MISC.: DOTTED LINE, 5"
ITEM 614 - WORK ZONE PAVEMENT MARKING MISC.: STOP LINE, 20"

ITEM 614 - WORK ZONE PAVEMENT MARKINGS, CLASS II

THE FOLLOWING QUANTITIES HAVE BEEN PROVIDED FOR PLACEMENT OF WORK ZONE PAVEMENT MARKINGS ON ALL ROADWAYS THAT HAVE BEEN PAVED WITH THEIR FINAL SURFACE COURSE AND DO NOT YET HAVE FINAL PAVEMENT MARKINGS INSTALLED. THESE WORK ZONE PAVEMENT MARKINGS SHALL BE INSTALLED AT THE LOCATION AND BE OF THE TYPE SHOWN IN THE FINAL TRAFFIC CONTROL PLAN.

THE FOLLOWING ESTIMATED QUANTITIES HAVE BEEN PROVIDED IN THE GENERAL SUMMARY:

ITEM 614 - WORK ZONE LANE LINE, CLASS II - 12.6 MI

ITEM 614 - TRAFFIC INCIDENT MANAGEMENT (TIM) DURING MOT

OHIO TIM IS OHIO'S TRAFFIC INCIDENT MANAGEMENT PROGRAM WHICH IS COMMITTED TO MAINTAINING THE SAFE AND EFFECTIVE FLOW OF TRAFFIC DURING EMERGENCIES AS TO PREVENT FURTHER DAMAGE, INJURY OR UNDUE DELAY OF THE MOTORING PUBLIC. IN ADDITION TO COMPLYING WITH THE PROVISION OF OMUTCD CHAPTER 6I, CONTROL OF TRAFFIC THROUGH TRAFFIC INCIDENT MANAGEMENT AREAS, THE CONTRACTOR SHALL ACTIVELY PARTICIPATE IN TIM PLANNING AND IMPLEMENTATION AS OUTLINED BELOW.

1. SUPERINTENDENT SHALL IDENTIFY THE INDIVIDUAL PERSONS ON THE PROJECT WHO WILL, OR MAY NEED TO, PERFORM THE DUTIES HEREIN. AT A MINIMUM, INCLUDE THE SUPERINTENDENT, FOREMEN AND SUPERVISORS (OR EQUIVALENT) AS WELL AS THE WORKSITE TRAFFIC SUPERVISOR (WTS; IF APPLICABLE TO THE PROJECT). THESE INDIVIDUALLY IDENTIFIED PERSONS SHALL COLLECTIVELY BE KNOWN AS CONTRACTOR TRAFFIC INCIDENT MANAGEMENT (TIM) CONTACTS. NOTIFY THE PROJECT ENGINEER OF THE CONTRACTOR TIM CONTACTS (ALONG WITH CONTACT INFORMATION FOR EACH) AT OR BEFORE THE PRECONSTRUCTION MEETING.

2. SUPERINTENDENT SHALL NOTIFY THE ENGINEER IMMEDIATELY IF ANY CONTRACTOR TIM CONTACT IS ADDED, REMOVED OR THE CONTACT INFORMATION CHANGES OVER THE COURSE OF THE PROJECT.

3. PRIOR THE FIRST DAY OF WORK IN THE FIELD, EACH CONTRACTOR TIM CONTACT ON THE PROJECT SHALL HAVE ATTENDED AND SUCCESSFULLY COMPLETED OHIO TIM TRAINING PROVIDED BY THE DEPARTMENT OR DESIGNEE. TRAINING INFORMATION CAN BE FOUND AT WWW.OHIOTIM.COM.

4. SUPERINTENDENT, AT A MINIMUM, SHALL ATTEND AND ACTIVELY PARTICIPATE IN A DEPARTMENT SCHEDULED TIM MEETING BEFORE CONSTRUCTION WORK BEGINS AND BEFORE EACH PHASE CHANGE. THESE MEETINGS WILL RESULT IN A DEPARTMENT ISSUED PROJECT SPECIFIC TRAFFIC INCIDENT MANAGEMENT PLAN (TIMP). AT THE TIM MEETINGS THE ATTENDING CONTRACTOR TIM CONTACTS SHALL:

A. COLLABORATE WITH ODOT AND SAFETY FORCES;

B. SHARE PROJECT SPECIFIC DETAILS THAT IMPACT TIM RESPONDERS; AND

C. RECOMMEND WAYS TO INCORPORATE NECESSARY EMERGENCY ACCESS AND OTHER TIM ELEMENTS FOR TIM RESPONDERS GIVEN PROJECT SPECIFIC WORK BEING COMPLETED AND PROJECT SPECIFIC PHASING.

5. CONTRACTOR TIM CONTACTS SHALL IMPLEMENT COMPONENTS OF THE RESULTING TIMP (SUCH AS APPROVED EMERGENCY INGRESS/EGRESS POINTS, ETC), AS DIRECTED BY THE ENGINEER IN ACCORDANCE WITH 109.05.

6. CONTRACTOR TIM CONTACTS SHALL PERFORM, AT A MINIMUM, THE FOLLOWING FUNCTIONS WHEN AN INCIDENT/CRASH OCCURS:

A. IF OBSERVED OR PRESENT WHEN OCCURS, CALL 911 AND THEN NOTIFY THE TRAFFIC MANAGEMENT CENTER (TMC) TO PROVIDE THE FOLLOWING:

I. LOCATION, INCLUDING MILEPOST NUMBER AND DIRECTION OF TRAVEL
II. NUMBER AND TYPE OF VEHICLES INVOLVED, IF KNOWN
III. ESTIMATED EXTENT OF DAMAGE OR INJURY, IF KNOWN
IV. ESTIMATED NUMBER OF PATIENTS INVOLVED, IF KNOWN
V. ANY POTENTIAL HAZARDOUS CONDITIONS, IF KNOWN
VI. THE PLACARD NUMBER ON ANY HAZARDOUS MATERIALS PLACARD FROM A SAFE DISTANCE, IF APPLICABLE AND VISIBLE

B. FOLLOWING AN INCIDENT/CRASH:

I. INITIATE TRAFFIC MANAGEMENT/PROVIDE TEMPORARY TRAFFIC CONTROL AS INDICATED IN THE TIMP, AS DIRECTED BY THE ENGINEER IN ACCORDANCE WITH 109.05.
II. RECOMMEND ROADWAY REPAIR NEEDS.
III. PROVIDE REPAIR RESOURCES AND INITIATE REPAIRS, AS DIRECTED BY THE ENGINEER IN ACCORDANCE WITH 109.05.
IV. ATTEND AND PARTICIPATE IN AN AFTER ACTION REVIEW (AAR).

ALL COSTS, UNLESS OTHERWISE SPECIFIED, RESULTING FROM THE ABOVE REQUIREMENTS SHALL BE CONSIDERED TO BE INCLUDED IN THE LUMP SUM PRICE FOR ITEM 614, MAINTAINING TRAFFIC. FAILURE TO PERFORM THE REQUIREMENTS OF THIS PLAN NOTE WILL RESULT IN A DAILY FINE OF 2% OF ITEM 614, MAINTAINING TRAFFIC AND MAY RESULT IN ONE OR MORE CONTRACTOR TIM CONTACTS BEING REMOVED FROM THE LIST OF OHIO TIM TRAINED INDIVIDUALS (AT THE SOLE DISCRETION OF THE OHIO TIM EXECUTIVE COMMITTEE). IN THE EVENT AN INDIVIDUAL IS REMOVED FROM THE OHIO TIM TRAINED LIST, THE INDIVIDUAL WILL BE REMOVED FROM CONTRACTOR TIM CONTACT RESPONSIBILITIES ON ALL PROJECTS.

CALCULATED JAH CHECKED JML

MAINTENANCE OF TRAFFIC - GENERAL NOTES

FRA-70-14.54

ms consultants, inc.

ITEM 616 - DUST CONTROL

THE CONTRACTOR SHALL FURNISH AND APPLY WATER FOR DUST CONTROL AS DIRECTED BY THE ENGINEER. THE FOLLOWING ESTIMATED QUANTITIES HAVE BEEN INCLUDED FOR DUST CONTROL PURPOSES:

ITEM 616, WATER 4000 M. GAL.

ITEM 614 - LONGITUDINAL CHANNELIZER

LONGITUDINAL CHANNELIZERS SHALL BE PROVIDED AS CALLED FOR IN THE PLANS. A LONGITUDINAL CHANNELIZER CONSISTS OF A COMBINATION OF VERTICAL COMPONENTS AND LONGITUDINAL BASE COMPONENTS, FIT TOGETHER TO CREATE A CONTINUOUS CHANNELIZING DEVICE, AS DETAILED IN TRAFFIC PIS 2010180. USE OF TUBULAR MARKERS, AS IDENTIFIED IN THE OMUTCD, FIGURE 6F-7, SHALL NOT QUALIFY FOR USE AS A LONGITUDINAL CHANNELIZER.

THE VERTICAL COMPONENT SHALL BE EQUIPPED WITH TWO 3-INCH WIDE RETROREFLECTIVE BANDS, PLACED A MAXIMUM OF 2 INCHES FROM THE TOP, WITH A MAXIMUM OF 6 INCHES BETWEEN THE BANDS. THE LONGITUDINAL BASE COMPONENTS SHALL BE EQUIPPED WITH REFLECTORS.

LONGITUDINAL CHANNELIZERS SHALL COMPLY WITH THE REQUIREMENTS CONTAINED WITHIN TRAFFIC PIS 2010180.

FURNISH LONGITUDINAL CHANNELIZERS FROM THE APPROVED LIST FOUND ON THE OFFICE OF MATERIALS MANAGEMENT WEBSITE. FOR INSTALLATION PROCEDURES, FOLLOW THE MANUFACTURER'S INSTRUCTIONS.

LONGITUDINAL CHANNELIZERS SHALL BE MONITORED TO DETERMINE WHETHER THERE IS SIGNIFICANT DAMAGE FROM ERRANT VEHICLES.

PAYMENT FOR PROVIDING, INSTALLING, MAINTAINING AND REMOVING LONGITUDINAL CHANNELIZERS WILL BE MADE AT THE UNIT PRICE PER FOOT. AN ESTIMATED QUANTITY OF ITEM 614 LONGITUDINAL CHANNELIZER HAS BEEN PROVIDED AND CARRIED TO THE GENERAL SUMMARY.

ITEM 614 - MAINTAINING TRAFFIC, MISC.: REMOVAL OF RUMBLE STRIPS

THE CONTRACTOR SHALL MILL 2 INCHES BY 2 FEET WIDE OF THE EXISTING ASPHALT SHOULDER IN ORDER TO REMOVE THE EXISTING RUMBLE STRIPS ALONG I-70 WB AND I-71 SB IN THE AREA WHERE TRAFFIC IS SHIFTED. THE CONTRACTOR SHALL THEN COAT ALL MILLED SURFACES HORIZONTAL AND VERTICAL WITH APPROVED AC LIQUID. NEXT THE CONTRACTOR SHALL PLACE 2 INCHES OF ITEM 448 ASPHALT CONCRETE SURFACE COURSE, TYPE 1, PG 64-28.

ALL COST ASSOCIATED WITH THE REMOVAL OF THE EXISTING PAVEMENT AND PLACEMENT OF THE SURFACE COURSE SHALL BE INCLUDED IN UNIT PRICE BID PER FOOT OF ITEM 614 - MAINTAINING TRAFFIC, MISC: REMOVAL OF RUMBLE STRIPS.

AN ESTIMATED QUANTITY OF 11850 FEET HAS BEEN CARRIED TO THE GENERAL SUMMARY.

ITEM 615 - PAVEMENT FOR MAINTAINING TRAFFIC, CLASS A, AS PER PLAN

THIS ITEM SHALL BE AS PER CMS 615 EXCEPT THE PAVEMENT THICKNESS AND COURSE MAKE-UP SHALL BE AS SPECIFIED IN THE LEGEND OF THE TYPICAL SECTIONS FOR TEMPORARY ROADWAY TR-1B (TEMP I-71 SB TO I-70 WB) AND TR-1D (TEMP I-70 WB TO I-71 NB).

EARTHWORK FOR MAINTAINING TRAFFIC

THE FOLLOWING QUANTITIES HAVE BEEN INCLUDED IN THE PLAN FOR INFORMATION ONLY.

EXCAVATION FOR MAINTAINING TRAFFIC 14929 CU YD.

EMBANKMENT FOR MAINTAINING TRAFFIC 2638 CU YD.

WHEN UNDERCUTS ARE NECESSARY FOR MAINLINE PAVEMENT OR EMBANKMENT CONSTRUCTION, EVALUATE THE NEED FOR TEMPORARY ROAD UNDERCUTS IF WITHIN A CLOSE PROXIMITY TO THE MAINLINE UNDERCUTS. A GEOTECHNICAL EVALUATION SHOULD BE CONSIDERED TO DETERMINE IF THE EXISTING SOIL CONDITIONS ARE ADEQUATE TO SUPPORT THE TEMPORARY ROAD. ADDITIONAL SOIL BORINGS ALONG THE TEMPORARY ROAD ARE NOT NORMALLY REQUIRED.

INCENTIVE/DISINCENTIVE CONTRACT

THE CONTRACTOR SHALL COMPLETE ALL CRITICAL WORK AND SAFETY ITEMS ACCORDING TO THE INCENTIVE/ DISINCENTIVE CONTRACT TABLE. THE INCENTIVE/DISINCENTIVE CONTRACT TABLE IS LOCATED IN THE PLAN GENERAL NOTES. IN THE EVENT THE CONTRACTOR IMPEDES THE FLOW OF TRAFFIC SUBSEQUENT TO THE OPENING TO UNRESTRICTED TRAFFIC, THE CONTRACTOR SHALL BE ASSESSED A DISINCENTIVE ACCORDING TO THE INCENTIVE/ DISINCENTIVE CONTRACT TABLE.

CRITICAL WORK IS SHOWN IN THE INCENTIVE/ DISINCENTIVE CONTRACT TABLE.

CRITICAL WORK IS DEFINED AS HAVING THE DESIGNATED SECTION OF WORK OPEN TO UNRESTRICTED TRAFFIC AS SHOWN IN THE TABLE, OR THE ENTIRE PROJECT IF NOT OTHERWISE LISTED.

UNRESTRICTED TRAFFIC IS DEFINED AS ALL TRAFFIC LANES BEING AVAILABLE FOR USE AT THEIR FINAL DESIGN WIDTH WITH ALL MARKINGS, RPMS, AND SAFETY FEATURES INSTALLED, ALONG WITH NO RESTRICTIONS WITHIN 2 FEET OF THE EDGE LINE ON THE SHOULDERS.

INCENTIVE/DISINCENTIVE AMOUNT:

THE CONTRACTOR WILL BE PAID AN INCENTIVE OR WILL BE ASSESSED A DISINCENTIVE ACCORDING TO THE INCENTIVE/ DISINCENTIVE CONTRACT TABLE.

EXTENSIONS OF TIME WILL BE FOR CALENDAR DAYS AND CALCULATED IN ACCORDANCE WITH C&MS 108.06 EXCEPT AS FOLLOWS: NO EXTENSIONS OF TIME WILL BE GRANTED FOR DELAYS IN MATERIAL DELIVERIES (UNLESS SUCH DELAYS ARE INDUSTRY WIDE), AND LABOR STRIKES (UNLESS SUCH STRIKES ARE AREA WIDE).

ITEM 622, PORTABLE CONCRETE BARRIER, 50", AS PER PLAN

THIS WORK SHALL CONSIST OF FURNISHING, MAINTAINING, AND SUBSEQUENTLY REMOVING A 50-INCH PORTABLE BARRIER (PB) AT THE LOCATIONS SHOWN ON THE PLANS.
PORTABLE BARRIER, 32 INCHES HIGH WITH AN 18-INCH MINIMUM HEIGHT GLARE SCREEN MAY BE USED AT THE OPTION OF THE CONTRACTOR. THE GLARE SCREEN SHALL BE CONSTRUCTED USING ONE OF THE SCREENS PROVIDED ON THE APPROVED LIST, AVAILABLE ON THE OFFICE OF ROADWAY ENGINEERING WEBSITE.

PADDLE OR INTERMITTENT TYPE GLARE SCREENS SHALL BE DESIGNED USING A 20 DEGREE CUT-OFF ANGLE BASED ON TANGENT ALIGNMENT. THAT SPACING SHALL BE USED THROUGHOUT THE BARRIER LENGTH WITHOUT REGARD TO BARRIER CURVATURE.

THE GLARE SCREEN SYSTEM SHALL BE SECURELY FASTENED TO THE 32-INCH PORTABLE CONCRETE BARRIER USING THE HARDWARE AND PROCEDURES SPECIFIED BY THE MANUFACTURER.

FOR DIRECTIONS ON HOW TO INSTALL THE GLARE SCREEN AND THE BARRIER, SEE THE MANUFACTURER'S INSTRUCTIONS.

PAYMENT SHALL INCLUDE ALL LABOR, MATERIAL, AND EQUIPMENT NECESSARY TO PERFORM THE WORK AND SHALL BE PAID FOR AT THE CONTRACT PRICE PER FOOT FOR ITEM 622, PORTABLE CONCRETE BARRIER, 50 INCH, AS PER PLAN.

APPROVED MAINTENANCE OF TRAFFIC (MOT) POLICY EXCEPTIONS

PORTIONS OF THE MOT PLANS AS DESCRIBED BELOW HAVE BEEN APPROVED BY THE MOT EXCEPTION COMMITTEE (MOTEC) OR THE PROJECT IMPACT ADVISORY COUNCIL (PIAC) PER TRAFFIC MANAGEMENT IN WORK ZONES POLICY (21-008(P)) AND STANDARD PROCEDURE (123-001(SP)).

APPROVED MOT EXCEPTIONS INCLUDE:

- I-70 WESTBOUND RAMP TO I-71 NORTHBOUND OFF-PEAK LANE CLOSURES (APPROVED 11/9/2017)
- I-71 SOUTHBOUND RAMP TO I-70 EASTBOUND OFF-PEAK LANE CLOSURES (APPROVED 11/9/2017)

A MAINTENANCE OF TRAFFIC MEETING SHALL BE HELD A MINIMUM OF 30 CALENDAR DAYS PRIOR TO IMPLEMENTATION OF EACH APPROVED MOT EXCEPTION. THIS MEETING SHALL INCLUDE THE DISTRICT WORK ZONE TRAFFIC MANAGER AND THE TEMPORARY CONTROL COORDINATOR FROM THE CITY OF COLUMBUS AS WELL AS THE CONTRACTOR. WORKSITE TRAFFIC SUPERVISOR (WTS) AND ANY SUBCONTACTORS INVOLVED WITH TEMPORARY TRAFFIC CONTROL.

IN ADDITION TO ANY NOTIFICATIONS REQUIRED IN OTHER NOTES, THE CONTRACTOR SHALL NOTIFY THE PROJECT ENGINEER AT LEAST 3 BUSINESS DAYS IN ADVANCE OF IMPLEMENTATION OF THE APPROVED MOT EXCEPTIONS REFERENCED ABOVE SO THAT THE PROJECT ENGINEER CAN SEND EMAIL NOTIFICATION TO THE OFFICE OF ROADWAY ENGINEERING, STATEWIDE TMC, DWZTM AND SPECIAL HAULING PERMITS AT LEAST 2 BUSINESS DAYS IN ADVANCE OF THE IMPLEMENTATION OF THE APPROVED MOT EXCEPTIONS REFERENCED ABOVE. REFERENCE "I-70 WB RAMP TO I-71 NORTHBOUND EXCEPTION REQUEST APPROVAL DATED 11/9/2017 FOR PID 105322" AND "I-71 SOUTHBOUND RAMP TO I-70 EASTBOUND EXCEPTION REQUEST APPROVAL DATED 11/9/2017 FOR PID 105322" IN THE NOTIFICATION AND OTHER CORRESPONDENCE.

ANY CHANGES TO THE MOT THAT IMPACT THE PREVIOUSLY APPROVED MOT EXCEPTION(S) LISTED ABOVE SHALL BE APPROVED IN WRITING BY THE APPLICABLE ODOT CENTRAL OFFICE COMMITTEE (MOTEC OR PIAC). IN THE EVENT THAT SUCH CHANGES ARE PROPOSED, THE REQUEST SHALL BE COORDINATED THROUGH THE DISTRICT WORK ZONE TRAFFIC MANAGER (DWZTM) A MINIMUM OF 30 CALENDER DAYS PRIOR TO THE DESIRED IMPLEMENTATION DATE. IF THE DISTRICT AGREES WITH THE PROPOSED CHANGES THE DWZTM SHALL SEEK APPROVAL FROM THE APPLICABLE ODOT CENTRAL OFFICE COMMITTEE. IN THE EVENT THE PROPOSED CHANGES ARE APPROVED IN WRITING, THE CLOSURES ARE STILL SUBJECT TO NOTIFICATION REQUIREMENTS WITHIN THIS NOTE PRIOR TO IMPLEMENTATION.

PLOT.CEL
ms consultants, inc.
msconsultants.com
www.msconsultants.com
Ohio DOT Workspace
70\71 East Interchange 2E
34" x 22"
Model: Sheet
Printed: 2/26/2019 @ 5:10:11 PM
View: FENCE_VIEW1
By: hbrendlinger
File: \\msconsultants.com\files\Production\03\60\06634_2E\mot\sheets\105322MN0010.dgn
ms consultants, inc.

PLOT.CEL
ms consultants, inc.
msconsultants.com
www.msconsultants.com
Ohio DOT Workspace
70\71 East Interchange 2E
0 0.5" 1"
Batchplot Spec: \\msconsultants.com\files\production\03\60\06634_2E\standards\plotdrv\batchplt.spec
Pen Table: \\msconsultants.com\files\Standards\astm\ohdot\V8i\ms\plotting\pen\V8i_ms_std.tbl
Plot Driver: \\msconsultants.com\files\Standards\astm\ohdot\v8i\ms\plotting\PDF.pltcfg
PDF: ohdotV8i
PCF: 60-06634_2E_Columbus
34" x 22"
View: FENCE_VIEW1
By: kryan
Model: Sheet
Printed: 9/28/2018 @ 10:05:51 AM
File: N:\03\60\06634_2E\mat\sheets\105228MN012.dgn

ITEM 614 - WORKSITE TRAFFIC SUPERVISOR

SUBJECT TO APPROVAL OF THE ENGINEER, THE CONTRACTOR SHALL EMPLOY AND IDENTIFY (SOMEONE OTHER THAN THE SUPERINTENDENT) A PREQUALIFIED WORKSITE TRAFFIC SUPERVISOR (WTS) BEFORE STARTING WORK IN THE FIELD. THE WTS SHALL BE TRAINED IN ACCORDANCE WITH CMS 614.03, SHALL HAVE SUCCESSFULLY COMPLETED ODOT ADMINISTERED WTS TESTING (AND RE-TESTING WHEN APPLICABLE) AND BE LISTED ON THE ODOT PREQUALIFIED WTS ROSTER. PREQUALIFICATION EXPIRES EVERY 5 YEARS. RE-TESTING SHALL BE SUCCESSFULLY REPEATED EVERY 5 YEARS TO REMAIN PREQUALIFIED.

THE NAME OF THE PREQUALIFIED WTS AND RELATED 24-HOUR CONTACT INFORMATION SHALL BE PROVIDED TO THE ENGINEER AT THE PRECONSTRUCTION CONFERENCE. IF THE DESIGNATED WTS WILL NOT BE AVAILABLE FULL TIME (24/7), THE CONTRACTOR MAY DESIGNATE AN ALTERNATE (SECONDARY) WTS TO BE AVAILABLE WHEN THE PRIMARY IS OFF DUTY; HOWEVER THE PRIMARY WTS SHALL REMAIN THE POINT OF CONTACT AT ALL TIMES. ANY ALTERNATE (SECONDARY) WTS IS SUBJECT TO THE SAME TRAINING, PREQUALIFICATION AND OTHER REQUIREMENTS OUTLINED WITHIN THIS PLAN NOTE. AT ALL TIMES THE ENGINEER, OR ENGINEER'S REPRESENTATIVES, MUST BE INFORMED OF WHO THE PRIMARY WTS (AND SECONDARY WTS, IF APPLICABLE) IS AT THE CURRENT TIME.

TIMES. ANY ALTERNATE (SECONDARY) WTS IS SUBJECT TO THE SAME TRAINING, PREQUALIFICATION AND OTHER REQUIREMENTS OUTLINED WITHIN THIS PLAN NOTE. AT ALL TIMES THE ENGINEER, OR ENGINEER'S REPRESENTATIVES, MUST BE INFORMED OF WHO THE PRIMARY WTS (AND SECONDARY WTS, IF APPLICABLE) IS AT THE CURRENT TIME.

THE WTS POSITION HAS THE PRIMARY RESPONSIBILITY OF IMPLEMENTING THE TRAFFIC MANAGEMENT PLAN (TMP), MONITORING THE SAFETY AND MOBILITY OF THE ENTIRE WORK ZONE, AND CORRECTING TEMPORARY TRAFFIC CONTROL (TTC) DEFICIENCIES FOR THE ENTIRE WORK ZONE. THE WTS, AND ALTERNATE WTS WHEN ON DUTY, SHALL HAVE SUFFICIENT AUTHORITY TO EFFECTIVELY CARRY OUT THE IDENTIFIED WTS RESPONSIBILITIES AND DUTIES. THE DUTIES OF THE WTS ARE AS FOLLOWS:

1. BE AVAILABLE ON A 24-HOUR PER DAY BASIS.

2. BE ON SITE FOR ALL EMERGENCY TTC NEEDS WITHIN ONE HOUR OF NOTIFICATION BY POLICE OR PROJECT STAFF, AND EFFECT CORRECTIVE MEASURES IMMEDIATELY ON EXISTING WORK ZONE TTC DEVICES.

3. ATTEND PRECONSTRUCTION MEETING AND ALL PROJECT MEETINGS WHERE TTC MANAGEMENT IS DISCUSSED.

4. BE AVAILABLE ON SITE FOR OTHER MEETINGS OR DISCUSSIONS WITH THE ENGINEER UPON REQUEST.

5. BE AWARE OF ALL EXISTING AND PROPOSED TTC OPERATIONS OF THE CONTRACTOR, SUBCONTRACTORS AND SUPPLIERS, AND ENSURE COORDINATION OCCURS BETWEEN THEM TO ELIMINATE CONFLICTING TEMPORARY AND/OR PERMANENT TRAFFIC CONTROL.

6. COORDINATE PROJECT ACTIVITIES WITH ALL LAW ENFORCEMENT OFFICERS (LEOS). THE WTS SHALL ALSO BE THE MAIN CONTACT PERSON WITH THE LEOS WHILE LEOS ARE ON THE PROJECT.

7. COORDINATE AND FACILITATE MEETINGS WITH ODOT PERSONNEL, LEOS AND OTHER APPLICABLE ENTITIES BEFORE EACH PLAN PHASE SWITCH TO DISCUSS THE WORK ZONE TTC FOR IMPLEMENTING THE PHASE SWITCH. SUBMIT A WRITTEN DETAIL OF MOT OPERATIONS AND SCHEDULE OF EVENTS TO IMPLEMENT THE SWITCH BETWEEN PHASE PLANS TO THE ENGINEER 5 CALENDAR DAYS PRIOR TO THIS MEETING.

8. BE PRESENT, ON SITE FOR, AND INVOLVED WITH, EACH TTC SET UP/TAKE DOWN AND EACH PHASE CHANGE IN ACCORDANCE WITH CMS 614.03.

9. ON A CONTINUAL BASIS ENSURE THAT THE TTC ZONE AND ALL RELATED DEVICES ARE INSTALLED, MAINTAINED AND REMOVED IN COMPLIANCE WITH THE CONTRACT DOCUMENTS.

10. ON A CONTINUAL BASIS FACILITATE CORRECTIVE ACTION(S) NECESSARY TO BRING DEFICIENT TTC ZONES AND ALL RELATED DEVICES INTO COMPLIANCE WITH CONTRACT DOCUMENTS IN THE TIMEFRAME DETERMINED BY THE ENGINEER.

11. INSPECT, EVALUATE, PROPOSE NECESSARY MODIFICATIONS TO, AND DOCUMENT THE EFFECTIVENESS OF, THE TTC DEVICES AND TRAFFIC OPERATIONS ON A DAILY BASIS (7 DAYS A WEEK). IN ADDITION, PERFORM ONE WEEKLY NIGHT INSPECTION OF THE WORK ZONE SETUP FOR DAYTIME WORK OPERATIONS; AND ONE DAYTIME INSPECTION PER WEEK FOR NIGHTTIME PROJECTS. THIS SHALL INCLUDE (BUT NOT BE LIMITED TO) DOCUMENTATION ON THE FOLLOWING PROJECT EVENTS:

A. INITIAL TTC SETUP (DAY AND NIGHT REVIEW).
B. DAILY TTC SETUP AND REMOVAL.
C. WHEN CONSTRUCTION STAGING CAUSES A CHANGE IN THE TTC SETUP.
D. CRASH OCCURRENCES WITHIN THE CONSTRUCTION AREA AND WITHIN THE INFLUENCE AREA(S) APPROACHING THE WORK ZONE.
E. REMOVAL OF TTC DEVICES AT THE END OF A PHASE OR PROJECT.
F. ALL OTHER EMERGENCY TTC NEEDS.

12. COMPLETE THE DEPARTMENT APPROVED LONG TERM INSPECTION FORM (CA-D-8) AFTER EACH INSPECTION AS REQUIRED IN # 11 AND SUBMIT IT TO THE ENGINEER THE FOLLOWING WORKDAY. THESE REPORTS SHALL INCLUDE A CHECKLIST OF ALL TTC MAINTENANCE ITEMS TO BE REVIEWED. A COPY OF THE FORM WILL BE PROVIDED AT THE PRE-CONSTRUCTION MEETING. ANY DEFICIENCIES OBSERVED SHALL BE NOTED, ALONG WITH RECOMMENDED OR COMPLETED CORRECTIVE ACTIONS AND THE DATES BY WHICH SUCH CORRECTIONS WERE, OR WILL BE, COMPLETED. A COPY OF THE CURRENT CA-D-8 DOCUMENT CAN BE FOUND ON THE OFFICE OF CONSTRUCTION ADMINISTRATION'S INSPECTION FORMS WEBSITE.

13. HAVE COPIES OF THE ODOT TEMPORARY TRAFFIC CONTROL MANUAL AND CONTRACT DOCUMENTS AVAILABLE AT ALL TIMES ON THE PROJECT.

THE DEPARTMENT WILL DEDUCT:

A. THE PRORATED DAILY AMOUNT OF ITEM 614 MAINTAINING TRAFFIC FOR ANY DAY IN WHICH THE WTS FAILS TO PERFORM THE DUTIES SET FORTH ABOVE. THE PRORATED DAILY AMOUNT WILL BE EQUAL TO THE ORIGINAL BID AMOUNT FOR ITEM 614 MAINTAINING TRAFFIC DIVIDED BY THE DIFFERENCE BETWEEN THE ORIGINAL COMPLETION DATE AND THE FIRST DAY OF WORK, IN CALENDAR DAYS.

B. 1% OF THE ORIGINAL BID AMOUNT FOR ITEM 614 MAINTAINING TRAFFIC FOR ANY DAY THAT A TTC ISSUE IS IDENTIFIED IN THE FIELD AND IS NOT CORRECTED IN THE GIVEN TIMEFRAME PER THE ENGINEER. DEDUCTION B SHALL NOT APPLY TO SITUATIONS COVERED BY DEDUCTION C.

C. 1% OF THE ORIGINAL BID AMOUNT FOR ITEM 614 MAINTAINING TRAFFIC FOR ANY DAY THAT A LANE OR RAMP IS BLOCKED (FULLY OR PARTIALLY) WITHOUT TTC, AS DETERMINED BY THE ENGINEER. THIS DEDUCTION SHALL BE IN addition TO ANY OTHER DISINCENTIVES ESTABLISHED FOR UNAUTHORIZED LANE USE.

FOR DAYS IN WHICH MORE THAN ONE DEDUCTION LISTED ABOVE OCCUR, THE HIGHEST DEDUCTION AMOUNT WILL APPLY.

IF THREE OR MORE TOTAL DAYS RESULT IN TTC ISSUES DESCRIBED IN DEDUCTION B OR C ABOVE, THE PRIMARY WTS SHALL BE IMMEDIATELY REMOVED FROM THE WORK IN ACCORDANCE WITH C&MS 108.05. UPON REMOVAL THE ENGINEER SHALL NOTIFY ODOT CENTRAL OFFICE (WTSPREQUALIFICATION@DOT.OHIO.GOV) TO REGISTER A REMOVAL AGAINST THE STATEWIDE PREQUALIFICATION FOR THE PRIMARY WTS. THREE REMOVALS SHALL CAUSE STATEWIDE DISQUALIFICATION FOR ANY PREVIOUSLY PREQUALIFIED WTS.

PAYMENT FOR THE ABOVE REQUIREMENTS, RESPONSIBILITIES AND DUTIES SHALL BE INCLUDED IN THE LUMP SUM PRICE BID FOR ITEM 614, MAINTAINING TRAFFIC.

ITEM 615 PAVEMENT FOR MAINTAINING TRAFFIC, CLASS B, APP, TYPE 1; ITEM 615 PAVEMENT FOR MAINTAINING TRAFFIC, CLASS B, APP, TYPE 2; ITEM 615 PAVEMENT FOR MAINTAINING TRAFFIC, CLASS B, APP, TYPE 3;

THIS ITEM SHALL BE UTILIZED FOR THE PAVEMENT REPAIRS NEEDED DURING THIS CONSTRUCTION PROCESS. ALL AREAS TO BE REPAIRED SHALL BE LOCATED BY THE ENGINEER. IT IS LIKELY THAT REPAIRS WILL BE NEEDED PRIOR TO EACH PHASE SWITCH. GREAT CARE SHALL BE TAKEN TO MAINTAIN THE EXISTING PAVEMENT CROSS SLOPE AS WELL AS ALL LONGITUDINAL SLOPES. THE TYPE OF REPAIR SHALL BE DETERMINED BY THE PROJECT ENGINEER. PAYMENT FOR ALL LABOR, EQUIPMENT AND MATERIALS REQUIRED FOR MAINTENANCE OF TRAFFIC FOR PAVEMENT REPAIRS SHALL BE INCLUDED IN THE LUMP SUM CONTRACT PRICE FOR ITEM 614, MAINTAINING TRAFFIC.

TYPE 1 IS TO BE USED WHEN YOU NEED TO MILL & FILL AN AREA OF VARYING LENGTH AND HAVE AN AVERAGE WIDTH OF NOT LESS THAN 2 FEET.

TYPE 2 IS TO BE USED FOR FIXING THE LONGITUDINAL JOINT ISSUES OF VARYING LENGTH AND HAVE A CONSISTENT WIDTH OF 2 FEET.

TYPE 3 IS TO BE USED FOR DEEPER REPAIRS (POTHOLES) OF VARYING LENGTH AND WILL HAVE AN AVERAGE WIDTH OF NOT LESS THAN 4 FEET.

TYPE 4 IS TO BE USED FOR COMPOSITE PAVEMENT REPAIRS OF VARYING LENGTH AND WILL HAVE AN AVERAGE WIDTH OF NOT LESS THAN 3 FEET.

ALL COSTS ASSOCIATED WITH REMOVING AND REPLACING PAVEMENT AND TACK COAT FOR THE REPAIRS SHALL BE INCIDENTAL TO ITEM 615 PAVEMENT FOR MAINTAINING TRAFFIC, CLASS B, AS PER PLAN.

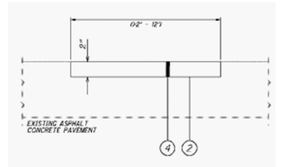

TYPE 1 DETAIL
PARTIAL DEPTH PAVEMENT REPAIR, AS PER PLAN TYPE 1

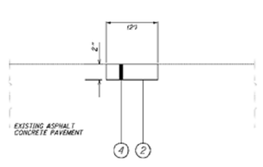

TYPE 2 DETAIL
PARTIAL DEPTH PAVEMENT REPAIR, AS PER PLAN TYPE 2

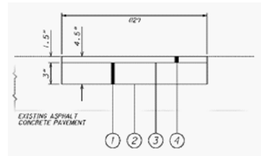

TYPE 3 DETAIL
PARTIAL DEPTH PAVEMENT REPAIR, AS PER PLAN TYPE 3

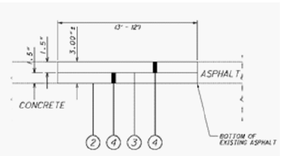

TYPE 4 DETAIL
PARTIAL DEPTH PAVEMENT REPAIR, AS PER PLAN TYPE 4

LEGEND

(1) ITEM 301 - ASPHALT CONCRETE BASE, PG64-22
(2) ITEM 407 - TACK COAT @0.075 PER SY. YD.
(3) ITEM 407 - TACK COAT FOR INTERMEDIATE @ 0.05 PER SY. YD.
(4) ITEM 441 - TYPE 1 (AS DESCRIBED IN C&MS 615.05)

ITEM 615 PAVEMENT FOR MAINTAINING TRAFFIC, CLASS B, APP, TYPE 1 = 600 S.Y.
ITEM 615 PAVEMENT FOR MAINTAINING TRAFFIC, CLASS B, APP, TYPE 2 = 8500 S.Y.
ITEM 615 PAVEMENT FOR MAINTAINING TRAFFIC, CLASS B, APP, TYPE 3 = 500 S.Y.

CALCULATED JAH CHECKED JML

MAINTENANCE OF TRAFFIC - GENERAL NOTES

FRA-70-14.54

ms consultants, inc.

PLOT.CEL
ms consultants, inc.
msconsultants.com
www.msconsultants.com
Batchplot Spec: \\msconsultants.com\files\production\03\60\06634_2E\standards\plotdir\batchplt.spc
Pen Table: \\msconsultants.com\files\Production\03\60\06634_2E\deliverables\2019-02-11 ADD\Ohio DOT Workspace\03\60\06634_2E_CLOUDS\VB_ms_std.tbl
Plot Driver: \\msconsultants.com\files\Standards\usstn\ohdot\v8\ms\plotting\PDF.pltcfg
Model: Sheet
Printed: 2/13/2019 @ 7:17:53 PM
File: \\msconsultants.com\files\Production\03\60\06634_2E\mnol\sheets\1053222NN0011.dgn
View: FENCE_VIEW1
By: harendinger
34" x 22"

TEMPORARY ROADWAYS TO BE CONSTRUCTED

TEMPORARY ROAD NAME	DESCRIPTION	PHASE IN	PHASE OUT
TR-1B	TEMP I-70 EB TO I-71 NB	1	4
TR-1D	TEMP I-70 EB	1	4
TR-1F	TEMP I-70 EB EXIT TO 18TH ST.	1	4
TR-2A	TEMP I-70 EB/WB CONNECTION	1	5
TR-2D	TEMP I-70 EB TO I-71 NB	1	4
TR-2F	TEMP I-70 EB EXIT TO 18TH ST.	2	3
TR-2G	TEMP MOOBERRY ST. CONNECTION	2	3

LANE VALUE CONTRACT TABLE

ACTIVITY	AFFECTED ROADWAY(S)	RESTRICTION TYPE	RESTRICTION TIME	DISINCENTIVE
I-70 WB MAINLINE CLOSURE	I-70 WB MAINLINE	ROAD CLOSURE	11PM TO 5AM DAILY	$530 PER MIN PER LANE
I-71 NB MAINLINE CLOSURE	I-71 NB MAINLINE	ROAD CLOSURE	11PM TO 5AM DAILY	$355 PER MIN PER LANE
I-71 SB MAINLINE CLOSURE	I-71 SB MAINLINE	ROAD CLOSURE	11PM TO 5AM DAILY	$445 PER MIN PER LANE
I-70 EB TO I-71 NB CLOSURE	I-70 EB TO I-71 NB	ROAD CLOSURE	11PM TO 5AM DAILY	$200 PER MIN PER LANE
I-70 WB TO I-71 NB CLOSURE	I-70 WB TO I-71 NB	ROAD CLOSURE	11PM TO 5AM DAILY	$200 PER MIN PER LANE
I-71 SB TO I-70 WB CLOSURE	I-71 SB TO I-70 WB	ROAD CLOSURE	11PM TO 5AM DAILY	$200 PER MIN PER LANE
I-71 SB TO I-70 EB CLOSURE	I-71 SB TO I-70 EB	ROAD CLOSURE	11PM TO 5AM DAILY	$200 PER MIN PER LANE

ADDITIONAL DISINCENTIVES FOR EACH PHASE CAN BE FOUND ON THEIR RESPECTIVE "PHASE SUMMARY" SHEET.

ELONGATED ROUTE SHIELDS FOR PAVEMENT MARKINGS (PAVEMENT TATTOOS)

INTERSTATE AND ROUTE SHIELDS USAGE

SINGLE SHIELD PER LANE

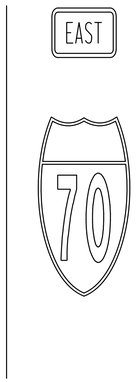

VERTICALLY STACKED SHIELDS (FOR DIVERGING LANES)

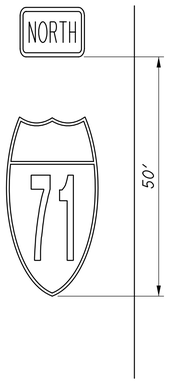

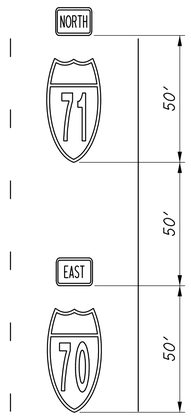

STANDARD SIZES OF SHIELDS

SINGLE SHIELD PER LANE:

TWO DIGITS

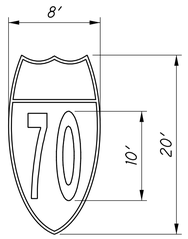

THREE DIGITS

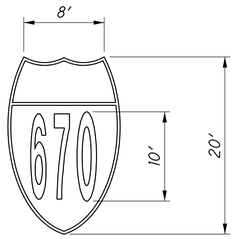

CARDINAL DIRECTIONS

DIRECTION	*WIDTH*	*HEIGHT*
NORTH	*9'-4"*	*8'-2"*
SOUTH	*9'-4"*	*8'-2"*
WEST	*7'-4"*	*8'-2"*
EAST	*7'-3 1/16"*	*8'-2 7/16"*

STANDARD COLOR OF SHIELDS

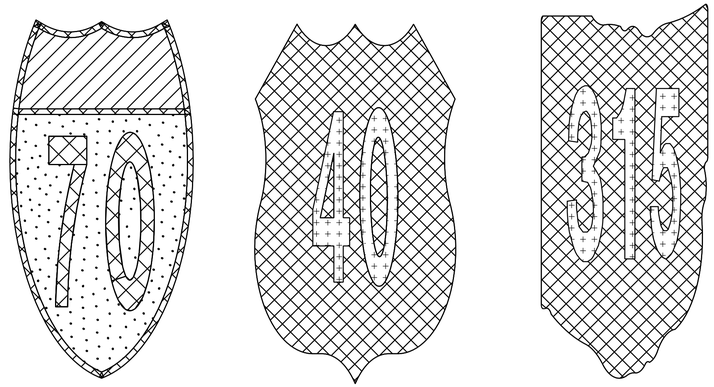

- RED
- BLUE
- WHITE
- BLACK

NOTES:

1. *INTERSTATE AND ROUTE SHIELDS PAVEMENT MARKINGS SHOULD BE DURABLE, HIGH SKID RESISTANT, AND RETROREFLECTIVE.*
2. *THE MARKINGS MUST BE CAPABLE OF CONFORMING TO PAVEMENT CONTOURS, BREAKS, AND FAULTS THROUGH THE ACTION OF TRAFFIC AT NORMAL PAVEMENT TEMPERATURES.*
3. *THE MARKINGS SHALL HAVE RESEALING CHARACTERISTICS, SUCH THAT IT IS CAPABLE OF FUSING WITH ITSELF.*
4. *THE MARKINGS SHALL NOT HAVE MINIMUM AMBIENT ROAD TEMPERATURE REQUIREMENTS FOR APPLICATION, STORAGE, OR HANDLING.*
5. *THE MATERIAL MUST BE ABLE TO BE APPLIED TO ASPHALT AND CONCRETE SURFACES WITHOUT PREHEATING THE APPLICATION SURFACE TO A SPECIFIC TEMPERATURE.*
6. *THE MATERIAL MUST BE CAPABLE OF BEING AFFIXED TO GREEN CONCRETE (CONCRETE THAT HAS SET BUT NOT APPRECIABLY HARDENED).*
7. *THE MATERIAL SHALL NOT REQUIRE THE PORTLAND CEMENT CONCRETE APPLICATION AREAS TO BE CURED OR DRIED OUT.*
8. *THE A MATERIAL MUST BE CAPABLE OF BEING AFFIXED TO BITUMINOUS AND PORTLAND CEMENT CONCRETE PAVEMENT BY THE USE OF THE HEAT OF A PROPANE TORCH, INFRARED HEATER, OR BLUE-FLAME HEATER.*
9. *THE PAVEMENT SHALL BE CLEAN, DRY AND FREE OF DEBRIS BEFORE MATERIAL IS APPLIED.*
10. *THE MATERIAL MUST BE RESISTANT TO DETERIORATION DUE TO EXPOSURE TO SUNLIGHT, WATER, SALT OR ADVERSE WEATHER CONDITION AND IMPERVIOUS TO OIL AND GASOLINE.*
11. *THE TOP SURFACE OF THE MATERIAL SHALL HAVE REGULARLY SPACED INDENTS.*

CALCULATED JAH
CHECKED JML

TRAFFIC - GENERAL NOTES & DETAILS

MAINTENANCE OF TRAFFIC

FRA-70-14.54

ms consultants, inc.

PLOT.CEL
ms consultants, inc.
msconsultants.com
www.msconsultants.com
Ohio DOT Workspace
70\71 East Interchange 2E
0 0.5" 1"
Batchplot Spec: \\msconsultants.com\files\production\03\60\06634_2E\standards\plotdrv\batchplt.spc PDF: ohdot\V8i
Pen Table: \\msconsultants.com\files\Standards\ustn\ohdot\V8i\ms\plotting\pen\V8i_ms_std.tbl DGF: 60-06634_2E_Columbus
Plot Driver: \\msconsultants.com\files\Standards\ustn\ohdot\V8i\ms\plotting\PDF.pltcfg
Model: Sheet View: FENCE_VIEW1
Printed: 9/28/2018 @ 10:05:58 AM By: kryan
File: N:\03\60\06634_2E\mot\sheets\105322NM0005.dgn
34" x 22"

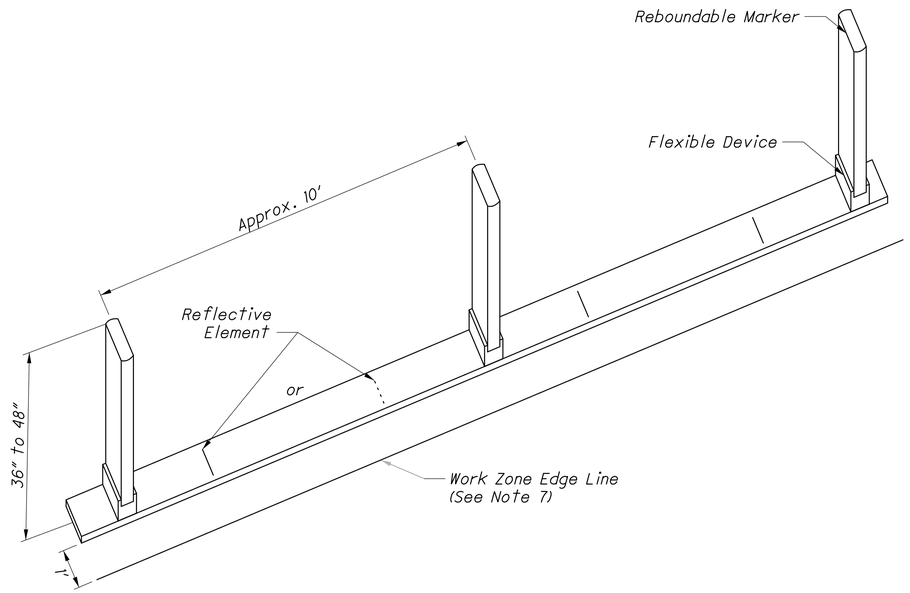

LONGITUDINAL CHANNELIZER

NOTES:

1. Provide longitudinal channelizer rather than drums at entrance ramp merges, as shown in the figures, to separate the mainline through lane from the entrance ramp acceleration lane.
2. The design of the longitudinal channelizer may vary from manufacturer to manufacturer. It shall consist of two main components - a base component consisting of interlocking units and a vertical reboundable marker/channelizer component. The shape of the vertical component may vary from manufacturer to manufacturer. The width shall be approximately 8" to 9" for elliptical designs and 4" to 6" for round (tubular) designs. The height of the vertical component shall be within the range of 36" minimum to 48" maximum.
3. The longitudinal channelizer shall be NCHRP 350 compliant.
4. The vertical component shall be equipped with retroreflective sheeting or with retroreflective stripes. Where stripes are used, the stripes shall consist of two 3" wide bands placed a maximum of 2" from the top with a maximum of 6" between the bands.
5. The base component shall be equipped with reflectors.
6. The color of the base component, including the attached reflectors, and of the retroreflective sheeting or bands for the vertical components shall be in conformance with the pavement marking colors established in the Ohio Manual of Uniform Traffic Control Devices.
7. Where edge line is provided adjacent to the longitudinal channelizer, the edge line should be located 1' from the longintudinal channelizer. The edge line should be provided if the resulting lane width would be 11' or greater.
8. For additional information regarding traffic control at entrance ramps, see Standard Construction Drawings MT-98.10 and MT-98.11.

CALCULATED JAH
CHECKED JML

LONGITUDINAL CHANNELIZER DETAIL

THIS DRAWING REPLACES PIS 2010180 DATE 4-17-2009.

FRA-70-14.54

PIS NUMBER 2010180

ms consultants, inc.

PLOT.CEL

ms consultants, inc.
msconsultants.com

www.msconsultants.com
Ohio DOT Workspace
70\71 East Interchange 2E

UCF: ohdotV8i
PCF: 60-06634_2E_Columbus

Batchplot Spec: \\msconsultants.com\files\production\03\60\06634_2E\standards\plotdrv\batchplt.spc
Pen Table: N:\03\60\06634_2E\standards\tables\V8i_ms_std_06634_2D_Plan View_NoClouds.tbl
Plot Driver: \\msconsultants.com\files\Standards\ustn\ohdot\v8i\ms\plotting\PDF.pltcfg

34" x 22"

Model: Sheet View: FENCE_VIEW1
Printed: 1/17/2019 @ 12:54:52 PM By: awhite
File: \\msconsultants.com\files\Production\03\60\06634_2E\mot\sheets\105322MS001.dgn

MAINTENANCE OF TRAFFIC SUBSUMMARY

* QUANTITY DIFFERS FROM STATION RANGE, SEE PLAN

SHEET NO.	STATION FROM	STATION TO	SIDE	614 WORK ZONE IMPACT ATTENUATOR (UNIDIRECTIONAL)	614 BARRIER REFLECTOR, TYPE 1	614 OBJECT MARKER, ONE WAY	614 OBJECT MARKER, TWO WAY	614 WORK ZONE RAISED PAVEMENT MARKER, AS PER PLAN	614 LL WORK ZONE PAVEMENT MARKING, MISC.: LANE LINE, 6"	614 WE WORK ZONE PAVEMENT MARKING, MISC.: EDGE LINE, WHITE, 6"	614 YE WORK ZONE PAVEMENT MARKING, MISC.: EDGE LINE, YELLOW, 6"	614 CH WORK ZONE PAVEMENT MARKING, MISC.: CHANNELIZING LINE, 12"	614 WD WORK ZONE PAVEMENT MARKING, MISC.: DOTTED LINE, WHITE, 6"	614 A WORK ZONE ARROW, CLASS I	614 TR WORK ZONE PAVEMENT MARKING, MISC.: TRANSVERSE LINE, 24"	614 LL WORK ZONE LANE LINE, CLASS 1, 6", 642 PAINT	614 WE WORK ZONE EDGE LINE, CLASS 1, 6", 642 PAINT, WHITE	614 YE WORK ZONE EDGE LINE, CLASS 1, 6", 642 PAINT, YELLOW	614 CH WORK ZONE CHANNELIZING LINE, CLASS 1, 12", 642 PAINT	614 WD WORK ZONE DOTTED LINE, CLASS 1, 642 PAINT, WHITE	614 (LL) WORK ZONE PAVEMENT MARKING, MISC.: LANE LINE, 5"	614 (DY) WORK ZONE PAVEMENT MARKING, MISC.: CENTER LINE, SOLID DOUBLE, YELLOW, 5"	614 (WE) WORK ZONE PAVEMENT MARKING, MISC.: EDGE LINE, WHITE, 5"	614 (YE) WORK ZONE PAVEMENT MARKING, MISC.: EDGE LINE, YELLOW, 5"	614 (CH) WORK ZONE PAVEMENT MARKING, MISC.: CHANNELIZING LINE, 10"	614 (WD) WORK ZONE PAVEMENT MARKING, MISC.: DOTTED LINE, WHITE, 5"	614 (DYD) WORK ZONE PAVEMENT MARKING, MISC.: DOTTED LINE, DOUBLE YELLOW, 5"	614 (SL) WORK ZONE PAVEMENT MARKING, MISC.: STOP LINE, 20"	614 MAINTAINING TRAFFIC, MISC.: PORTABLE WATER FILLED BARRIER PROTECTED PEDESTRIAN WALKWAY	614 LONGITUDINAL CHANNELIZER	614 SPECIAL - WORK ZONE GUARDRAIL	615 PAVEMENT FOR MAINTAINING TRAFFIC, CLASS A	615 PAVEMENT FOR MAINTAINING TRAFFIC, CLASS A, AS PER PLAN	615 PAVEMENT FOR MAINTAINING TRAFFIC, CLASS B	622 PORTABLE BARRIER, 32"	622 PORTABLE BARRIER, 50", AS PER PLAN	622 PORTABLE BARRIER, "Y" CONNECTOR	630 SIGN, TEMPORARY OVERLAY	630 REMOVAL OF TEMPORARY OVERLAY SIGN AND DISPOSAL	814 W CARDINAL DIRECTION (NORTH, SOUTH, WEST & EAST) MARKING, TYPE B125	814 RS INTERSTATE ELONGATED ROUTE SHIELD SYMBOL MARKING, TYPE B125
	FROM	TO		EACH	EACH	EACH	EACH	EACH	FT/MI	FT/MI	FT/MI	FT	FT	EACH	FT	FT/MI	FT/MI	FT/MI	FT	FT	FT/MI	FT/MI	FT/MI	FT/MI	FT	FT	FT	FT	FT	FT	FT	SQYD	SQYD	SQYD	FT	FT	EACH	SQFT	EACH	EACH	EACH
	TYPICAL DETAILS																																								
	I-71 NB																																								
144	SEE SHEET																																					238	4		
	I-670 EB																																								
146	SEE PLAN							30		2590		1222																										294	6		
147	SEE PLAN																																					45	1		
148	SEE PLAN									1100		440																													
149	SEE PLAN												460																	1700											
	MEDIAN/SHOULDER FOUNDATION WORK																																								
	I-70																																								
193	SEE SHEET		LT/RT					225				4476																													
194	SEE SHEET		LT/RT	3	57	19		46			898																								860						
196	69+81	86+00	LT					163				3233																													
	72+81	83+00	LT/RT					118		1018	1018																														
197	75+11	79+80	RT	1	33	11																													470						
	76+11	80+90	RT	1	33	11																													480						
	PHASE 1B																																								
	TRANS. I-70 WB & TRANS. I-71 SB - STEP 1																																								
	TRANS I-70 WB																																								
205	85+70	92+89	LT									2159																													
	85+70	92+89	LT								718																														
	85+70	92+89	LT							722																															
206	92+89	102+90	LT/RT					195		1952	1952																														
	92+89	102+90	LT/RT									1002																													
	92+89	93+43	LT									106																													
	92+89	102+90	LT		114	38																													1900						
	99+34	102+90	LT																													185									
	TRANS 1-70 WB																																								
207	102+90	111+50	LT							855	853																														
	102+90	111+00	LT/RT	1	48	16																													803						
	102+90	106+76	LT																													246									
	TRANS I-71 SB																																								
	102+90	104+69	LT								182	180																													
	102+90	108+31	LT							534																															
	102+90	110+13	LT		80	30																													1295						
	110+16	114+50	RT																													283									
208	114+15	117+60	RT																													447									
209	111+50	121+55	LT							1015																															
	111+50	121+82	LT/RT								1040																														
	121+07	121+82	RT		3	1																													75						
	121+55	121+80	RT									27																													
210	121+82	131+50	LT									970																													
	121+82	126+77	RT	1	33	11																													495						
	123+00	125+00	LT/RT									50																													
	121+82	128+50	LT/RT								670																														
	123+00	128+50	LT/RT							550																															
211	I-70 WB																																					240	3		
	TOTAL THIS SHEET			7	401	137		777		10336	7331	13865	460																	1700		1161			6378			817	14		

CALCULATED JAH
CHECKED JML

FRA-70-14.54

ms consultants, inc.

PLOT.CEL

ms consultants, inc.
msconsultants.com

Ohio DOT Workspace
70\71 East Interchange 2E
www.msconsultants.com

MAINTENANCE OF TRAFFIC SUBSUMMARY

CALCULATED JAH
CHECKED JML

* QUANTITY DIFFERS FROM STATION RANGE, SEE PLAN

SHEET NO.	STATION FROM	STATION TO	SIDE	614 WORK ZONE IMPACT ATTENUATOR (UNIDIRECTIONAL) EACH	614 BARRIER REFLECTOR, TYPE 1 EACH	614 OBJECT MARKER, ONE WAY EACH	614 OBJECT MARKER, TWO WAY EACH	614 WORK ZONE RAISED PAVEMENT MARKER, AS PER PLAN EACH	614 LL WORK ZONE PAVEMENT MARKING, MISC.: LANE LINE, 6" FT/MI	614 WE WORK ZONE PAVEMENT MARKING, MISC.: EDGE LINE, WHITE, 6" FT/MI	614 YE WORK ZONE PAVEMENT MARKING, MISC.: EDGE LINE, YELLOW, 6" FT/MI	614 CH WORK ZONE PAVEMENT MARKING, MISC.: CHANNELIZING LINE, 12" FT	614 WD WORK ZONE PAVEMENT MARKING, MISC.: DOTTED LINE, WHITE, 6" FT	614 A WORK ZONE ARROW, CLASS I EACH	614 TR WORK ZONE PAVEMENT MARKING, MISC.: TRANSVERSE LINE, 24" FT	614 LL WORK ZONE LANE LINE, CLASS 1, 6", 642 PAINT FT/MI	614 WE WORK ZONE EDGE LINE, CLASS 1, 6", 642 PAINT, WHITE FT/MI	614 YE WORK ZONE EDGE LINE, CLASS 1, 6", 642 PAINT, YELLOW FT/MI	614 CH WORK ZONE CHANNELIZING LINE, CLASS 1, 12", 642 PAINT FT	614 WD WORK ZONE DOTTED LINE, CLASS 1, 642 PAINT, WHITE FT	614 (LL) WORK ZONE PAVEMENT MARKING, MISC.: LANE LINE, 5" FT/MI	614 (DY) WORK ZONE PAVEMENT MARKING, MISC.: CENTER LINE, SOLID DOUBLE, YELLOW, 5" FT/MI	614 (WE) WORK ZONE PAVEMENT MARKING, MISC.: EDGE LINE, WHITE, 5" FT/MI	614 (YE) WORK ZONE PAVEMENT MARKING, MISC.: EDGE LINE, YELLOW, 5" FT/MI	614 (CH) WORK ZONE PAVEMENT MARKING, MISC.: CHANNELIZING LINE, 10" FT	614 (WD) WORK ZONE PAVEMENT MARKING, MISC.: DOTTED LINE, WHITE, 5" FT	614 (DYD) WORK ZONE PAVEMENT MARKING, MISC.: DOTTED LINE, DOUBLE YELLOW, 5" FT	614 (SL) WORK ZONE PAVEMENT MARKING, MISC.: STOP LINE, 20" FT	614 MAINTAINING TRAFFIC, MISC.: PORTABLE WATER FILLED BARRIER PROTECTED PEDESTRIAN WALKWAY FT	614 LONGITUDINAL CHANNELIZER FT	614 SPECIAL - WORK ZONE GUARDRAIL FT	615 PAVEMENT FOR MAINTAINING TRAFFIC, CLASS A SQYD	615 PAVEMENT FOR MAINTAINING TRAFFIC, CLASS A, AS PER PLAN SQYD	615 PAVEMENT FOR MAINTAINING TRAFFIC, CLASS B SQYD	622 PORTABLE BARRIER, 32" FT	622 PORTABLE BARRIER, 50", AS PER PLAN FT	622 PORTABLE BARRIER, "Y" CONNECTOR EACH	630 SIGN, TEMPORARY OVERLAY SQFT	630 REMOVAL OF TEMPORARY OVERLAY SIGN AND DISPOSAL EACH	814 W CARDINAL DIRECTION (NORTH, SOUTH, WEST & EAST) MARKING, TYPE B125 EACH	814 RS INTERSTATE ELONGATED ROUTE SHIELD SYMBOL MARKING, TYPE B125 EACH
	PHASE 1B																																								
	TRANS. I-70 WB & TRANS. I-71 SB - STEP 2																																								
	I-70 WB																																								
212	85+70	768+00*	LT							736					161																										
213	768+00*	778+00	LT							1000					58																										
	93+43	93+93	LT									50																													
	93+93	778*	LT								900																														
	93+93	778+00*	LT																															674							
214	778+00*	111+50*	LT/RT							1015	1015																														
	778+00	111+30	LT	1	51	17																												842							
	108+00	114+25	LT							623	627	635																													
	113+00	114+25	LT		9	5																												125							
	I-71 SB																																								
215	114+25	125+50	LT							1286	1282	2250																													
	114+25	120+07	LT/RT	1	30	10																												580							
	I-70 WB																																								
215A	125+50	126+50	LT/RT							100	100																														
	125+50	129+50	LT/RT									676																													
216	111+50	121+55	RT							1007																															
	121+55	121+82	RT									27																													
	111+50	121+82	RT								1027																														
217	121+82	124+00	RT								218																														
	121+82	128+50	RT									670																													
	PHASE 1B																																								
	TRANS. I-70 WB & TRANS. I-71 SB - STEP 3																																								
	I-70 WB																																								
219	78+80	82+00	LT		8	3																													331						
	I-70 EB																																								
	73+75*	82+00	RT									1680																													
	76+75*	82+00	RT								540																														
	76+75*	79+50	RT							275																															
	79+50*	82+00	RT									250																													
	79+80	82+00	RT	1	15	5																												220							
	I-70 WB																																								
220	82+00	768+00*	LT	1	63	21		12	1440	33	718																						4241			1010					
	I-70 EB																																								
	82+00	88+10	RT		39	13					610																								605						
	82+00	91+87	RT					149				2961																													
	I-70 WB																																								
221																																									
	768+00*	95+90*	LT/RT		18	6																													300						
	95+80	100+07	LT	1	27	9																													427						
	768+00*	778+00*	LT					11	1302	388	1285	827																													
222	778+00	111+50*	LT/RT							808	808																														
	I-71 SB																																								
	778+00*	988+00*	LT/RT					9	990		990																														
	987+00	988+00	RT		6	2																												100							
	I-70 EB TO I-71 NB																																								
	793+69	797+50	LT					60		381	381	381																													
	794+22	797+21	LT	1	18	6																												300							
	TEMP. PAVEMENT (TR-2D)																																1652								
	I-71 SB																																								
223	988+00	999+00	LT					103		944		1100																													
	988+00	992+56	RT								456																														
	992+56	993+50	RT									240																													
	988+00	992+31	RT	1	36	12																												561							
	989+85	999+00	RT					141		294	930	930																													
	I-70 EB TO I-71 NB																																								
	797+50	798+17	LT					12		67	67	67																													
	I-70 WB																																								
223A	111+50	120+00	LT/RT							850	850																														
TOTAL THIS SHEET				7	320	109		497	3732	9807	12804	12744			219																		10023		4007	2068					

FRA-70-14.54

ms consultants, inc.

Batchplot Spec: \\msconsultants.com\files\production\03\60\06634_2E\standards\plotdrv\batchplt.spc
Pen Table: N:\03\60\06634_2E\standards\tables\V8i_ms_std_NoClouds.tbl
Plot Driver: \\msconsultants.com\files\Standards\ustn\ohdot\v8i\ms\plotting\PDF.pltcfg
UCF: ohdotV8i
PCF: 60-06634_2E_Columbus
34" x 22"
Model: Sheet
Printed: 2/12/2019 @ 12:35:22 PM
File: N:\03\60\06634_2E\mot\sheets\105322MS002.dgn
View: FENCE_VIEW1
By: hbrendlinger

PLOT.CEL
ms consultants, inc.
msconsultants.com
Ohio DOT Workspace
70\71 East Interchange 2E
www.msconsultants.com
0 0.5" 1"
Batchplot Spec: \\msconsultants.com\files\production\Q3\60\06634_2E\standards\plotdrv\batchplt.spc
Pen Table: N:\Q3\60\06634_2E\standards\tables\V8i_ms_std_06634_2D_Plan View_NoClouds.tbl
Plot Driver: \\msconsultants.com\files\Standards\ustn\ohdot\v8i\ms\plotting\PDF.pltcfg
PDF: ohdotV8i
PDF: 60-06634_2E_Columbus
34" x 22"
View: FENCE_VIEW1
By: awhite
Model: Sheet
Printed: 2/12/2019 @ 9:56:54 AM
File: N:\Q3\60\06634_2E\mot sheets\105322MS003.dgn

MAINTENANCE OF TRAFFIC SUBSUMMARY

CALCULATED JAH
CHECKED JML

SHEET NO.	STATION		SIDE	614 WORK ZONE IMPACT ATTENUATOR (UNIDIRECTIONAL)	614 BARRIER REFLECTOR, TYPE 1	614 OBJECT MARKER, ONE WAY	614 OBJECT MARKER, TWO WAY	614 WORK ZONE RAISED PAVEMENT MARKER, AS PER PLAN	614 LL WORK ZONE PAVEMENT MARKING, MISC.: LANE LINE, 6"	614 WE WORK ZONE PAVEMENT MARKING, MISC.: EDGE LINE, WHITE, 6"	614 YE WORK ZONE PAVEMENT MARKING, MISC.: EDGE LINE, YELLOW, 6"	614 CH WORK ZONE PAVEMENT MARKING, MISC.: CHANNELIZING LINE, 12"	614 WD WORK ZONE PAVEMENT MARKING, MISC.: DOTTED LINE, WHITE, 6"	614 A WORK ZONE ARROW, CLASS I	614 TR WORK ZONE PAVEMENT MARKING, MISC.: TRANSVERSE LINE, 24"	614 LL WORK ZONE LANE LINE, CLASS I, 6", 642 PAINT	614 WE WORK ZONE EDGE LINE, CLASS I, 6", 642 PAINT, WHITE	614 YE WORK ZONE EDGE LINE, CLASS I, 6", 642 PAINT, YELLOW	614 CH WORK ZONE CHANNELIZING LINE, CLASS I, 12", 642 PAINT	614 WD WORK ZONE DOTTED LINE, CLASS I, 642 PAINT, WHITE	614 LL WORK ZONE PAVEMENT MARKING, MISC.: LANE LINE, 5"	614 DY WORK ZONE PAVEMENT MARKING, MISC.: CENTER LINE, SOLID DOUBLE, YELLOW, 5"	614 WE WORK ZONE PAVEMENT MARKING, MISC.: EDGE LINE, WHITE, 5"	614 YE WORK ZONE PAVEMENT MARKING, MISC.: EDGE LINE, YELLOW, 5"	614 CH WORK ZONE PAVEMENT MARKING, MISC.: CHANNELIZING LINE, 10"	614 WD WORK ZONE PAVEMENT MARKING, MISC.: DOTTED LINE, WHITE, 5"	614 DYD WORK ZONE PAVEMENT MARKING, MISC.: DOTTED LINE, DOUBLE YELLOW, 5"	614 SL WORK ZONE PAVEMENT MARKING, MISC.: STOP LINE, 20"	614 MAINTAINING TRAFFIC, MISC.: PORTABLE WATER FILLED BARRIER PROTECTED PEDESTRIAN WALKWAY	614 LONGITUDINAL CHANNELIZER	614 SPECIAL - WORK ZONE GUARDRAIL	615 PAVEMENT FOR MAINTAINING TRAFFIC, CLASS A	615 PAVEMENT FOR MAINTAINING TRAFFIC, CLASS A, AS PER PLAN	615 PAVEMENT FOR MAINTAINING TRAFFIC, CLASS B	622 PORTABLE BARRIER, 32"	622 PORTABLE BARRIER, 50", AS PER PLAN	622 PORTABLE BARRIER, "Y" CONNECTOR	630 SIGN, TEMPORARY OVERLAY	630 REMOVAL OF TEMPORARY OVERLAY SIGN AND DISPOSAL	814 W CARDINAL DIRECTION (NORTH, SOUTH, WEST & EAST) MARKING, TYPE B125	814 RS INTERSTATE ELONGATED ROUTE SHIELD SYMBOL MARKING, TYPE B125
	* QUANTITY DIFFERS FROM STATION RANGE, SEE PLAN																																							
	FROM	TO		EACH	EACH	EACH	EACH	EACH	FT/MI	FT/MI	FT/MI	FT	FT	EACH	FT	FT/MI	FT/MI	FT/MI	FT	FT	FT/MI	FT/MI	FT/MI	FT/MI	FT	FT	FT	FT	FT	FT	FT	FT	SQYD	SQYD	SQYD	FT	FT	EACH	SQFT	EACH	EACH	EACH
	PHASE 1C																																							
	RAMP P2																																							
	I-70 WB																																							
225	791+86	799+00	LT/RT					108		714	714	714																													
	795+71	799+00	LT/RT		21	7																															329				
	I-71 SB TO I-70 EB																																							
	214+57	218+93	RT																															311						
226	899+00*	809+83*	LT/RT							1000																									1301						
	899+00*	806+83*	LT/RT									793																													
	806+83	809+00	LT					2	217																																
	899+00*	799+72	LT/RT								75																															
	799+72	809+00	LT									928			209																											
	803+20	809+00	LT								580	220																													
	806+00	809+00	LT					3	300																																
	899+00*	807+04*	LT/RT	1	51	17																															813				
	808+24	809+00	LT		6	2																															76				
	808+75		LT																																			90			
227	809+00*	820+00*	LT		69	23		28	3245	1100	1100	55																										1120				
228	820+00*	828+75*	LT					22	2625																																
	820+00	826+50	LT							650	650																														
	820+00	821+15	LT	1	9	3																															115				
	PHASE 1D - STEP 1																																							
	I-71 SB TO I-70 EB																																							
229	211+87	791+50*	LT/RT					60		383	383	383																													
230	791+50*	800+00*	LT/RT					108		720	720	886																													
	I-70 WB																																							
	119+65*	800+00*	LT/RT		51	17		1	104	127	77																										183	620			
	798+46	799+74	LT/RT																															175			160				
	223+00	803+41	LT/RT																															685							
	I-71 NB																																							
	795+71	800+00	LT/RT					4	430	430	430																														
	I-70 WB																																							
231	800+00	808+00	LT		48	16		7	800		800																											800			
	800+00	806+37	LT							637																															
	800+00	126+61	LT	1	6	2																															86				
	806+37	808+00	LT									163																													
	I-71 NB																																							
	800+00	808+00	LT					7	800	800																														
	800+00	806+37	LT								637																														
	806+37	808+00	LT									163																													
	804+25*	806+15*	LT	1	24	8																															380		1		
	I-70 EB																																							
	800+00*	808+00*	RT					115				2290																													
	804+15	808+00	RT					40		385	385																														
	806+90	808+00	RT	1	3	1																															110				
	I-70 WB																																							
232	808+00*	818+00*	LT	1	54	18		24	879		1000	814																											892		
	I-71 NB																																							
	808+00	818+00	LT					17	1066	1000		936																										323				
	808+25	810+45	LT	1	14	5																															220				
	I-70 EB																																							
	808+00*	818+00*	RT		60	20		57	2640	1000	1000	360																										1000				
	812+53	814+12	RT																															159							
	I-70 WB / I-70 EB																																							
233	818+00*	827+30*	LT/RT					279				5580																													
	818+00*	824+30*	LT/RT					126		1260	1260																														
	818+00*	819+30*	LT/RT		9	3																															130				
	818+00*	820+00*	LT/RT	1	12	4																																200				
	TOTAL THIS SHEET			8	437	146		1008	13106	10206	9811	14285			209																			159	1494	2816		4722	2512	1	90			

FRA-70-14.54

ms consultants, inc.

MAINTENANCE OF TRAFFIC SUBSUMMARY

* QUANTITY DIFFERS FROM STATION RANGE, SEE PLAN

SHEET NO.	STATION FROM	STATION TO	SIDE	614 WORK ZONE IMPACT ATTENUATOR (UNIDIRECTIONAL) EACH	614 BARRIER REFLECTOR, TYPE 1 EACH	614 OBJECT MARKER, ONE WAY EACH	614 OBJECT MARKER, TWO WAY EACH	614 WORK ZONE RAISED PAVEMENT MARKER, AS PER PLAN EACH	614 LL WORK ZONE PAVEMENT MARKING, MISC.: LANE LINE, 6" FT/MI	614 WE WORK ZONE PAVEMENT MARKING, MISC.: EDGE LINE, WHITE, 6" FT/MI	614 YE WORK ZONE PAVEMENT MARKING, MISC.: EDGE LINE, YELLOW, 6" FT/MI	614 CH WORK ZONE PAVEMENT MARKING, MISC.: CHANNELIZING LINE, 12" FT	614 WD WORK ZONE PAVEMENT MARKING, MISC.: DOTTED LINE, WHITE, 6" FT	614 A WORK ZONE ARROW, CLASS I EACH	614 TR WORK ZONE PAVEMENT MARKING, MISC.: TRANSVERSE LINE, 24" FT	614 LL WORK ZONE LANE LINE, CLASS 1, 6", 642 PAINT FT/MI	614 WE WORK ZONE EDGE LINE, CLASS 1, 6", 642 PAINT, WHITE FT/MI	614 YE WORK ZONE EDGE LINE, CLASS 1, 6", 642 PAINT, YELLOW FT/MI	614 CH WORK ZONE CHANNELIZING LINE, CLASS 1, 12", 642 PAINT FT	614 WD WORK ZONE DOTTED LINE, CLASS 1, 642 PAINT, WHITE FT	614 (LL) WORK ZONE PAVEMENT MARKING, MISC.: LANE LINE, 5" FT/MI	614 (DY) WORK ZONE PAVEMENT MARKING, MISC.: CENTER LINE, SOLID DOUBLE, YELLOW, 5" FT/MI	614 (WE) WORK ZONE PAVEMENT MARKING, MISC.: EDGE LINE, WHITE, 5" FT/MI	614 (YE) WORK ZONE PAVEMENT MARKING, MISC.: EDGE LINE, YELLOW, 5" FT/MI	614 (CH) WORK ZONE PAVEMENT MARKING, MISC.: CHANNELIZING LINE, 10" FT	614 (WD) WORK ZONE PAVEMENT MARKING, MISC.: DOTTED LINE, WHITE, 5" FT	614 (DYD) WORK ZONE PAVEMENT MARKING, MISC.: DOTTED LINE, DOUBLE YELLOW, 5" FT	614 (SL) WORK ZONE PAVEMENT MARKING, MISC.: STOP LINE, 20" FT	614 MAINTAINING TRAFFIC, MISC.: PORTABLE WATER FILLED BARRIER PROTECTED PEDESTRIAN WALKWAY FT	614 LONGITUDINAL CHANNELIZER FT	614 SPECIAL - WORK ZONE GUARDRAIL FT	615 PAVEMENT FOR MAINTAINING TRAFFIC, CLASS A SQYD	615 PAVEMENT FOR MAINTAINING TRAFFIC, CLASS A, AS PER PLAN SQYD	615 PAVEMENT FOR MAINTAINING TRAFFIC, CLASS B SQYD	622 PORTABLE BARRIER, 32" FT	622 PORTABLE BARRIER, 50", AS PER PLAN FT	622 PORTABLE BARRIER, "Y" CONNECTOR EACH	630 SIGN, TEMPORARY OVERLAY SQFT	630 REMOVAL OF TEMPORARY OVERLAY SIGN AND DISPOSAL EACH	814 W CARDINAL DIRECTION (NORTH, SOUTH, WEST & EAST) MARKING, TYPE B125 EACH	814 RS INTERSTATE ELONGATED ROUTE SHIELD SYMBOL MARKING, TYPE B125 EACH
	PHASE 1D - STEP 2																																								
	I-70 EB/TR-2A																																								
234A	SEE PLAN		RT																																		849			
235	SEE PLAN		RT																																		132	2		
235A	71+82		RT																																		353			
	74+36		RT																																					3
	74+82																																						3	
	I-70 EB																																								
236	75+36		RT																																					1
	75+83		RT																																				1	
	76+78	86+00	LT/RT								922																														
	77+38	80+90	RT									352																													
	77+38	85+36	RT							798																															
	78+32	86+00	LT/RT					39				768																													
	82+63	85+36	LT/RT									273																													
	85+36	86+00	LT/RT							64																															
	81+05	86+00	LT		30	10																													500					
	I-70 EB/TR-2A																																								
236A	86+00*	771+00*	LT		30	10		304		1000	1000	1000																							500					
	766+00	767+00	LT	1	6	2																												100						
	770+11	771+00	LT	1	6	2																												89						
	I-71 NB																																								
	89+09*	771+00*	RT					102		680	524	1204	170																												
	I-70 EB/TR-2A																																								
237	771+00*	682+00*	RT					165		1100	1100	1100																													
	673+80	682+00	RT		51	17																													820					
	771+00*	681+92*	RT		66	22																												1092						
	I-71 NB																																								
	771+00	772+34	RT									134																													
	779+80*	682+00*	LT/RT									233																													
	18TH ST RAMP																																								
	771+00	777+23	LT										623																								20			
	771+00*	682+00*	LT/RT							1125																															
	I-70 EB/TR-2A																																								
237A	682+00*	792+50	LT/RT		69	23		8	950	1140	1140	190																							1140					
	I-71 NB																																								
	682+00*	793+20*	LT/RT									450																													
	789+50	793+20	LT							370	370																														
	I-71 SB TO I-70 EB																																								
	212+06	216+00	LT/RT					40				788																													
	212+06*	792+50*	LT/RT							890																															
	214+57*	792+50*	LT/RT								221																														
	216+00*	792+50*	RT	1	6	2					82																							82						
	18TH ST RAMP																																								
	682+00*	792+10*	RT							960																															
	790+44	792+50	RT									412																													
	I-70 EB/TR-2A/I-70 WB																																								
238	792+50*	903+50*	LT/RT		138	46		10	1120	680	1120	440																							1120					
	219+80	221+30	LT							150	150																														
	I-71 SB TO I-70 EB																																								
	792+50*	903+50*	LT/RT		27	9				1105	665	410																						441						
	792+50*	903+50*	LT/RT							512	1100	395																													
	MOUND ST RAMP																																								
	221+30*	903+50*	LT/RT							700	790	1050																													
	18TH ST RAMP																																								
	792+50	796+55	RT									405																													
	3RD ST TO I-70 EB																																								
	792+50*	903+50*	RT							499	450	641																													
	I-70 EB																																								
238A	903+50*	814+00	LT/RT		66	22		646	230	230	1060	2720																							1060					
	803+50	804+50	LT	1	6	2																												100						
	TR-2A																																								
	903+50*	814+00*	LT/RT							300	1060	1390																													
	I-71 NB																																								
	903+50*	814+00*	LT/RT							670		1440																													
	I-71 SB/3RD ST TO I-70 EB																																								
	903+50*	814+00*	RT								570	570																													
TOTAL THIS SHEET				4	501	167		1314	2300	12973	12324	16365	793																					1904	5140		1354	2	4	4

CALCULATED JAH CHECKED JML

FRA-70-14.54

PLOT.CEL
ms consultants, inc.
msconsultants.com
www.msconsultants.com
Ohio DOT Workspace
70\71 East Interchange 2E
Batchplot Spec: \\msconsultants.com\files\production\03\60\06634_2E\standards\plotdrv\batchplt.spc UCF: ohdotV8i
Pen Table: N:\03\60\06634_2E\standards\tables\V8i_ms_std_06634_2D_Plan View_NoClouds.tbl PCF: 60-06634_2E_Columbus
Plot Driver: \\msconsultants.com\files\Standards\ustn\ohdot\v8i\ms\plotting\PDF.pltcfg
34" x 22"
Model: Sheet View: FENCE_VIEW1
Printed: 1/17/2019 @ 1:06:22 PM By: awhite
File: \\msconsultants.com\files\Production\03\60\06634_2E\mot\sheets\105322MS004.dgn
ms consultants, inc.

PLOT.CEL
ms consultants, inc.
msconsultants.com
www.msconsultants.com
Ohio DOT Workspace
70\71 East Interchange 2E
1" 0 0.5"
Batchplot Spec: \\msconsultants.com\files\production\03\60\06634_2E\standards\plotdrv\batchplt.spc
Pen Table: N:\03\60\06634_2E\standards\tables\V8i_ms_std_06634_2D_Plan View_NoClouds.tbl
Plot Driver: \\msconsultants.com\files\Standards\ustn\ohdot\v8i\ms\plotting\PDF.pltcfg
Model: Sheet
Printed: 1/17/2019 @ 1:10:08 PM
File: \\msconsultants.com\files\Production\03\60\06634_2E\mot\sheets\105322MS005.dgn
View: FENCE_VIEW1
By: awhite
34" x 22"

SHEET NO.	STATION		SIDE	614 WORK ZONE IMPACT ATTENUATOR (UNIDIRECTIONAL)	614 BARRIER REFLECTOR, TYPE 1	614 OBJECT MARKER, ONE WAY	614 OBJECT MARKER, TWO WAY	614 WORK ZONE RAISED PAVEMENT MARKER, AS PER PLAN	614 LL WORK ZONE PAVEMENT MARKING, MISC.: LANE LINE, 6"	614 WE WORK ZONE PAVEMENT MARKING, MISC.: EDGE LINE, WHITE, 6"	614 YE WORK ZONE PAVEMENT MARKING, MISC.: EDGE LINE, YELLOW, 6"	614 CH WORK ZONE PAVEMENT MARKING, MISC.: CHANNELIZING LINE, 12"	614 WD WORK ZONE PAVEMENT MARKING, MISC.: DOTTED LINE, WHITE, 6"	614 A WORK ZONE ARROW, CLASS 1	614 TR WORK ZONE PAVEMENT MARKING, MISC.: TRANSVERSE LINE, 24"	614 LL WORK ZONE LANE LINE, CLASS 1, 6", 642 PAINT	614 WE WORK ZONE EDGE LINE, CLASS 1, 6", 642 PAINT, WHITE	614 YE WORK ZONE EDGE LINE, CLASS 1, 6", 642 PAINT, YELLOW	614 CH WORK ZONE CHANNELIZING LINE, CLASS 1, 12", 642 PAINT	614 WD WORK ZONE DOTTED LINE, CLASS 1, 642 PAINT, WHITE	614 LL WORK ZONE PAVEMENT MARKING, MISC.: LANE LINE, 5"	614 DY WORK ZONE PAVEMENT MARKING, MISC.: CENTER LINE, SOLID DOUBLE, YELLOW, 5"	614 WE WORK ZONE PAVEMENT MARKING, MISC.: EDGE LINE, WHITE, 5"	614 YE WORK ZONE PAVEMENT MARKING, MISC.: EDGE LINE, YELLOW, 5"	614 CH WORK ZONE PAVEMENT MARKING, MISC.: CHANNELIZING LINE, 10"	614 WD WORK ZONE PAVEMENT MARKING, MISC.: DOTTED LINE, WHITE, 5"	614 DYD WORK ZONE PAVEMENT MARKING, MISC.: DOTTED LINE, DOUBLE YELLOW, 5"	614 SL WORK ZONE PAVEMENT MARKING, MISC.: STOP LINE, 20"	614 MAINTAINING TRAFFIC, MISC.: PORTABLE WATER FILLED BARRIER PROTECTED PEDESTRIAN WALKWAY	614 LONGITUDINAL CHANNELIZER	614 SPECIAL - WORK ZONE GUARDRAIL	615 PAVEMENT FOR MAINTAINING TRAFFIC, CLASS A	615 PAVEMENT FOR MAINTAINING TRAFFIC, CLASS A, AS PER PLAN	615 PAVEMENT FOR MAINTAINING TRAFFIC, CLASS B	622 PORTABLE BARRIER, 32"	622 PORTABLE BARRIER, 50", AS PER PLAN	622 PORTABLE BARRIER, "Y" CONNECTOR	630 SIGN, TEMPORARY OVERLAY	630 REMOVAL OF TEMPORARY OVERLAY SIGN AND DISPOSAL	814 W CARDINAL DIRECTION (NORTH, SOUTH, WEST & EAST) MARKING, TYPE B125	814 RS INTERSTATE ELONGATED ROUTE SHIELD SYMBOL MARKING, TYPE B125
	* QUANTITY DIFFERS FROM STATION RANGE, SEE PLAN																																					
	FROM	TO		EACH	EACH	EACH	EACH	EACH	FT/MI	FT/MI	FT/MI	FT	FT	EACH	FT	FT/MI	FT/MI	FT/MI	FT	FT	FT/MI	FT/MI	FT/MI	FT/MI	FT	FT	FT	FT	FT	FT	FT	FT	SQYD	SQYD	SQYD	FT	FT	EACH	SQFT	EACH	EACH	EACH
	PHASE 1D - STEP 2 (CONT.)																																							
	I-70 WB																																							
239	814+00*	827+30*	LT					264	968	1030	1030	3022																													
	I-70 EB																																							
	814+00*	827+30*	RT					201	2631	876	1030	1520																													
	814+00	819+02	RT		33	11																																		
	I-70 EB TO I-71 NB																																							
239A	1366+00*	994+30*	RT					99		650	650	950																													
	793+40	797+70	LT	1	27	9																													430					
	I-71 SB TO I-70 EB																																							
	SEE PLAN											40																												
	PHASE 1D - STEP 3																																							
	I-71 SB TO I-70 EB																																							
240	213+16	217+00	LT/RT					60		384	384	384																													
	214+20	217+00	RT	1	18	6																													280					
241	217+00	218+52	LT									152																													
	217+00	223+43	LT								643																													
	217+00	228+00	RT							1100																														
	218+52	228+00	LT/RT					8	948																															
	3RD ST TO I-70 EB																																							
	793+05	796+50	RT									345																													
	796+50*	228+00*	RT							705	610																													
242	228+00	230+16	LT					2	216																															
	228+00	233+67	LT/RT							567																														
	233+67	237+49	RT									382																													
	230+16	238+50	LT/RT									834																													
	3RD ST TO I-70 EB																																							
	228+00	238+50	RT							1050	568	382																													
243	238+50*	820+50*	RT							655																														
	238+50	818+53	RT									448																													
	PHASE 1E																																							
	I-71 EB																																							
247	78+24*	861+00*	LT/RT					304		767		767																													
	85+25*	861+00*	LT/RT									132																													
	3RD ST TO I-70 EB																																							
	77+00*	861+00*	RT							909																														
	77+50*	861+00*	RT								843																													
	77+90*	861+00*	RT	1	102	34																													803					
	83+40*	861+00*	RT	1	15	5						500																								250					
	I-71 NB																																							
248	861+00*	771+00*	LT/RT					55		920		1100																													
	91+02	93+95	RT									293																													
	93+95*	771+00*	LT		12	4																													197					
	91+00		LT																																				1
	91+49		LT																																			3	
	92+00		LT																																				1
	92+49		LT																																		1	
	3RD ST TO I-70 EB/18TH ST RAMP																																							
	861+00*	771+00*	RT							1000		1000																													
	861+00*	86+91*	RT									100																													
	86+91*	771+00*	RT								900																													
	861+00*	90+95*	RT	1	39	13						288																								513					
	I-70 EB/I-71 NB																																							
249	771+00*	105+00*	LT/RT		45	15		46		920	485	920																								730					
	97+89	100+13	LT									450																													
	99+72*	100+39*	LT	1	9	3																													87		1			
	18TH ST RAMP																																							
	771+00*	105+80*	RT							1040	872	291																													
	102+04	104+20	RT	1	15	5																													220					
	I-71 NB																																							
250	105+00*	1368+00*	LT/RT					8	880	880	880																													
	106+54	111+36	LT/RT	1	30	10																													482					
	I-71 SB																																							
	986+63*	1368+00*	LT/RT		2	1																													25					
	I-71 NB																																							
251	1368+00	1371+56	LT/RT					3	356	356	356																													
	I-71 SB																																							
	1368+00*	989+70*	LT/RT	1	18	6																													300					
	TOTAL THIS SHEET			9	365	122		1050	5999	13809	9251	14300																								4317	502	1		4	2

CALCULATED JAH
CHECKED JML

MAINTENANCE OF TRAFFIC SUBSUMMARY

FRA-70-14.54

ms consultants, inc.

MAINTENANCE OF TRAFFIC SUBSUMMARY

FRA-70-14.54

SHEET NO.	STATION FROM	STATION TO	SIDE	614 WORK ZONE IMPACT ATTENUATOR (UNIDIRECTIONAL) EACH	614 BARRIER REFLECTOR, TYPE 1 EACH	614 OBJECT MARKER, ONE WAY EACH	614 OBJECT MARKER, TWO WAY EACH	614 WORK ZONE RAISED PAVEMENT MARKER, AS PER PLAN EACH	614 LL WORK ZONE PAVEMENT MARKING, MISC.: LANE LINE, 6" FT/MI	614 WE WORK ZONE PAVEMENT MARKING, MISC.: EDGE LINE, WHITE, 6" FT/MI	614 YE WORK ZONE PAVEMENT MARKING, MISC.: EDGE LINE, YELLOW, 6" FT/MI	614 CH WORK ZONE PAVEMENT MARKING, MISC.: CHANNELIZING LINE, 12" FT	614 WD WORK ZONE PAVEMENT MARKING, MISC.: DOTTED LINE, WHITE, 6" FT	614 A WORK ZONE ARROW, CLASS 1 EACH	614 TR WORK ZONE PAVEMENT MARKING, MISC.: TRANSVERSE LINE, 24" FT	614 LL WORK ZONE LANE LINE, CLASS 1, 6", 642 PAINT FT/MI	614 WE WORK ZONE EDGE LINE, CLASS 1, 6", 642 PAINT, WHITE FT/MI	614 YE WORK ZONE EDGE LINE, CLASS 1, 6", 642 PAINT, YELLOW FT/MI	614 CH WORK ZONE CHANNELIZING LINE, CLASS 1, 12", 642 PAINT FT	614 WD WORK ZONE DOTTED LINE, CLASS 1, 642 PAINT, WHITE FT	614 LL WORK ZONE PAVEMENT MARKING, MISC.: LANE LINE, 5" FT/MI	614 DY WORK ZONE PAVEMENT MARKING, MISC.: CENTER LINE, SOLID DOUBLE, YELLOW, 5" FT/MI	614 WE WORK ZONE PAVEMENT MARKING, MISC.: EDGE LINE, WHITE, 5" FT/MI	614 YE WORK ZONE PAVEMENT MARKING, MISC.: EDGE LINE, YELLOW, 5" FT/MI	614 CH WORK ZONE PAVEMENT MARKING, MISC.: CHANNELIZING LINE, 10" FT	614 WD WORK ZONE PAVEMENT MARKING, MISC.: DOTTED LINE, WHITE, 5" FT	614 DYD WORK ZONE PAVEMENT MARKING, MISC.: DOTTED LINE, DOUBLE YELLOW, 5" FT	614 SL WORK ZONE PAVEMENT MARKING, MISC.: STOP LINE, 20" FT	614 MAINTAINING TRAFFIC, MISC.: PORTABLE WATER FILLED BARRIER PROTECTED PEDESTRIAN WALKWAY FT	614 LONGITUDINAL CHANNELIZER FT	614 SPECIAL - WORK ZONE GUARDRAIL FT	615 PAVEMENT FOR MAINTAINING TRAFFIC, CLASS A SQYD	615 PAVEMENT FOR MAINTAINING TRAFFIC, CLASS A, AS PER PLAN SQYD	615 PAVEMENT FOR MAINTAINING TRAFFIC, CLASS B SQYD	622 PORTABLE BARRIER, 32" FT	622 PORTABLE BARRIER, 50", AS PER PLAN FT	622 PORTABLE BARRIER, "Y" CONNECTOR EACH	630 SIGN, TEMPORARY OVERLAY SQFT	630 REMOVAL OF TEMPORARY OVERLAY SIGN AND DISPOSAL EACH	814 W CARDINAL DIRECTION (NORTH, SOUTH, WEST & EAST) MARKING, TYPE B125 EACH	814 RS INTERSTATE ELONGATED ROUTE SHIELD SYMBOL MARKING, TYPE B125 EACH
	* QUANTITY DIFFERS FROM STATION RANGE, SEE PLAN																																									
	PHASE 2B																																									
	TR-2F																																									
	18TH ST RAMP/3RD ST TO I-70 EB																																									
389	773+91*	1464+50	LT		33	11													742	1056														474			504					
	18TH ST RAMP/3RD ST TO I-70 EB																																									
390	1464+50	1471+83	LT/RT		36	12													369	728	86													1228			550					
	PHASE 2C																																									
	RAMP N1 TO PARSONS																																									
	18TH ST RAMP/3RD ST TO I-70 EB																																									
391	1456+44	1463+50	LT/RT																300	706																						
	1462+60	1463+50	RT	1	6	2																															90					
	TR-2F																																									
392	1463+50*	891+50*	LT/RT																805	805																						
	1463+50*	890+20*	RT		42	14																															680					
	PARSONS AVE																																									
	180+00*	889+27*	LT/RT	1	21		7																															670		320			
	3RD ST TO I-70 EB																																									
393	891+50	895+56	LT/RT																	26	357																					
	18TH ST RAMP																																									
	891+50*	1473+35	LT/RT																187		161																					
	PARSONS AVE																																									
394	179+21	180+00	LT/RT																																	100							
	179+60	180+00	LT/RT		3	1																															40					
	PHASE 3A - STEP 1																																									
	MOOBERRY ST/I-70/Q3																																									
	THIRD ST./FULTON ST.																																									
417B	149+81	153+50	LT/RT												8	538																										
	FULTON ST.																																									
417C	SEE PLAN															97																										
	RAMP N1																																									
	79+51	85+00	RT																549		571	226																				
	RAMP N1																																									
418	962+45*	868+00*	LT/RT																555	555																						
	RAMP N1																																									
419	868+00	876+00	LT/RT																900	900																						
	RAMP N1																																									
420	876+00	883+50	LT/RT																750	750																						
	882+20	883+50	LT	1	8	3																															120					
	RAMP N1																																									
421	883+50	887+37	LT/RT																387	387																12							
	883+50*	891+50*	LT/RT		54	18																															900					
	MOOBERRY ST																																									
	888+00*	891+50	LT/RT																												510	500			150		42						
	PARSONS AVE																																									
	180+00	182+80	LT/RT																													300	250					50					
	180+00	182+21	LT	1	14	5																															221					
	180+00*	888+50*	RT		12	4																															210					
	180+00*	1490+56*	LT/RT																														320									
	MOOBERRY ST																																									
422	891+50*	899+00*	LT/RT																												820	690	25				30					
	TOTAL THIS SHEET			4	229	70	7								8	635			5544	5913	1175	226			1330	1930	1796	532	150		54	180			1702	670		3635					

CALCULATED JAH
CHECKED JML

PLOT.CEL
ms consultants, inc.
msconsultants.com
www.msconsultants.com
Ohio DOT Workspace
70\71 East Interchange 2E
0 0.5" 1"
Batchplot Spec: \\msconsultants.com\files\production\03\60\06634_2E\standards\plotdrv\batchplt.spc
Pen Table: N:\03\60\06634_2E\standards\tables\V8i_ms_std_06634_2D_Plan View_NoClouds.tbl
Plot Driver: \\msconsultants.com\files\Standards\ustn\ohdot\v8i\ms\plotting\PDF.pltcfg
PDF: ohdotV8i
PDF: 60-06634_2E_Columbus
34" x 22"
View: FENCE_VIEW1
By: awhite
Model: Sheet @ 9:56:55 AM
Printed: 2/12/2019
File: N:\03\60\06634_2E\mot\sheets\105229MS006.dgn
ms consultants, inc.

SHEET NO.	STATION FROM	STATION TO	SIDE	614 WORK ZONE IMPACT ATTENUATOR (UNIDIRECTIONAL) EACH	614 BARRIER REFLECTOR, TYPE 1 EACH	614 OBJECT MARKER, ONE WAY EACH	614 OBJECT MARKER, TWO WAY EACH	614 WORK ZONE RAISED PAVEMENT MARKER, AS PER PLAN EACH	614 LL WORK ZONE PAVEMENT MARKING, MISC.: LANE LINE, 6" FT/MI	614 WE WORK ZONE PAVEMENT MARKING, MISC.: EDGE LINE, WHITE, 6" FT/MI	614 YE WORK ZONE PAVEMENT MARKING, MISC.: EDGE LINE, YELLOW, 6" FT/MI	614 CH WORK ZONE PAVEMENT MARKING, MISC.: CHANNELIZING LINE, 12" FT	614 WD WORK ZONE PAVEMENT MARKING, MISC.: DOTTED LINE, WHITE, 6" FT	614 A WORK ZONE ARROW, CLASS I EACH	614 TR WORK ZONE PAVEMENT MARKING, MISC.: TRANSVERSE LINE, 24" FT	614 LL WORK ZONE LANE LINE, CLASS 1, 6", 642 PAINT FT/MI	614 WE WORK ZONE EDGE LINE, CLASS 1, 6", 642 PAINT, WHITE FT/MI	614 YE WORK ZONE EDGE LINE, CLASS 1, 6", 642 PAINT, YELLOW FT/MI	614 CH WORK ZONE CHANNELIZING LINE, CLASS 1, 12", 642 PAINT FT	614 WD WORK ZONE DOTTED LINE, CLASS 1, 642 PAINT, WHITE FT	614 (LL) WORK ZONE PAVEMENT MARKING, MISC.: LANE LINE, 5" FT/MI	614 (DY) WORK ZONE PAVEMENT MARKING, MISC.: CENTER LINE, SOLID DOUBLE, YELLOW, 5" FT/MI	614 (WE) WORK ZONE PAVEMENT MARKING, MISC.: EDGE LINE, WHITE, 5" FT/MI	614 (YE) WORK ZONE PAVEMENT MARKING, MISC.: EDGE LINE, YELLOW, 5" FT/MI	614 (CH) WORK ZONE PAVEMENT MARKING, MISC.: CHANNELIZING LINE, 10" FT	614 (WD) WORK ZONE PAVEMENT MARKING, MISC.: DOTTED LINE, WHITE, 5" FT	614 (DYD) WORK ZONE PAVEMENT MARKING, MISC.: DOTTED LINE, DOUBLE YELLOW, 5" FT	614 (SL) WORK ZONE PAVEMENT MARKING, MISC.: STOP LINE, 20" FT	614 MAINTAINING TRAFFIC, MISC.: PORTABLE WATER FILLED BARRIER PROTECTED PEDESTRIAN WALKWAY FT	614 LONGITUDINAL CHANNELIZER FT	614 SPECIAL - WORK ZONE GUARDRAIL FT	615 PAVEMENT FOR MAINTAINING TRAFFIC, CLASS A SQYD	615 PAVEMENT FOR MAINTAINING TRAFFIC, CLASS A, AS PER PLAN SQYD	615 PAVEMENT FOR MAINTAINING TRAFFIC, CLASS B SQYD	622 PORTABLE BARRIER, 32" FT	622 PORTABLE BARRIER, 50", AS PER PLAN FT	622 PORTABLE BARRIER, "Y" CONNECTOR EACH	630 SIGN, TEMPORARY OVERLAY SQFT	630 REMOVAL OF TEMPORARY OVERLAY SIGN AND DISPOSAL EACH	814 W CARDINAL DIRECTION (NORTH, SOUTH, WEST & EAST) MARKING, TYPE B125 EACH	814 RS INTERSTATE ELONGATED ROUTE SHIELD SYMBOL MARKING, TYPE B125 EACH
	PHASE 3A - STEP 1																																								
	MOOBERRY ST/I-70/Q3																																								
	MOOBERRY ST																																								
423	899+00	904+10	LT		46	16																		515											764						
	900+68	901+55	RT																															76							
	THIRD STREET																																								
423A	156+30																																					128			
	PARSONS AVE																																								
424	179+04*	180+00*	LT/RT	1	6	2																	96	192					50						90						
	PHASE 3A - STEP 2																																								
	MOOBERRY ST/I-70/Q3																																								
425	894+10		RT	1																																					
	PHASE 3A - STEP 3																																								
	MOOBERRY ST/I-70/Q3																																								
	TR-2B																																								
427	218+48	899+00*	RT	1	31	11																													500						
	I-70 EB																																								
428	899+00*	809+00*	LT/RT		60	20																													1000						
	I-70 EB																																								
429	809+00	817+34	RT		51	17																													834						
	PHASE 3A - STEP 4																																								
	MOOBERRY ST/I-70/Q3																																								
	RAMP N1																																								
431	887+02*	888+00*	LT/RT											3			113	115	200																						
	887+00	889+70	LT	2	17		6																												270						
	MOOBERRY ST																																								
	888+00*	891+50*	LT/RT											2								330	1080			152		12													
	PARSONS AVE																																								
	180+00*	183+10*	LT/RT		16	6															104		270					12	50						270						
	MOOBERRY ST																																								
432	891+50	894+53	LT																			303	21																		
	MOOBERRY ST																																								
433	904+10*	53+81*	LT/RT																							120	90	12													
	PARSONS AVE																																								
434	179+05*	179+50*	RT																						90																
	179+50	180+00	RT	1	3	1																													50						
	PHASE 4A - STEP 1																																								
	I-70 EB/RAMP N1																																								
439	84+43	94+03	LT/RT	1	60	20																													960						
	84+43	885+40	LT/RT		156	52																													2563						
	85+11		RT																																			7			
	I-70 EB/I-71 NB																																								
440	769+04	775+64	RT		42	14																													660						
	I-71 NB																																								
441	101+71	104+88	RT	1	21	7																													317						
	I-71 NB																																								
442	782+00*	108+80*	LT/RT					2								170	180																								
	TOTAL THIS SHEET			8	509	166	6	2						5		170	293	115	200		104	633	1467	707	90	272	90	36	100					76	8278			135			

* QUANTITY DIFFERS FROM STATION RANGE, SEE PLAN

CALCULATED JAH
CHECKED JML

MAINTENANCE OF TRAFFIC SUBSUMMARY

FRA-70-14.54

PLOT.CEL
ms consultants, inc.
msconsultants.com
www.msconsultants.com
Ohio DOT Workspace
70\71 East Interchange 2E
UCF: ohdotV8i
PCF: 60-06634_2E_Columbus
Batchplot Spec: \\msconsultants.com\files\production\03\60\06634_2E\standards\plotdrv\batchplt.spc
Pen Table: N:\03\60\06634_2E\standards\tables\V8i_ms_std_06634_2D_Plan View_NoClouds.tbl
Plot Driver: \\msconsultants.com\files\Standards\ustn\ohdot\v8i\ms\plotting\PDF.pltcfg
34" x 22"
Model: Sheet
Printed: 1/17/2019 @ 1:19:40 PM
View: FENCE_VIEW1
By: awhite
File: \\msconsultants.com\files\Production\03\60\06634_2E\mot\sheets\105322MS007.dgn
ms consultants, inc.

PLOT.CEL
ms consultants, inc.
msconsultants.com
Ohio DOT Workspace
70\71 East Interchange 2E
www.msconsultants.com
1"
0.5"
0
Batchplot Spec: \\msconsultants.com\files\production\03\60\06634_2E\standards\plotdrv\batchplt.spc
Pen Table: N:\03\60\06634_2E\standards\tables\V8i_ms_std_06634_2D_Plan View_NoClouds.tbl
Plot Driver: \\msconsultants.com\files\Standards\ustn\ohdot\v8i\ms\plotting\PDF.pltcfg
Model: Sheet
Printed: 1/17/2019 @ 1:23:42 PM
File: \\msconsultants.com\files\Production\03\60\06634_2E\mot\sheets\105322MS0008.dgn
34" x 22"
View: FENCE_VIEW1
By: awhite
OPS: ohdot\v8i
WF: 60-06634_2E_Columbus

SHEET NO.	STATION FROM	STATION TO	SIDE	614 WORK ZONE IMPACT ATTENUATOR (UNIDIRECTIONAL) EACH	614 BARRIER REFLECTOR, TYPE 1 EACH	614 OBJECT MARKER, ONE WAY EACH	614 OBJECT MARKER, TWO WAY EACH	614 WORK ZONE RAISED PAVEMENT MARKER, AS PER PLAN EACH	614 LL WORK ZONE PAVEMENT MARKING, MISC.: LANE LINE, 6" FT/MI	614 WE WORK ZONE PAVEMENT MARKING, MISC.: EDGE LINE, WHITE, 6" FT/MI	614 YE WORK ZONE PAVEMENT MARKING, MISC.: EDGE LINE, YELLOW, 6" FT/MI	614 CH WORK ZONE PAVEMENT MARKING, MISC.: CHANNELIZING LINE, 12" FT	614 WD WORK ZONE PAVEMENT MARKING, MISC.: DOTTED LINE, WHITE, 6" FT	614 A WORK ZONE ARROW, CLASS 1 EACH	614 TR WORK ZONE PAVEMENT MARKING, MISC.: TRANSVERSE LINE, 24" FT	614 LL WORK ZONE LANE LINE, CLASS 1, 6", 642 PAINT FT/MI	614 WE WORK ZONE EDGE LINE, CLASS 1, 6", 642 PAINT, WHITE FT/MI	614 YE WORK ZONE EDGE LINE, CLASS 1, 6", 642 PAINT, YELLOW FT/MI	614 CH WORK ZONE CHANNELIZING LINE, CLASS 1, 12", 642 PAINT FT	614 WD WORK ZONE DOTTED LINE, CLASS 1, 642 PAINT, WHITE FT	614 LL WORK ZONE PAVEMENT MARKING, MISC.: LANE LINE, 5" FT/MI	614 DY WORK ZONE PAVEMENT MARKING, MISC.: CENTER LINE, SOLID DOUBLE, YELLOW, 5" FT/MI	614 WE WORK ZONE PAVEMENT MARKING, MISC.: EDGE LINE, WHITE, 5" FT/MI	614 YE WORK ZONE PAVEMENT MARKING, MISC.: EDGE LINE, YELLOW, 5" FT/MI	614 CH WORK ZONE PAVEMENT MARKING, MISC.: CHANNELIZING LINE, 10" FT	614 WD WORK ZONE PAVEMENT MARKING, MISC.: DOTTED LINE, WHITE, 5" FT	614 DYD WORK ZONE PAVEMENT MARKING, MISC.: DOTTED LINE, DOUBLE YELLOW, 5" FT	614 SL WORK ZONE PAVEMENT MARKING, MISC.: STOP LINE, 20" FT	614 MAINTAINING TRAFFIC, MISC.: PORTABLE WATER FILLED BARRIER PROTECTED PEDESTRIAN WALKWAY FT	614 LONGITUDINAL CHANNELIZER FT	614 SPECIAL - WORK ZONE GUARDRAIL	615 PAVEMENT FOR MAINTAINING TRAFFIC, CLASS A SQYD	615 PAVEMENT FOR MAINTAINING TRAFFIC, CLASS A, AS PER PLAN SQYD	615 PAVEMENT FOR MAINTAINING TRAFFIC, CLASS B SQYD	622 PORTABLE BARRIER, 32" FT	622 PORTABLE BARRIER, 50", AS PER PLAN FT	622 PORTABLE BARRIER, "Y" CONNECTOR EACH	630 SIGN, TEMPORARY OVERLAY SQFT	630 REMOVAL OF TEMPORARY OVERLAY SIGN AND DISPOSAL EACH	814 W CARDINAL DIRECTION (NORTH, SOUTH, WEST & EAST) MARKING, TYPE B125 EACH	814 RS INTERSTATE ELONGATED ROUTE SHIELD SYMBOL MARKING, TYPE B125 EACH
	* QUANTITY DIFFERS FROM STATION RANGE, SEE PLAN																																							
	PHASE 4A - STEP 2																																							
	I-70 EB/RAMP N2																																							
	I-70 EB TO I-71 NB																																							
444	76+50	84+30	RT					44													880																			
	76+50	83+00	RT					38													750																			
	78+00	86+50	RT																850																					
	80+97	83+90	RT																		290																			
	80+97	84+30	RT																		335																			
	84+30	99+18	RT																1488																					
	82+90*	86+05*	LT/RT	1	38	13																															630				
	83+00	86+50	RT															350																							
	83+90	86+50	RT																	260																					
445	86+50*	772+00*	RT					9									1040	1020	1040	60	200																			
446	772+00*	782+00	RT					9									1020	1020	1020																					
447	782+00*	694+18*															1220	1220	1220																					
	PHASE 4A - STEP 3																																							
	I-70 EB/RAMP N2																																							
	I-70 EB																																							
449	78+31*	86+50*	RT	1	45	15		42											830																		725				
	79+50	83+56	RT					21												406																					
450	86+50*	772+00*	LT/RT																1040																					
	90+43*	772+00*	LT/RT														650																							
	92+52*	772+00*	LT/RT	1	27	9																															436				
	94+63*	772+00*	LT/RT																	230																					
451	772+00	782+00	RT		60	20		9									1000	920	1000	80																	1000				
452	782+00	792+00	RT		6	2		9									1000	388	1000	612																	95				
453	792+00	802+50	RT					8									950		1050	1022	128																			
	I-71 SB TO I-70 EB																																							
	220+69*	802+50*	LT/RT					6									622	622	622																					
	I-70 EB																																							
454	802+50	813+00	RT					159										1050	1050	1050	595																			
	I-71 SB TO I-70 EB																																							
	802+50	813+00	LT					114									323	1050	1050	727																					
	I-70 EB																																							
455	813+00*	821+75*	RT					59									526	875	430	694																					
	I-71 SB TO I-70 EB																																							
	813+00	821+75*	RT					79									379	430	875	841																					
	PHASE 4A - STEP 3																																							
	I-70 WB/RAMP N4																																							
458	78+90*	86+50*	RT					13									1520	587	760	224	587																		3	3
	81+24			1																																			
	I-70 EB/I-71 NB																																							
459	86+50*	91+90*	RT					9									1080	290	540	250																					
	862+30	863+00	LT		4	1																														70				
	RAMP N1																																							
	86+50*	93+55*	RT															705	455	250																					
	PHASE 4B - STEP 1																																							
	FULTON ST																																							
460B	35+50*	36+17*	LT/RT																			159																		
	PHASE 4B - STEP 2																																							
	FULTON ST.																																							
460C	25+40*	31+00*	LT/RT												1																									
	31+00	32+00	LT/RT																																100					
	3RD ST																																							
	0+00*	120+00	LT/RT																															100						
	156+30		LT/RT																																			6			
	TOTAL THIS SHEET			4	180	60		628							1		11680	12515	14242	8701	1510			159			100					100				2956		6		3	3

CALCULATED JAH
CHECKED JML

MAINTENANCE OF TRAFFIC SUBSUMMARY

FRA-70-14.54

ms consultants, inc.

PLOT.CEL

ms consultants, inc.
msconsultants.com

Ohio DOT Workspace
70\71 East Interchange 2E
www.msconsultants.com

1" 0 0.5"

Batchplot Spec: \\msconsultants.com\files\production\03\60\06634_2E\standards\plotdrv\batchplt.spc DGN: ohdot\V8i
Pen Table: N:\03\60\06634_2E\standards\tables\V8i_ms_std_06634_2D_Plan View_NoClouds.tbl PRF: 60-06634_2E_Columbus
Plot Driver: \\msconsultants.com\files\Standards\ustn\ohdot\v8i\ms\plotting\PDF.pltcfg

Model: Sheet
Printed: 1/17/2019 @ 1:30:09 PM
File: \\msconsultants.com\files\Production\03\60\06634_2E\mot\sheets\105322MS0009.dgn

34" x 22"

View: FENCE_VIEW1
By: awhite

SHEET NO.	STATION FROM	STATION TO	SIDE	614 WORK ZONE IMPACT ATTENUATOR (UNIDIRECTIONAL) EACH	614 BARRIER REFLECTOR, TYPE 1 EACH	614 OBJECT MARKER, ONE WAY EACH	614 OBJECT MARKER, TWO WAY EACH	614 WORK ZONE RAISED PAVEMENT MARKER, AS PER PLAN EACH	614 LL WORK ZONE PAVEMENT MARKING, MISC.: LANE LINE, 6" FT/MI	614 WE WORK ZONE PAVEMENT MARKING, MISC.: EDGE LINE, WHITE, 6" FT/MI	614 YE WORK ZONE PAVEMENT MARKING, MISC.: EDGE LINE, YELLOW, 6" FT/MI	614 CH WORK ZONE PAVEMENT MARKING, MISC.: CHANNELIZING LINE, 12" FT	614 WD WORK ZONE PAVEMENT MARKING, MISC.: DOTTED LINE, WHITE, 6" FT	614 A WORK ZONE ARROW, CLASS 1 EACH	614 TR WORK ZONE PAVEMENT MARKING, MISC.: TRANSVERSE LINE, 24" FT	614 LL WORK ZONE LANE LINE, CLASS 1, 6", 642 PAINT FT/MI	614 WE WORK ZONE EDGE LINE, CLASS 1, 6", 642 PAINT, WHITE FT/MI	614 YE WORK ZONE EDGE LINE, CLASS 1, 6", 642 PAINT, YELLOW FT/MI	614 CH WORK ZONE CHANNELIZING LINE, CLASS 1, 12", 642 PAINT FT	614 WD WORK ZONE DOTTED LINE, CLASS 1, 642 PAINT, WHITE FT	614 LL WORK ZONE PAVEMENT MARKING, MISC.: LANE LINE, 5" FT/MI	614 DY WORK ZONE PAVEMENT MARKING, MISC.: CENTER LINE, SOLID DOUBLE, YELLOW, 5" FT/MI	614 WE WORK ZONE PAVEMENT MARKING, MISC.: EDGE LINE, WHITE, 5" FT/MI	614 YE WORK ZONE PAVEMENT MARKING, MISC.: EDGE LINE, YELLOW, 5" FT	614 CH WORK ZONE PAVEMENT MARKING, MISC.: CHANNELIZING LINE, 10" FT	614 WD WORK ZONE PAVEMENT MARKING, MISC.: DOTTED LINE, WHITE, 5" FT	614 DYD WORK ZONE PAVEMENT MARKING, MISC.: DOTTED LINE, DOUBLE YELLOW, 5" FT	614 SL WORK ZONE PAVEMENT MARKING, MISC.: STOP LINE, 20" FT	614 MAINTAINING TRAFFIC, MISC.: PORTABLE WATER FILLED BARRIER PROTECTED PEDESTRIAN WALKWAY FT	614 LONGITUDINAL CHANNELIZER FT	614 SPECIAL - WORK ZONE GUARDRAIL FT	615 PAVEMENT FOR MAINTAINING TRAFFIC, CLASS A SQYD	615 PAVEMENT FOR MAINTAINING TRAFFIC, CLASS A, AS PER PLAN SQYD	615 PAVEMENT FOR MAINTAINING TRAFFIC, CLASS B SQYD	622 PORTABLE BARRIER, 32" FT	622 PORTABLE BARRIER, 50", AS PER PLAN FT	622 PORTABLE BARRIER, "Y" CONNECTOR EACH	630 SIGN, TEMPORARY OVERLAY SQFT	630 REMOVAL OF TEMPORARY OVERLAY SIGN AND DISPOSAL EACH	814 W CARDINAL DIRECTION (NORTH, SOUTH, WEST & EAST) MARKING, TYPE B125 EACH	814 RS INTERSTATE ELONGATED ROUTE SHIELD SYMBOL MARKING, TYPE B125 EACH
	PHASE 4B - STEP 2 (CONT.)																																									
460D	LIVINGSTON AVE		LT/RT																											200												
460E	LIVINGSTON AVE		LT/RT											2														295	40													
460F	LIVINGSTON AVE		LT/RT																									50	60													
	I-71 SB TO I-70 EB																																									
464	219+15	223+54	LT	1	27	9																												673			439					
	I-70 WB TO I-71 NB																																	223								
	801+18*	903+55*	LT/RT																																							
	PHASE 5 - STEP 1																																									
	PARTIAL TRANS. I-71 SB																																									
	TRANS. I-71 SB																																									
478	215+00	221+00	LT/RT																								600														
	217+30	221+00	RT	1	24	8																												370								
	218+00	221+00	LT/RT															300	300																							
	220+82	221+00	LT	1	3	1																															18					
	I-70 WB																																									
	116+90*	221+00*	LT/RT															550	550																							
	MOUND ST. EXIT																																									
	795+95*	221+00*	LT/RT															80	80																							
	I-71 NB																																									
	891+76*	221+00*	LT/RT					4									480	480	480																							
	TRANS. I-71 SB																																									
479	221+00*	807+50*	LT/RT	1	132	44		117									333	1080	1080	747																			1080	1080			
	I-70 WB																																									
	221+00*	807+50*	LT/RT															1080	1080																							
	MOUND ST. EXIT																																									
	221+00*	807+50*	LT/RT															560	1100	230																						
	I-71 NB																																									
	221+00*	807+50*	LT/RT					9									1080	1080	550	540																							
	I-70 EB																																									
480	812+12	814+30	RT	1	15	5																																	220				
	TRANS. I-71 SB																																									
	807+50*	244+00*	LT/RT		117	39		9									1080	1080	1080																					810	512		
	I-71 NB/I-70 WB/RAMP P2																																									
	807+50*	814+62*	LT/RT					15									1731	712	508	405																							
	TRANS. I-71 SB																																									
481	244+00*	820+41*	RT					2									223		123	223																							
	PHASE 5 - STEP 2																																									
	PARTIAL TRANS. I-71 SB																																									
	I-70 WB																																									
482	115+20*	221+00*	LT/RT		30	10												715	765																					487				
	RAMP P2																																									
	889+15*	221+10*	LT/RT															740	740		262																					
	TRANS. I-71 SB																																									
483	223+00*	807+50*	LT/RT					34									723	893	893	170																							
	I-70 WB																																									
	221+00*	807+50*	LT	1	66	22												420	420																					1100				
	RAMP P2																																									
	221+00*	799+71*	LT/RT															306	306																							
	I-70 EB																																									
	804+50	807+50	RT					30											300	300	300																						
	I-71 SB																																									
484	807+50*	818+20*	LT/RT					147									93	109	1070	1940																							
	234+96*	244+00*	LT/RT		48	16																																	770				
	I-71 NB/I-70 WB/RAMP P2																																									
	908+68*	244+00*	LT/RT		69	23		173									2010	595	950	293																					1100				
	I-70 EB																																									
	807+50*	244+00*	RT					200									92	1020	107	1560	57																						
	I-70 EB																																									
485	818+20*	821+68*	RT		9	3												700	350	350	350																			120				
	I-71 NB/I-70 WB/RAMP P2																																									
	818+20	819+71	LT	1	9	3													151																					110				
	TOTAL THIS SHEET			7	549	183		740						2			8545	12150	12983	7358	619				345	100			200			896			6606	1610					

CALCULATED JAH
CHECKED JML

MAINTENANCE OF TRAFFIC SUBSUMMARY

FRA-70-14.54

ms consultants, inc.

PLOT.CEL
ms consultants, inc.
msconsultants.com
www.msconsultants.com
Ohio DOT Workspace
70\71 East Interchange 2E
0 0.5" 1"
Batchplot Spec: \\msconsultants.com\files\production\Q3\60\06634_2E\standards\plotdrv\batchplt.spc
Pen Table: N:\03\60\06634_2E\standards\tables\V8i_ms_std_06634_2D_Plan View_NoClouds.tbl
Plot Driver: \\msconsultants.com\files\Standards\ustn\ohdot\v8i\ms\plotting\PDF.pltcfg
Model: Sheet
Printed: 2/12/2019 @ 9:56:56 AM
File: N:\03\60\06634_2E\mot\sheets\105229MS015.dgn
View: FENCE_VIEW1
By: dwhite
34" x 22"

SHEET NO.	STATION		SIDE	614	614	614	614	614	614 LL	614 WE	614 YE	614 CH	614 WD	614 A	614 TR	614 LL	614 WE	614 YE	614 CH	614 WD	614 LL	614 DY	614 WE	614 YE	614 CH	614 WD	614 DYD	614 SL	614	614	614	615	615	615	622	622	622	630	630	814 W	814 RS
	* QUANTITY DIFFERS FROM STATION RANGE, SEE PLAN			WORK ZONE IMPACT ATTENUATOR (UNIDIRECTIONAL)	BARRIER REFLECTOR, TYPE 1	OBJECT MARKER, ONE WAY	OBJECT MARKER, TWO WAY	WORK ZONE RAISED PAVEMENT MARKER, AS PER PLAN	WORK ZONE PAVEMENT MARKING, MISC.: LANE LINE, 6"	WORK ZONE PAVEMENT MARKING, MISC.: EDGE LINE, WHITE, 6"	WORK ZONE PAVEMENT MARKING, MISC.: EDGE LINE, YELLOW, 6"	WORK ZONE PAVEMENT MARKING, MISC.: CHANNELIZING LINE, 12"	WORK ZONE PAVEMENT MARKING, MISC.: DOTTED LINE, WHITE, 6"	WORK ZONE ARROW, CLASS I	WORK ZONE PAVEMENT MARKING, MISC.: TRANSVERSE LINE, 24"	WORK ZONE LANE LINE, CLASS I, 6", 642 PAINT	WORK ZONE EDGE LINE, CLASS I, 6", 642 PAINT, WHITE	WORK ZONE EDGE LINE, CLASS I, 6", 642 PAINT, YELLOW	WORK ZONE CHANNELIZING LINE, CLASS I, 12", 642 PAINT	WORK ZONE DOTTED LINE, CLASS I, 642 PAINT, WHITE	WORK ZONE PAVEMENT MARKING, MISC.: LANE LINE, 5"	WORK ZONE PAVEMENT MARKING, MISC.: CENTER LINE, SOLID DOUBLE, YELLOW, 5"	WORK ZONE PAVEMENT MARKING, MISC.: EDGE LINE, WHITE, 5"	WORK ZONE PAVEMENT MARKING, MISC.: EDGE LINE, YELLOW, 5"	WORK ZONE PAVEMENT MARKING, MISC.: CHANNELIZING LINE, 10"	WORK ZONE PAVEMENT MARKING, MISC.: DOTTED LINE, WHITE, 5"	WORK ZONE PAVEMENT MARKING, MISC.: DOTTED LINE, DOUBLE YELLOW, 5"	WORK ZONE PAVEMENT MARKING, MISC.: STOP LINE, 20"	MAINTAINING TRAFFIC, MISC.: PORTABLE WATER FILLED BARRIER PROTECTED PEDESTRIAN WALKWAY	LONGITUDINAL CHANNELIZER	SPECIAL - WORK ZONE GUARDRAIL	PAVEMENT FOR MAINTAINING TRAFFIC, CLASS A	PAVEMENT FOR MAINTAINING TRAFFIC, CLASS A, AS PER PLAN	PAVEMENT FOR MAINTAINING TRAFFIC, CLASS B	PORTABLE BARRIER, 32"	PORTABLE BARRIER, 50", AS PER PLAN	PORTABLE BARRIER, "Y" CONNECTOR	SIGN, TEMPORARY OVERLAY	REMOVAL OF TEMPORARY OVERLAY SIGN AND DISPOSAL	CARDINAL DIRECTION (NORTH, SOUTH, WEST & EAST) MARKING, TYPE B125	INTERSTATE ELONGATED ROUTE SHIELD SYMBOL MARKING, TYPE B125
FROM	TO		EACH	EACH	EACH	EACH	EACH	FT/MI	FT/MI	FT/MI	FT	FT	EACH	FT	FT/MI	FT/MI	FT/MI	FT	FT	FT/MI	FT/MI	FT/MI	FT/MI	FT/MI	FT	FT	FT	FT	FT	FT	SQYD	SQYD	SQYD	FT	FT	EACH	SQFT	EACH	EACH	EACH
PHASE 5 - STEP 3																																							
PARTIAL I-71 SB																																							
I-70 WB																																							
486	115+60*	122+40	RT		30	10											492	680		190															492					
RAMP P2																																							
	791+77	796+68	RT		30	10																													491					
	792+42	795+52	RT																												206								
I-70 WB																																							
487	796+75	807+50	LT/RT	1	129	43											1075	1075																	2100					
I-70 WB																																							
488	807+50*	818+25*	LT	1	78	26											614	1693	926																1280		1			
I-70 WB																																							
489	244+00*	245+50*	LT																300																					
PHASE 5 - STEP 4																																							
PARTIAL MOUND ST RAMP																																							
MOUND ST RAMP/I-70 WB																																							
490	890+00*	221+00*	LT/RT	1	30	10											670	790	360																460					
MOUND ST RAMP/I-70 WB																																							
491	222+36	229+40*	LT/RT	1	39	13		4								400	710	710	450																640					
FINAL REMOVAL OH SIGN OVERLAYS																																					20		
TOTAL THIS SHEET				4	336	112		4								400	3561	4948	2036	190											206			5463		1		20		
TOTAL SHEET 113				7	401	137		777		10336	7331	13865	460																1700		1161			6378			817	14		
TOTAL SHEET 114				7	320	109		497	3732	9807	12804	12744			219																10023		4007	2068					
TOTAL SHEET 115				8	437	146		1008	13106	10206	9811	14285			209															159	1494	2816		4722	2512	1	90			
TOTAL SHEET 116				4	501	167		1314	2300	12973	12324	16365	793																					1904	5140		1354	2	4	4
TOTAL SHEET 117				9	365	122		1050	5999	13809	9251	14300																						4317	502	1			4	2
TOTAL SHEET 118				4	229	70	7							8	635		5544	5913	1175	226		1330	1930	1796	532	150		54	180			1702	670		3635					
TOTAL SHEET 119				8	509	166	6	2						5		170	293	115	200		104	633	1467	707	90	272	90	36	100					76	8278			135			
TOTAL SHEET 120				4	180	60		628						1		11680	12515	14242	8701	1510			159			100			100					2956			6		3	3
TOTAL SHEET 121				7	549	183		740						2		8545	12150	12983	7358	619					345	100			200			896			6606	1610					
GRAND TOTAL				62	3827	1272	13	6020	25137	57131	51521	71559	1253	16	1063	20795	34063	38201	19470	2545	104	1963	3556	2503	967	622	90	90	580	1700	159	5459	13509	76	48266	11832	3	2402	36	11	9
TOTAL (FT)									25137	108652						20795	72264				104	1963	6059			712														
TOTAL (MI)									4.76	20.58						3.94	13.69				0.02	0.37	1.15																	
TOTAL CARRIED TO GENERAL SUMMARY				62	3827	1272	13	6020	4.76	20.58		71559	1253	16	1063	3.94	13.69		19470	2545	0.02	0.37	1.15		967	712		90	580	1700	159	5459	13509	76	48266	11832	3	2402	36	11	9

MAINTENANCE OF TRAFFIC SUBSUMMARY

CALCULATED JAH
CHECKED JML

FRA-70-14.54

ms consultants, inc.

PLOT.CEL

ms consultants, inc.
msconsultants.com

www.msconsultants.com

Ohio DOT Workspace
70\71 East Interchange 2E

REF. NO.	SHEET NO.	STATION FROM	STATION TO	SIDE	611 6" CONDUIT, TYPE B (FT)	611 12" CONDUIT, TYPE B (FT)	611 12" CONDUIT, TYPE C (FT)	611 15" CONDUIT, TYPE B (FT)	611 15" CONDUIT, TYPE C (FT)	611 21" CONDUIT, TYPE B (FT)	611 36" CONDUIT, TYPE B (FT)	611 60" CONDUIT, TYPE C (FT)	611 22" X 34" CONDUIT, TYPE B, 706.04 (FT)	611 CATCH BASIN, NO. 8 (EACH)	611 CATCH BASIN, NO. 2-2B (EACH)	611 INLET, NO. 3 FOR SINGLE SLOPE BARRIER, TYPE B (EACH)	611 MANHOLE, NO. 3 (EACH)	611 MANHOLE, NO. 3, AS PER PLAN (EACH)	611 MANHOLE ADJUSTED TO GRADE (EACH)	611 MANHOLE RECONSTRUCTED TO GRADE (EACH)	836 SEEDING AND EROSION CONTROL WITH TURF REINFORCING MAT, TYPE 1 (SQ YD)	839 TRENCH DRAIN WITH STANDARD GRATE (FT)	202 PIPE REMOVED, 24" AND UNDER (FT)	202 PIPE REMOVED, OVER 24" (FT)	202 MANHOLE REMOVED (EACH)	202 CATCH BASIN REMOVED (EACH)	202 INLET ABANDONED (EACH)	202 CATCH BASIN ABANDONED (EACH)	202 MANHOLE ABANDONED (EACH)	202 REMOVAL MISC.: TRENCH DRAIN WITH STANDARD GRATE (FT)
		PHASE 1																												
		TR-1B																												
D1	311	50+43.87		RT					6					1																
		PHASE 1C																												
D2	228A	906+54.04	906+78.04	RT							27						1													
		TR-1D																												
D3	256	1108+59.31		LT																							1			
		TR-2A																												
D4	281	1238+38.25		LT		8									1															
		PHASE 5 - STEP 3																												
R2	487	906+54.04	906+78.04	RT																				27	1					
		PHASE 4B - STEP 1																												
R1	459	50+43.87		RT																			6			1				
		PHASE 5 - STEP 2																												
R4	485	1238+38.25		LT																			8			1				
TOTALS CARRIED TO SHEET 178						**8**			**6**		**27**			**1**	**1**		**1**						**14**	**27**	**1**	**2**	**1**			

CALCULATED SSR
CHECKED BSB

MAINTENANCE OF TRAFFIC DRAINAGE SUBSUMMARY

FRA-70-14.54

ms consultants, inc.

UCF: ohdotV8i
PCF: 60-06634_2E_Columbus
Batchplot Spec: \\msconsultants.com\files\production\03\60\06634_2E\standards\plotdrv\batchplt.spc
Pen Table: N:\03\60\06634_2E\standards\tables\V8i_ms_std_NoClouds.tbl
Plot Driver: \\msconsultants.com\files\Standards\ustn\ohdot\v8i\ms\plotting\PDF.pltcfg
34" x 22"
Model: Sheet View: FENCE_VIEW1
Printed: 2/12/2019 @ 9:57:03 AM By: awhite
File: \\msconsultants.com\files\Production\03\60\06634_2E\mot\sheets\105322MS101.dgn

PLOT.CEL

ms consultants, inc.
msconsultants.com

www.msconsultants.com
70\71 East Interchange 2E
Ohio DOT Workspace

PCF: 60-066.34_2E_Columbus
CDF: ohdot\V8i

Batchplot Spec: \\msconsultants.com\files\Production\03\60\066.34_2E\standards\plotdrv\batchplt.spc
Pen Table: N:\03\60\066.34_2E\standards\tables\V8i_ms_std_NoClouds.tbl
Plot Driver: \\msconsultants.com\files\Standards\usetn\ohdot\v8i\ms\plotting\PDF.pltcfg

Model: Sheet @ 12:36:00 PM View: FENCE_VIEW1
Printed: 2/12/2019 By: hbrendinger
File: \\msconsultants.com\files\Production\03\60\066.34_2E\mot\sheets\105322MS102.dgn

34" x 22"

REF. NO.	SHEET NO.	STATION FROM	STATION TO	SIDE	611 6" CONDUIT, TYPE B FT	611 12" CONDUIT, TYPE B FT	611 12" CONDUIT, TYPE C FT	611 15" CONDUIT, TYPE B FT	611 15" CONDUIT, TYPE C FT	611 21" CONDUIT, TYPE B FT	611 36" CONDUIT, TYPE B FT	611 60" CONDUIT, TYPE C FT	611 22" X 34" CONDUIT, TYPE B, 706.04 FT	611 CATCH BASIN, NO. 8 EACH	611 CATCH BASIN, NO. 2-2B EACH	611 INLET, NO. 3 FOR SINGLE SLOPE BARRIER, TYPE B EACH	611 MANHOLE, NO. 3 EACH	611 MANHOLE, NO. 3, AS PER PLAN EACH	611 MANHOLE ADJUSTED TO GRADE EACH	611 MANHOLE RECONSTRUCTED TO GRADE EACH	836 SEEDING AND EROSION CONTROL WITH TURF REINFORCING MAT, TYPE 1 SQ YD	839 TRENCH DRAIN WITH STANDARD GRATE FT	202 PIPE REMOVED, 24" AND UNDER FT	202 PIPE REMOVED, OVER 24" FT	202 MANHOLE REMOVED EACH	202 CATCH BASIN REMOVED EACH	202 INLET ABANDONED EACH	202 CATCH BASIN ABANDONED EACH	202 MANHOLE ABANDONED EACH	202 REMOVAL MISC.: TRENCH DRAIN WITH STANDARD GRATE FT
		PHASE 2																												
		PHASE 2C																												
D0	394A	181+20.70	182+38.76	LT		118																								
		TR-2F																												
D1	401	1467+34.96		LT				23						1									23			1				
D2	401	1467+34.96		RT																								1		
		TR-2G																												
D3	396	1488+63.53		LT				20						1												1				
D4	396	1488+67.20		LT																								1		
D5	396	1488+70.54		RT				20						1												1				
		PHASE 3A																												
R0	421	181+20.70	182+37.76	LT																			118							
R1	421	1467+34.96		LT																			23			1				
R3	421	1488+63.53		LT																			20			1				
R5	421	1488+70.54		RT																			20			1				
		TOTAL SHEET 123				8			6		27			1	1		1						14	27	1	2	1			
TOTALS CARRIED TO GENERAL SUMMARY						**126**		**63**	**6**		**27**			**4**	**1**		**1**						**218**	**27**	**1**	**8**	**1**	**2**		

CALCULATED SSR
CHECKED BSB

FRA-70-14.54

MAINTENANCE OF TRAFFIC DRAINAGE SUBSUMMARY

ms consultants, inc.

REF. NO.	SHEET NO.	STATION FROM	STATION TO	SIDE	203 EXCAVATION YD	203 EMBANKMENT YD	441 ASPHALT CONCRETE SURFACE COURSE, TYPE 1 (448), AS PER PLAN CY	441 ASPHALT CONCRETE INTERMEDIATE COURSE, TYPE 2 (448), AS PER PLAN CY	302 ASPHALT CONCRETE BASE, AS PER PLAN CY	407 NON-TRACKING TACK COAT GAL	AGGREGATE BASE, AS PER PLAN CY
	221	768+00	778+26	LT/RT	390	186	142	316	239	1123	248
TOTALS CARRIED TO GENERAL SUMMARY					390	186	142	316	239	1123	248

CALCULATED ACW
CHECKED HRB

MAINTENANCE OF TRAFFIC PAVEMENT SUBSUMMARY

FRA-70-14.54

PLOT.CEL
ms consultants, inc.
msconsultants.com
Ohio DOT Workspace
70\71 East Interchange 2E
www.msconsultants.com
Batchplot Spec: \\msconsultants.com\files\production\03\60\06634_2E\standards\plotdrv\batchplt.spc
Pen Table: N:\03\60\06634_2E\standards\tables\V8i_ms_std_with_cloudsInColor.tbl
Plot Driver: \\msconsultants.com\files\Standards\ustn\ohdot\v8i\ms\plotting\PDF.pltcfg
UCF: ohdotV8i
PCF: 60-06634_2E_Columbus
34" x 22"
View: FENCE_VIEW1
By: hbrendlinger
Model: Sheet
Printed: 2/12/2019 @ 2:18:35 PM
File: \\msconsultants.com\files\Production\03\60\06634_2E\mot\sheets\105322MS104.dgn
ms consultants, inc.

PLOT.CEL

ms consultants, inc.
msconsultants.com

www.msconsultants.com

Ohio DOT Workspace
70\71 East Interchange 2E

0 1" 0.5"

Batchplot Spec: \\msconsultants.com\files\production\03\60\06634_2E\standards\plotdrv\batchplt.spc
Pen Table: \\msconsultants.com\files\Standards\ustn\ohdot\V8i\ms\plotting\pen\V8i_ms_std.tbl DGN: ohdot\V8i
Plot Driver: \\msconsultants.com\files\Standards\ustn\ohdot\v8i\ms\plotting\PDF.pltcfg DCF: 60-06634_2E_Columbus

Model: Sheet View: FENCE_VIEW1
Printed: 9/28/2018 @ 10:07:04 AM By: kryan
File: N:\03\60\06634_2E\mot\sheets\05322MM0001.dgn

34" x 22"

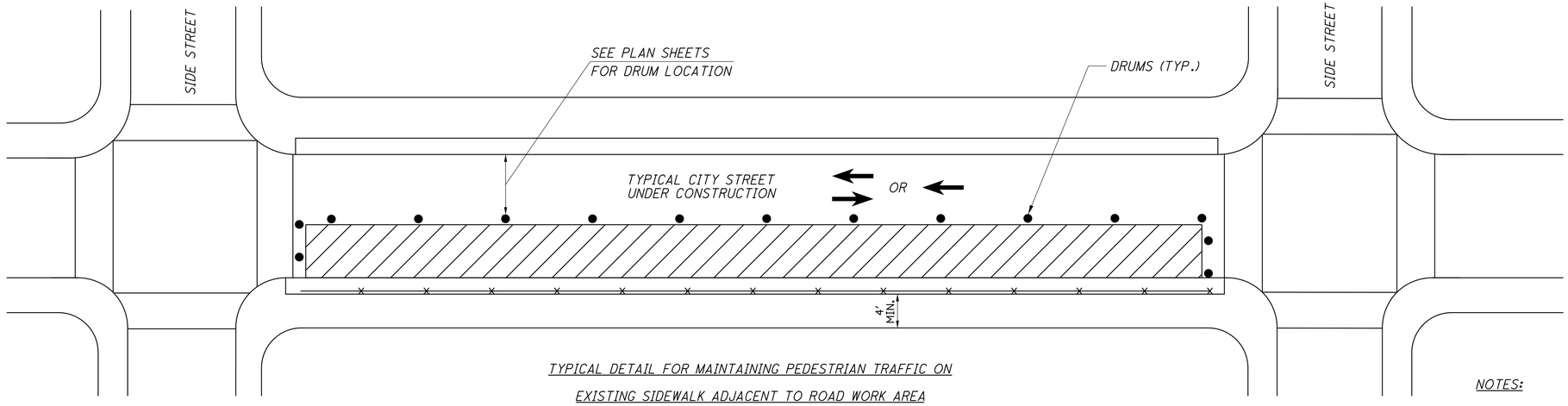

TYPICAL DETAIL FOR MAINTAINING PEDESTRIAN TRAFFIC ON

EXISTING SIDEWALK ADJACENT TO ROAD WORK AREA

NOT TO SCALE

NOTES:

1. ACCESS TO PROPERTIES WITHIN THE WORK AREA SHALL BE MAINTAINED AT ALL TIMES. SEE "PEDESTRIAN PATHWAY PROVISION AND MAINTENANCE" NOTE ON SHEET 139 FOR MORE INFORMATION REGARDING PEDESTRIAN ACCESS TO PROPERTIES WITHIN THE WORK AREA.

2. IN WORK AREAS WHERE NO PEDESTRIAN ACCESS TO PROPERTIES IS REQUIRED, THE CONTRACTOR MAY CONSTRUCT THE ROADWAY AND SIDEWALK SIMULTANEOUSLY.

3. THE INTERSECTION CORNERS SHALL BE CONSTRUCTED SEPARATELY FROM THE SIDEWALK WITHIN THE BLOCK

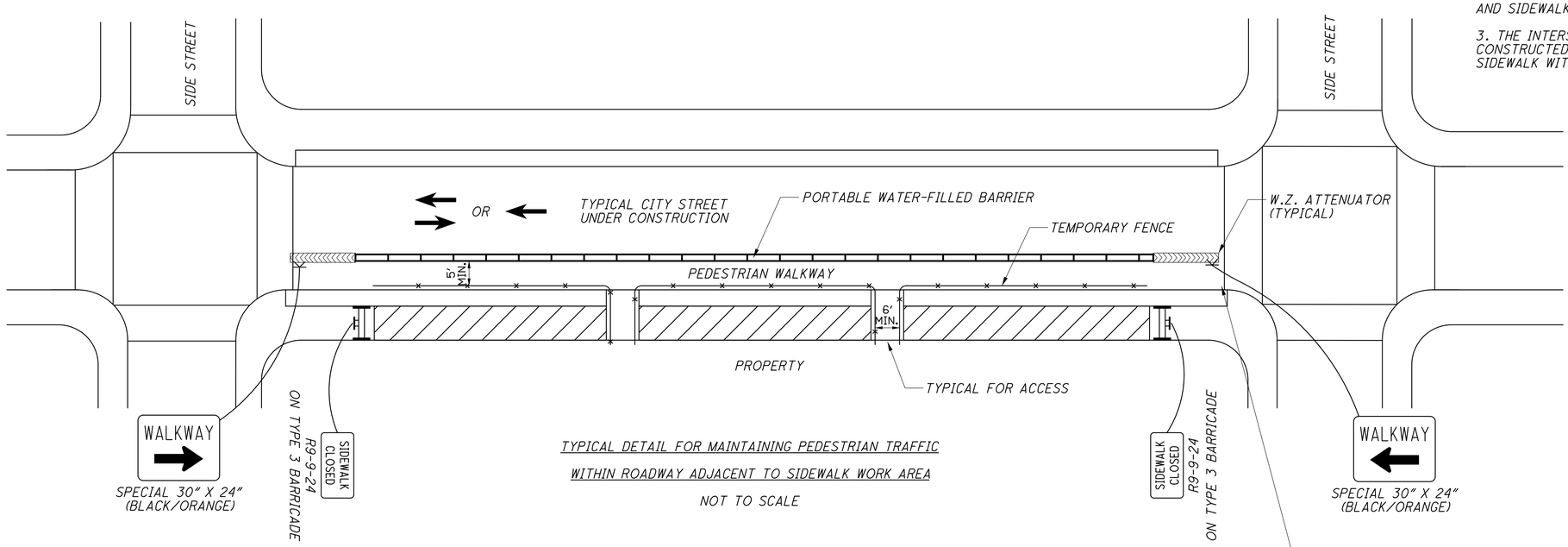

TYPICAL DETAIL FOR MAINTAINING PEDESTRIAN TRAFFIC

WITHIN ROADWAY ADJACENT TO SIDEWALK WORK AREA

NOT TO SCALE

CALCULATED JAH
CHECKED JML

MAINTENANCE OF TRAFFIC - PEDESTRIAN DETAILS

FRA-70-14.54

ms consultants, inc.

PLOT.CEL

ms consultants, inc.
msconsultants.com

www.msconsultants.com

Ohio DOT Workspace
70\71 East Interchange 2E

0 0.5" 1"

Batchplot Spec: \\msconsultants.com\files\production\03\60\06634_2E\standards\plotdrv\batchplt.spc
Pen Table: \\msconsultants.com\files\Standards\usth\ohdot\V8i\ms\plotting\pen\V8i_ms_std.tbl PCF: ohdotV8i
Plot Driver: \\msconsultants.com\files\Standards\usth\ohdot\v8i\ms\plotting\PDF.pltcfg PCF: 60-06634_2E_Columbus

34" x 22"

Model: Sheet View: FENCE_VIEW1
Printed: 9/28/2018 @ 10:07:06 AM By: kryan
File: N:\03\60\06634_2E\mot\sheets\05322MM0002.dgn

TYPICAL PEDESTRIAN DETOUR DURING CURB RAMP RECONSTRUCTION

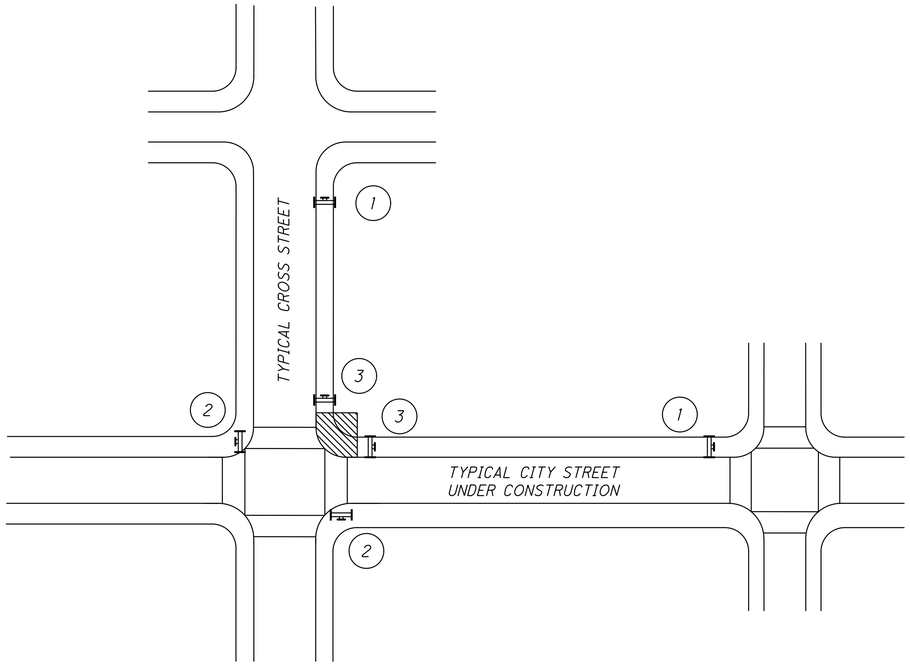

TYPICAL CROSSWALK CLOSURE DURING PART-WIDTH CONSTRUCTION

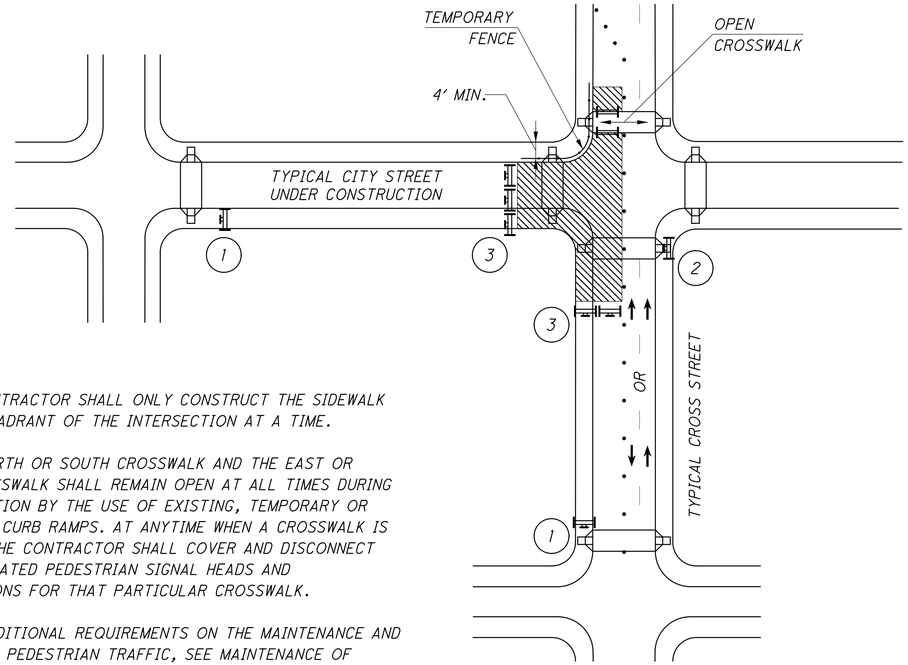

NOTES:

1. THE CONTRACTOR SHALL ONLY CONSTRUCT THE SIDEWALK IN ONE QUADRANT OF THE INTERSECTION AT A TIME.

2. THE NORTH OR SOUTH CROSSWALK AND THE EAST OR WEST CROSSWALK SHALL REMAIN OPEN AT ALL TIMES DURING CONSTRUCTION BY THE USE OF EXISTING, TEMPORARY OR PROPOSED CURB RAMPS. AT ANYTIME WHEN A CROSSWALK IS CLOSED, THE CONTRACTOR SHALL COVER AND DISCONNECT THE AFFILIATED PEDESTRIAN SIGNAL HEADS AND PUSHBUTTONS FOR THAT PARTICULAR CROSSWALK.

3. FOR ADDITIONAL REQUIREMENTS ON THE MAINTENANCE AND SAFETY OF PEDESTRIAN TRAFFIC, SEE MAINTENANCE OF TRAFFIC GENERAL NOTES, SHEETS 100-110.

SIGN LEGEND

1

R9-11L-24

OR

R9-11R-24

2

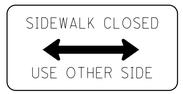

R9-10-24

3

R9-9-24

LEGEND

- 6' TYPE III BARRICADE W/ SIGN
- 6' TYPE III BARRICADE
- ACTIVE WORK AREA

CALCULATED JAH
CHECKED JML

MAINTENANCE OF TRAFFIC - PEDESTRIAN DETAILS

FRA-70-14.54

ms consultants, inc.

PLOT.CEL

ms consultants, inc.
msconsultants.com

www.msconsultants.com

Ohio DOT Workspace
70\71 East Interchange 2E

1"
0
0.5"

Batchplot Spec: \\msconsultants.com\files\production\03\60\06634_2E\standards\ylotdr\batchplt.spc
Pen Table: \\msconsultants.com\files\Standards\ustn\ohdot\V8i\ms\plotting\pen\V8i_ms_std.tbl
Plot Driver: \\msconsultants.com\files\Standards\ustn\ohdot\v8i\ms\plotting\PDF.pltcfg

CELL: ohdotV8i
DGNLIB: 60-06634_2E_Columbus

34" x 22"

Model: Sheet
Printed: 9/28/2018 @ 10:07:07 AM
File: N:\03\60\06634_2E\mot\sheets\105322MD0001.dgn

View: FENCE_VIEW1
By: kryan

CALCULATED JAH
CHECKED JML

ROAD WORK SIGN LOCATION SCHEMATIC

FRA-70-14.54

140
2317

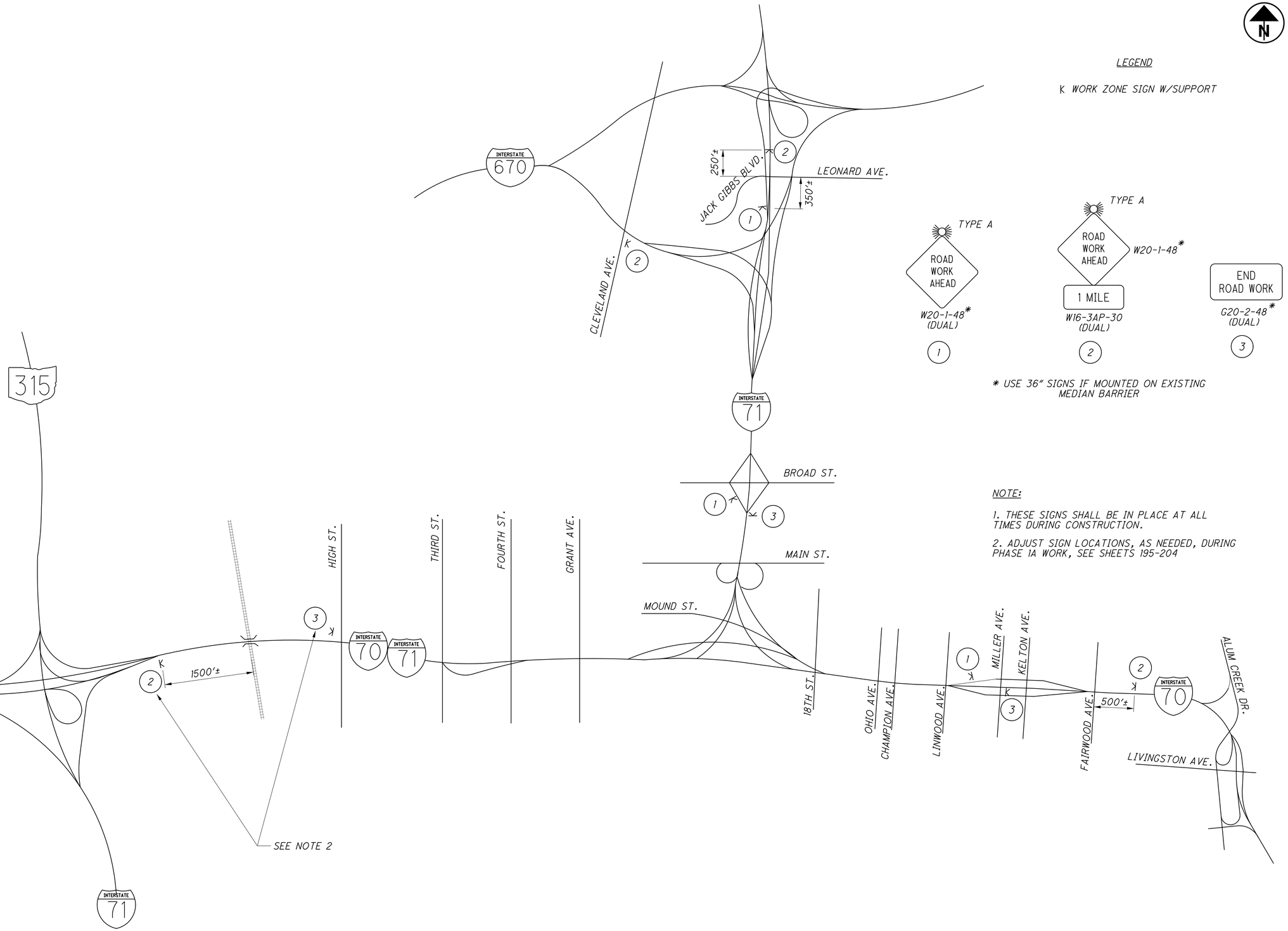

LEGEND

K WORK ZONE SIGN W/SUPPORT

TYPE A
ROAD WORK AHEAD
W20-1-48*
(DUAL)
1

TYPE A
ROAD WORK AHEAD
W20-1-48*
1 MILE
W16-3AP-30
(DUAL)
2

END ROAD WORK
G20-2-48*
(DUAL)
3

* USE 36" SIGNS IF MOUNTED ON EXISTING MEDIAN BARRIER

NOTE:

1. THESE SIGNS SHALL BE IN PLACE AT ALL TIMES DURING CONSTRUCTION.

2. ADJUST SIGN LOCATIONS, AS NEEDED, DURING PHASE 1A WORK, SEE SHEETS 195-204

PLOT.CEL

ms consultants, inc.
msconsultants.com

Ohio DOT Workspace
70\71 East Interchange 2E
www.msconsultants.com

0 0.5" 1"

Batchplot Spec: \\msconsultants.com\files\production\03\60\06634_2E\standards\plotdrv\batchplt.spc
Pen Table: \\msconsultants.com\files\Standards\ustn\ohdot\V8i\ms\plotting\pen\V8i_ms_std_PCF: ohdotV8i
Plot Driver: \\msconsultants.com\files\Standards\ustn\ohdot\v8i\ms\plotting\PDF.pltcfg PCF: 60-06634_2E_Columbus

Model: Sheet View: FENCE_VIEW1
Printed: 9/28/2018 @ 10:07:08 AM By: kryan
File: N:\03\60\06634_2E\mot\sheets\05322M80002.dgn

34" x 22"

WORK ZONE
SPEEDING
FINES DOUBLED
CAUSE DEATH OR INJURY
FINE/JAIL

R11-H5A-48 (BEHIND RIGHT BERM)
R11-H5A-24 (ON MEDIAN BARRIER)
(DUAL)

S1

W3-5-48 (BEHIND RIGHT BERM)
W3-5-36 (ON MEDIAN BARRIER)
(DUAL)

S2

R2-1-48 (BEHIND RIGHT BERM)
R2-1-24 (ON MEDIAN BARRIER)
(DUAL)

S3

EXISTING TO REMAIN

E1

EXISTING TO REMAIN

E2

COVER

E3

EXISTING TO REMAIN

E4

EXISTING TO REMAIN

E5

NOTE:

1. WORK ZONE SPEED LIMIT SIGNS SHALL BE IN PLACE AT ALL TIMES DURING CONSTRUCTION.

2. SPEED LIMIT SIGNS (R2-1) INDICATING THE RESUMPTION OF THE STATUTORY SPEED LIMIT SHALL BE PLACED AT THE FOLLOWING LOCATIONS:

- I-71 NB MAINLINE - JUST NORTH OF THE BROAD STREET ON-RAMP TO I-71 NB.

- I-70 WB MAINLINE - JUST WEST OF THE HIGH STREET BRIDGE OVER I-70/I-71.

LEGEND

K WORK ZONE SIGN W/ SUPPORT

EXISTING SIGN W/ SUPPORT

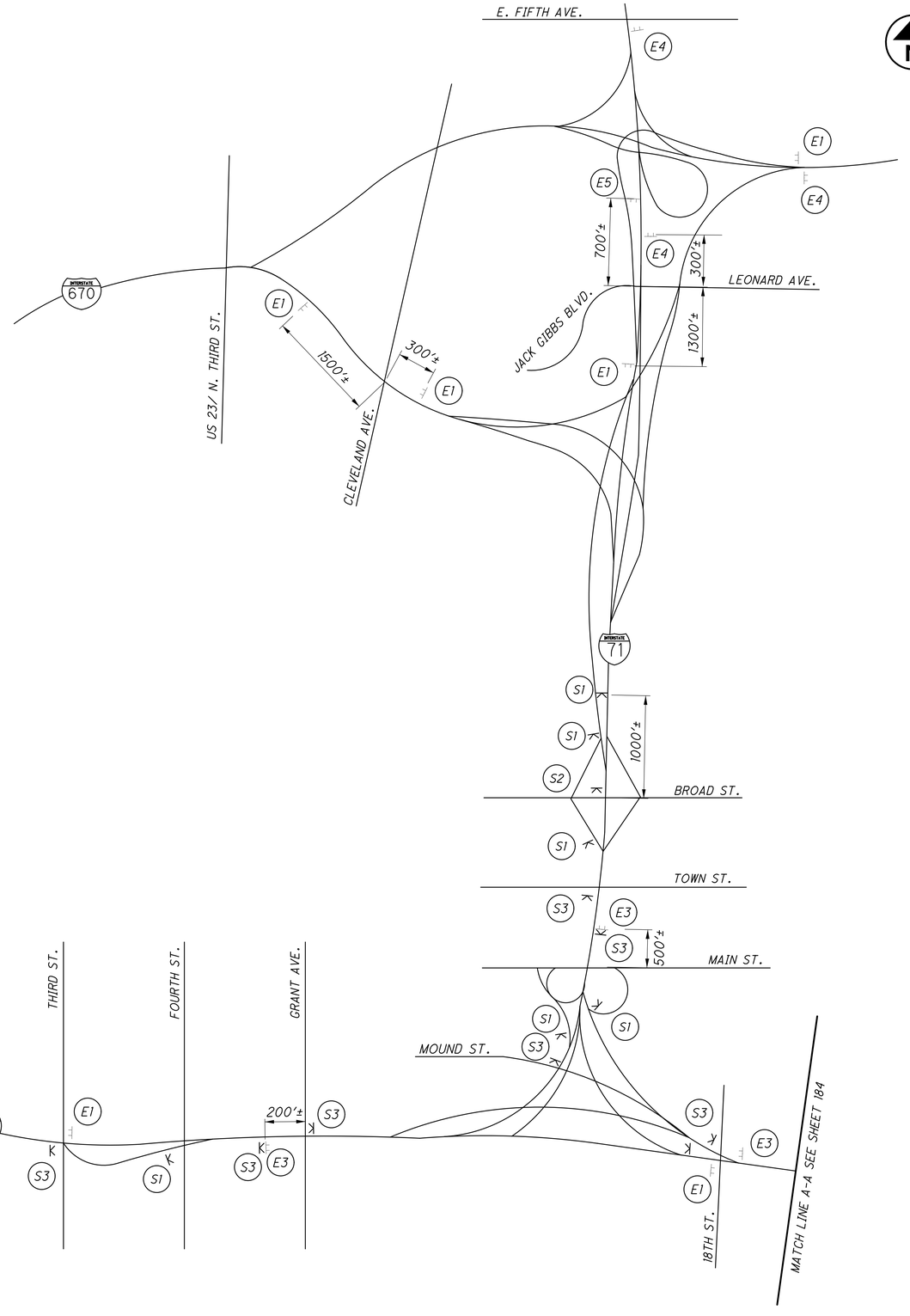

CALCULATED JAH
CHECKED JML

WORK ZONE SPEED LIMIT SIGN LOCATION SCHEMATIC

FRA-70-14.54

ms consultants, inc.

PLOT.CEL

ms consultants, inc.
msconsultants.com

www.msconsultants.com

Ohio DOT Workspace
70\71 East Interchange 2E

0 0.5" 1"

Batchplot Spec: \\msconsultants.com\Files\Production\03\60\06634.2E\standards\plotdrv\batchplt.spc
Pen Table: \\msconsultants.com\Files\Standards\usth\ohdot\V8i\ms\plotting\pen\V8i_ms_std.tbl
Plot Driver: \\msconsultants.com\Files\Standards\usth\ohdot\V8i\ms\plotting\PDF.pltcfg
PLOT: ohdotV8i
PLOTCF: 60-06634_2E_Columbus

Model: Sheet
Printed: 9/28/2018 @ 10:07:33 AM
File: N:\03\60\06634.2E\mot\sheets\05322M80003.dgn
View: FENCE_VIEW1
By: kryan

34" x 22"

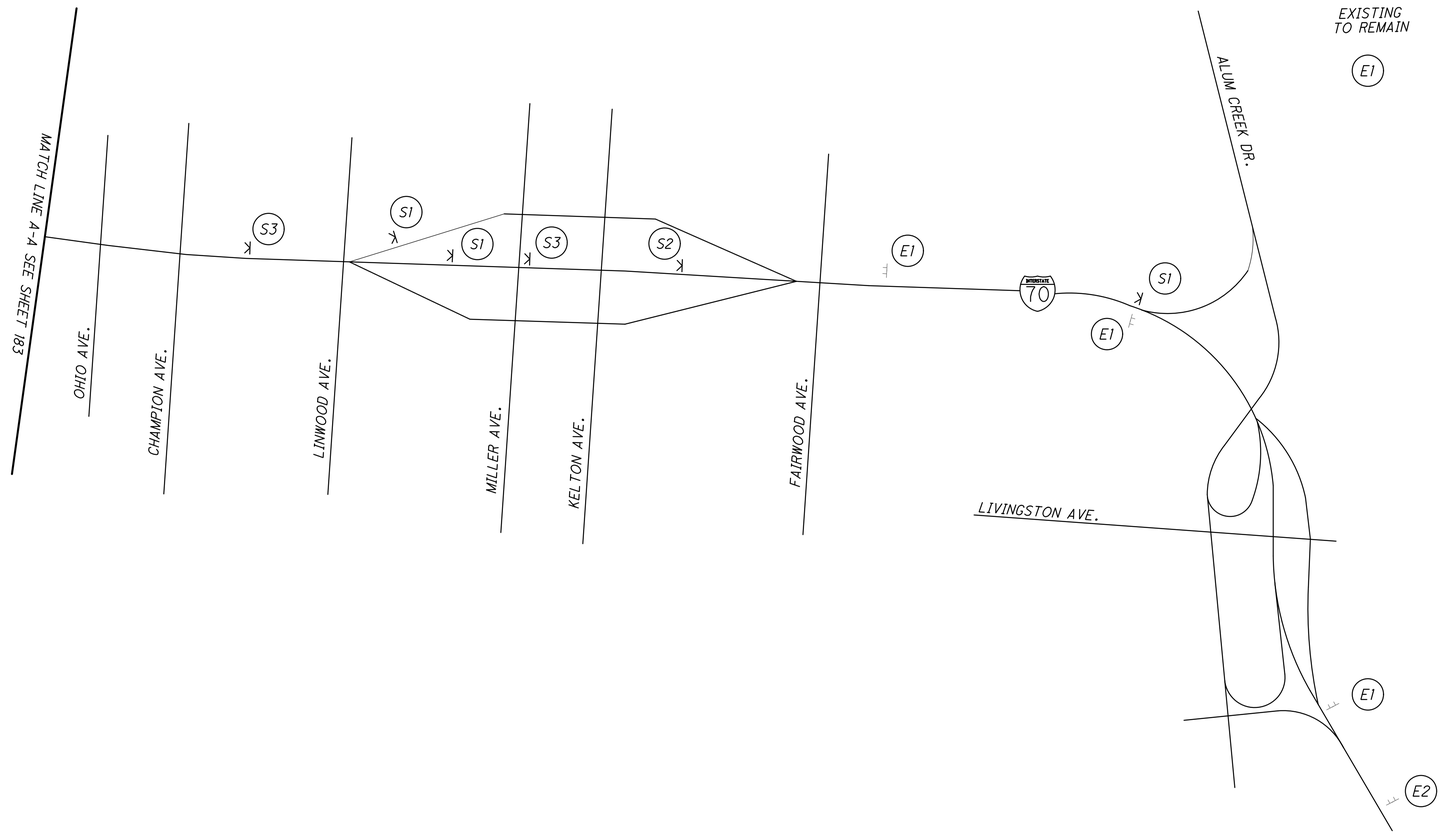

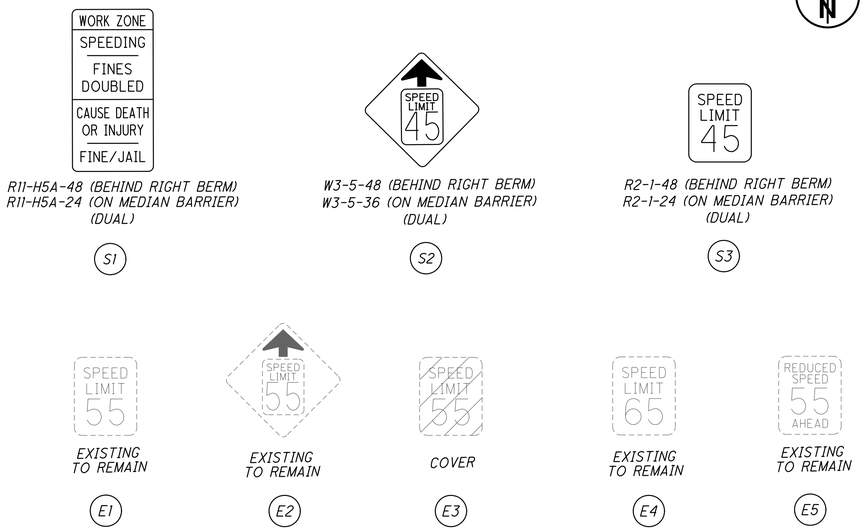

R11-H5A-48 (BEHIND RIGHT BERM)
R11-H5A-24 (ON MEDIAN BARRIER)
(DUAL)
S1

W3-5-48 (BEHIND RIGHT BERM)
W3-5-36 (ON MEDIAN BARRIER)
(DUAL)
S2

R2-1-48 (BEHIND RIGHT BERM)
R2-1-24 (ON MEDIAN BARRIER)
(DUAL)
S3

EXISTING TO REMAIN
E1

EXISTING TO REMAIN
E2

COVER
E3

EXISTING TO REMAIN
E4

EXISTING TO REMAIN
E5

LEGEND

K WORK ZONE SIGN W/ SUPPORT

EXISTING SIGN W/ SUPPORT

NOTE:

1. WORK ZONE SPEED LIMIT SIGNS SHALL BE IN PLACE AT ALL TIMES DURING CONSTRUCTION.

2. SPEED LIMIT SIGNS (R2-1) INDICATING THE RESUMPTION OF THE STATUTORY SPEED LIMIT SHALL BE PLACED AT THE FOLLOWING LOCATIONS:

- I-71 NB MAINLINE - JUST NORTH OF THE BROAD STREET ON-RAMP TO I-71 NB.

- I-70 WB MAINLINE - JUST WEST OF THE HIGH STREET BRIDGE OVER I-70/I-71.

CALCULATED JAH
CHECKED JML

WORK ZONE SPEED LIMIT SIGN LOCATION SCHEMATIC

FRA-70-14.54

142
2317

PLOT.CEL

ms consultants, inc.
msconsultants.com

www.rmsconsultants.com

Ohio DOT Workspace
70\71 East Interchange 2E

0 0.5" 1"

Batchplot Spec: \\rmsconsultants.com\files\production\03\60\06634_2E\standards\plotdrv\batchplt.spc
Pen Table: \\rmsconsultants.com\files\Standards\usth\ohdot\V8i\ms\plotting\pen\V8i_ms_std.tbl PCF: ohdotV8i
Plot Driver: \\rmsconsultants.com\files\Standards\usth\ohdot\V8i\ms\plotting\PDF.pltcfg PCF: 60-06634_2E_Columbus

Model: Sheet View: FENCE_VIEW1
Printed: 9/28/2018 @ 10:07:34 AM By: kryan
File: N:\03\60\06634_2E\mot\sheets\105322M80004.dgn

34" x 22"

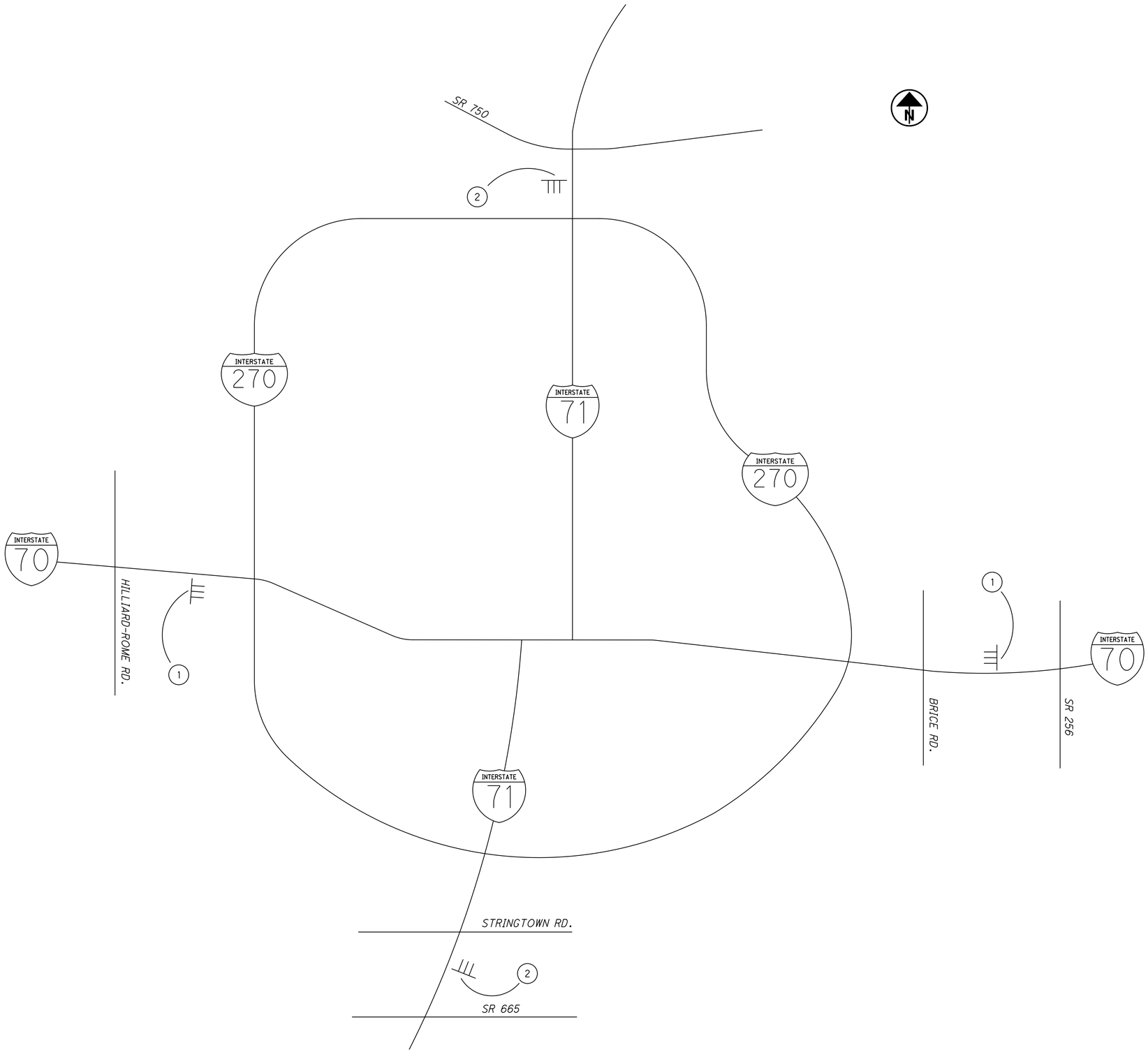

LEGEND

1

MAJOR CONSTRUCTION
INTERSTATE 70 **AT** INTERSTATE 71
ALT ROUTE USE INTERSTATE 270

SPECIAL 204" X 96"
(BLACK/ORANGE)

2

MAJOR CONSTRUCTION
INTERSTATE 71 **AT** INTERSTATE 70
ALT ROUTE USE INTERSTATE 270

SPECIAL 204" X 96"
(BLACK/ORANGE)

NOTE:

1. ADVANCE WARNING SIGNS SHALL BE INSTALLED PRIOR TO BEGINNING WORK AND REMAIN IN PLACE AT ALL TIMES DURING CONSTRUCTION.

CALCULATED JAH
CHECKED JML

ADVANCE WARNING SIGN LOCATION MAP

FRA-70-14.54

ms consultants, inc.

PLOT.CEL

ms consultants, inc.
msconsultants.com

www.msconsultants.com

Ohio DOT Workspace
70\71 East Interchange 2E

0 0.5" 1"

PDF: ohdot\V8i
PLOT: 60-06634_2E_Columbus

Batchplot Spec: \\msconsultants.com\files\production\03\60\06634_2E\standards\plotdr\batchplt.spc
Pen Table: \\msconsultants.com\files\Standards\ustn\ohdot\V8i\ms\plotting\pen\V8i_ms_std.tbl
Plot Driver: \\msconsultants.com\files\Standards\ustn\ohdot\v8i\ms\plotting\PDF.pltcfg

34" x 22"

Model: Sheet
Printed: 9/28/2018 @ 10:07:36 AM
File: N:\03\60\06634_2E\mot\sheets\105322MD0005.dgn

View: FENCE_VIEW1
By: kryan

GREENLAWN AVE.

NOTES:

1. ALL PAVEMENT MARKINGS ARE EXISTING TO REMAIN UNLESS OTHERWISE NOTED.

2. THE MODIFICATIONS SHOWN SHALL BE COMPLETED PRIOR TO BEGINNING PHASE 1 AND SHALL REMAIN IN PLACE THROUGHOUT THE DURATION OF THE PROJECT.

70 INTERSTATE

N

315

EXISTING SIGNS AT EXIT RAMP TO I-70 WB

M3-2-36 EAST INTERSTATE 670
M11-1-48-3
I-5-30

EXIT 106A
70 WEST
Dayton
EXIT ONLY

315 NORTH
Worthington

62 3
Rich St
Town St
EXIT ½ MILE

EXISTING SIGNS AT EXIT RAMP TO I-70 EB

I-5-30

EXIT 106A
70 WEST
Dayton
EXIT ONLY

EXIT 106B
315 NORTH
Worthington
EXIT ONLY

71 NORTH 70 EAST
Cleveland
Wheeling

102" X 84" OVERLAY (WHITE/GREEN)

NORTH
315

TO EAST
INTERSTATE 670

102" X 84" OVERLAY (BLACK/ORANGE)

INTERSTATE 71

I-5-30

EXIT 106A
70 WEST
Dayton
EXIT ONLY

EXIT 106B
315 NORTH
Worthington
EXIT ONLY

71 NORTH 71 EAST
Cleveland
Wheeling

102" X 84" OVERLAY (WHITE/GREEN)

NORTH
315

TO EAST
INTERSTATE 670

102" X 84" OVERLAY (BLACK/ORANGE)

SPECIAL 204" X 96" LEVEL 1 - GROUND MOUNTED (BLACK/ORANGE) NORTH OF GREENLAWN AVE. ENTRANCE RAMP

TO 670 EAST
Airport
USE 315 NORTH

SIGNS ON EXISTING TRUSS SOUTH OF GREENLAWN AVE.

EXIT 106A
70 WEST
Dayton
1 MILE
EXIT ONLY

EXIT 106B
315 NORTH
NORTH 71 EAST 70
Cleveland
Wheeling
1 MILE

RELOCATE PANEL

CALCULATED JAH
CHECKED JML

I-71 NB ADVANCE SIGNING FOR I-670 EB/AIRPORT

FRA-70-14.54

144
2317

PLOT.CEL

ms consultants, inc.
msconsultants.com

ms consultants, inc.
www.msconsultants.com

Ohio DOT Workspace
70\71 East Interchange 2E

1"
0.5"
0

PDF: ohdot\V8i
PLOT: 60-06634_2E_Columbus

Batchplot Spec: \\msconsultants.com\files\production\03\60\06634_2E\standards\plotdir\batchplt.spc
Pen Table: \\msconsultants.com\files\Standards\usth\ohdot\V8i\ms\plotting\pen\V8i_ms_std.tbl
Plot Driver: \\msconsultants.com\files\Standards\usth\ohdot\V8i\ms\plotting\PDF.pltcfg

Model: Sheet
Printed: 9/28/2018 @ 10:07:37 AM
File: N:\03\60\06634_2E\mot sheets\105322M00006.dgn
View: FENCE_VIEW1
By: kryan

34" x 22"

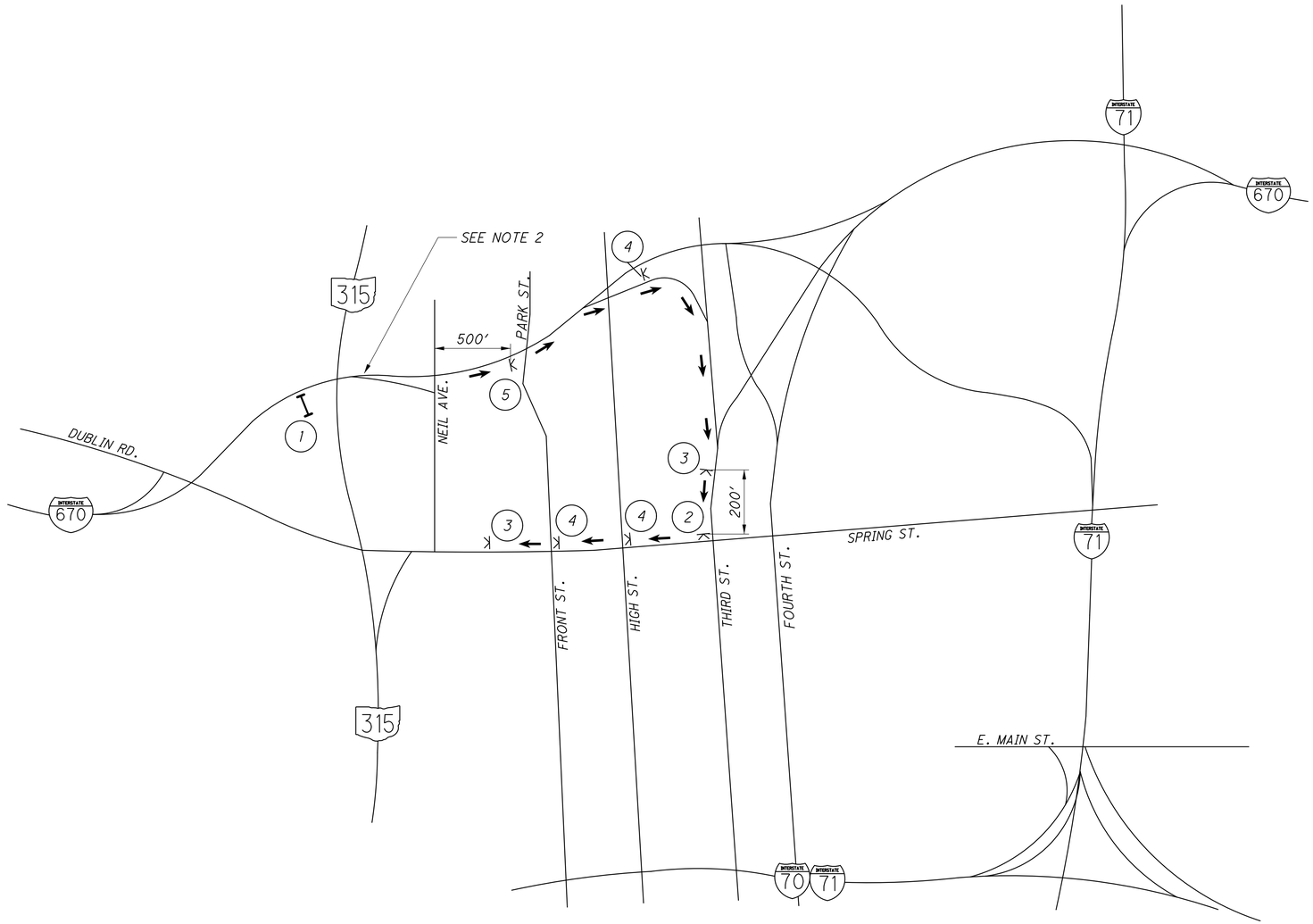

MESSAGES FOR PORTABLE CHANGEABLE MESSAGE SIGNS

(2 SEC)

NEIL AVE
EXIT
CLOSES

(2 SEC)

XX/XX/XX
TO
XX/XX/XX

1

D3-1 48" X 12" (BLACK/ORANGE)

NEIL AVE
DETOUR

M4-9R-30

2

NEIL AVE
DETOUR

M4-H9BR-30

3

NEIL AVE
DETOUR

M4-H9T-30

4

NEIL AVE
TRAFFIC
USE
THIRD ST

SPECIAL 48" X 60"
(BLACK/ORANGE)

5

LEGEND

I PORTABLE CHANGEABLE MESSAGE SIGN

K WORK ZONE SIGN W/ SUPPORT

← DETOUR ROUTE

NOTES:

1. THIS DETOUR SHALL BE IMPLEMENTED PRIOR TO BEGINNING PHASE 1 AND BE IN EFFECT FOR THE DURATION OF THIS PROJECT.

2. SEE SHEETS 146 - 149 FOR THE MAINTENANCE OF TRAFFIC SETUP AND OVERHEAD SIGNING ON I-670 EB.

3. PCMS (1) SHALL BE PLACED FIVE (5) DAYS PRIOR TO CLOSURE.

CALCULATED JAH
CHECKED JML

TYPICAL DETOUR - I-670 EB TO NEIL AVE. RAMP CLOSURE

FRA-70-14.54

ms consultants, inc.

34" x 22"
Model: Sheet
Printed: 9/28/2018 @ 10:08:01 AM
File: N:\03\60\06634_2E\mot\sheets\105322MP2100.dgn
View: FENCE_VIEW1
By: kryan
Batchplot Spec: \\msconsultants.com\files\production\03\60\06634_2E\standards\plotdrv\batchplt.spf
Pen Table: \\msconsultants.com\files\Standards\ustn\ohdot\V8i\ms\plotting\pen\V8i_ms_std.tbl
Plot Driver: \\msconsultants.com\files\Standards\ustn\ohdot\v8i\ms\plotting\PDF.pltcfg
PCF: ohdotV8i
PCF: 60-06634_2E_Columbus
Ohio DOT Workspace
70\71 East Interchange 2E
PLOT.CEL
ms consultants, inc.
msconsultants.com
www.msconsultants.com

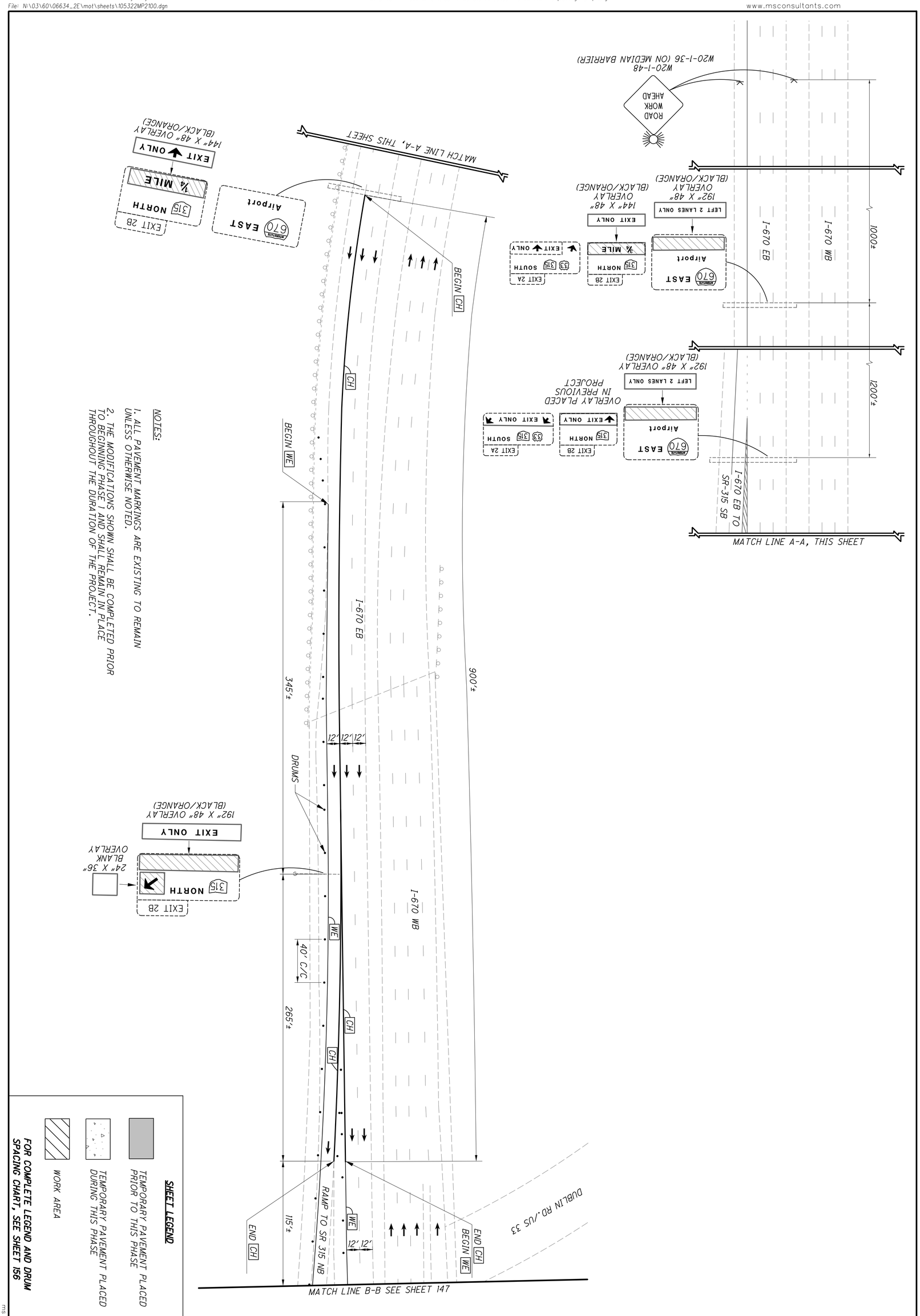

NOTES:

1. ALL PAVEMENT MARKINGS ARE EXISTING TO REMAIN UNLESS OTHERWISE NOTED.
2. THE MODIFICATIONS SHOWN SHALL BE COMPLETED PRIOR TO BEGINNING PHASE 1 AND SHALL REMAIN IN PLACE THROUGHOUT THE DURATION OF THE PROJECT.

SHEET LEGEND

- TEMPORARY PAVEMENT PLACED PRIOR TO THIS PHASE
- TEMPORARY PAVEMENT PLACED DURING THIS PHASE
- WORK AREA

FOR COMPLETE LEGEND AND DRUM SPACING CHART, SEE SHEET 156

146 / 2317	FRA-70-14.54	MAINTENANCE OF TRAFFIC SR 315 NB/I-670 EB MODIFICATIONS	CALCULATED JAH CHECKED JML	0 40 20 80 HORIZONTAL SCALE IN FEET

ms consultants, inc.

PLOT.CEL

ms consultants, inc.
msconsultants.com

ms consultants, inc.
www.msconsultants.com

Ohio DOT Workspace
70\71 East Interchange 2E

0 0.5" 1"

Batchplot Spec: \\msconsultants.com\files\production\03\60\06634.2E\standards\plotdrv\batchplt.spc
Pen Table: \\msconsultants.com\files\Standards\usitn\ohdot\V8i\ms\plotting\pen\V8i_ms_std.tbl PDF: ohdot\V8i
Plot Driver: \\msconsultants.com\files\Standards\usitn\ohdot\v8i\ms\plotting\PDF.pltcfg PCF: 60-06634_2E_Columbus

Model: Sheet View: FENCE_VIEW1
Printed: 9/28/2018 @ 10:08:02 AM By: kryan
File: N:\03\60\06634.2E\mot\sheets\105322MP2101.dgn

34" x 22"

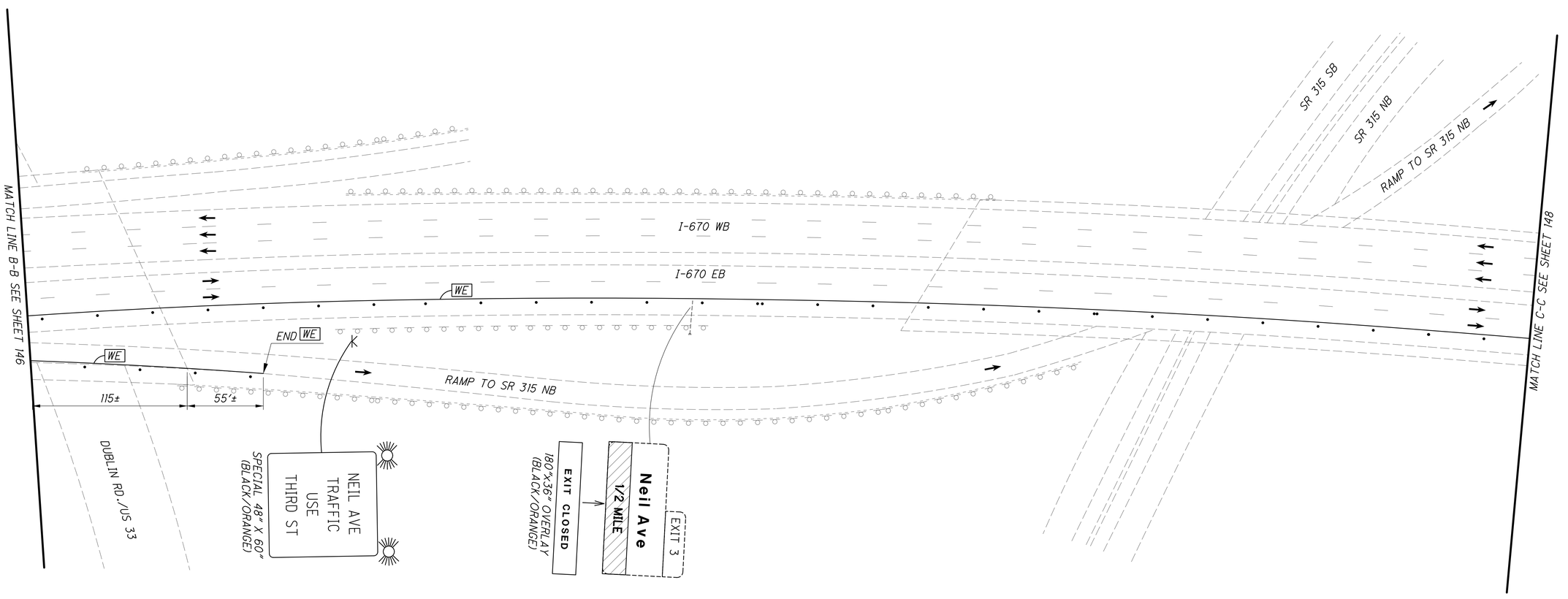

NOTES:

1. ALL PAVEMENT MARKINGS ARE EXISTING TO REMAIN UNLESS OTHERWISE NOTED.

2. THE MODIFICATIONS SHOWN SHALL BE COMPLETED PRIOR TO BEGINNING PHASE 1 AND SHALL REMAIN IN PLACE THROUGHOUT THE DURATION OF THE PROJECT.

SHEET LEGEND

- TEMPORARY PAVEMENT PLACED PRIOR TO THIS PHASE
- TEMPORARY PAVEMENT PLACED DURING THIS PHASE
- WORK AREA

FOR COMPLETE LEGEND AND DRUM SPACING CHART, SEE SHEET 156

0 20 40 80
HORIZONTAL SCALE IN FEET

CALCULATED JAH
CHECKED JML

MAINTENANCE OF TRAFFIC
SR 315 NB/I-670 EB MODIFICATIONS

FRA-70-14.54

147
2317

PLOT.CEL

ms consultants, inc.
msconsultants.com

www.msconsultants.com

Ohio DOT Workspace
70\71 East Interchange 2E

Batchplot Spec: \\msconsultants.com\files\production\03\60\06634_2E\standards\plotdr\batchplt.spc
Pen Table: \\msconsultants.com\files\Standards\ustn\ohdot\V8i\ms\plotting\pen\V8i_ms_std.tbl
Plot Driver: \\msconsultants.com\files\Standards\ustn\ohdot\v8i\ms\plotting\PDF.pltcfg
PDF: ohdot\V8i
PLCF: 60-06634_2E_Columbus

0 0.5" 1"

34" x 22"

Model: Sheet
Printed: 9/28/2018 @ 10:08:04 AM
File: N:\03\60\06634_2E\mot\sheets\105220MP2102.dgn
View: FENCE_VIEW1
By: kryan

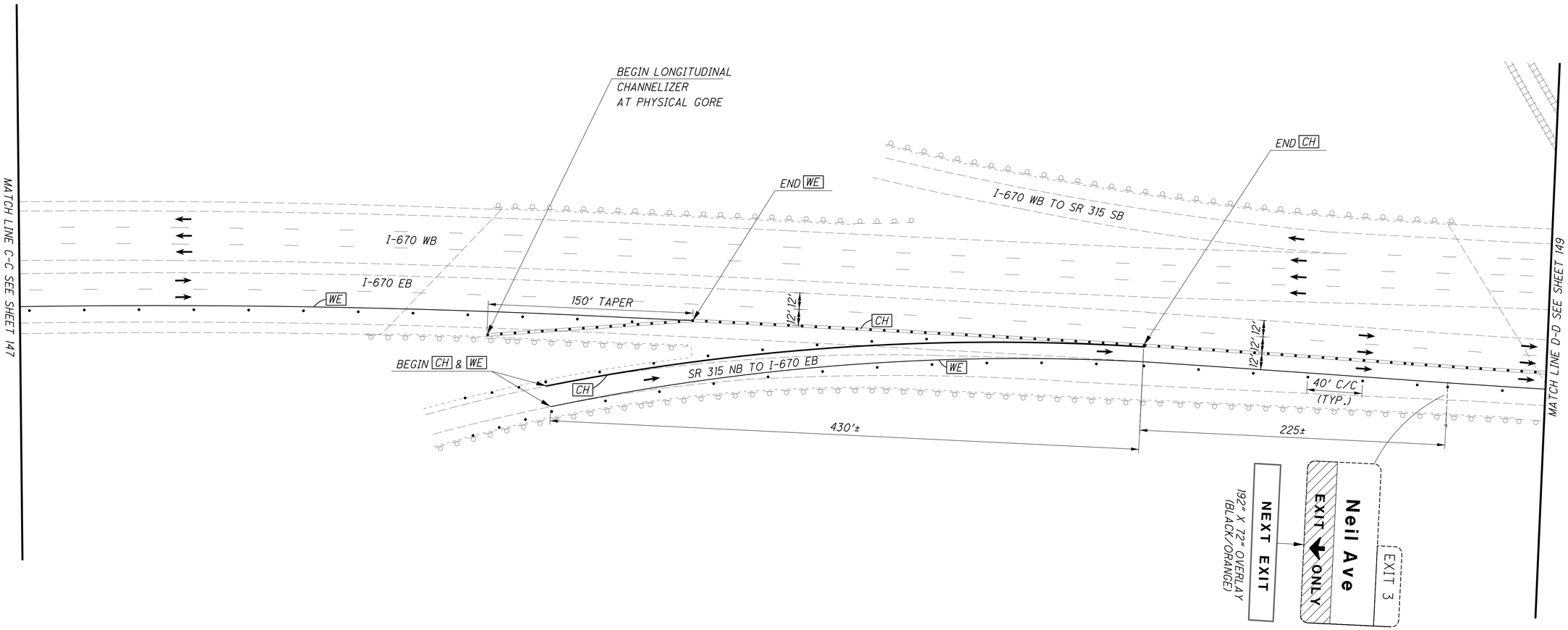

NOTES:

1. ALL PAVEMENT MARKINGS ARE EXISTING TO REMAIN UNLESS OTHERWISE NOTED.

2. THE MODIFICATIONS SHOWN SHALL BE COMPLETED PRIOR TO BEGINNING PHASE 1 AND SHALL REMAIN IN PLACE THROUGHOUT THE DURATION OF THE PROJECT.

SHEET LEGEND

- TEMPORARY PAVEMENT PLACED PRIOR TO THIS PHASE
- TEMPORARY PAVEMENT PLACED DURING THIS PHASE
- WORK AREA

FOR COMPLETE LEGEND AND DRUM SPACING CHART, SEE SHEET 156

0 20 40 80
HORIZONTAL SCALE IN FEET

CALCULATED JAH
CHECKED JML

MAINTENANCE OF TRAFFIC
SR 315 NB/I-670 EB MODIFICATIONS

FRA-70-14.54

ms consultants, inc.

PLOT.CEL

ms consultants, inc.
msconsultants.com

Ohio DOT Workspace
70\71 East Interchange 2E

www.msconsultants.com

0 0.5" 1"

Batchplot Spec: \\msconsultants.com\files\production\03\60\06634_2E\standards\plotdir\batchplt.spc
Pen Table: \\msconsultants.com\files\Standards\ustn\ohdot\V8i\ms\plotting\pen\V8i_ms_std.tbl PCF: ohdot\V8i
Plot Driver: \\msconsultants.com\files\Standards\ustn\ohdot\v8i\ms\plotting\PDF.pltcfg PCF: 60-06634_2E_Columbus

Model: Sheet View: FENCE_VIEW1
Printed: 9/28/2018 @ 10:08:06 AM By: kryan
File: N:\03\60\06634_2E\mot\sheets\105322MP2103.dgn

34" x 22"

NOTES:

1. ALL PAVEMENT MARKINGS ARE EXISTING TO REMAIN UNLESS OTHERWISE NOTED.

2. THE MODIFICATIONS SHOWN SHALL BE COMPLETED PRIOR TO BEGINNING PHASE 1 AND SHALL REMAIN IN PLACE THROUGHOUT THE DURATION OF THE PROJECT.

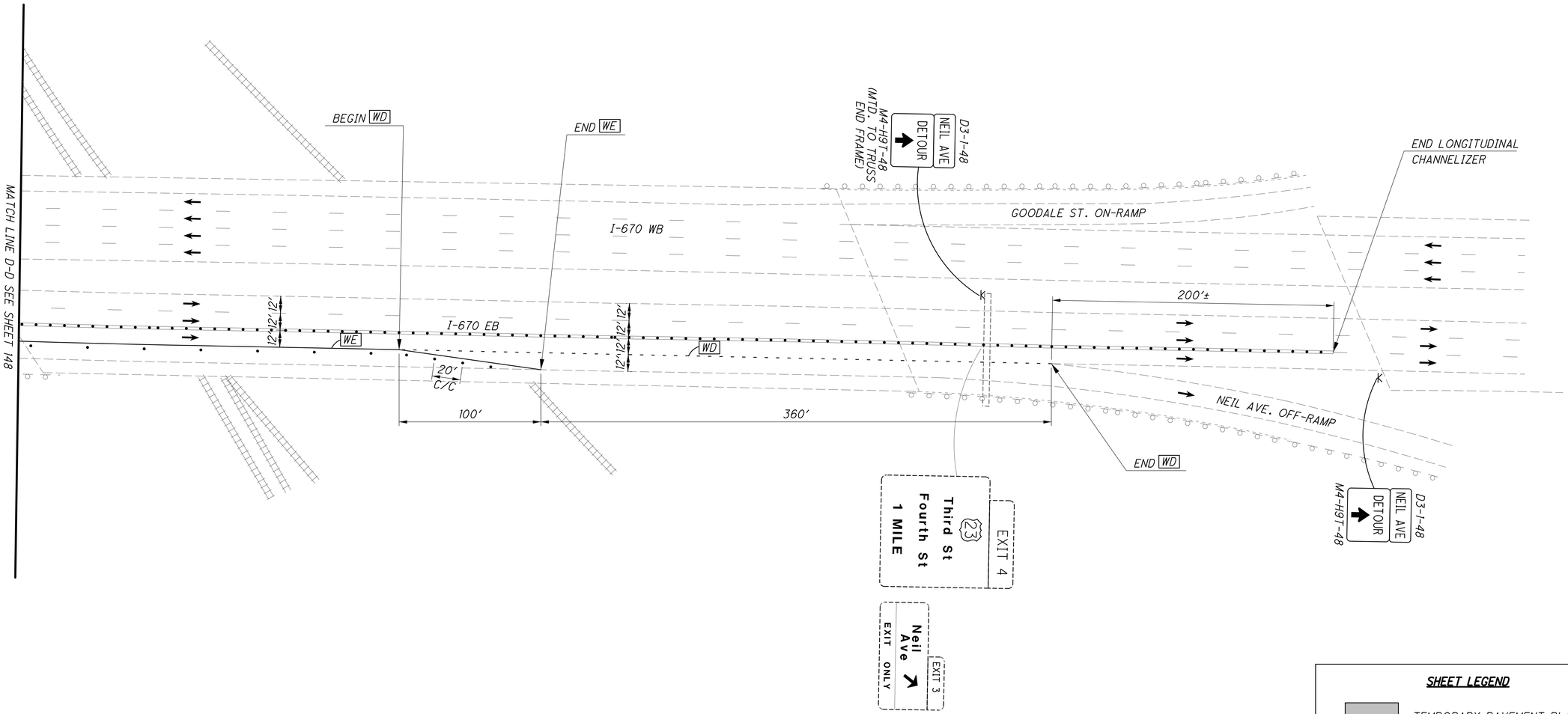

SHEET LEGEND

- TEMPORARY PAVEMENT PLACED PRIOR TO THIS PHASE
- TEMPORARY PAVEMENT PLACED DURING THIS PHASE
- WORK AREA

FOR COMPLETE LEGEND AND DRUM SPACING CHART, SEE SHEET 156

0 20 40 80 HORIZONTAL SCALE IN FEET

CALCULATED JAH CHECKED JML

MAINTENANCE OF TRAFFIC
SR 315 NB/I-670 EB MODIFICATIONS

FRA-70-14.54

ms consultants, inc.

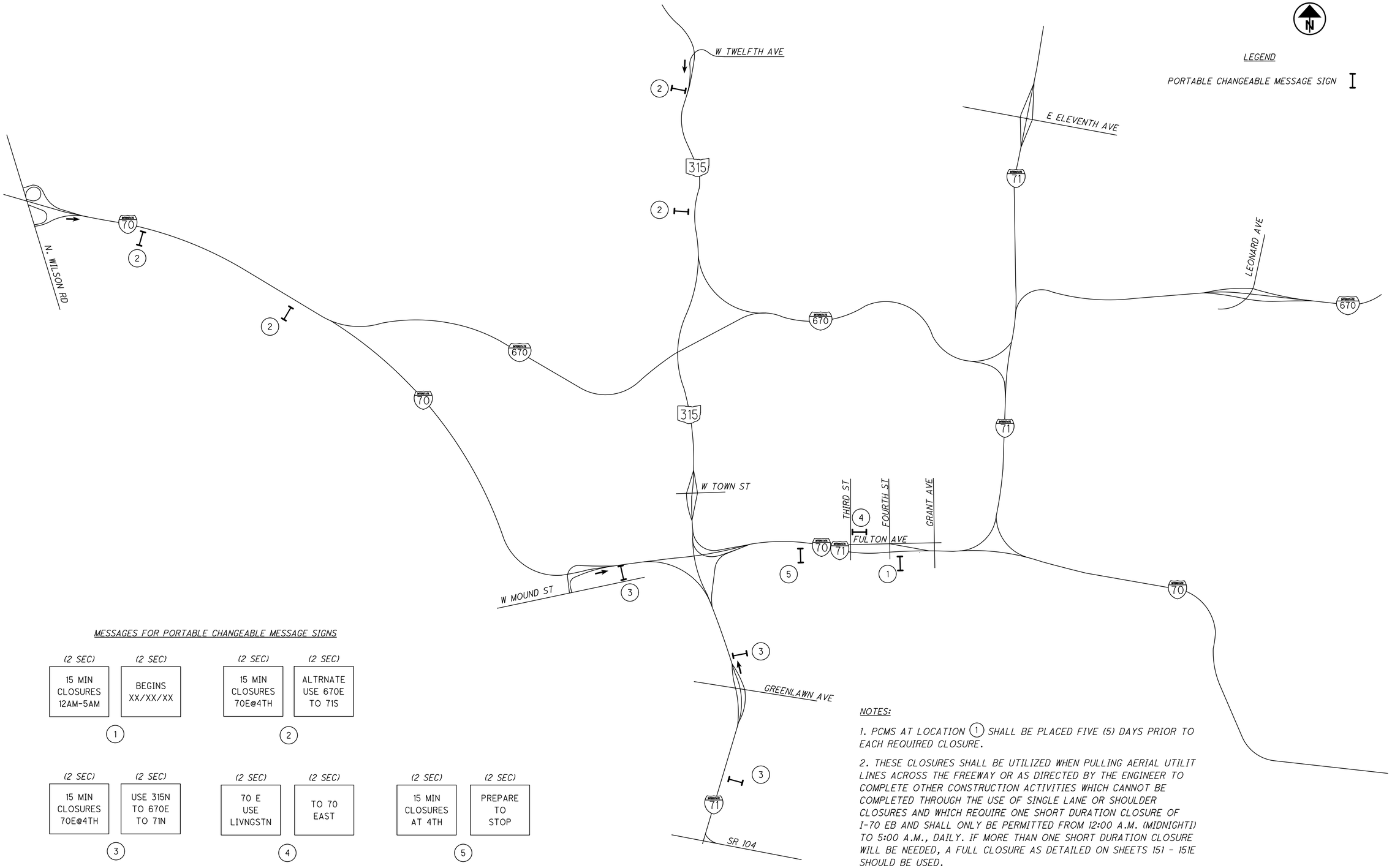

LEGEND

PORTABLE CHANGEABLE MESSAGE SIGN

MESSAGES FOR PORTABLE CHANGEABLE MESSAGE SIGNS

(2 SEC) 15 MIN CLOSURES 12AM-5AM	(2 SEC) BEGINS XX/XX/XX	1
(2 SEC) 15 MIN CLOSURES 70E@4TH	(2 SEC) ALTRNATE USE 670E TO 71S	2
(2 SEC) 15 MIN CLOSURES 70E@4TH	(2 SEC) USE 315N TO 670E TO 71N	3
(2 SEC) 70 E USE LIVNGSTN	(2 SEC) TO 70 EAST	4
(2 SEC) 15 MIN CLOSURES AT 4TH	(2 SEC) PREPARE TO STOP	5

NOTES:

1. PCMS AT LOCATION 1 SHALL BE PLACED FIVE (5) DAYS PRIOR TO EACH REQUIRED CLOSURE.

2. THESE CLOSURES SHALL BE UTILIZED WHEN PULLING AERIAL UTILIT LINES ACROSS THE FREEWAY OR AS DIRECTED BY THE ENGINEER TO COMPLETE OTHER CONSTRUCTION ACTIVITIES WHICH CANNOT BE COMPLETED THROUGH THE USE OF SINGLE LANE OR SHOULDER CLOSURES AND WHICH REQUIRE ONE SHORT DURATION CLOSURE OF I-70 EB AND SHALL ONLY BE PERMITTED FROM 12:00 A.M. (MIDNIGHTI) TO 5:00 A.M., DAILY. IF MORE THAN ONE SHORT DURATION CLOSURE WILL BE NEEDED, A FULL CLOSURE AS DETAILED ON SHEETS 151 - 151E SHOULD BE USED.

3. SEE MT-99.60 FOR ADDITIONAL DETAILS ON SHORT DURATION CLOSURES.

CALCULATED JAH
CHECKED JML

PCMS LOCATIONS FOR I-70 EB SHORT DURATION CLOSURES

FRA-70-14.54

PLOT.CEL
ms consultants, inc.
msconsultants.com
Ohio DOT Workspace
70\71 East Interchange 2E
www.msconsultants.com
Batchplot Spec: \\msconsultants.com\files\production\03\60\06634_2E\standards\plotdrv\batchplt.spc
Pen Table: \\msconsultants.com\files\Standards\ustn\ohdot\V8i\ms\plotting\pen\V8i_ms_std.tbl
Plot Driver: \\msconsultants.com\files\Standards\ustn\ohdot\v8i\ms\plotting\PDF.pltcfg
34" x 22"
Model: Sheet
Printed: 9/28/2018 @ 10:08:07 AM
File: N:\03\60\06634_2E\mot\sheets\105322M00005.dgn
View: FENCE_VIEW1
By: kryan
ms consultants, inc.

PLOT.CEL

ms consultants, inc.
msconsultants.com

www.msconsultants.com

Ohio DOT Workspace
70\71 East Interchange 2E

1"
0
0.5"

Batchplot Spec: \\vmsconsultants.com\Files\Production\03\60\06634_2E\standards\plotdrv\batchplt.spc
Pen Table: N:\03\60\06634_2E\standards\tables\V8i_ms_std_06634_2D_Plan View_NoClouds.tbl
Plot Driver: \\vmsconsultants.com\Files\Standards\ustn\ohdot\v8i\ms\plotting\PDF: ohdot V8i
PLOT: 60-06634_2E_Columbus

34" x 22"

View: FENCE_VIEW1
By: awhite

Model: Sheet
Printed: 1/17/2019 @ 11:46:32 AM
File: \\vmsconsultants.com\Files\Production\03\60\06634_2E\mot\sheets\1153220MD1006.dgn

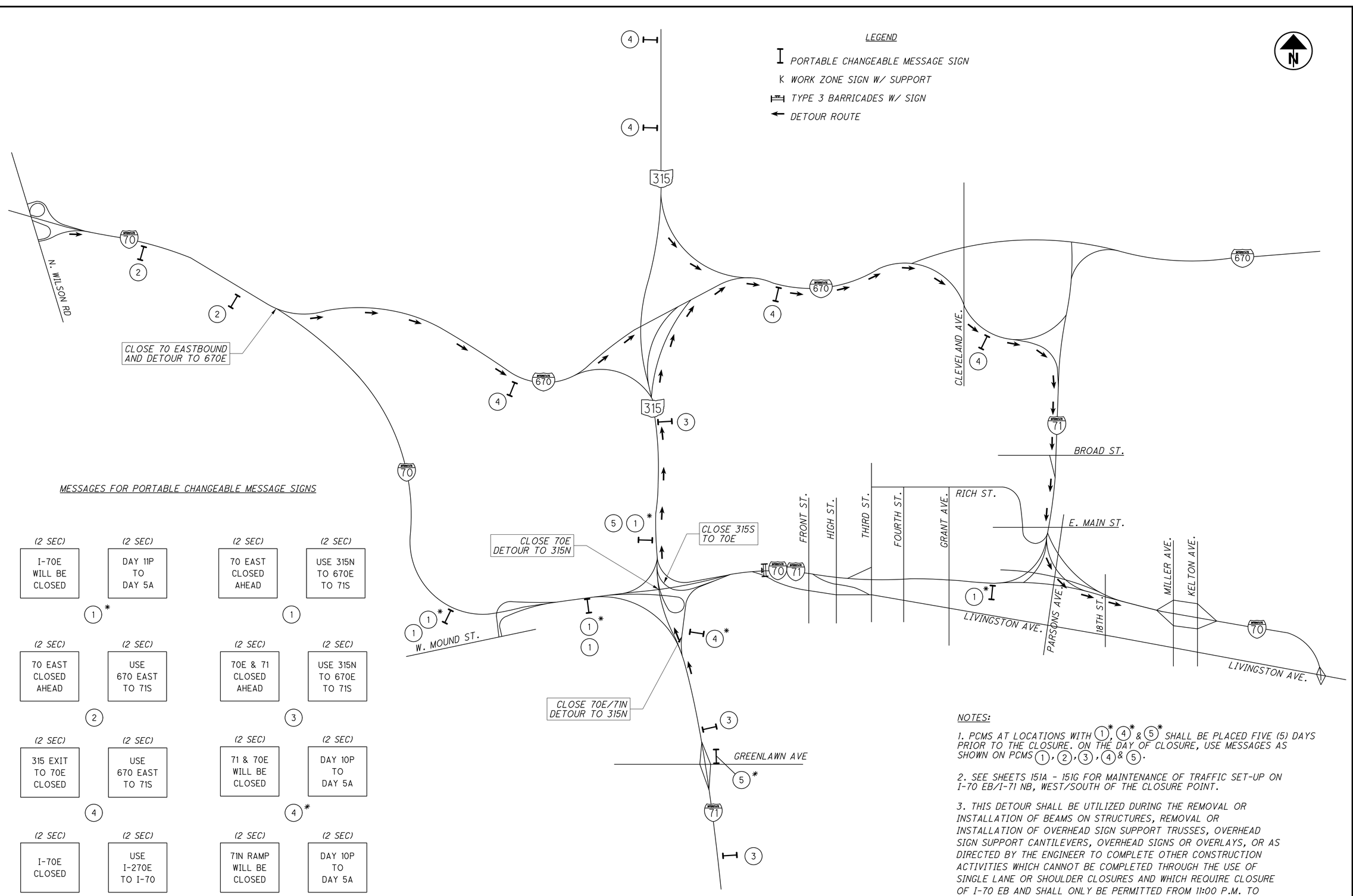

MESSAGES FOR PORTABLE CHANGEABLE MESSAGE SIGNS

(2 SEC) I-70E WILL BE CLOSED	(2 SEC) DAY 11P TO DAY 5A	(2 SEC) 70 EAST CLOSED AHEAD	(2 SEC) USE 315N TO 670E TO 71S
1*		1	
(2 SEC) 70 EAST CLOSED AHEAD	(2 SEC) USE 670 EAST TO 71S	(2 SEC) 70E & 71 CLOSED AHEAD	(2 SEC) USE 315N TO 670E TO 71S
2		3	
(2 SEC) 315 EXIT TO 70E CLOSED	(2 SEC) USE 670 EAST TO 71S	(2 SEC) 71 & 70E WILL BE CLOSED	(2 SEC) DAY 10P TO DAY 5A
4		4*	
(2 SEC) I-70E CLOSED	(2 SEC) USE I-270E TO I-70	(2 SEC) 71N RAMP WILL BE CLOSED	(2 SEC) DAY 10P TO DAY 5A
5		5*	

NOTES:

1. PCMS AT LOCATIONS WITH (1)*, (4)* & (5)* SHALL BE PLACED FIVE (5) DAYS PRIOR TO THE CLOSURE. ON THE DAY OF CLOSURE, USE MESSAGES AS SHOWN ON PCMS (1), (2), (3), (4) & (5).

2. SEE SHEETS 151A - 151G FOR MAINTENANCE OF TRAFFIC SET-UP ON I-70 EB/I-71 NB, WEST/SOUTH OF THE CLOSURE POINT.

3. THIS DETOUR SHALL BE UTILIZED DURING THE REMOVAL OR INSTALLATION OF BEAMS ON STRUCTURES, REMOVAL OR INSTALLATION OF OVERHEAD SIGN SUPPORT TRUSSES, OVERHEAD SIGN SUPPORT CANTILEVERS, OVERHEAD SIGNS OR OVERLAYS, OR AS DIRECTED BY THE ENGINEER TO COMPLETE OTHER CONSTRUCTION ACTIVITIES WHICH CANNOT BE COMPLETED THROUGH THE USE OF SINGLE LANE OR SHOULDER CLOSURES AND WHICH REQUIRE CLOSURE OF I-70 EB AND SHALL ONLY BE PERMITTED FROM 11:00 P.M. TO 5:00 A.M., DAILY.

CALCULATED JAH
CHECKED JML

TYPICAL DETOUR - I-70 EB CLOSURE

FRA-70-14.54

ms consultants, inc.

PLOT.CEL

ms consultants, inc.
msconsultants.com

www.msconsultants.com

Ohio DOT Workspace
70\71 East Interchange 2E

0 0.5" 1"

Batchplot Spec: \\msconsultants.com\files\production\03\60\06634_2E\standards\xlotdr\batchplt.spc
Pen Table: \\msconsultants.com\files\Standards\usth\ohdot\V8i\ms\plotting\pen\V8i_ms_std.tbl PCF: ohdotV8i
Plot Driver: \\msconsultants.com\files\Standards\usth\ohdot\V8i\ms\plotting\PDF.pltcfg PCF: 60-06634_2E_Columbus

Model: Sheet @ 10:08:12 AM View: FENCE_VIEW1
Printed: 9/28/2018 By: kryan
File: \\msconsultants.com\files\Production\03\60\06634_2E\mot\sheets\105322MPB001.dgn

34" x 22"

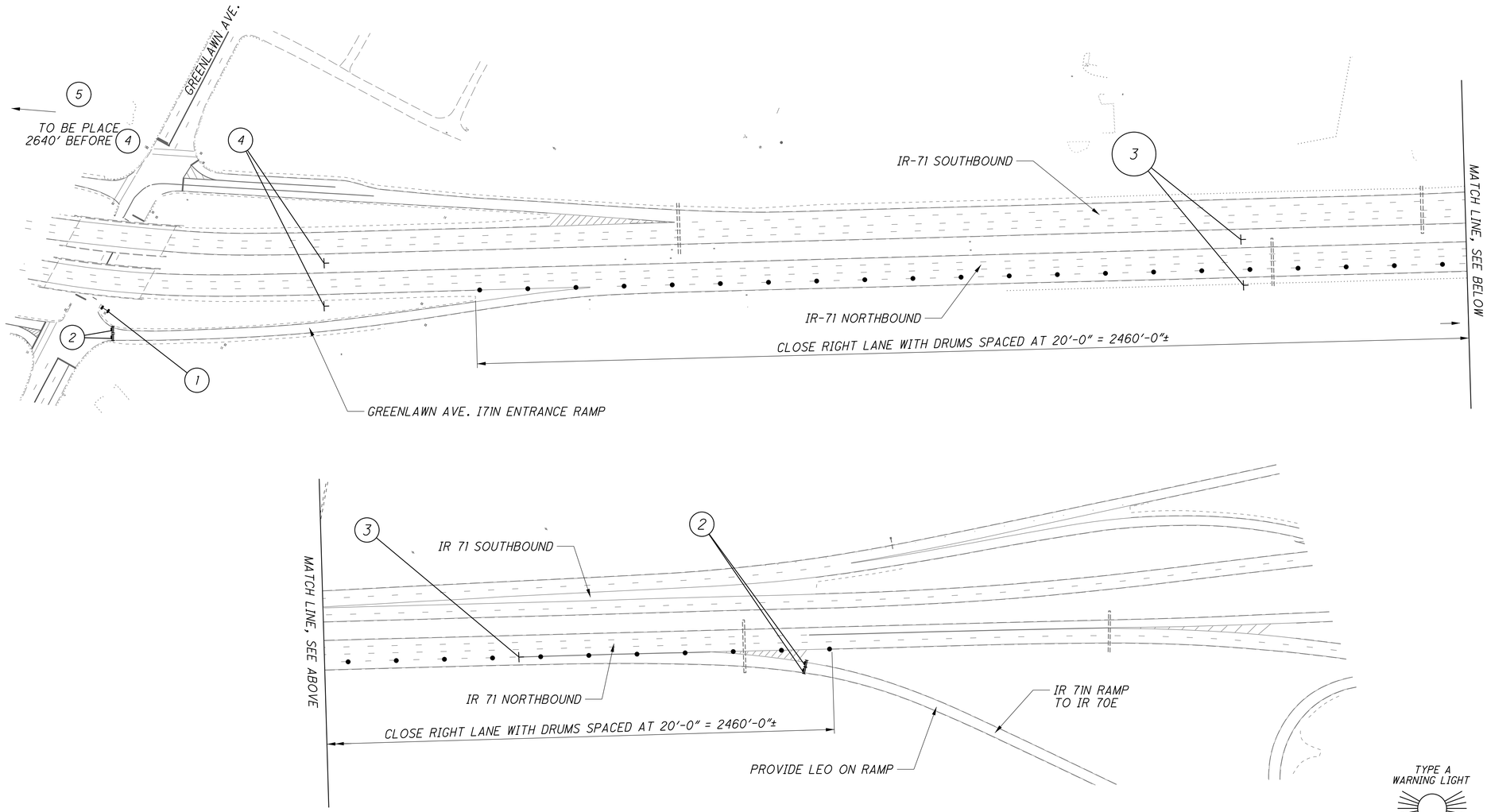

NOTES:

1. GREENLAWN AVENUE ENTRANCE RAMP IS PERMITTED TO CLOSE AT 10:00PM.
2. FOR DETOUR DETAILS FOR GREENLAWN AVENUE SEE SHEET 151E.
3. CLOSE GREENLAWN AVENUE ENTRANCE RAMP WITH TYPE 3 BARRICADES ACCORDING TO STANDARD CONSTRUCTION DRAWING MT-101.60.
4. CLOSE IR-71N RAMP TO IR-70E ACCORDING TO STANDARD CONSTRUCTION DRAWING MT-98.29.

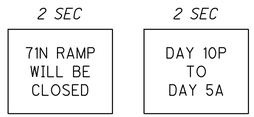

1

PCMS SIGN PLACED 5 DATS PRIOR TO CLOSURE

R11-2-48

MOUNTED ON TYPE 3 BARRICADES

2

E5-2a-48

3

E5-H2c-48

4

W20-1-48

5

MAINTENANCE OF TRAFFIC CLOSURE IR-71N RAMP

CALCULATED JPH
CHECKED GF

FRA-70-14.54

151A
2317

PLOT.CEL

ms consultants, inc.
msconsultants.com

www.msconsultants.com

Ohio DOT Workspace
70\71 East Interchange 2E

1" 0.5" 0

Batchplot Spec: \\msconsultants.com\files\Production\03\60\06634_2E\standards\plotdr\batchplt.spc
Pen Table: \\msconsultants.com\files\Standards\usth\ohdot\V8i\ms\plotting\pen\V8i_ms_std.tbl
Plot Driver: \\msconsultants.com\files\Standards\usth\ohdot\v8i\ms\plotting\PDF.pltcfg

PDF: ohdot\V8i
PLCF: 60-06634_2E_Columbus

Model: Sheet
Printed: 9/28/2018 @ 10:08:17 AM
File: \\msconsultants.com\files\Production\03\60\06634_2E\mot\sheets\105322MP8002.dgn

View: FENCE_VIEW1
By: kryan

34" x 22"

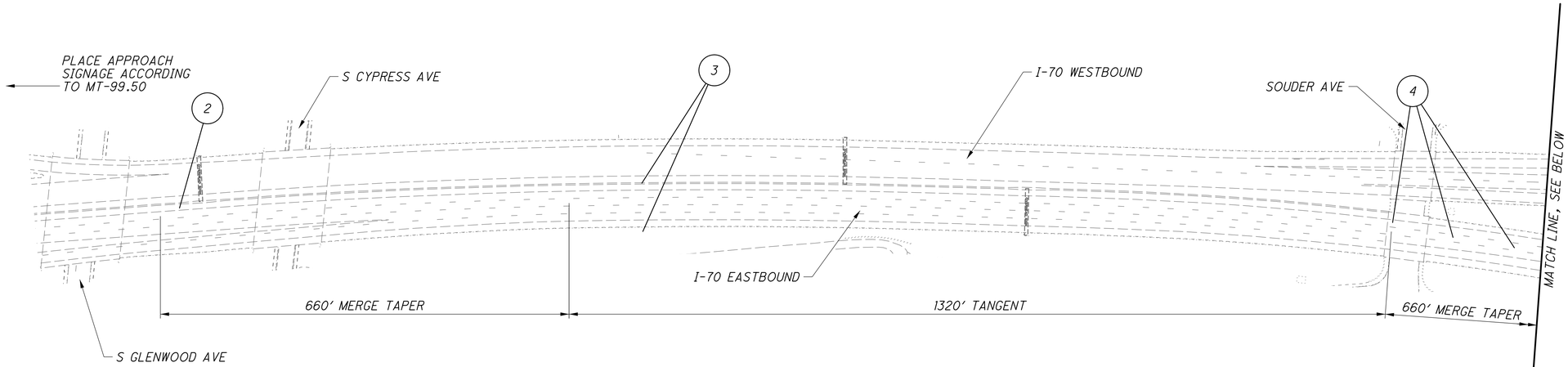

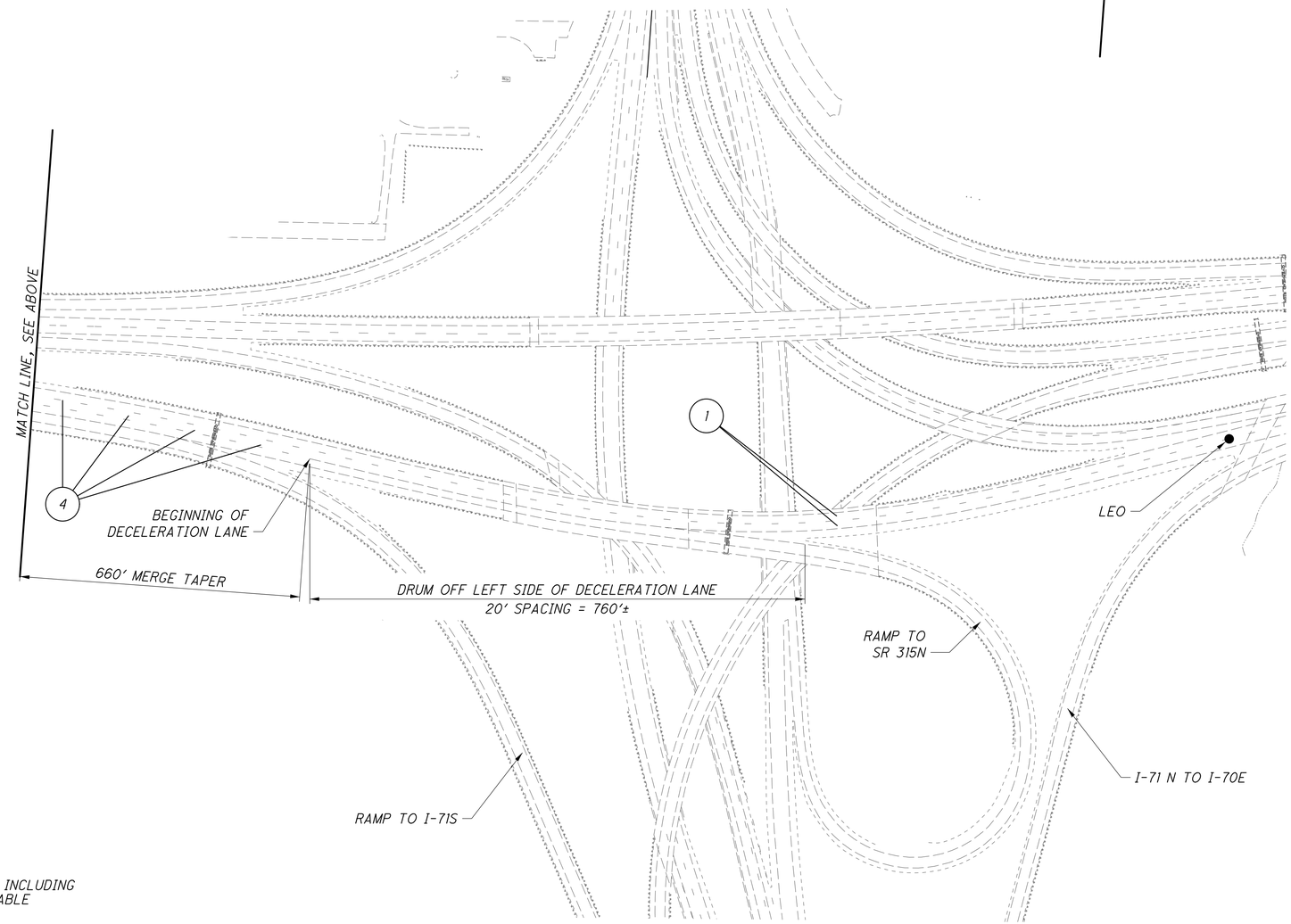

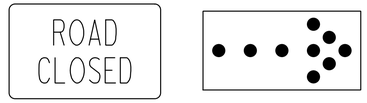

R11-2-48

1

ARROW BOARD

2

W4-2L-48

3

W1-H16-36

4

NOTES:

1. IR-70 MAY BE CLOSED AT 11PM.

2. THE CONTRACTOR SHALL REFER TO MT-99.50 FOR ADDITIONAL DETAILS INCLUDING REQUIRED SIGNAGE, DRUM SPACING, NOT DETAILED IN THESE PLANS. PORTABLE CONCRETE BARRIER IS NOT REQUIRED FOR FREEWAY CLOSURE.

CALCULATED JPH
CHECKED GF

MAINTENANCE OF TRAFFIC CLOSURE OF I-70E AT SR-315

FRA-70-14.54

151B
2317

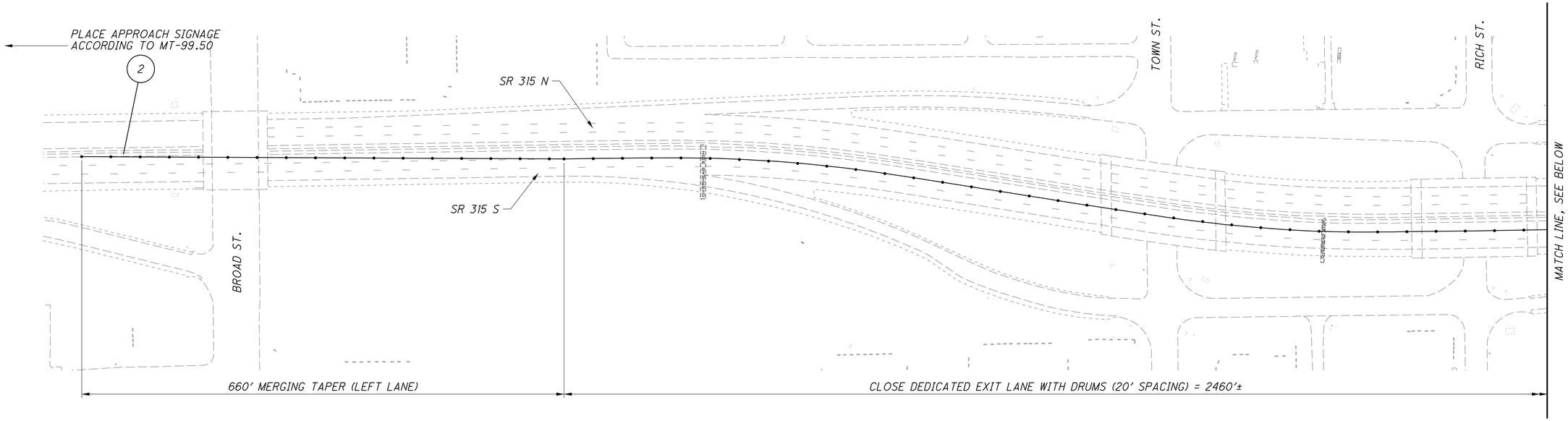

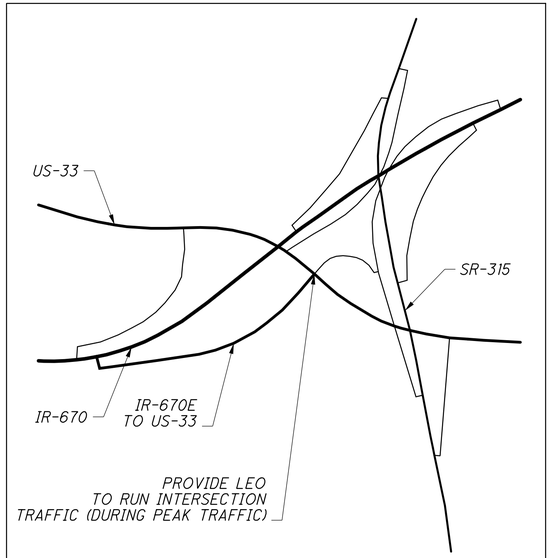

INTERSECTION OF IR-670 & US-33

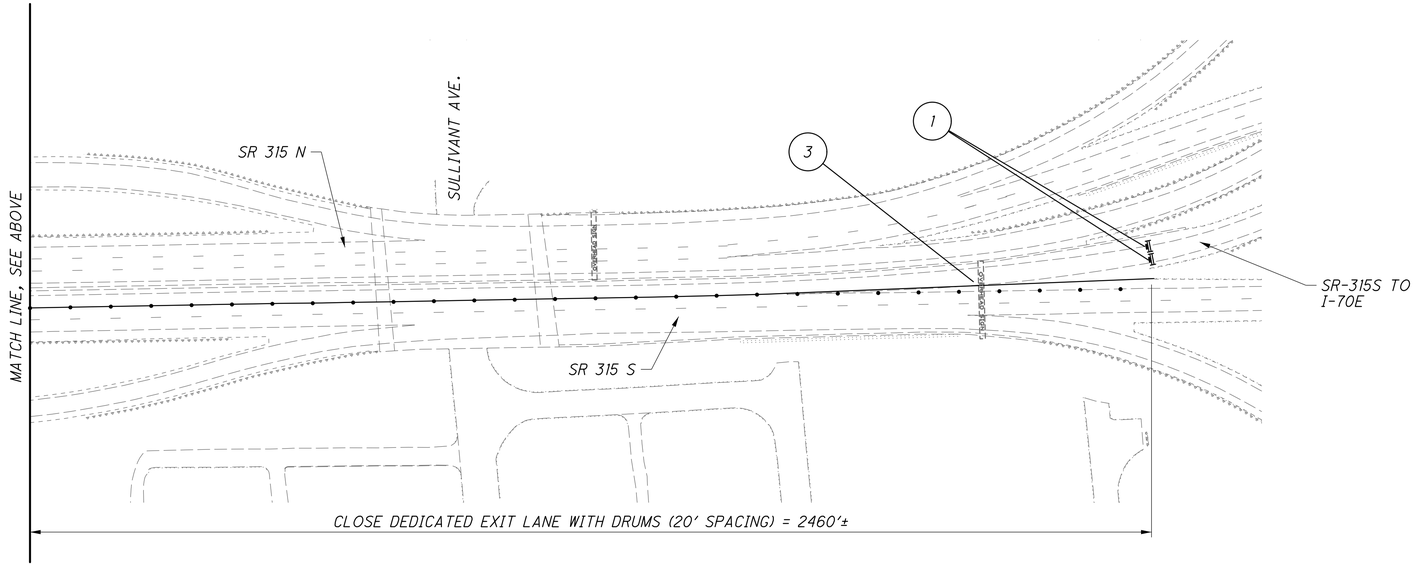

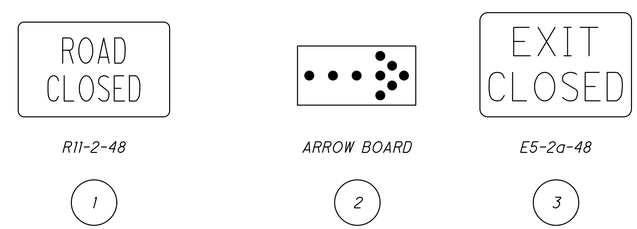

NOTES:

1. SR-315S RAMP TO I-70E MAY BE CLOSED AT 11PM.

2. THE CONTRACTOR SHALL REFER TO MT-98.29 & MT-95.30 FOR ADDITIONAL DETAILS INCLUDING REQUIRED SIGNAGE, DRUM SPACING, NOT DETAILED IN THESE PLANS.

CALCULATED JPH
CHECKED GF

MAINTENANCE OF TRAFFIC SR-315S RAMP TO IR-70E

FRA-70-14.54

151C
2317

PLOT.CEL
ms consultants, inc.
msconsultants.com
Ohio DOT Workspace
70\71 East Interchange 2E
www.msconsultants.com
Batchplot Spec: \\msconsultants.com\files\production\03\60\06634_2E\standards\plotdrv\batchplt.spc
Pen Table: \\msconsultants.com\files\Standards\ustn\ohdot\V8i\ms\plotting\pen\V8i_ms_std.tbl
Plot Driver: \\msconsultants.com\files\Standards\ustn\ohdot\v8i\ms\plotting\PDF.pltcfg
34" x 22"
Model: Sheet
Printed: 9/28/2018 @ 10:08:19 AM
File: \\msconsultants.com\files\Production\03\60\06634_2E\mot\sheets\105322MP8003.dgn
View: FENCE_VIEW1
By: kryan

PLOT.CEL

ms consultants, inc.
msconsultants.com

www.msconsultants.com

Ohio DOT Workspace
70\71 East Interchange 2E

0 1" 0.5"

Batchplot Spec: \\msconsultants.com\files\production\03\60\06634_2E\standards\plotdr\batchplt.spc
Pen Table: \\msconsultants.com\files\Standards\usth\ohdot\V8i\ms\plotting\pen\V8i_ms_std.tbl
Plot Driver: \\msconsultants.com\files\Standards\usth\ohdot\V8i\ms\plotting\PDF.pltcfg
PDF: ohdotV8i
DGN: 60-06634_2E_Columbus

Model: Sheet
Printed: 9/28/2018 @ 10:08:21 AM
File: \\msconsultants.com\files\Production\03\60\06634_2E\mot\sheets\105322MP8004.dgn
View: FENCE_VIEW1
By: kryan

34" x 22"

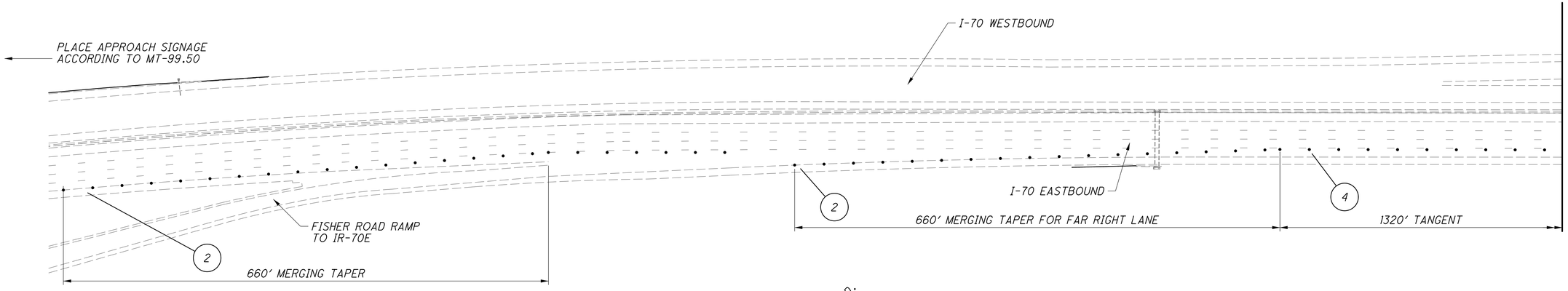

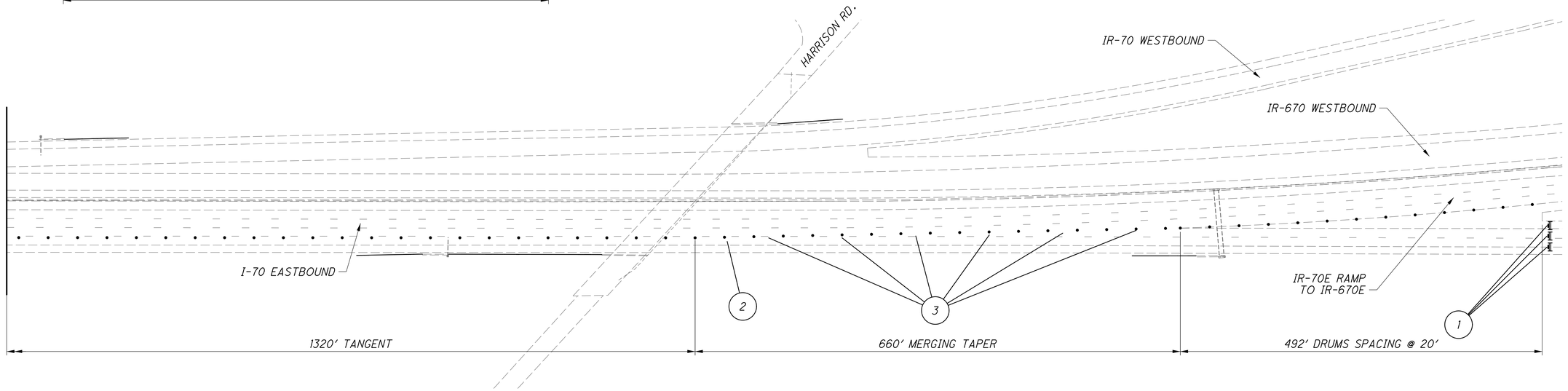

R11-2-48

1

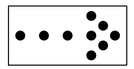

ARROW BOARD

2

W1-H16-36

3

W4-2R-48

4

NOTES:

1. IR-70E MAY BE CLOSED AT 11PM.

2. THE CONTRACTOR SHALL REFER TO MT-99.50 FOR ADDITIONAL DETAILS INCLUDING REQUIRED SIGNAGE, DRUM SPACING, NOT DETAILED IN THESE PLANS. PORTABLE CONCRETE BARRIER IS NOT REQUIRED FOR FREEWAY CLOSURE.

CALCULATED JPH
CHECKED GF

TRAFFIC CLOSURE IR-70E AT IR-670E

MAINTENANCE OF TRAFFIC

FRA-70-14.54

151D
2317

ms consultants, inc.

PLOT.CEL

ms consultants, inc.
msconsultants.com

Ohio DOT Workspace
70\71 East Interchange 2E

0 1" 0.5"

Batchplot Spec: \\msconsultants.com\files\production\03\60\06634_2E\standards\plotdrv\batchplt.spc
Pen Table: \\msconsultants.com\files\Standards\astm\ohdot\V8i\ms\plotting\pen\V8i_ms_std.tbl
Plot Driver: \\msconsultants.com\files\Standards\astm\ohdot\v8i\ms\plotting\PDF.pltcfg

34" x 22"

Model: Sheet
Printed: 9/28/2018 @ 10:08:22 AM
File: \\msconsultants.com\files\Production\03\60\06634_2E\mot\sheets\105322M01006A.dgn

View: FENCE_VIEW1
By: kryan

NORTH
M3-1-24
INTERSTATE 71
M1-1-36-2
DETOUR
M4-9L-30
1

NORTH
M3-1-24
INTERSTATE 71
M1-1-36-2
DETOUR
M4-9(C)-30
2

NORTH
M3-1-24
INTERSTATE 71
M1-1-36-2
DETOUR
M4-9R-MOD-30
3

NORTH
M3-1-24
INTERSTATE 71
M1-1-36-2
DETOUR
M4-9R-30
4

CALCULATED JPH
CHECKED GF

GREENLAWN AVE RAMP TO IR-71N

DETOUR PLAN

FRA-70-14.54

151E
2317

PLOT.CEL

ms consultants, inc.
msconsultants.com

Ohio DOT Workspace
70\71 East Interchange 2E
www.msconsultants.com

1"
0.5"
0

Batchplot Spec: \\msconsultants.com\files\production\03\60\06634_2E\standards\plotdrv\batchplt.spc
Pen Table: \\msconsultants.com\files\Standards\usth\ohdot\V8i\ms\plotting\pen\V8i_ms_std.tbl
Plot Driver: \\msconsultants.com\files\Standards\usth\ohdot\V8i\ms\plotting\PDF.pltcfg
PCF: ohdot\V8i
PCF: 60-06634_2E_Columbus

34" x 22"

Model: Sheet
Printed: 9/28/2018 @ 10:08:24 AM
File: N:\03\60\06634_2E\mot\sheets\1153220MD005.dgn
View: FENCE_VIEW1
By: kryan

MESSAGES FOR PORTABLE CHANGEABLE MESSAGE SIGNS

FIRST LINE TO BE DAY OF WEEK (2 SEC)	(2 SEC)	
70W/71S CLOSES AT GRANT	XXXXX 11PM TO 5AM	(1)*
71S/70W CLOSES	XXXXX 11PM TO 5AM	(2)*
I-70 WB TRAFFIC	USE 71N TO 670W	(1)
71S/70W TRAFFIC	USE 670W TO 315S	(2)
71S/70W TRAFFIC	USE 315S TO 70W/71S	(3)
70W/71S TRAFFIC	USE 670W TO 315S	(4)

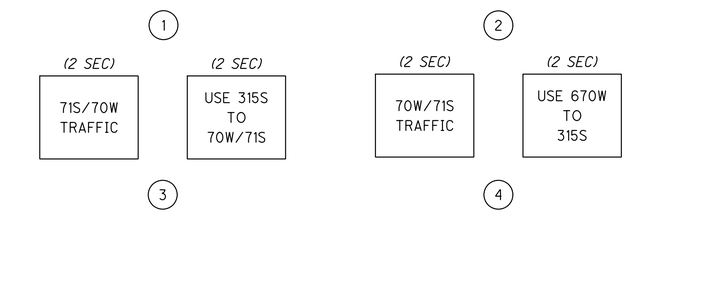

10' TYPE 3 SOLID BARRICADES
(PLACED ACROSS ENTIRE ROADWAY)

(6)

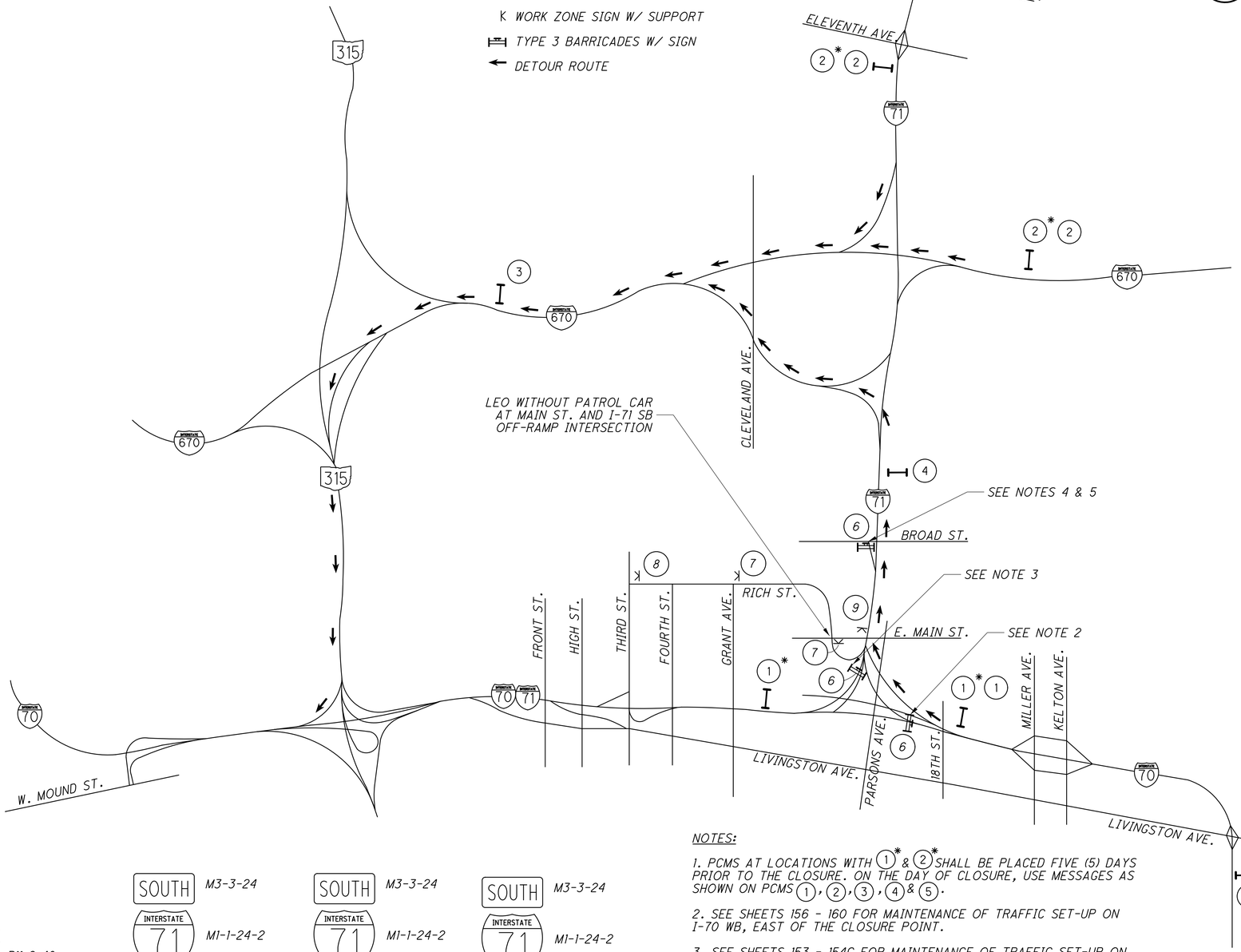

SOUTH	M3-3-24	(7)
INTERSTATE 71	M1-1-24-2	
WEST	M3-4-24	
INTERSTATE 70	M1-1-24-2	
DETOUR	M4-H9T-30	

SOUTH	M3-3-24	(8)
INTERSTATE 71	M1-1-24-2	
WEST	M3-4-24	
INTERSTATE 70	M1-1-24-2	
DETOUR	M4-9L-30	

SOUTH	M3-3-24	(9)
INTERSTATE 71	M1-1-24-2	
WEST	M3-4-24	
INTERSTATE 70	M1-1-24-2	
DETOUR	M4-9R(MOD)-30	

NOTES:

1. PCMS AT LOCATIONS WITH (1)* & (2)* SHALL BE PLACED FIVE (5) DAYS PRIOR TO THE CLOSURE. ON THE DAY OF CLOSURE, USE MESSAGES AS SHOWN ON PCMS (1), (2), (3), (4) & (5).

2. SEE SHEETS 156 - 160 FOR MAINTENANCE OF TRAFFIC SET-UP ON I-70 WB, EAST OF THE CLOSURE POINT.

3. SEE SHEETS 153 - 154C FOR MAINTENANCE OF TRAFFIC SET-UP ON I-71 SB, NORTH OF THE CLOSURE POINT.

4. THIS DETOUR SHALL BE UTILIZED DURING THE REMOVAL OR INSTALLATION OF BEAMS ON STRUCTURES, REMOVAL OR INSTALLATION OF OVERHEAD SIGN SUPPORT TRUSSES, OVERHEAD SIGN SUPPORT CANTILEVERS, OVERHEAD SIGNS OR OVERLAYS, OR AS DIRECTED BY THE ENGINEER TO COMPLETE OTHER CONSTRUCTION ACTIVITIES WHICH CANNOT BE COMPLETED THROUGH THE USE OF SINGLE LANE OR SHOULDER CLOSURES AND WHICH REQUIRE CLOSURE OF I-70 WB AND SHALL ONLY BE PERMITTED FROM 11:00 P.M. TO 5:00 A.M., DAILY.

5. THE EB RIGHT TURN LANE FROM BROAD STREET TO I-71 SB, SEE SHEET 155 FOR MAINTENANCE OF TRAFFIC SETUP ON BROAD STREET.

CALCULATED JAH
CHECKED JML

TYPICAL DETOUR - I-70 WB CLOSURE AT I-71

FRA-70-14.54

ms consultants, inc.

PLOT.CEL

ms consultants, inc.
msconsultants.com

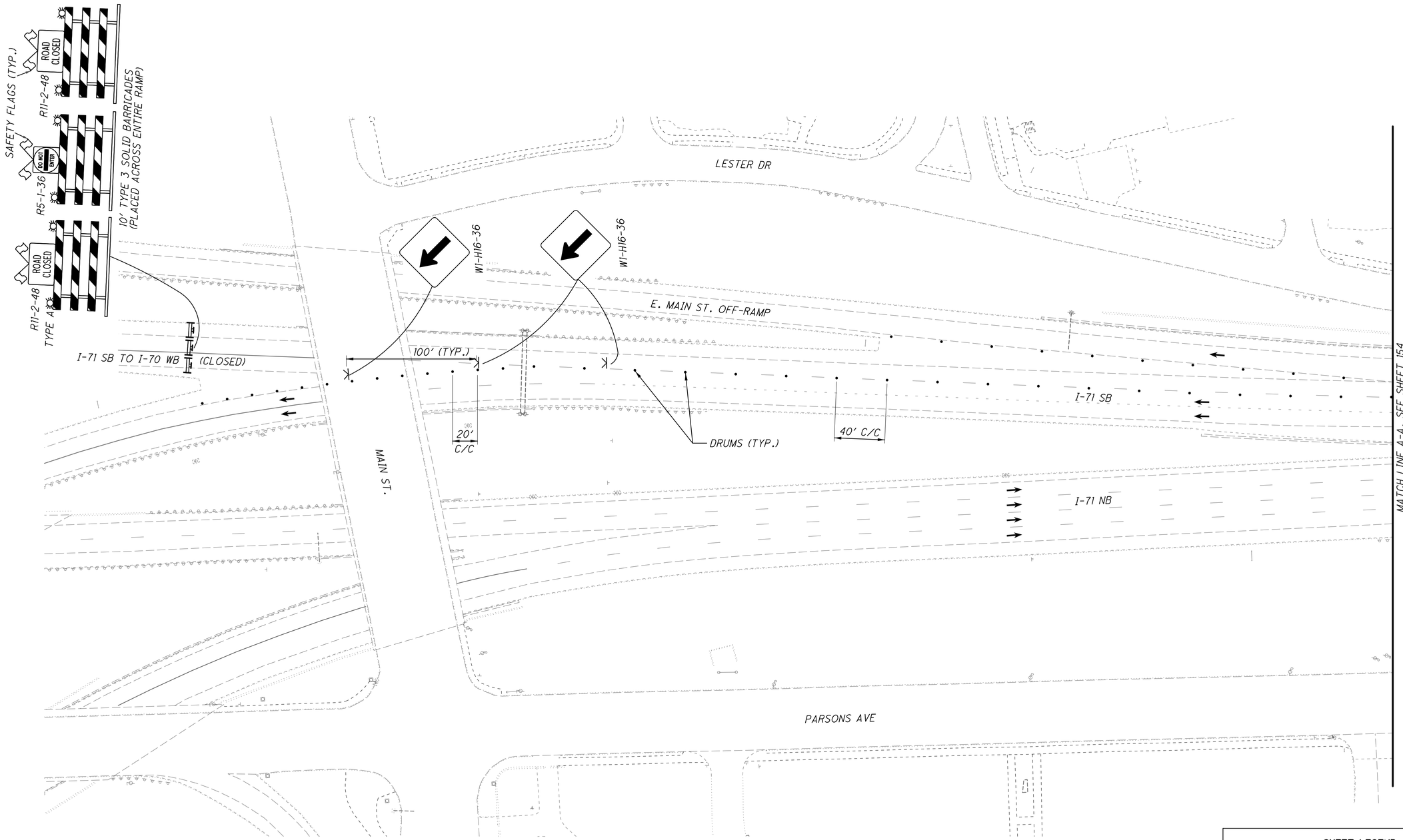

NOTES:

1. SEE SHEET 152 FOR DETOUR SIGNING AND PCMS LOCATIONS AND MESSAGES DURING CLOSURE.

SHEET LEGEND

- TEMPORARY PAVEMENT PLACED PRIOR TO THIS PHASE
- TEMPORARY PAVEMENT PLACED DURING THIS PHASE
- WORK AREA

FOR COMPLETE LEGEND AND DRUM SPACING CHART, SEE SHEET 156

HORIZONTAL SCALE IN FEET
0 20 40 80

CALCULATED JAH
CHECKED JML

MAINTENANCE OF TRAFFIC
TYPICAL DETAILS- I-71 SB TO I-70 WB CLOSURE

FRA-70-14.54

153
2317

Batchplot Spec: \\msconsultants.com\Files\Production\03\60\06634.2E\standards\plotdrv\batchplt.spc
Pen Table: \\msconsultants.com\Files\Standards\usth\ohdot\V8i\ms\plotting\pen\V8i_ms_std.tbl
Plot Driver: \\msconsultants.com\Files\Standards\usth\ohdot\V8i\ms\plotting\PDF.pltcfg
Model: Sheet View: FENCE_VIEW1
Printed: 9/28/2018 @ 10:08:31 AM By: kryan
File: \\msconsultants.com\Files\Production\03\60\06634.2E\mot\sheets\105322MP1025.dgn
34" x 22"
Ohio DOT Workspace
70\71 East Interchange 2E
DGN: ohdot\V8i
PCF: 60-06634_2E_Columbus
www.msconsultants.com

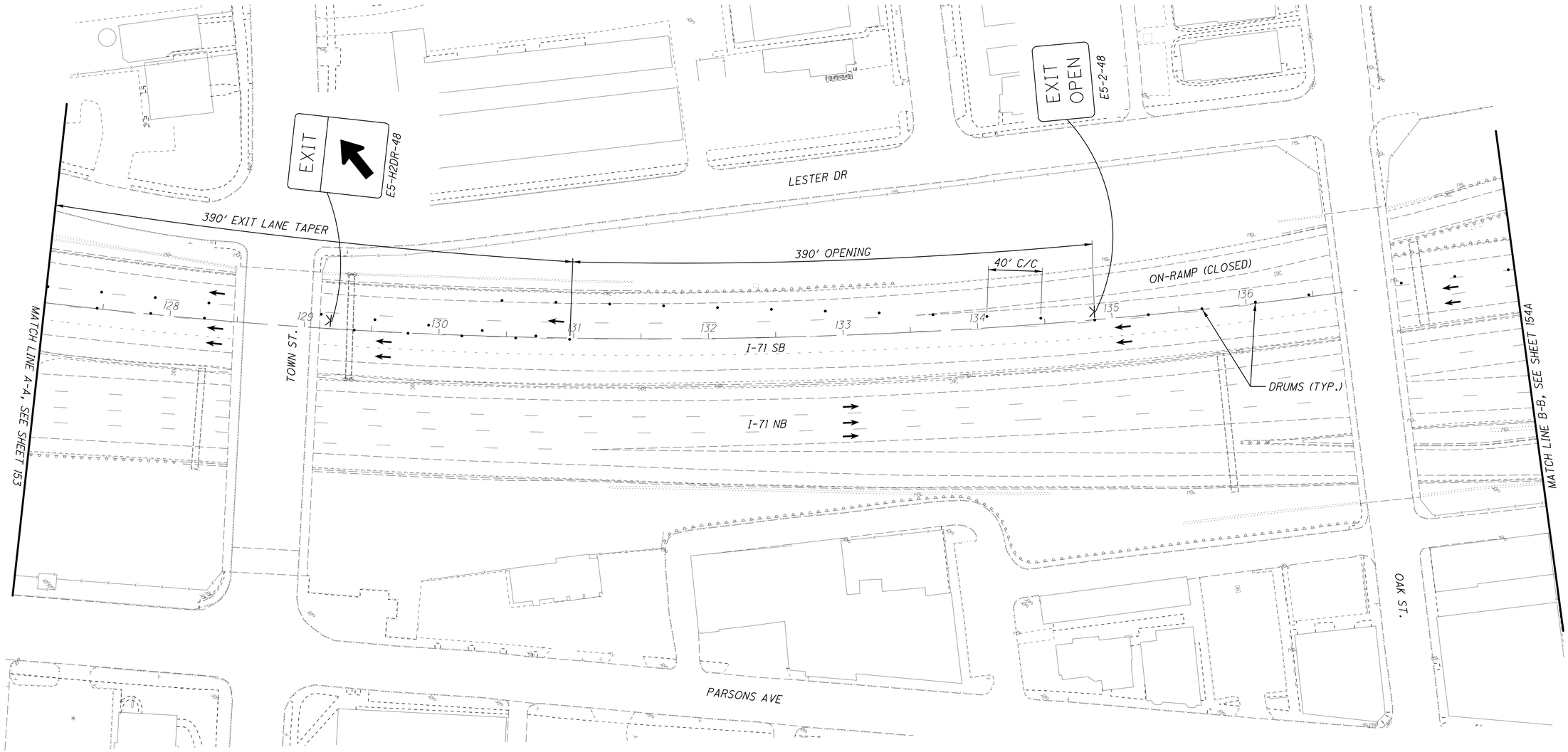

NOTES:

1. SEE SHEET 152 FOR DETOUR SIGNING AND PCMS LOCATIONS AND MESSAGES DURING CLOSURE.

SHEET LEGEND

- TEMPORARY PAVEMENT PLACED PRIOR TO THIS PHASE
- TEMPORARY PAVEMENT PLACED DURING THIS PHASE
- WORK AREA

FOR COMPLETE LEGEND AND DRUM SPACING CHART, SEE SHEET 156

0 20 40 80
HORIZONTAL SCALE IN FEET

CALCULATED JAH
CHECKED JML

MAINTENANCE OF TRAFFIC
TYPICAL DETAILS- I-71 SB TO I-70 WB CLOSURE

FRA-70-14.54

PLOT.CEL
ms consultants, inc.
msconsultants.com
Ohio DOT Workspace
70\71 East Interchange 2E
www.msconsultants.com
Batchplot Spec: \\msconsultants.com\files\production\03\60\06634_2E\standards\plotdrv\batchplt.spec
Pen Table: \\msconsultants.com\files\Standards\ustn\ohdot\V8i\ms\plotting\pen\V8i_ms_std.tbl
Plot Driver: \\msconsultants.com\files\Standards\ustn\ohdot\V8i\ms\plotting\PDF.pltcfg
34" x 22"
Model: Sheet View: FENCE_VIEW1
Printed: 9/28/2018 @ 10:08:35 AM By: kryan
File: \\msconsultants.com\files\Production\03\60\06634_2E\mot\sheets\105322MP1026.dgn
ms consultants, inc.

PLOT.CEL

ms consultants, inc.
msconsultants.com

www.msconsultants.com

Ohio DOT Workspace
70\71 East Interchange 2E

Batchplot Spec: \\msconsultants.com\files\production\03\60\06634.2E\standards\plotdr\batchplt.spc
Pen Table: \\msconsultants.com\files\Standards\ustn\ohdot\V8i\ms\plotting\pen\V8i_ms_std.tbl
Plot Driver: \\msconsultants.com\files\Standards\ustn\ohdot\V8i\ms\plotting\PDF.pltcfg
PCF: ohdot\V8i
PCF: 60-06634_2E_Columbus

Model: Sheet
Printed: 9/28/2018 @ 10:08:38 AM
File: \\msconsultants.com\files\Production\03\60\06634.2E\mot\sheets\105322MP1030.dgn
View: FENCE_VIEW1
By: kryan

34" x 22"

NOTES:

1. THE PROPOSED MAPPING OF THE I-71 & I-670 INTERCHANGE CONSTRUCTION, PROJECT FRA-71-17.76, IS NOT BASED UPON AN ACTUAL FIELD SURVEY AND IS SHOWN FOR REFERENCE ONLY. THIS MAPPING IS SUBJECT TO CHANGE PRIOR TO COMPLETION OF SAID PROJECT. MAINTENANCE OF TRAFFIC DEVICES SHOWN ON THESE SHEETS MAY REQUIRE ADJUSTMENT TO FIT THE FINAL FIELD CONDITIONS. ANY ADJUSTMENTS SHALL BE APPROVED BY THE ENGINEER.

2. SEE SHEET 152 FOR DETOUR SIGNING AND PCMS LOCATIONS AND MESSAGES DURING CLOSURE.

3. WORKZONE PAVEMENT MARKINGS SHOWN FOR REFERENCE ONLY. SEE INDIVIDUAL MOT PHASE PLAN SHEETS FOR DETAILS.

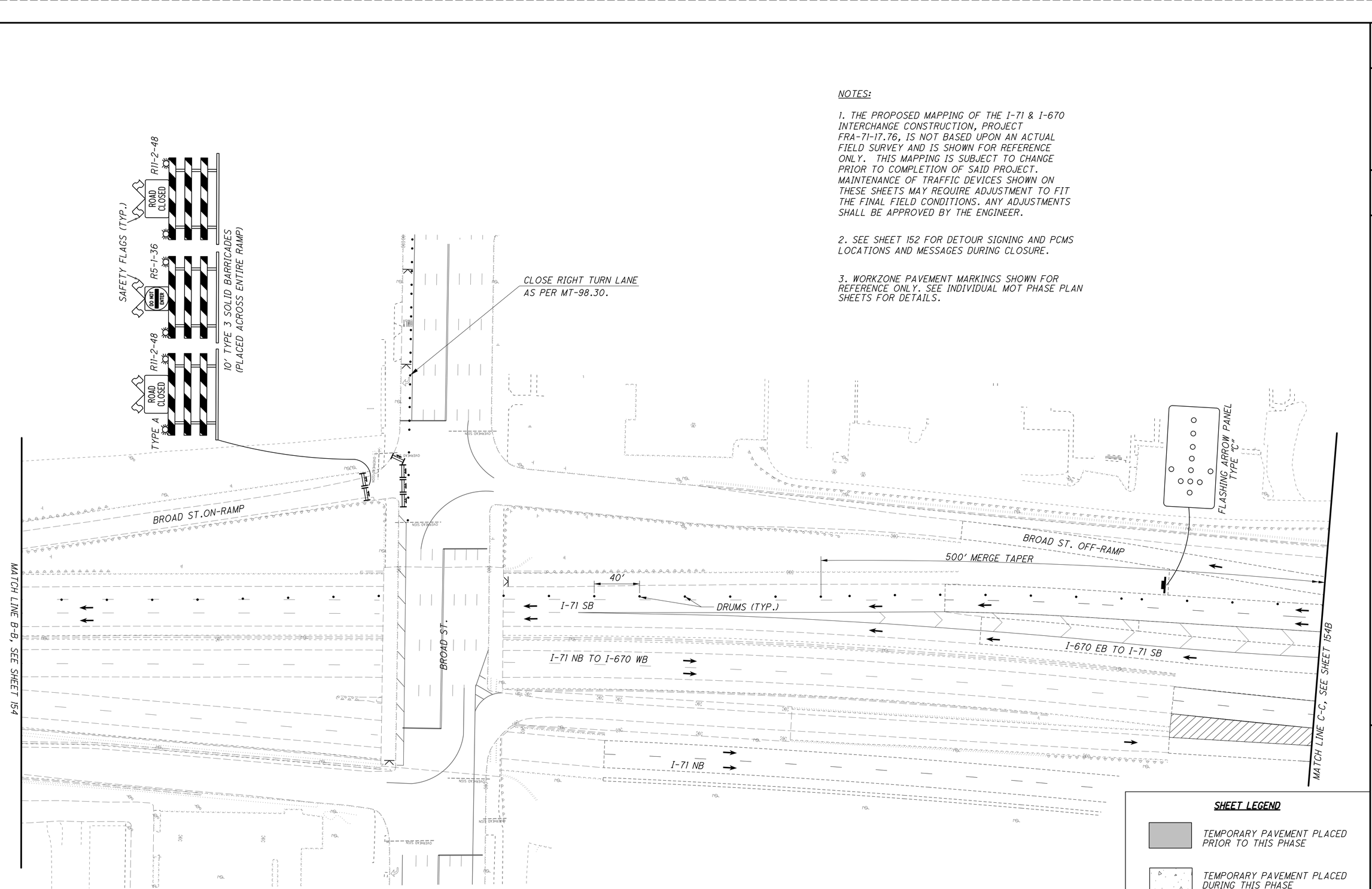

SHEET LEGEND

- TEMPORARY PAVEMENT PLACED PRIOR TO THIS PHASE
- TEMPORARY PAVEMENT PLACED DURING THIS PHASE
- WORK AREA

FOR COMPLETE LEGEND AND DRUM SPACING CHART, SEE SHEET 156

HORIZONTAL SCALE IN FEET
0 20 40 80

CALCULATED JAH
CHECKED JML

MAINTENANCE OF TRAFFIC
TYPICAL DETAILS- I-71 SB TO I-70 WB CLOSURE

FRA-70-14.54

154A
2317

PLOT.CEL

ms consultants, inc.
msconsultants.com

Ohio DOT Workspace
70\71 East Interchange 2E

www.msconsultants.com

0 0.5" 1"

Batchplot Spec: \\msconsultants.com\Files\Production\03\60\06634.2E\standards\plotdr\batchplt.spc
Pen Table: \\msconsultants.com\Files\Standards\ustn\ohdot\V8i\ms\plotting\pen\V8i_ms_std.tbl PCF: ohdotV8i
Plot Driver: \\msconsultants.com\Files\Standards\ustn\ohdot\V8i\ms\plotting\PDF.pltcfg PCF: 60-06634_2E_Columbus

Model: Sheet View: FENCE_VIEW1
Printed: 9/28/2018 @ 10:08:40 AM By: kryan
File: \\msconsultants.com\Files\Production\03\60\06634.2E\mot\sheets\105322MP1028.dgn

34" x 22"

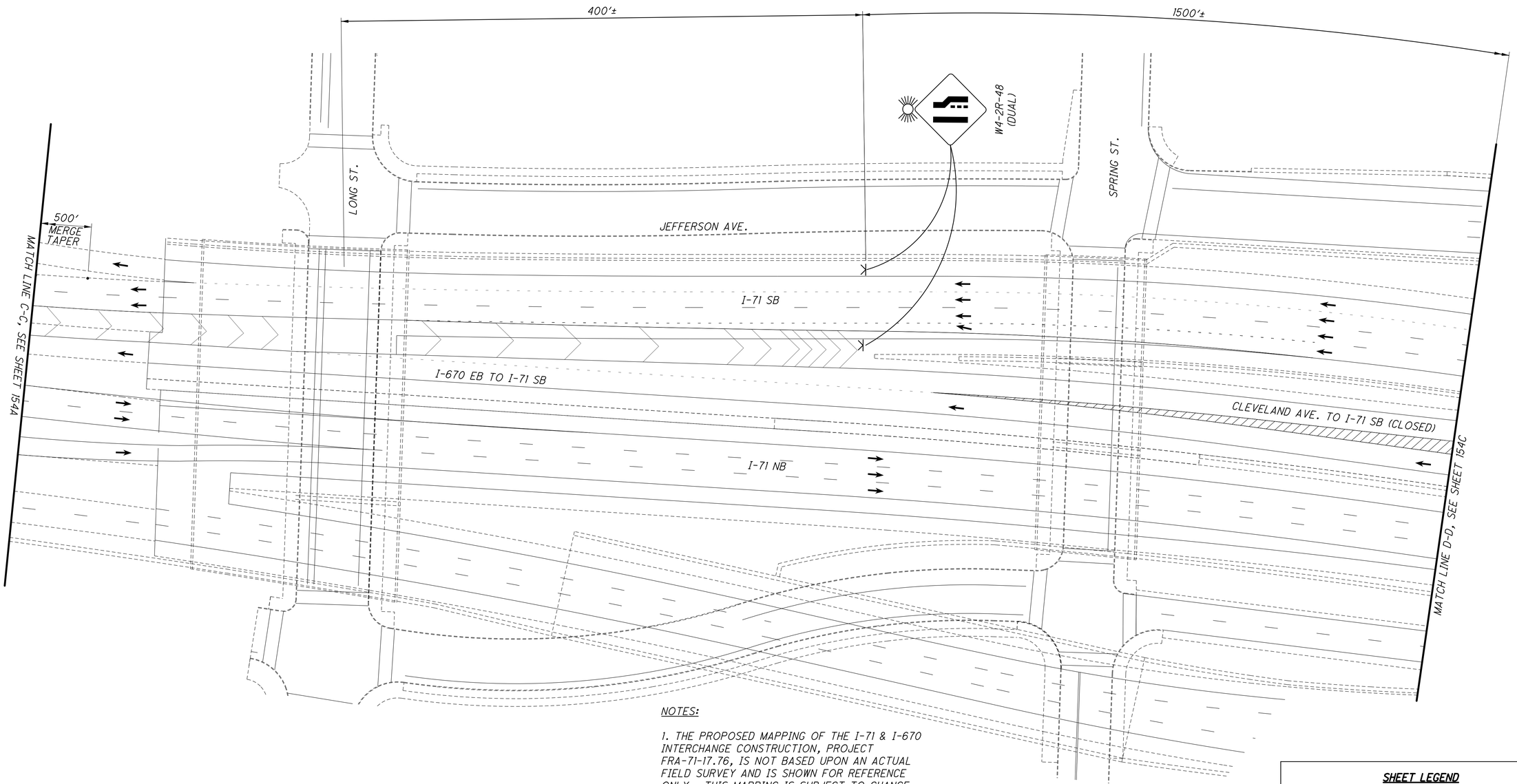

NOTES:

1. THE PROPOSED MAPPING OF THE I-71 & I-670 INTERCHANGE CONSTRUCTION, PROJECT FRA-71-17.76, IS NOT BASED UPON AN ACTUAL FIELD SURVEY AND IS SHOWN FOR REFERENCE ONLY. THIS MAPPING IS SUBJECT TO CHANGE PRIOR TO COMPLETION OF SAID PROJECT. MAINTENANCE OF TRAFFIC DEVICES SHOWN ON THESE SHEETS MAY REQUIRE ADJUSTMENT TO FIT THE FINAL FIELD CONDITIONS. ANY ADJUSTMENTS SHALL BE APPROVED BY THE ENGINEER.

2. SEE SHEET 152 FOR DETOUR SIGNING AND PCMS LOCATIONS AND MESSAGES DURING CLOSURE.

3. WORKZONE PAVEMENT MARKINGS SHOWN FOR REFERENCE ONLY. SEE INDIVIDUAL MOT PHASE PLAN SHEETS FOR DETAILS.

SHEET LEGEND

- TEMPORARY PAVEMENT PLACED PRIOR TO THIS PHASE
- TEMPORARY PAVEMENT PLACED DURING THIS PHASE
- WORK AREA

FOR COMPLETE LEGEND AND DRUM SPACING CHART, SEE SHEET 156

0 20 40 80 HORIZONTAL SCALE IN FEET

CALCULATED JAH CHECKED JML

MAINTENANCE OF TRAFFIC
TYPICAL DETAILS- I-71 SB TO I-70 WB CLOSURE

FRA-70-14.54

154B
2317

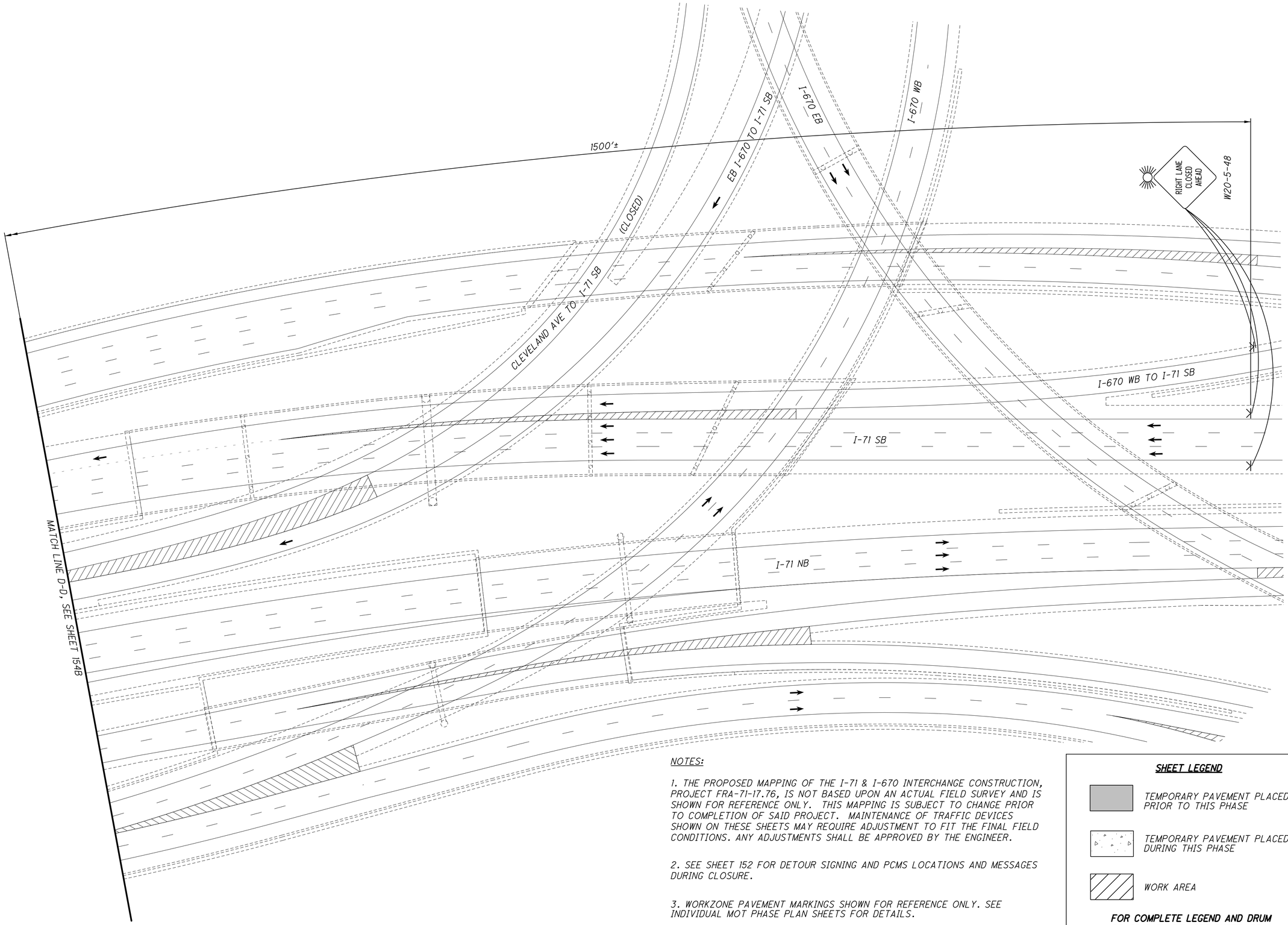

NOTES:

1. THE PROPOSED MAPPING OF THE I-71 & I-670 INTERCHANGE CONSTRUCTION, PROJECT FRA-71-17.76, IS NOT BASED UPON AN ACTUAL FIELD SURVEY AND IS SHOWN FOR REFERENCE ONLY. THIS MAPPING IS SUBJECT TO CHANGE PRIOR TO COMPLETION OF SAID PROJECT. MAINTENANCE OF TRAFFIC DEVICES SHOWN ON THESE SHEETS MAY REQUIRE ADJUSTMENT TO FIT THE FINAL FIELD CONDITIONS. ANY ADJUSTMENTS SHALL BE APPROVED BY THE ENGINEER.

2. SEE SHEET 152 FOR DETOUR SIGNING AND PCMS LOCATIONS AND MESSAGES DURING CLOSURE.

3. WORKZONE PAVEMENT MARKINGS SHOWN FOR REFERENCE ONLY. SEE INDIVIDUAL MOT PHASE PLAN SHEETS FOR DETAILS.

SHEET LEGEND

TEMPORARY PAVEMENT PLACED PRIOR TO THIS PHASE

TEMPORARY PAVEMENT PLACED DURING THIS PHASE

WORK AREA

FOR COMPLETE LEGEND AND DRUM SPACING CHART, SEE SHEET 156

0 20 40 80
HORIZONTAL SCALE IN FEET

CALCULATED JAH
CHECKED JML

MAINTENANCE OF TRAFFIC
TYPICAL DETAILS- I-71 SB TO I-70 WB CLOSURE

FRA-70-14.54

PLOT.CEL
ms consultants, inc.
msconsultants.com
Ohio DOT Workspace
70\71 East Interchange 2E
www.msconsultants.com
Batchplot Spec: \\msconsultants.com\files\production\03\60\06634_2E\standards\plotdrv\batchplt.spc
Pen Table: \\msconsultants.com\files\Standards\ustn\ohdot\V8i\ms\plotting\pen\V8i_ms_std.tbl
Plot Driver: \\msconsultants.com\files\Standards\ustn\ohdot\v8i\ms\plotting\PDF.pltcfg
34" x 22"
View: FENCE_VIEW1
By: kryan
Model: Sheet
Printed: 9/28/2018 @ 10:08:42 AM
File: \\msconsultants.com\files\Production\03\60\06634_2E\mot\sheets\105322MP1029.dgn
ms consultants, inc.

34" x 22"
Model: Sheet View: FENCE_VIEW1
Printed: 9/28/2018 @ 10:08:45 AM By: kryan
File: N:\03\60\06634_2E\mot\sheets\105322MP1027.dgn
Batchplot Spec: \\msconsultants.com\files\production\03\60\06634_2E\standards\plotdrv\batchplt.spc
Pen Table: \\msconsultants.com\files\Standards\ustn\ohdot\V8i\ms\plotting\pen\V8i_ms_std.tbl
Plot Driver: \\msconsultants.com\files\Standards\ustn\ohdot\v8i\ms\plotting\PDF.pltcfg
PCF: ohdotV8i
PCF: 60-06634_2E_Columbus
Ohio DOT Workspace
70\71 East Interchange 2E
www.msconsultants.com
ms consultants, inc.
msconsultants.com
PLOT.CEL

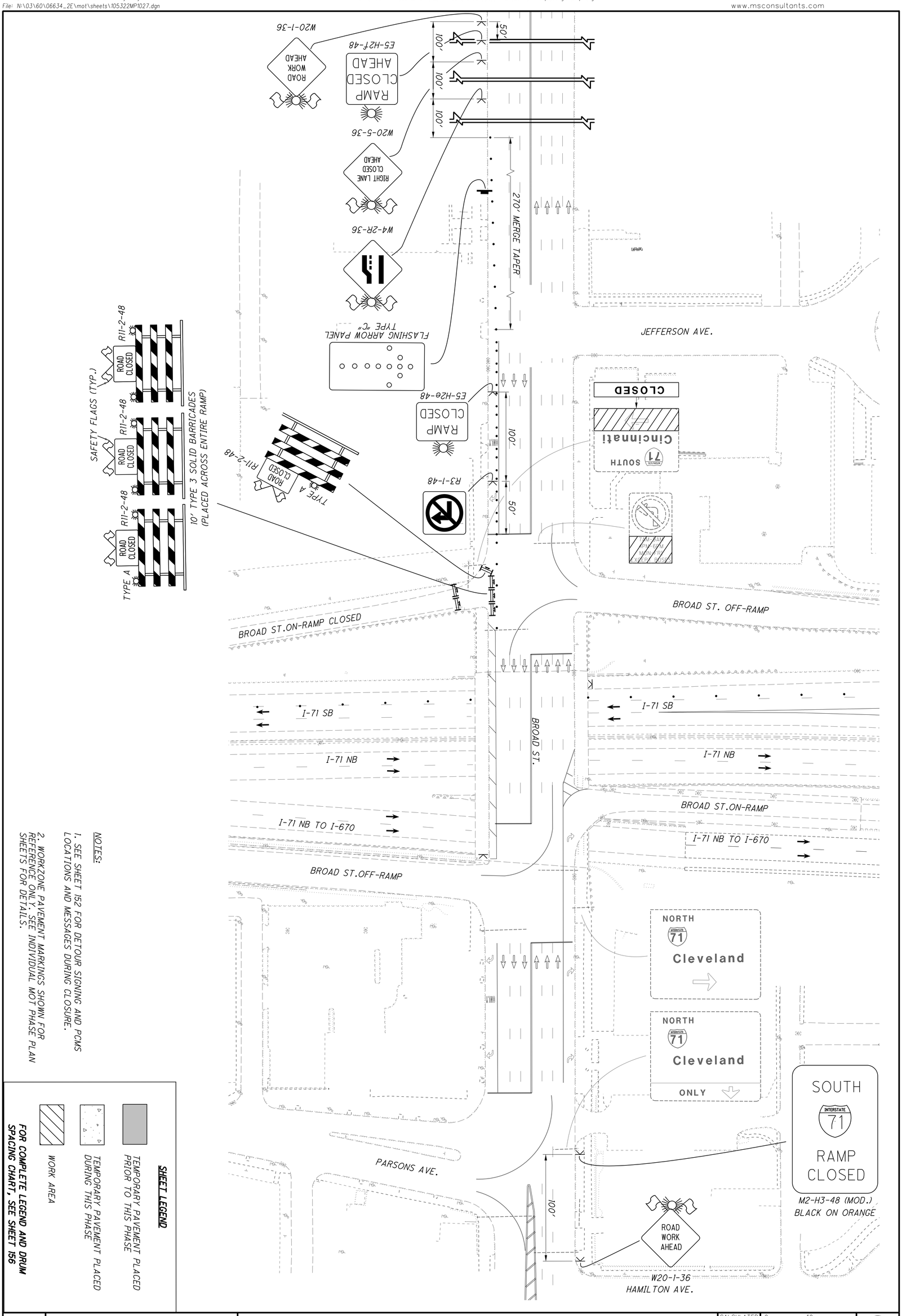

NOTES:

1. SEE SHEET 152 FOR DETOUR SIGNING AND PCMS LOCATIONS AND MESSAGES DURING CLOSURE.
2. WORKZONE PAVEMENT MARKINGS SHOWN FOR REFERENCE ONLY. SEE INDIVIDUAL MOT PHASE PLAN SHEETS FOR DETAILS.

SHEET LEGEND

- TEMPORARY PAVEMENT PLACED PRIOR TO THIS PHASE
- TEMPORARY PAVEMENT PLACED DURING THIS PHASE
- WORK AREA

FOR COMPLETE LEGEND AND DRUM SPACING CHART, SEE SHEET 156

155 / 2317	FRA-70-14.54	MAINTENANCE OF TRAFFIC BROAD ST. ON-RAMP TO I-71 SB CLOSURE	CALCULATED JAH CHECKED JML	0 20 40 80 HORIZONTAL SCALE IN FEET

LEGEND

- WORK ZONE SIGN
- LANE SEPARATOR WITH REBOUNDABLE POSTS
- PORTABLE BARRIER
- WORK ZONE IMPACT ATTENUATOR
- TYPE "A" WARNING LIGHT
- DRUMS
- TYPE 3 BARRICADE W/ SIGN
- TYPE 3 BARRICADE
- WATER FILLED BARRIER
- TRAFFIC FLOW ARROW (FOR REFERENCE ONLY)
- WORK AREA
- PAVEMENT FOR MAINTAINING TRAFFIC, CLASS A OR CLASS B

- YE WORK ZONE PAVEMENT MARKING, MISC.: EDGE LINE, YELLOW, 6"
- WE WORK ZONE PAVEMENT MARKING, MISC.: EDGE LINE, WHITE, 6"
- LL WORK ZONE PAVEMENT MARKING, MISC.: LANE LINE, 6"
- CH WORK ZONE PAVEMENT MARKING, MISC.: CHANNELIZING LINE, 10"
- SL WORK ZONE STOP LINE, CLASS I
- WD WORK ZONE PAVEMENT MARKING, MISC.: DOTTED LINE, WHITE, 6"
- A WORK ZONE LANE ARROW, CLASS I
- RS WORK ZONE PAVEMENT MARKING, MISC.: ROUTE SHIELDS
- TR WORK ZONE PAVEMENT MARKING, MISC.: TRANSVERSE LINE, WHITE, 24"
- W WORK ZONE PAVEMENT MARKING, MISC.: WORD ON PAVEMENT, 96"
- YE WORK ZONE PAVEMENT MARKING, MISC.: EDGE LINE, YELLOW, 5"
- WE WORK ZONE PAVEMENT MARKING, MISC.: EDGE LINE, WHITE, 5"
- DY WORK ZONE PAVEMENT MARKING, MISC.: CENTER LINE, SOLID DOUBLE, YELLOW, 5"
- LL WORK ZONE PAVEMENT MARKING, MISC.: LANE LINE, 5"
- CH WORK ZONE PAVEMENT MARKING, MISC.: CHANNELIZING LINE, 10"
- SL WORK ZONE PAVEMENT MARKING, MISC.: STOP LINE, 20"
- WD WORK ZONE PAVEMENT MARKING, MISC.: DOTTED LINE, WHITE, 5"

DRUM SPACING CHART

LOCATION	I-70/I-71/RAMPS	URBAN STREETS
TANGENT SECTION	40 FT.	20 FT.
TAPERS	40 FT.	20 FT.
WORK AREA WITHOUT DRIVES	N/A	20 FT.
WORK AREA WITH DRIVES	N/A	10 FT.
CLOSED DRIVEWAY	N/A	6 FT.
INTERSECTION RADII	N/A	10 FT.
RAMPS	20 FT.	N/A

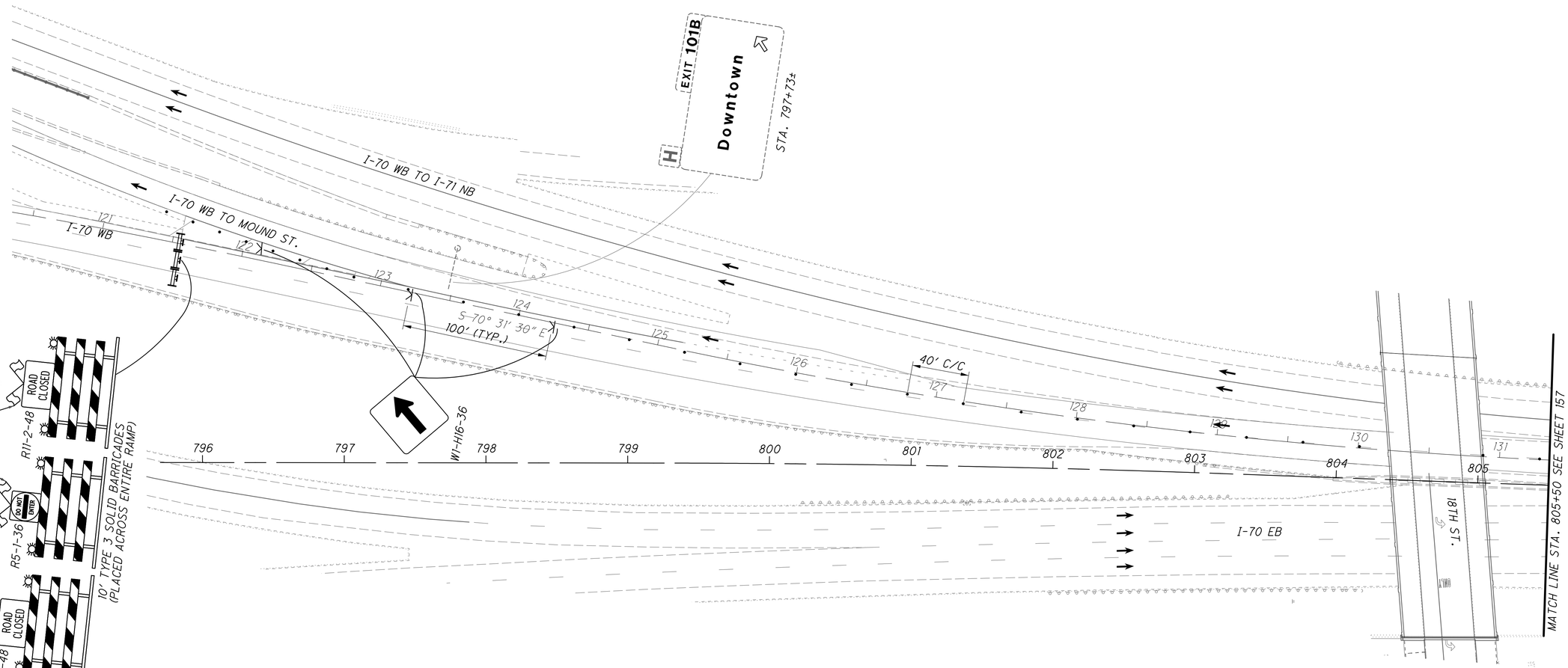

HORIZONTAL SCALE IN FEET 0 20 40 80

CALCULATED JAH
CHECKED JML

MAINTENANCE OF TRAFFIC
TYPICAL - I-70 WB CLOSURE

FRA-70-14.54

PLOT.CEL
ms consultants, inc.
msconsultants.com
Ohio DOT Workspace
70\71 East Interchange 2E
www.msconsultants.com
Batchplot Spec: \\msconsultants.com\files\production\03\60\06634_2E\standards\plotdrv\batchplt.spec
Pen Table: \\msconsultants.com\files\Standards\ustn\ohdot\V8i\ms\plotting\pen\V8i_ms_std.tbl
Plot Driver: \\msconsultants.com\files\Standards\ustn\ohdot\v8i\ms\plotting\PDF.pltcfg
34" x 22"
Model: Sheet
Printed: 9/28/2018 @ 10:08:49 AM
File: N:\03\60\06634_2E\mot\sheets\105322MP3018.dgn
View: FENCE_VIEW1
By: kryan
ms consultants, inc.

34" x 22"
Model: Sheet View: FENCE_VIEW1
Printed: 9/28/2018 @ 10:08:52 AM By: kryan
File: N:\03\60\06634_2E\mot\sheets\105322MP1023.dgn
Batchplot Spec: \\msconsultants.com\files\production\03\60\06634_2E\standards\plotdrv\batchplt.spc
Pen Table: \\msconsultants.com\files\Standards\ustn\ohdot\V8i\ms\plotting\pen\V8i_ms_std.tbl
Plot Driver: \\msconsultants.com\files\Standards\ustn\ohdot\v8i\ms\plotting\PDF.pltcfg
PCF: ohdotV8i
PCF: 60-06634_2E_Columbus
Ohio DOT Workspace
70\71 East Interchange 2E
ms consultants, inc.
msconsultants.com
PLOT.CEL
www.msconsultants.com

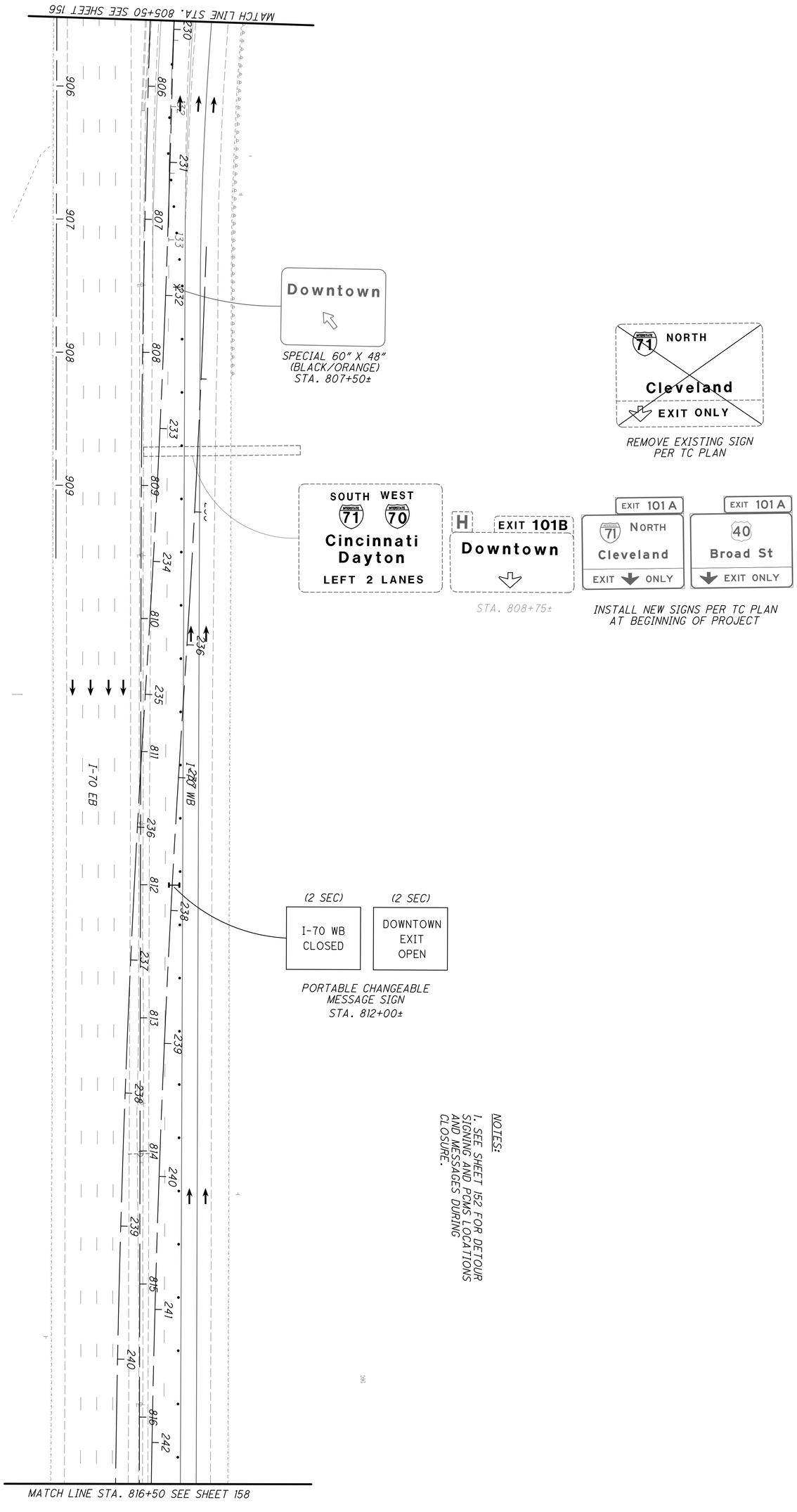

NOTES:
1. SEE SHEET 152 FOR DETOUR SIGNING AND PCMS LOCATIONS AND MESSAGES DURING CLOSURE.

SHEET LEGEND

- TEMPORARY PAVEMENT PLACED PRIOR TO THIS PHASE
- TEMPORARY PAVEMENT PLACED DURING THIS PHASE
- WORK AREA

FOR COMPLETE LEGEND AND DRUM SPACING CHART, SEE SHEET 156

ms consultants, inc.

34" x 22"
Model: Sheet View: FENCE_VIEW1
Printed: 9/28/2018 @ 10:08:54 AM By: kryan
File: N:\03\60\06634_2E\mot\sheets\105322MP1024.dgn
Batchplot Spec: \\msconsultants.com\files\production\03\60\06634_2E\standards\plotdrv\batchplt.spc
Pen Table: \\msconsultants.com\files\Standards\ustn\ohdot\V8i\ms\plotting\pen\V8i_ms_std.tbl
Plot Driver: \\msconsultants.com\files\Standards\ustn\ohdot\v8i\ms\plotting\PDF.pltcfg
PCF: ohdotV8i
PCF: 60-06634_2E_Columbus
Ohio DOT Workspace
70\71 East Interchange 2E
ms consultants, inc.
msconsultants.com
PLOT.CEL
www.msconsultants.com

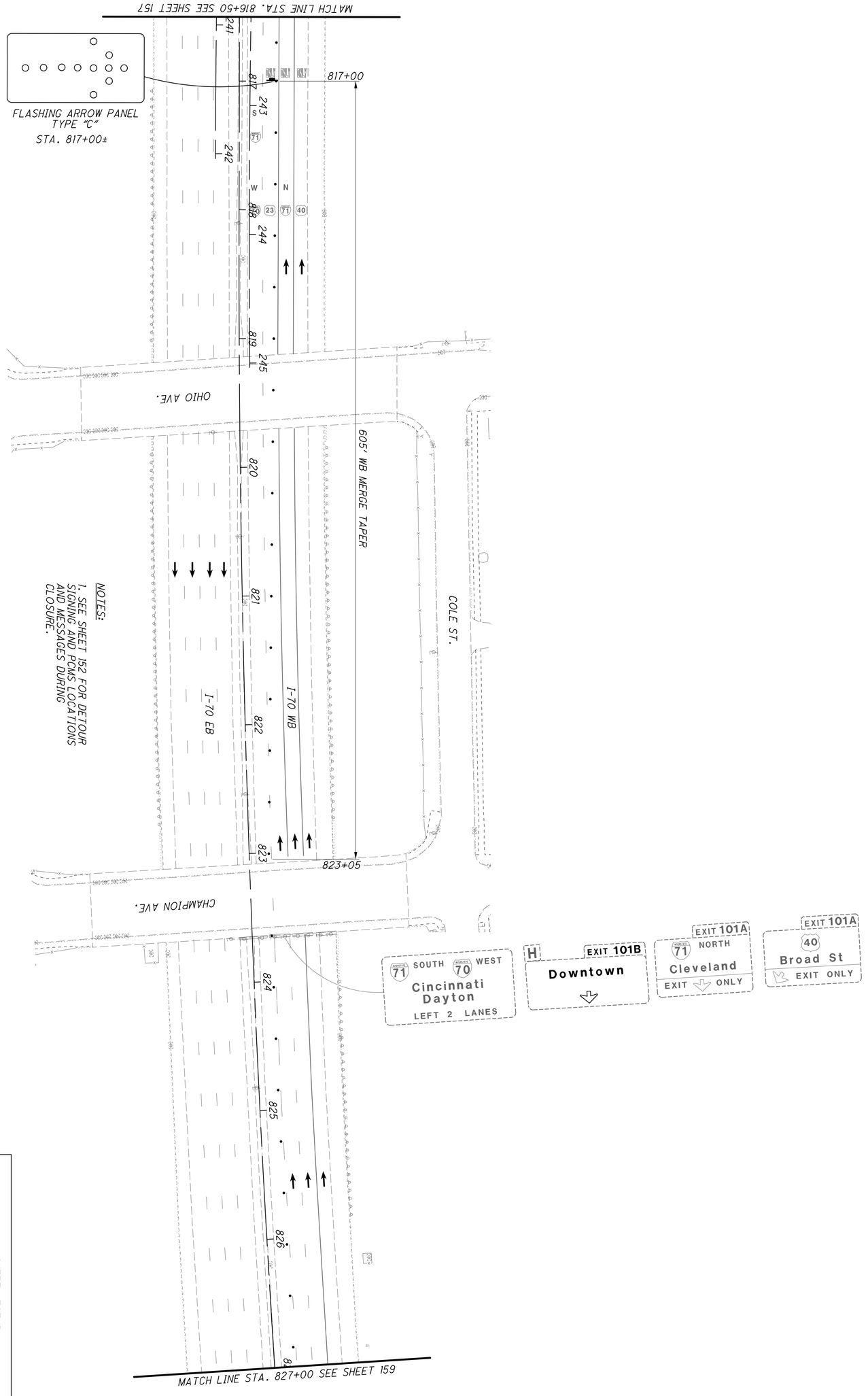

SHEET LEGEND

- TEMPORARY PAVEMENT PLACED PRIOR TO THIS PHASE
- TEMPORARY PAVEMENT PLACED DURING THIS PHASE
- WORK AREA

FOR COMPLETE LEGEND AND DRUM SPACING CHART, SEE SHEET 156

158
2317

FRA-70-14.54

MAINTENANCE OF TRAFFIC
TYPICAL - I-70 WB CLOSURE

CALCULATED JAH
CHECKED JML

0 40
20 80
HORIZONTAL SCALE IN FEET

ms consultants, inc.

PLOT.CEL

ms consultants, inc.
msconsultants.com

Batchplot Spec: \\msconsultants.com\Files\production\03\60\06634_2E\standards\plotdr\batchplt.spc
Pen Table: \\msconsultants.com\Files\Standards\ustn\ohdot\V8i\ms\plotting\pen\V8i_ms_std.tbl
Plot Driver: \\msconsultants.com\Files\Standards\ustn\ohdot\V8i\ms\plotting\PDF.pltcfg

PDF: ohdot V8i
PCF: 60-06634_2E_Columbus

0 1" 0.5"

Ohio DOT Workspace
70\71 East Interchange 2E

www.msconsultants.com

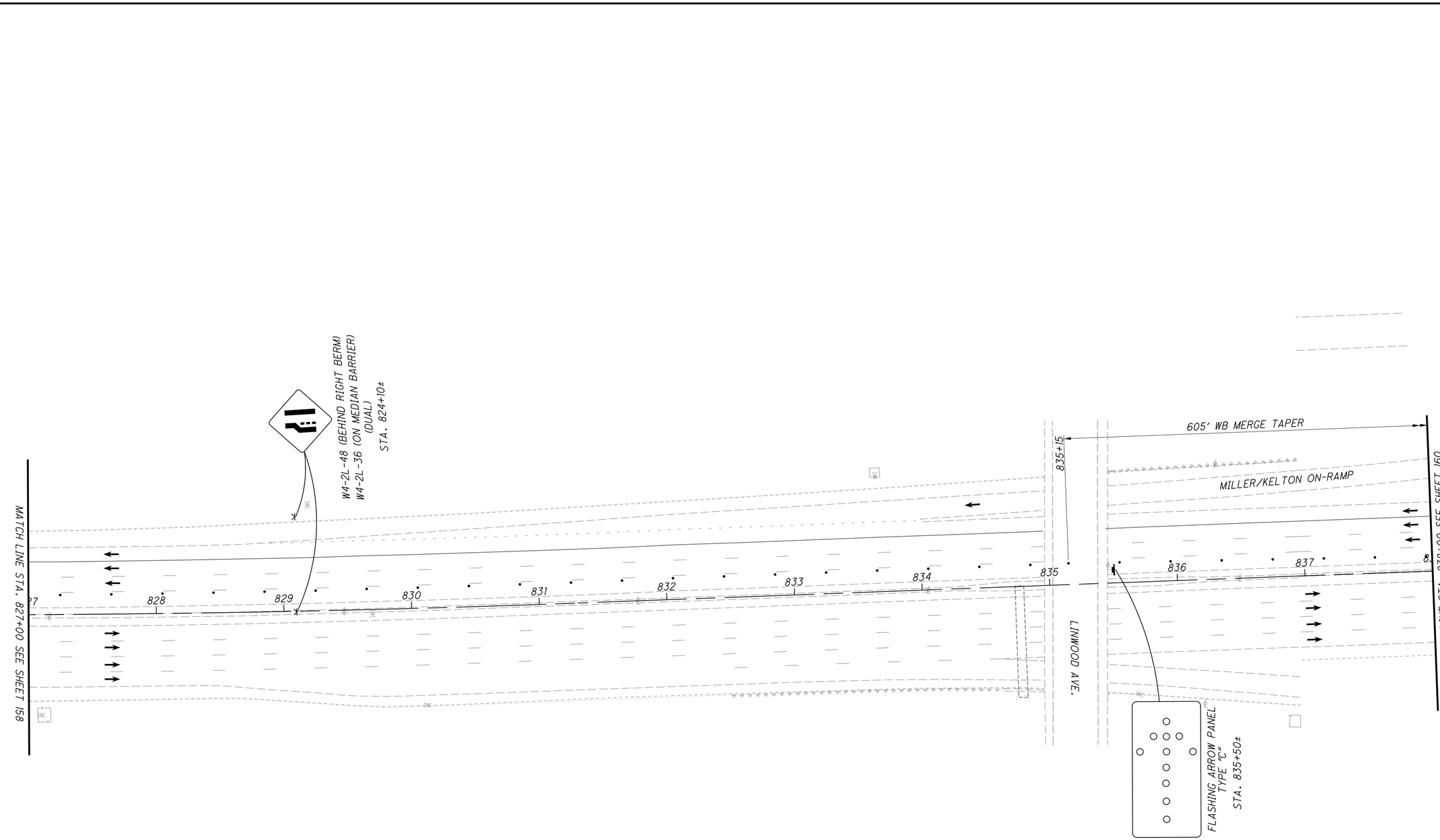

NOTES:

1. SEE SHEET 152 FOR DETOUR SIGNING AND PCMS LOCATIONS AND MESSAGES DURING CLOSURE.

SHEET LEGEND

- TEMPORARY PAVEMENT PLACED PRIOR TO THIS PHASE
- TEMPORARY PAVEMENT PLACED DURING THIS PHASE
- WORK AREA

FOR COMPLETE LEGEND AND DRUM SPACING CHART, SEE SHEET 156

N

0 20 40 80
HORIZONTAL SCALE IN FEET

CALCULATED JAH
CHECKED JML

MAINTENANCE OF TRAFFIC
TYPICAL - I-70 WB CLOSURE

FRA-70-14.54

159
2317

Model: Sheet
Printed: 9/28/2018 @ 10:08:56 AM
File: N:\03\60\06634_2E\mot\sheets\1053220MP1095.dgn
View: FENCE_VIEW1
By: kryan

34" x 22"

ms consultants, inc.

PLOT.CEL

ms consultants, inc.
msconsultants.com

Batchplot Spec: \\msconsultants.com\files\production\03\60\06634_2E\standards\plotdr\batchplt.spc
Pen Table: \\msconsultants.com\files\Standards\usstn\ohdot\V8i\ms\plotting\pen\V8i_ms_std.tbl
Plot Driver: \\msconsultants.com\files\Standards\usstn\ohdot\v8i\ms\plotting\PDF.pltcfg

PDF: ohdotV8i
PCF: 60-06634_2E_Columbus

Ohio DOT Workspace
70\71 East Interchange 2E

www.msconsultants.com

Model: Sheet
Printed: 9/28/2018 @ 10:08:59 AM
File: N:\03\60\06634_2E\mot\sheets\V05322MP1096.dgn

View: FENCE_VIEW1
By: kryan

34" x 22"

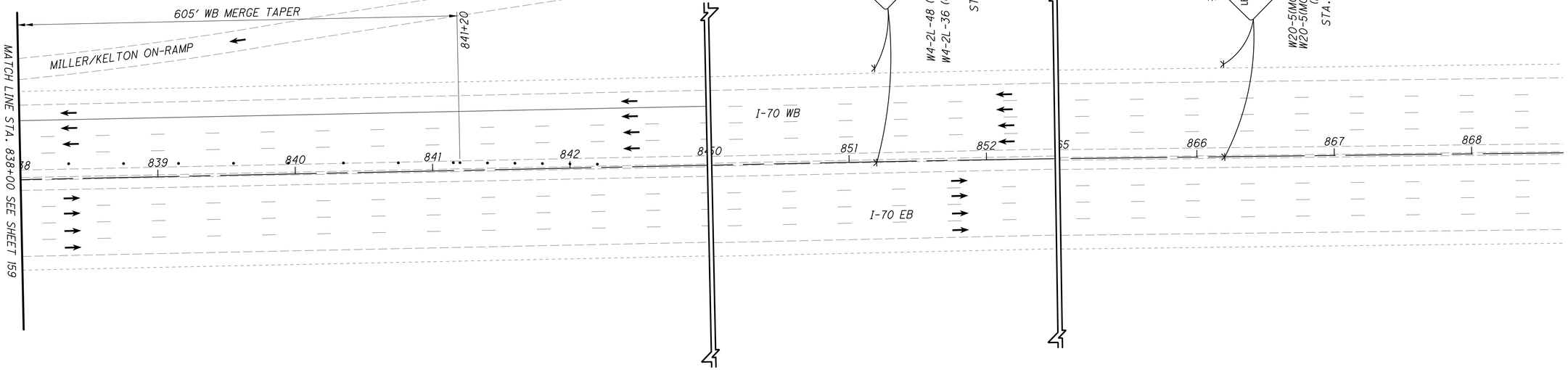

NOTES:

1. SEE SHEET 152 FOR DETOUR SIGNING AND PCMS LOCATIONS AND MESSAGES DURING CLOSURE.

SHEET LEGEND

- TEMPORARY PAVEMENT PLACED PRIOR TO THIS PHASE
- TEMPORARY PAVEMENT PLACED DURING THIS PHASE
- WORK AREA

FOR COMPLETE LEGEND AND DRUM SPACING CHART, SEE SHEET 156

HORIZONTAL SCALE IN FEET
0 20 40 80

CALCULATED JAH
CHECKED JML

MAINTENANCE OF TRAFFIC
TYPICAL - I-70 WB CLOSURE

FRA-70-14.54

160
2317

PLOT.CEL
ms consultants, inc.
msconsultants.com
www.msconsultants.com
Ohio DOT Workspace
70\71 East Interchange 2E
0 0.5" 1"
Batchplot Spec: \\msconsultants.com\files\production\03\60\06634.2E\standards\plotdrv\batchplt.spc
Pen Table: \\msconsultants.com\files\Standards\usstn\ohdot\V8i\ms\plotting\pen\V8i_ms_std.tbl
Plot Driver: \\msconsultants.com\files\Standards\usstn\ohdot\v8i\ms\plotting\PDF.pltcfg
PDF: ohdotV8i
PCF: 60-06634_2E_Columbus
34" x 22"
View: FENCE_VIEW1
By: kryan
Model: Sheet
Printed: 9/28/2018 @ 10:09:01 AM
File: N:\03\60\06634.2E\mot\sheets\1053220M0007.dgn

MESSAGES FOR PORTABLE CHANGEABLE MESSAGE SIGNS

FIRST LINE TO BE DAY OF WEEK

(2 SEC)	(2 SEC)	
70 W CLOSES	XXXXXXX 11 PM TO 5 AM	(1) *
I-70 WB CLOSED AHEAD	USE 270N TO 670 WEST	(2)
NO ACCESS TO 71N	USE 270N TO 670 WEST	(3)
I-70 WB CLOSED @ JAMES	USE 270N TO 670 WEST	(4)
I-70 WB CLOSED @ JAMES RD	ALL TRAFFIC EXIT	(5)
70W/71S TRAFFIC	USE 670 WEST	(6)
70 WEST TRAFFIC	USE 71 SOUTH	(7)
70 WEST TRAFFIC	USE 33E TO 270 S	(8)

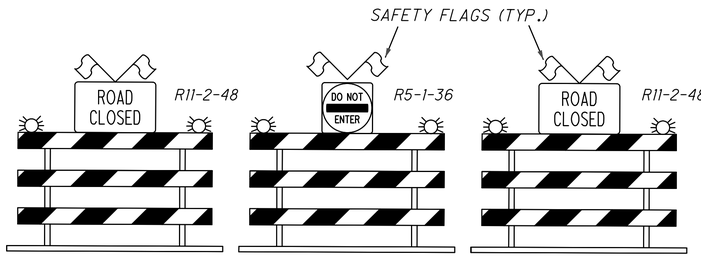

10' TYPE 3 SOLID BARRICADES (PLACED ACROSS ENTIRE ROADWAY) (9)

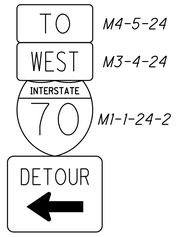

M4-9L-30 (10)

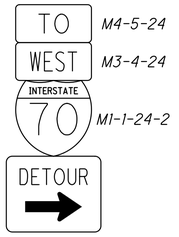

M4-9R-30 (11)

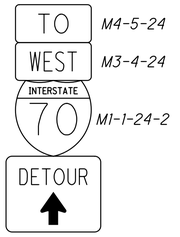

M4-9C-30 (12)

LEGEND

- PORTABLE CHANGEABLE MESSAGE SIGN
- FLOW ARROWS
- SIGN W/ SUPPORT
- TYPE 3 BARRICADES W/ SIGN
- LAW ENFORCEMENT OFFICER W/PATROL CAR

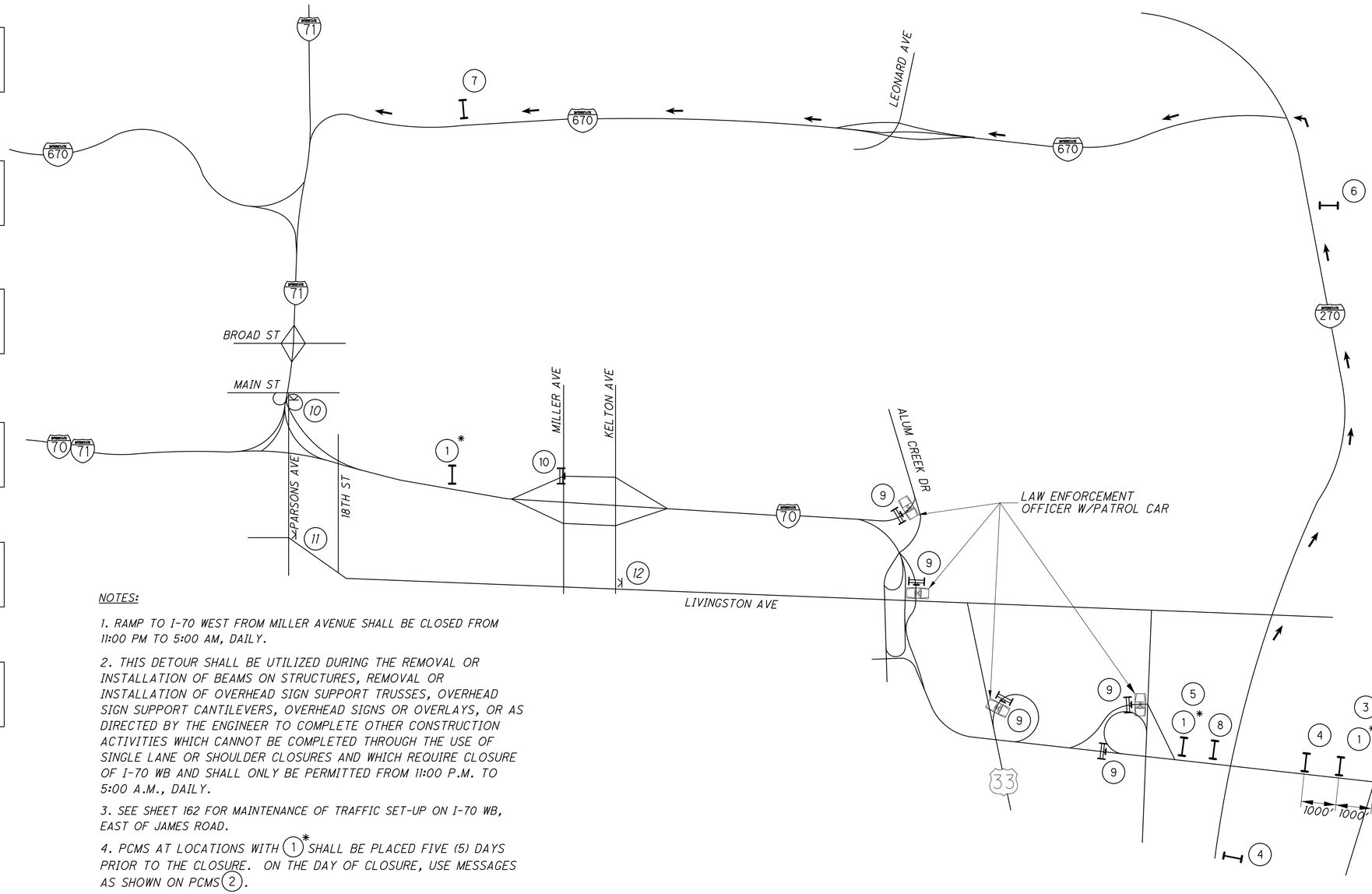

NOTES:

1. RAMP TO I-70 WEST FROM MILLER AVENUE SHALL BE CLOSED FROM 11:00 PM TO 5:00 AM, DAILY.
2. THIS DETOUR SHALL BE UTILIZED DURING THE REMOVAL OR INSTALLATION OF BEAMS ON STRUCTURES, REMOVAL OR INSTALLATION OF OVERHEAD SIGN SUPPORT TRUSSES, OVERHEAD SIGN SUPPORT CANTILEVERS, OVERHEAD SIGNS OR OVERLAYS, OR AS DIRECTED BY THE ENGINEER TO COMPLETE OTHER CONSTRUCTION ACTIVITIES WHICH CANNOT BE COMPLETED THROUGH THE USE OF SINGLE LANE OR SHOULDER CLOSURES AND WHICH REQUIRE CLOSURE OF I-70 WB AND SHALL ONLY BE PERMITTED FROM 11:00 P.M. TO 5:00 A.M., DAILY.
3. SEE SHEET 162 FOR MAINTENANCE OF TRAFFIC SET-UP ON I-70 WB, EAST OF JAMES ROAD.
4. PCMS AT LOCATIONS WITH (1) * SHALL BE PLACED FIVE (5) DAYS PRIOR TO THE CLOSURE. ON THE DAY OF CLOSURE, USE MESSAGES AS SHOWN ON PCMS (2).

CALCULATED JAH
CHECKED JML

TYPICAL DETOUR - I-70 WB CLOSURE AT LIVINGSTON AVE.

FRA-70-14.54

ms consultants, inc.

PLOT.CEL

ms consultants, inc.
msconsultants.com

www.msconsultants.com

Ohio DOT Workspace
70\71 East Interchange 2E

Batchplot Spec: \\msconsultants.com\files\production\03\60\06634.2E\standards\plotdir\batchplt.spc
Pen Table: \\msconsultants.com\files\Standards\ustn\ohdot\V8i\ms\plotting\pen\V8i_ms_std.tbl
Plot Driver: \\msconsultants.com\files\Standards\ustn\ohdot\v8i\ms\plotting\PDF: 60-06634_2E_Columbus

PDF: ohdotV8i

Model: Sheet
Printed: 9/28/2018 @ 10:09:03 AM
File: N:\03\60\06634.2E\mot\sheets\105220MP1090.dgn

View: FENCE_VIEW1
By: kryan

34" x 22"

I-70 EB

2640′

1500′

1000′

MATCH LINE, SEE BELOW

I-70 WB

TYPE 'C' FLASHING ARROW PANEL

W20-1-48 (BEHIND RIGHT BERM) W20-1-36 (ON MEDIAN BARRIER)

ROAD WORK 1 MILE

TYPE 'C' FLASHING ARROW PANEL

W20-54-48 (BEHIND RIGHT BERM) W20-54-36 (ON MEDIAN BARRIER)

2 LEFT LANES CLOSED ½ MILE

W4-2L-48 (BEHIND RIGHT BERM) W4-2L-36 (ON MEDIAN BARRIER)

MATCH LINE, SEE ABOVE

I-70 EB

40′ C/C (TYP.)

I-70 WB

SEE NOTE 1

JAMES RD.

SEE NOTE 1

780′ MERGE TAPER

1560′

780′ MERGE TAPER

390′

NOTES

1. THE NORTHBOUND LEFT TURN LANE AND SOUTHBOUND RIGHT TURN LANE ON JAMES RD. SHALL BE CLOSED AS PER MT-98.30.

2. THIS DETOUR SHALL ONLY BE PERMITTED FROM 11:00 PM TO 5:00 AM, DAILY.

3. SEE SHEET 161 FOR DETOUR SIGNING AND PCMS LOCATIONS AND MESSAGES DURING CLOSURE.

N

0 20 40 80
HORIZONTAL SCALE IN FEET

CALCULATED JAH
CHECKED JML

MAINTENANCE OF TRAFFIC

TYPICAL - I-70 WB CLOSURE AT LIVINGSTON

FRA-70-14.54

162
2317

PLOT.CEL

ms consultants, inc.
msconsultants.com

Ohio DOT Workspace
70\71 East Interchange 2E

www.msconsultants.com

0 0.5" 1"

Batchplot Spec: \\msconsultants.com\files\production\03\60\06634_2E\standards\plotdrv\batchplt.spc
Pen Table: \\msconsultants.com\files\Standards\usth\ohdot\V8i\ms\plotting\pen\V8i_ms_std.tbl PDF: ohdot\V8i
Plot Driver: \\msconsultants.com\files\Standards\usth\ohdot\V8i\ms\plotting\PDF.pltcfg PCF: 60-06634_2E_Columbus

Model: Sheet
Printed: 9/28/2018 @ 10:09:04 AM View: FENCE_VIEW1
File: N:\03\60\06634_2E\mot\sheets\105322M03001.dgn By: kryan

34" x 22"

MESSAGES FOR PORTABLE CHANGEABLE MESSAGE SIGNS

LAST LINE TO BE DAY OF WEEK

(1) *	(1)	(2)	(3)
(2 SEC) I-71 NB CLOSES XXXXXXXX	(2 SEC) I-71 NB TRAFFIC	(2 SEC) I-71 NB TRAFFIC	(2 SEC) I-71 NB TRAFFIC
(2 SEC) AT I-70 EXIT 101A 11P - 5A	(2 SEC) USE 315N TO 670E	(2 SEC) USE 670E TO 71N	(2 SEC) USE 270 N

LEGEND

- I PORTABLE CHANGEABLE MESSAGE SIGN
- K WORK ZONE SIGN W/ SUPPORT
- TYPE 3 BARRICADES W/ SIGN
- DETOUR ROUTE

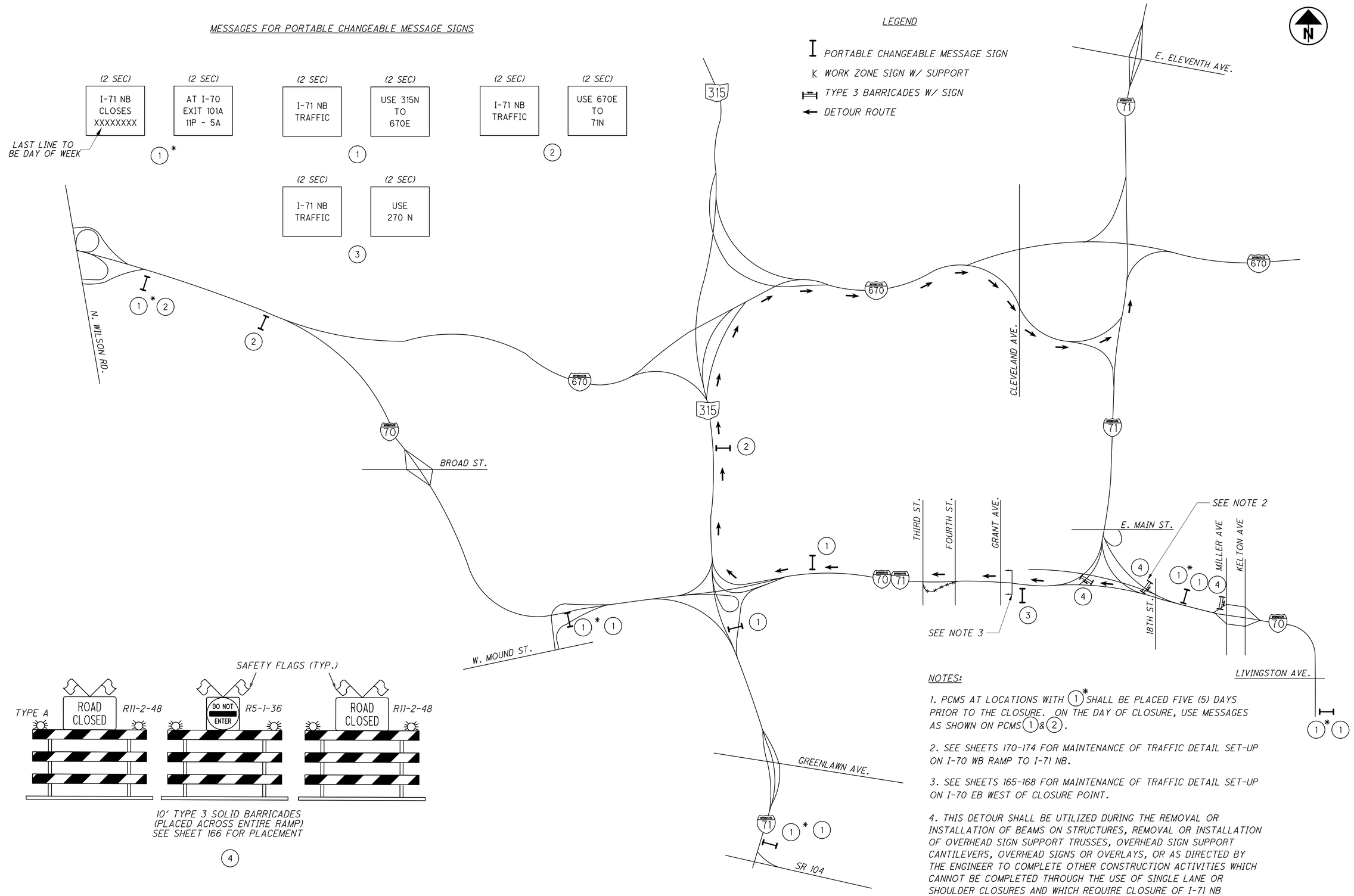

10' TYPE 3 SOLID BARRICADES
(PLACED ACROSS ENTIRE RAMP)
SEE SHEET 166 FOR PLACEMENT

(4)

NOTES:

1. PCMS AT LOCATIONS WITH (1)* SHALL BE PLACED FIVE (5) DAYS PRIOR TO THE CLOSURE. ON THE DAY OF CLOSURE, USE MESSAGES AS SHOWN ON PCMS (1) & (2).

2. SEE SHEETS 170-174 FOR MAINTENANCE OF TRAFFIC DETAIL SET-UP ON I-70 WB RAMP TO I-71 NB.

3. SEE SHEETS 165-168 FOR MAINTENANCE OF TRAFFIC DETAIL SET-UP ON I-70 EB WEST OF CLOSURE POINT.

4. THIS DETOUR SHALL BE UTILIZED DURING THE REMOVAL OR INSTALLATION OF BEAMS ON STRUCTURES, REMOVAL OR INSTALLATION OF OVERHEAD SIGN SUPPORT TRUSSES, OVERHEAD SIGN SUPPORT CANTILEVERS, OVERHEAD SIGNS OR OVERLAYS, OR AS DIRECTED BY THE ENGINEER TO COMPLETE OTHER CONSTRUCTION ACTIVITIES WHICH CANNOT BE COMPLETED THROUGH THE USE OF SINGLE LANE OR SHOULDER CLOSURES AND WHICH REQUIRE CLOSURE OF I-71 NB MAINLINE AND SHALL ONLY BE PERMITTED FROM 11:00 P.M. TO 5:00 A.M., DAILY.

CALCULATED JAH
CHECKED JML

TYPICAL DETOUR - I-71 NB MAINLINE CLOSURE

FRA-70-14.54

163
2317

ms consultants, inc.

PLOT.CEL
ms consultants, inc.
msconsultants.com
www.msconsultants.com
Ohio DOT Workspace
70\71 East Interchange 2E
0 0.5" 1"
Batchplot Spec: \\msconsultants.com\Files\Production\03\60\06634_2E\standards\plotdrv\batchplt.spc
Pen Table: \\msconsultants.com\Files\Standards\usth\ohdot\V8i\ms\plotting\pen\V8i_ms_std.tbl
Plot Driver: \\msconsultants.com\Files\Standards\usth\ohdot\v8i\ms\plotting\PDF.pltcfg
PLOT: ohdot\V8i
PLOT: 60-06634_2E_Columbus
34" x 22"
View: FENCE_VIEW1
By: kryan
Model: Sheet
Printed: 9/28/2018 @ 10:09:06 AM
File: N:\03\60\06634_2E\mot\sheets\05322M00001.dgn

CALCULATED JAH
CHECKED JML

TYPICAL DETOUR - I-70 EB TO I-71 NB CLOSURE

FRA-70-14.54

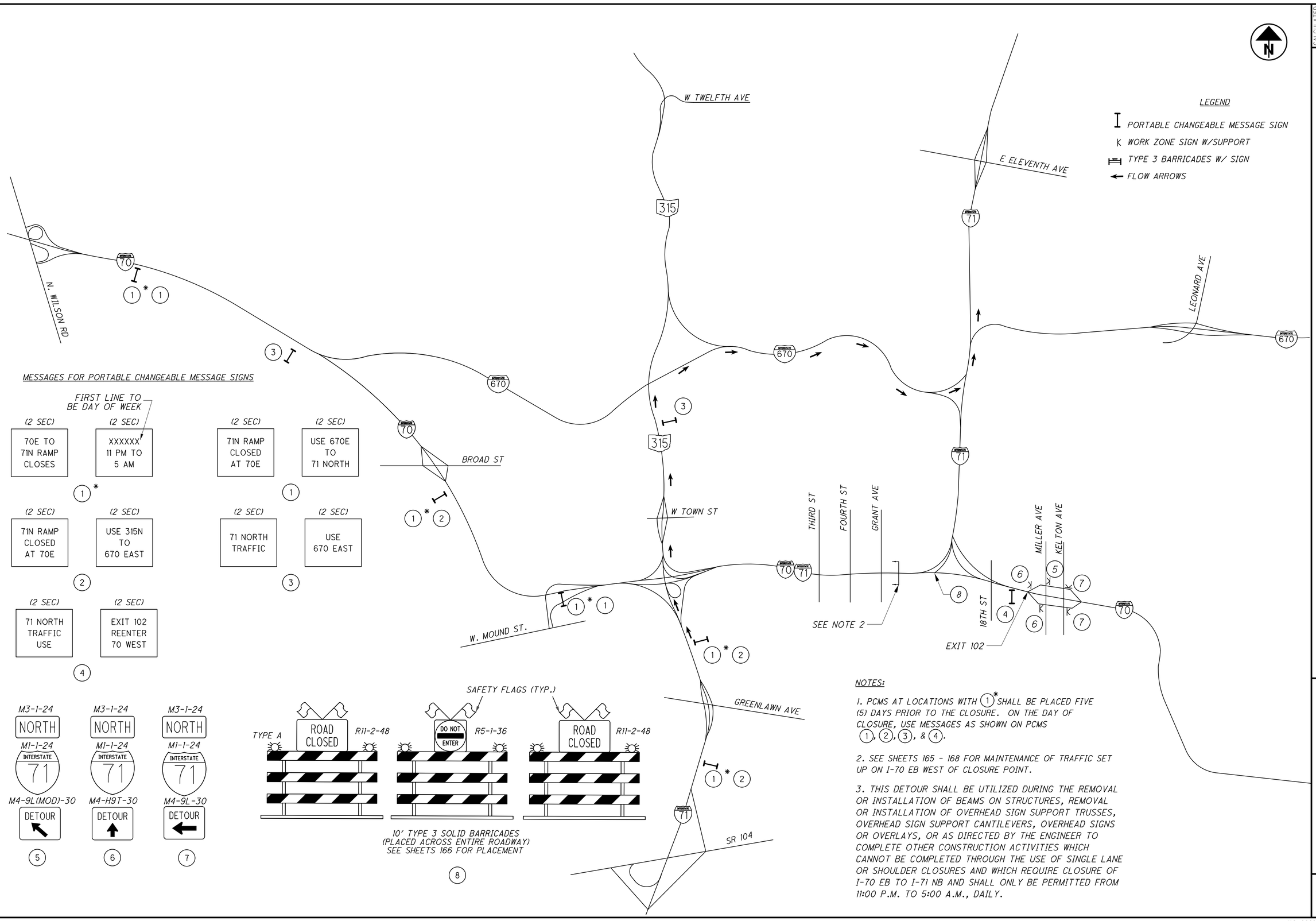

MESSAGES FOR PORTABLE CHANGEABLE MESSAGE SIGNS

FIRST LINE TO BE DAY OF WEEK

(1)*

(2 SEC)	(2 SEC)
70E TO 71N RAMP CLOSES	XXXXXX 11 PM TO 5 AM

(2)

(2 SEC)	(2 SEC)
71N RAMP CLOSED AT 70E	USE 315N TO 670 EAST

(3)

(2 SEC)	(2 SEC)
71N RAMP CLOSED AT 70E	USE 670 EAST

(4)

(2 SEC)	(2 SEC)
71 NORTH TRAFFIC USE	EXIT 102 REENTER 70 WEST

(1)*

(2 SEC)	(2 SEC)
71 NORTH TRAFFIC	USE 670 EAST

(1)*

(2 SEC)
USE 670E TO 71 NORTH

(5) (6) (7)

10' TYPE 3 SOLID BARRICADES
(PLACED ACROSS ENTIRE ROADWAY)
SEE SHEETS 166 FOR PLACEMENT

(8)

NOTES:

1. PCMS AT LOCATIONS WITH (1)* SHALL BE PLACED FIVE (5) DAYS PRIOR TO THE CLOSURE. ON THE DAY OF CLOSURE, USE MESSAGES AS SHOWN ON PCMS (1), (2), (3), & (4).

2. SEE SHEETS 165 - 168 FOR MAINTENANCE OF TRAFFIC SET UP ON I-70 EB WEST OF CLOSURE POINT.

3. THIS DETOUR SHALL BE UTILIZED DURING THE REMOVAL OR INSTALLATION OF BEAMS ON STRUCTURES, REMOVAL OR INSTALLATION OF OVERHEAD SIGN SUPPORT TRUSSES, OVERHEAD SIGN SUPPORT CANTILEVERS, OVERHEAD SIGNS OR OVERLAYS, OR AS DIRECTED BY THE ENGINEER TO COMPLETE OTHER CONSTRUCTION ACTIVITIES WHICH CANNOT BE COMPLETED THROUGH THE USE OF SINGLE LANE OR SHOULDER CLOSURES AND WHICH REQUIRE CLOSURE OF I-70 EB TO I-71 NB AND SHALL ONLY BE PERMITTED FROM 11:00 P.M. TO 5:00 A.M., DAILY.

PLOT.CEL

ms consultants, inc.
msconsultants.com

www.msconsultants.com

Ohio DOT Workspace
70\71 East Interchange 2E

0 0.5" 1"

Batchplot Spec: \\msconsultants.com\files\production\03\60\06634_2E\standards\plotdr\batchplt.spc
Pen Table: \\msconsultants.com\files\Standards\astm\ohdot\V8i\ms\plotting\pen\V8i_ms_std.tbl PDF: ohdotV8i
Plot Driver: \\msconsultants.com\files\Standards\astm\ohdot\V8i\ms\plotting\PDF.pltcfg PCF: 60-06634_2E_Columbus

Model: Sheet View: FENCE_VIEW1
Printed: 9/28/2018 @ 10:09:10 AM By: kryan
File: N:\03\60\06634_2E\ms01\sheets\105322MP3007.dgn

34" x 22"

NOTES:

1. SEE SHEET 164 FOR DETOUR SIGNING AND PCMS LOCATIONS AND MESSAGES DURING CLOSURE.

2. SEE PHASE 3A, SHEET 236 FOR THIRD ST. ON-RAMP CLOSURE DETAILS

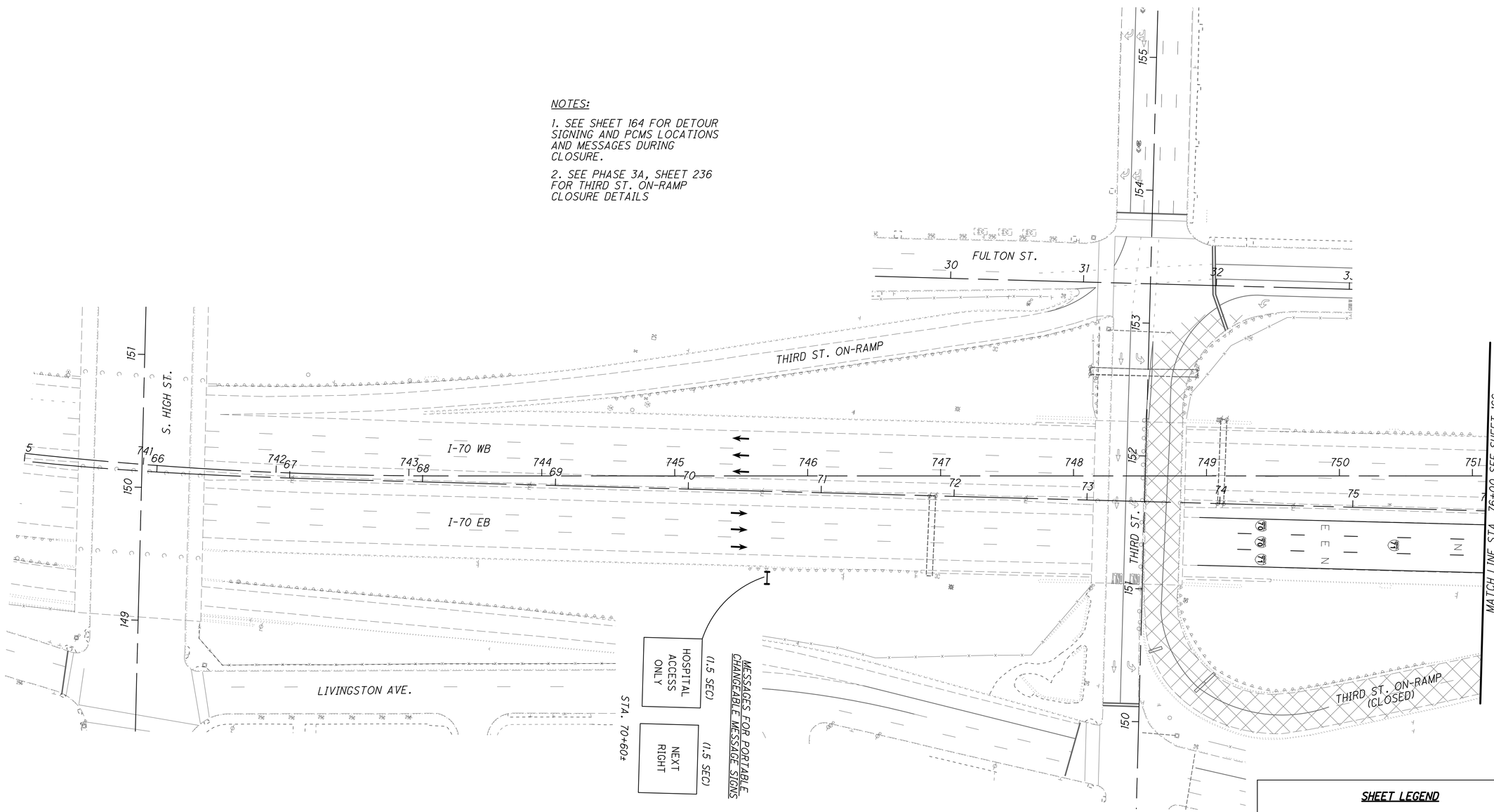

NOTES:

1. WORKZONE PAVEMENT MARKINGS SHOWN FOR REFERENCE ONLY. SEE INDIVIDUAL MOT PHASE PLAN SHEETS FOR DETAILS.

SHEET LEGEND

- *TEMPORARY PAVEMENT PLACED PRIOR TO THIS PHASE*
- *TEMPORARY PAVEMENT PLACED DURING THIS PHASE*
- *WORK AREA*

FOR COMPLETE LEGEND AND DRUM SPACING CHART, SEE SHEET 156

0 20 40 80
HORIZONTAL SCALE IN FEET

CALCULATED JAH
CHECKED JML

MAINTENANCE OF TRAFFIC
TYPICAL DETAILS- I-70 EB TO I-71 NB CLOSURE

FRA-70-14.54

ms consultants, inc.

PLOT.CEL

ms consultants, inc.
msconsultants.com

www.msconsultants.com

Ohio DOT Workspace
70\71 East Interchange 2E
PCF: 60-06634_2E_Columbus
PCF: ohdot\V8i

Batchplot Spec: \\msconsultants.com\files\production\03\60\06634_2E\standards\plotdir\batchplt.spc
Pen Table: \\msconsultants.com\files\Standards\usth\ohdot\V8i\ms\plotting\pen\V8i_ms_std.tbl
Plot Driver: \\msconsultants.com\files\Standards\usth\ohdot\v8i\ms\plotting\PDF.pltcfg

Model: Sheet
Printed: 9/28/2018 @ 10:09:14 AM
File: N:\03\60\06634_2E\mot\sheets\105322MP3008.dgn
View: FENCE_VIEW1
By: kryan

34" x 22"

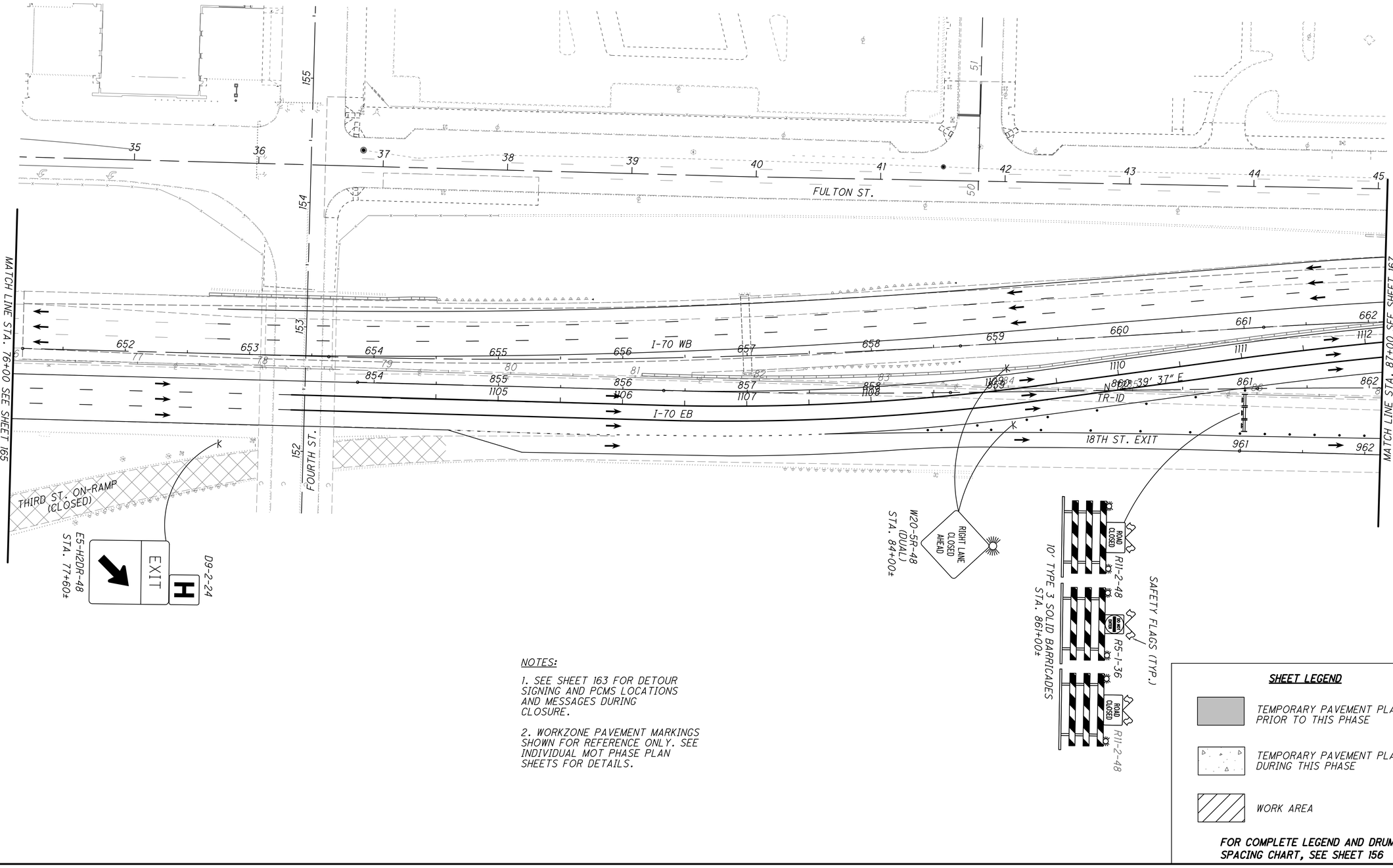

NOTES:

1. SEE SHEET 163 FOR DETOUR SIGNING AND PCMS LOCATIONS AND MESSAGES DURING CLOSURE.

2. WORKZONE PAVEMENT MARKINGS SHOWN FOR REFERENCE ONLY. SEE INDIVIDUAL MOT PHASE PLAN SHEETS FOR DETAILS.

SHEET LEGEND

- TEMPORARY PAVEMENT PLACED PRIOR TO THIS PHASE
- TEMPORARY PAVEMENT PLACED DURING THIS PHASE
- WORK AREA

FOR COMPLETE LEGEND AND DRUM SPACING CHART, SEE SHEET 156

HORIZONTAL SCALE IN FEET
0 20 40 80

CALCULATED JAH
CHECKED JML

MAINTENANCE OF TRAFFIC
TYPICAL DETAILS- I-70 EB TO I-71 NB CLOSURE

FRA-70-14.54

166
2317

ms consultants, inc.

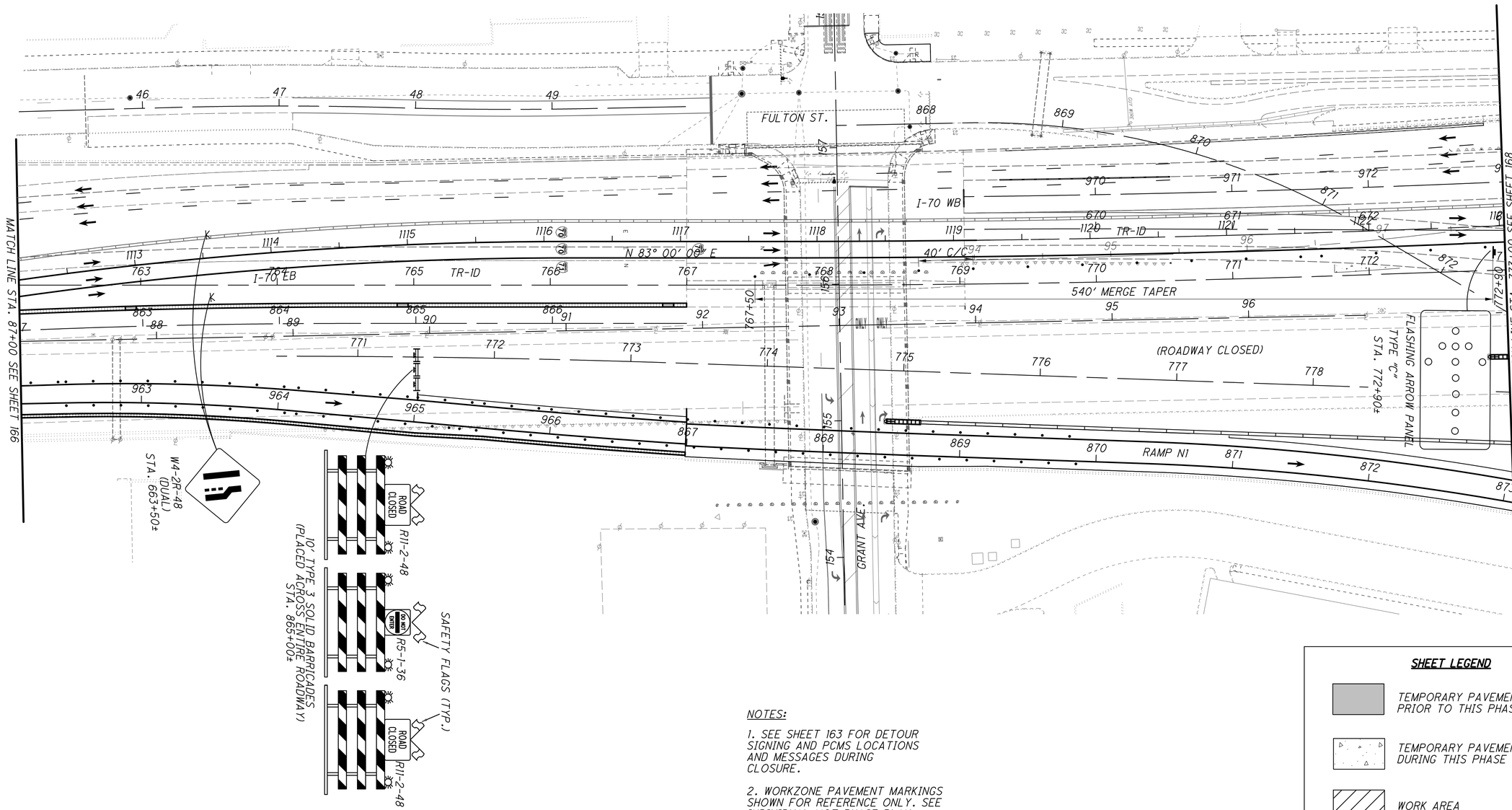

NOTES:

1. SEE SHEET 163 FOR DETOUR SIGNING AND PCMS LOCATIONS AND MESSAGES DURING CLOSURE.

2. WORKZONE PAVEMENT MARKINGS SHOWN FOR REFERENCE ONLY. SEE INDIVIDUAL MOT PHASE PLAN SHEETS FOR DETAILS.

SHEET LEGEND

- TEMPORARY PAVEMENT PLACED PRIOR TO THIS PHASE
- TEMPORARY PAVEMENT PLACED DURING THIS PHASE
- WORK AREA

FOR COMPLETE LEGEND AND DRUM SPACING CHART, SEE SHEET 156

HORIZONTAL SCALE IN FEET 0 20 40 80

CALCULATED JAH
CHECKED JML

MAINTENANCE OF TRAFFIC
TYPICAL DETAILS- I-70 EB TO I-71 NB CLOSURE

FRA-70-14.54

ms consultants, inc.

PLOT.CEL
ms consultants, inc.
msconsultants.com
Ohio DOT Workspace
70\71 East Interchange 2E
www.msconsultants.com
Batchplot Spec: \\msconsultants.com\files\production\03\60\06634_2E\standards\plotdrv\batchplt.spc
Pen Table: \\msconsultants.com\files\Standards\ustn\ohdot\V8i\ms\plotting\pen\V8i_ms_std.tbl
Plot Driver: \\msconsultants.com\files\Standards\ustn\ohdot\v8i\ms\plotting\PDF.pltcfg
34" x 22"
Model: Sheet View: FENCE_VIEW1
Printed: 9/28/2018 @ 10:09:17 AM By: kryan
File: N:\03\60\06634_2E\mot\sheets\105322MP3009.dgn

PLOT.CEL

ms consultants, inc.
msconsultants.com

Ohio DOT Workspace
70\71 East Interchange 2E
www.msconsultants.com

Batchplot Spec: \\msconsultants.com\files\production\03\60\06634_2E\standards\plotdrv\batchplt.spc
Pen Table: \\msconsultants.com\files\Standards\ustn\ohdot\V8i\ms\plotting\pen\V8i_ms_std.tbl
Plot Driver: \\msconsultants.com\files\Standards\ustn\ohdot\v8i\ms\plotting\PDF.pltcfg

34" x 22"

Model: Sheet
Printed: 9/28/2018 @ 10:09:21 AM
File: N:\03\60\06634_2E\mot\sheets\105322MP3010.dgn
View: FENCE_VIEW1
By: kryan

NOTES:

1. SEE SHEET 163 FOR DETOUR SIGNING AND PCMS LOCATIONS AND MESSAGES DURING CLOSURE.

2. WORKZONE PAVEMENT MARKINGS SHOWN FOR REFERENCE ONLY. SEE INDIVIDUAL MOT PHASE PLAN SHEETS FOR DETAILS.

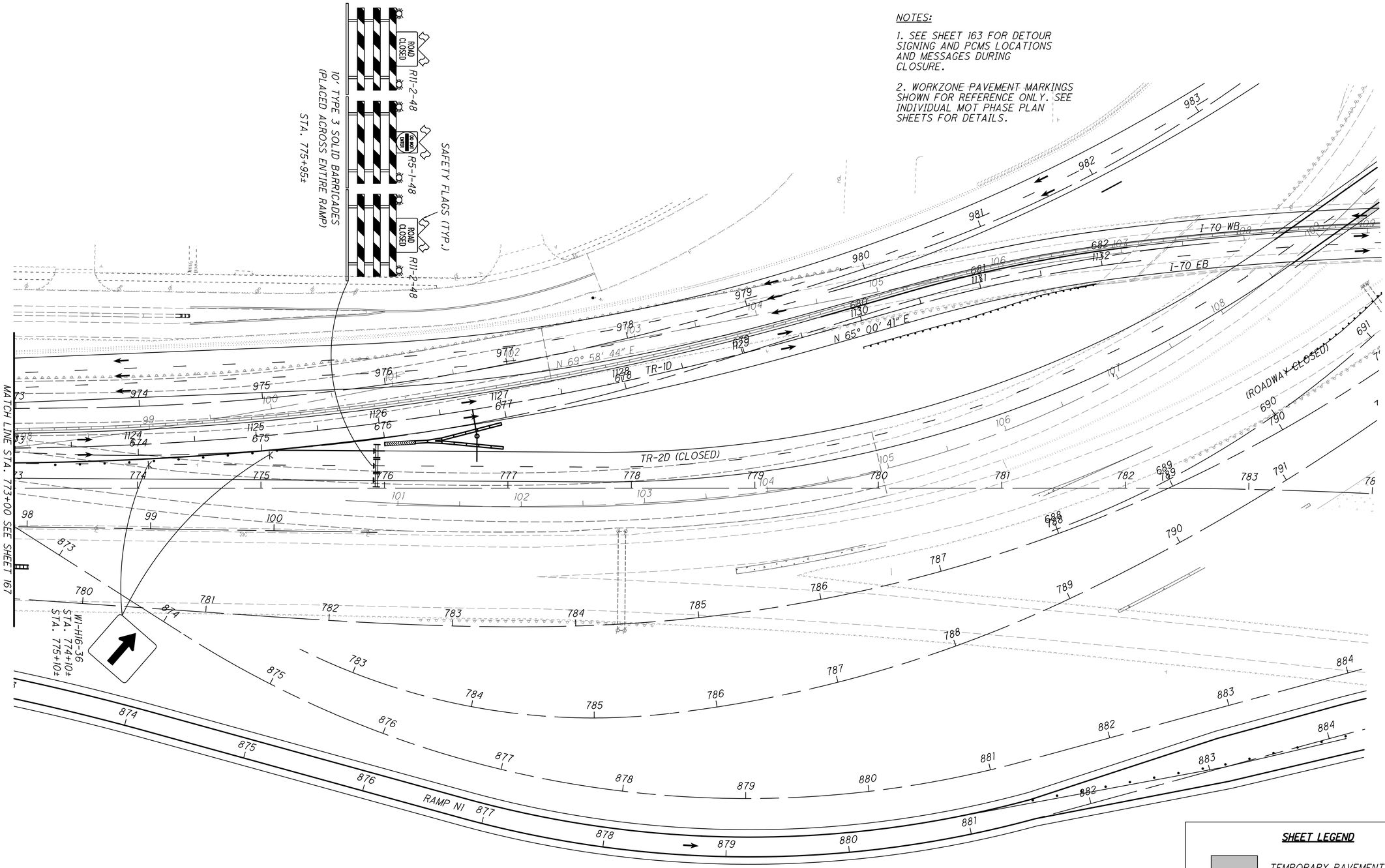

SHEET LEGEND

TEMPORARY PAVEMENT PLACED PRIOR TO THIS PHASE

TEMPORARY PAVEMENT PLACED DURING THIS PHASE

WORK AREA

FOR COMPLETE LEGEND AND DRUM SPACING CHART, SEE SHEET 156

HORIZONTAL SCALE IN FEET
0 20 40 80

CALCULATED JAH
CHECKED JML

MAINTENANCE OF TRAFFIC
TYPICAL DETAILS- I-70 EB TO I-71 NB CLOSURE

FRA-70-14.54

ms consultants, inc.

PLOT.CEL
ms consultants, inc.
msconsultants.com
Ohio DOT Workspace
70\71 East Interchange 2E
www.msconsultants.com
Batchplot Spec: \\msconsultants.com\files\production\03\60\06634_2E\standards\plotdrv\batchplt.spc
Pen Table: \\msconsultants.com\files\Standards\ustn\ohdot\V8i\ms\plotting\pen\V8i_ms_std.tbl
Plot Driver: \\msconsultants.com\files\Standards\ustn\ohdot\v8i\ms\plotting\PDF.pltcfg
34" x 22"
Model: Sheet
Printed: 9/28/2018 @ 10:09:23 AM
File: N:\03\60\06634_2E\mot\sheets\105322MD0002.dgn
View: FENCE_VIEW1
By: kryan

MESSAGES FOR PORTABLE CHANGEABLE MESSAGE SIGNS

FIRST LINE TO BE DAY OF WEEK

(2 SEC)	(2 SEC)
70W TO 71N RAMP CLOSES	XXXXXX 11 PM TO 5 AM

1 *

(2 SEC)	(2 SEC)
71 NORTH TRAFFIC	USE 315N TO 670 EAST

2

(2 SEC)	(2 SEC)
71N RAMP CLOSED	USE 70W TO 315 NORTH

1

(2 SEC)	(2 SEC)
71 NORTH TRAFFIC	USE 670 EAST

3

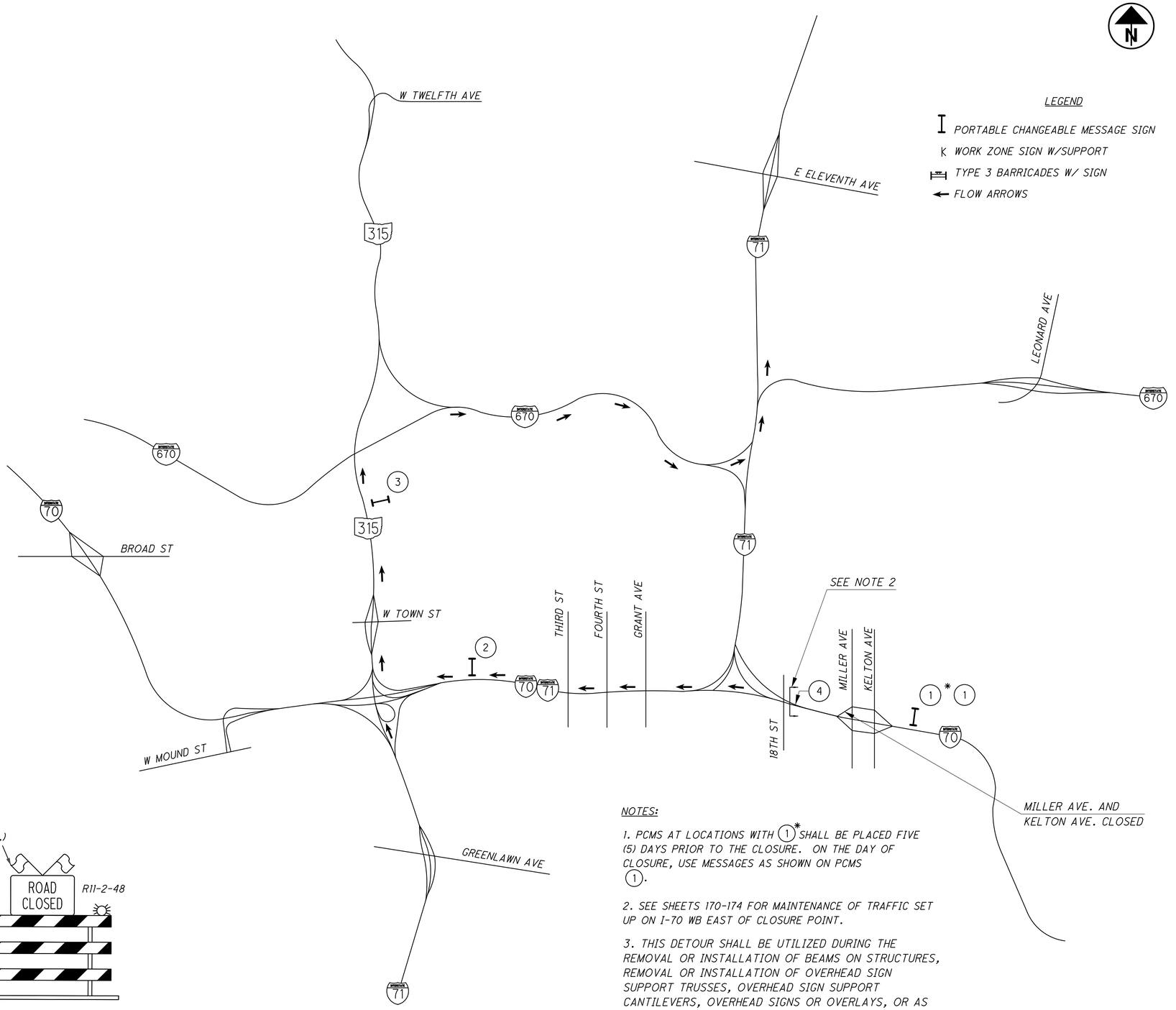

LEGEND

- PORTABLE CHANGEABLE MESSAGE SIGN
- WORK ZONE SIGN W/SUPPORT
- TYPE 3 BARRICADES W/ SIGN
- FLOW ARROWS

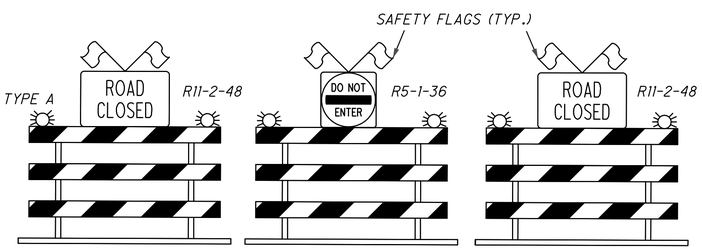

10' TYPE 3 SOLID BARRICADES
(PLACED ACROSS ENTIRE ROADWAY)
SEE SHEET 170 FOR PLACEMENT

4

NOTES:

1. PCMS AT LOCATIONS WITH 1* SHALL BE PLACED FIVE (5) DAYS PRIOR TO THE CLOSURE. ON THE DAY OF CLOSURE, USE MESSAGES AS SHOWN ON PCMS 1.

2. SEE SHEETS 170-174 FOR MAINTENANCE OF TRAFFIC SET UP ON I-70 WB EAST OF CLOSURE POINT.

3. THIS DETOUR SHALL BE UTILIZED DURING THE REMOVAL OR INSTALLATION OF BEAMS ON STRUCTURES, REMOVAL OR INSTALLATION OF OVERHEAD SIGN SUPPORT TRUSSES, OVERHEAD SIGN SUPPORT CANTILEVERS, OVERHEAD SIGNS OR OVERLAYS, OR AS DIRECTED BY THE ENGINEER TO COMPLETE OTHER CONSTRUCTION ACTIVITIES WHICH CANNOT BE COMPLETED THROUGH THE USE OF SINGLE LANE OR SHOULDER CLOSURES AND WHICH REQUIRE CLOSURE OF I-70 WB TO I-71 NB AND SHALL ONLY BE PERMITTED FROM 11:00 P.M. TO 5:00 A.M., DAILY.

CALCULATED JAH
CHECKED JML

TYPICAL DETOUR - I-70 WB TO I-71 NB CLOSURE

FRA-70-14.54

ms consultants, inc.

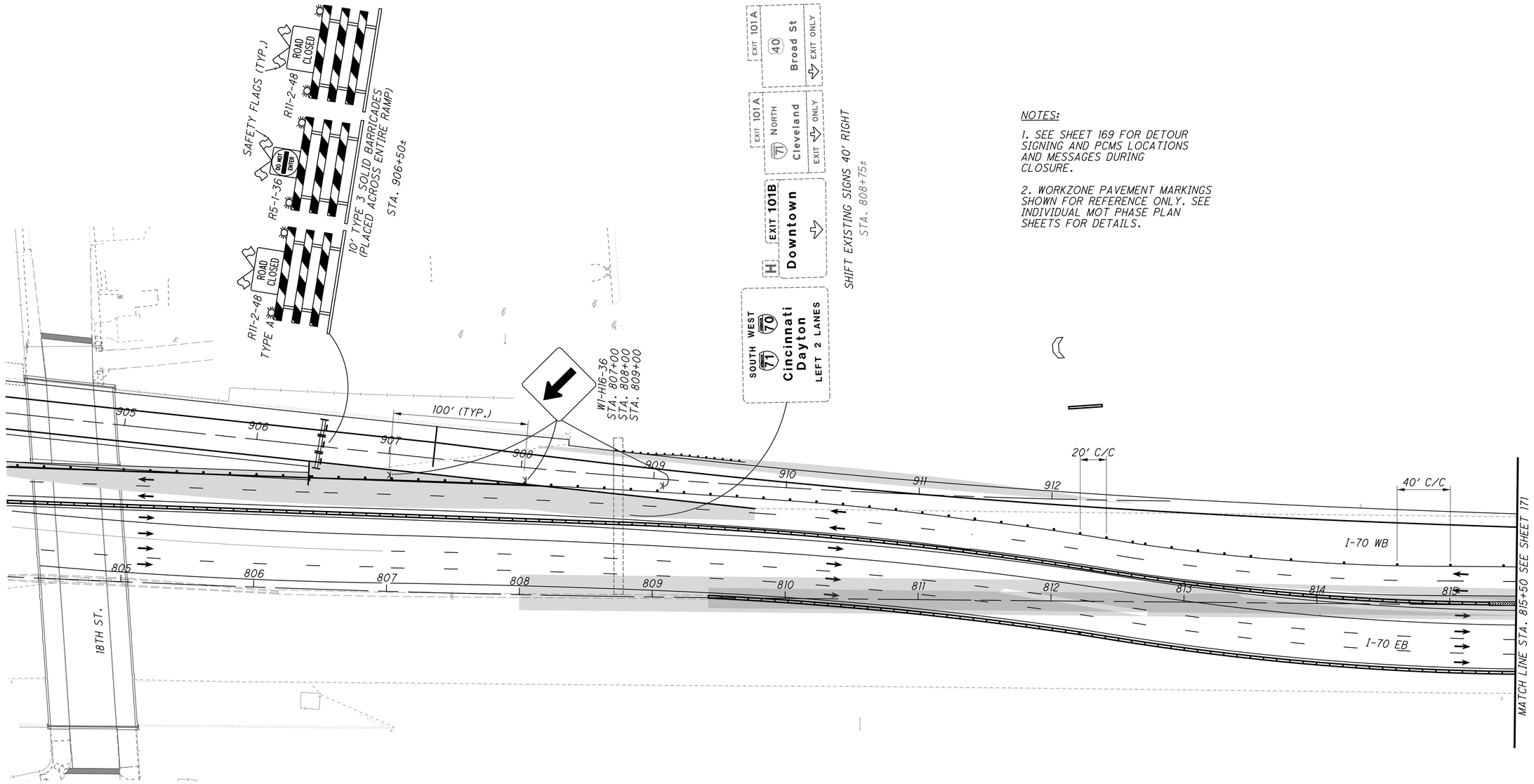

NOTES:

1. SEE SHEET 169 FOR DETOUR SIGNING AND PCMS LOCATIONS AND MESSAGES DURING CLOSURE.

2. WORKZONE PAVEMENT MARKINGS SHOWN FOR REFERENCE ONLY. SEE INDIVIDUAL MOT PHASE PLAN SHEETS FOR DETAILS.

SHEET LEGEND

TEMPORARY PAVEMENT PLACED PRIOR TO THIS PHASE

TEMPORARY PAVEMENT PLACED DURING THIS PHASE

WORK AREA

FOR COMPLETE LEGEND AND DRUM SPACING CHART, SEE SHEET 156

HORIZONTAL SCALE IN FEET 0 20 40 80

CALCULATED JAH
CHECKED JML

MAINTENANCE OF TRAFFIC
TYPICAL DETAILS- I-70 WB TO I-71 NB CLOSURE

FRA-70-14.54

PLOT.CEL
ms consultants, inc.
msconsultants.com
Ohio DOT Workspace
70\71 East Interchange 2E
www.msconsultants.com
Batchplot Spec: \\msconsultants.com\files\production\03\60\06634_2E\standards\plotdrv\batchplt.spc
Pen Table: \\msconsultants.com\files\Standards\ustn\ohdot\V8i\ms\plotting\pen\V8i_ms_std.tbl
Plot Driver: \\msconsultants.com\files\Standards\ustn\ohdot\v8i\ms\plotting\PDF.pltcfg
34" x 22"
Model: Sheet View: FENCE_VIEW1
Printed: 9/28/2018 @ 10:09:26 AM By: kryan
File: N:\03\60\06634_2E\mot\sheets\105322MP3001.dgn
ms consultants, inc.

PLOT.CEL

ms consultants, inc.
msconsultants.com

Batchplot Spec: \\msconsultants.com\files\production\03\60\06634_2E\standards\plotdrv\batchplt.spc
Pen Table: \\msconsultants.com\files\Standards\usth\ohdot\V8i\ms\plotting\pen\V8i_ms_std.tbl
Plot Driver: \\msconsultants.com\files\Standards\usth\ohdot\v8i\ms\plotting\PDF.pltcfg

Ohio DOT Workspace
70\71 East Interchange 2E
PDF: ohdot\V8i
PDF: 60-06634_2E_Columbus

www.msconsultants.com

0 1" 0.5"

34" x 22"

Model: Sheet
Printed: 9/28/2018 @ 10:09:29 AM
File: N:\03\60\06634_2E\mot\sheets\105322MP3002.dgn
View: FENCE_VIEW1
By: kryan

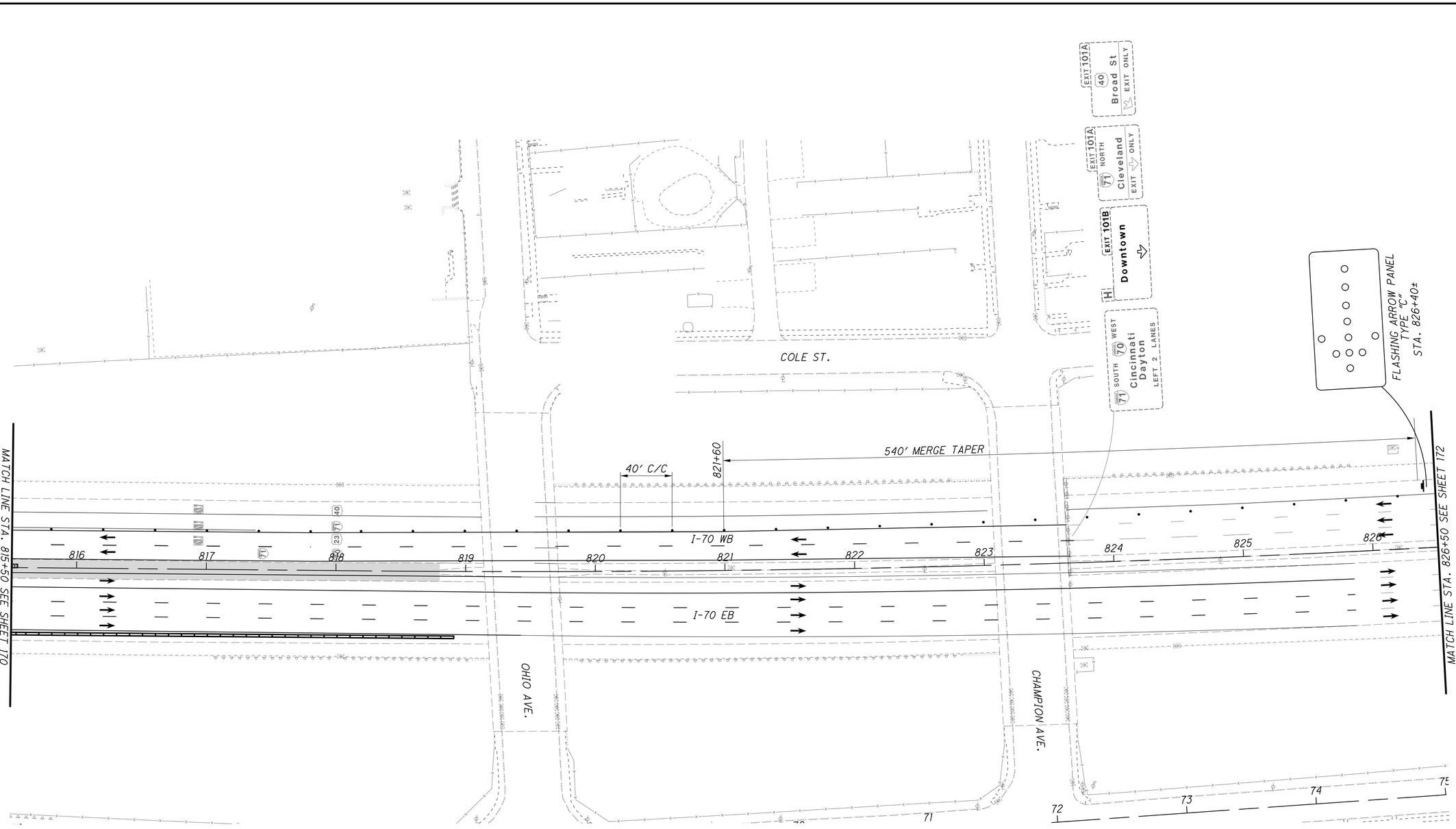

NOTES:

1. SEE SHEET 169 FOR DETOUR SIGNING AND PCMS LOCATIONS AND MESSAGES DURING CLOSURE.

2. WORKZONE PAVEMENT MARKINGS SHOWN FOR REFERENCE ONLY. SEE INDIVIDUAL MOT PHASE PLAN SHEETS FOR DETAILS.

SHEET LEGEND

- TEMPORARY PAVEMENT PLACED PRIOR TO THIS PHASE
- TEMPORARY PAVEMENT PLACED DURING THIS PHASE
- WORK AREA

FOR COMPLETE LEGEND AND DRUM SPACING CHART, SEE SHEET 156

HORIZONTAL SCALE IN FEET
0 20 40 80

CALCULATED JAH
CHECKED JML

MAINTENANCE OF TRAFFIC
TYPICAL DETAILS- I-70 WB TO I-71 NB CLOSURE

FRA-70-14.54

171
2317

ms consultants, inc.

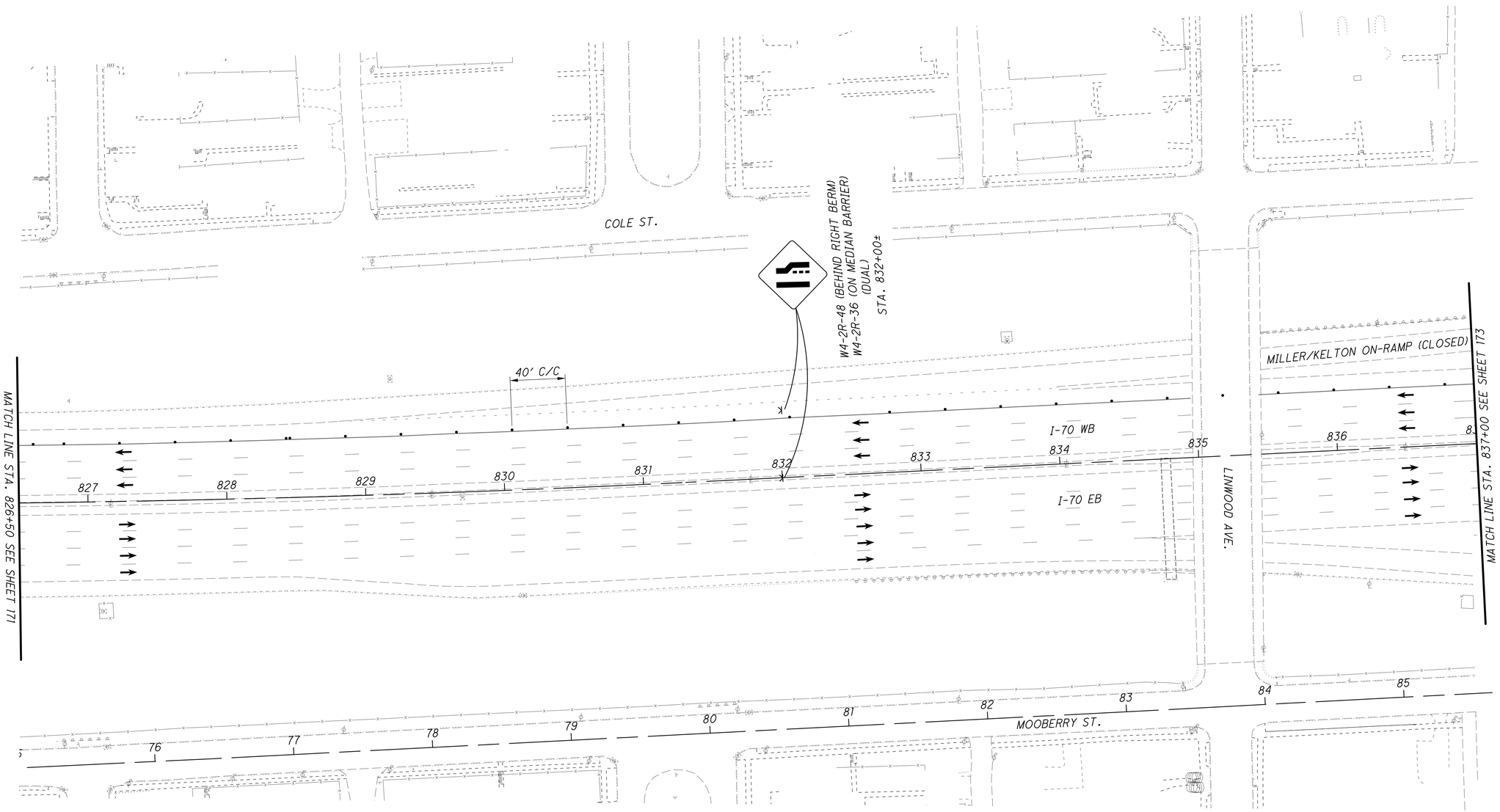

NOTES:

1. SEE SHEET 169 FOR DETOUR SIGNING AND PCMS LOCATIONS AND MESSAGES DURING CLOSURE.

SHEET LEGEND

TEMPORARY PAVEMENT PLACED PRIOR TO THIS PHASE

TEMPORARY PAVEMENT PLACED DURING THIS PHASE

WORK AREA

FOR COMPLETE LEGEND AND DRUM SPACING CHART, SEE SHEET 156

HORIZONTAL SCALE IN FEET 0 20 40 80

CALCULATED JAH
CHECKED JML

MAINTENANCE OF TRAFFIC
TYPICAL DETAILS- I-70 WB TO I-71 NB CLOSURE

FRA-70-14.54

ms consultants, inc.

PLOT.CEL
ms consultants, inc.
msconsultants.com
Ohio DOT Workspace
70\71 East Interchange 2E
www.msconsultants.com
Batchplot Spec: \\msconsultants.com\files\production\03\60\06634_2E\standards\plotdrv\batchplt.spc
Pen Table: \\msconsultants.com\files\Standards\ustn\ohdot\V8i\ms\plotting\pen\V8i_ms_std.tbl
Plot Driver: \\msconsultants.com\files\Standards\ustn\ohdot\v8i\ms\plotting\PDF.pltcfg
34" x 22"
Model: Sheet
Printed: 9/28/2018 @ 10:09:32 AM
File: N:\03\60\06634_2E\mot\sheets\105322MP3003.dgn
View: FENCE_VIEW1
By: kryan

PLOT.CEL

ms consultants, inc.
msconsultants.com

www.msconsultants.com

Ohio DOT Workspace
70\71 East Interchange 2E

0 0.5" 1"

Batchplot Spec: \\msconsultants.com\Files\Production\03\60\06634_2E\standards\plotdrv\batchplt.spc
Pen Table: \\msconsultants.com\Files\Standards\usth\ohdot\V8i\ms\plotting\pen\V8i_ms_std.tbl
Plot Driver: \\msconsultants.com\Files\Standards\usth\ohdot\V8i\ms\plotting\PDF: ohdot\V8i
PLCF: 60-06634_2E_Columbus

Model: Sheet View: FENCE_VIEW1
Printed: 9/28/2018 @ 10:09:34 AM By: kryan
File: N:\03\60\06634_2E\met\sheets\105322MP3004.dgn

34" x 22"

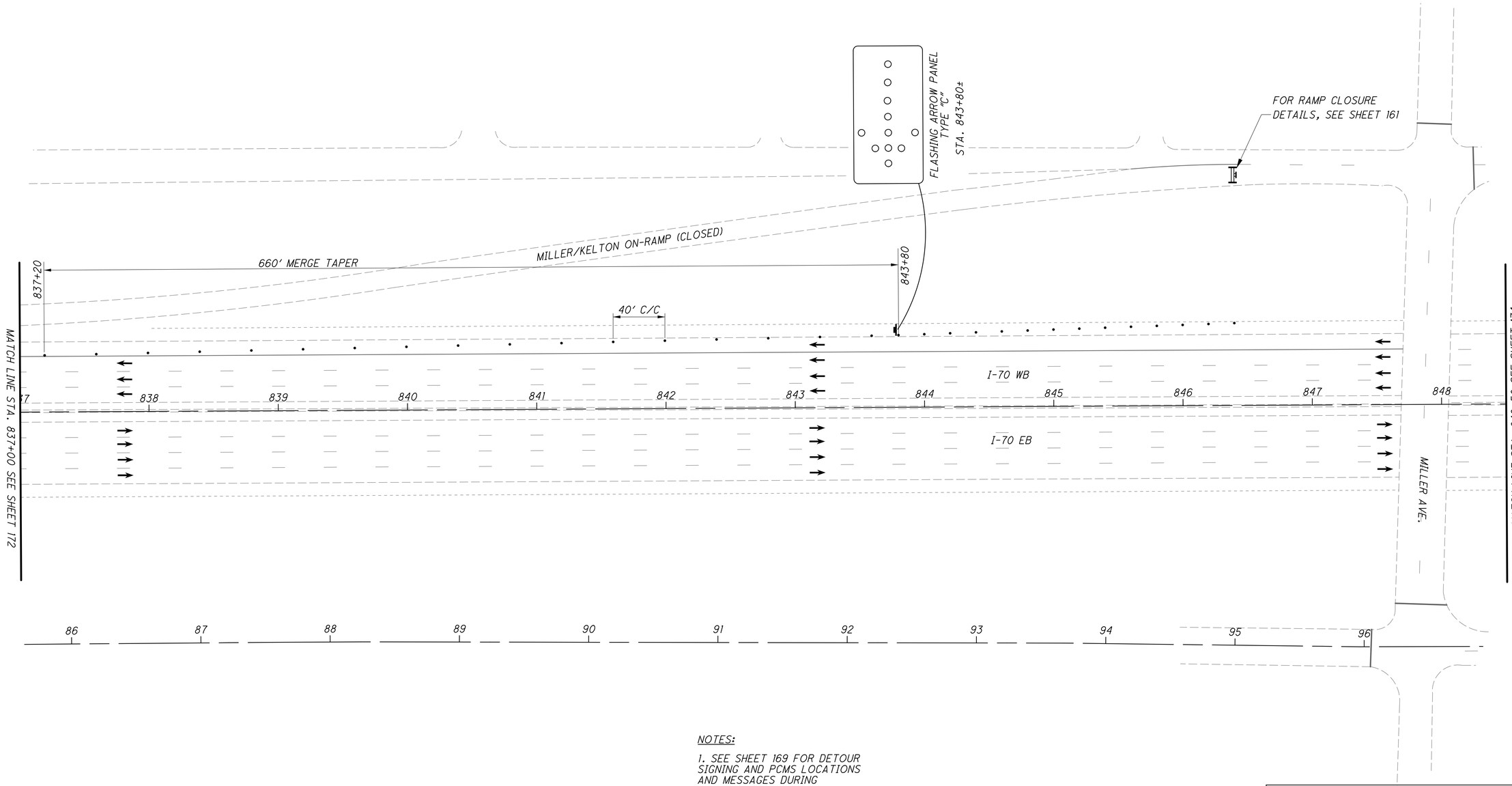

NOTES:

1. SEE SHEET 169 FOR DETOUR SIGNING AND PCMS LOCATIONS AND MESSAGES DURING CLOSURE.

SHEET LEGEND

- TEMPORARY PAVEMENT PLACED PRIOR TO THIS PHASE
- TEMPORARY PAVEMENT PLACED DURING THIS PHASE
- WORK AREA

FOR COMPLETE LEGEND AND DRUM SPACING CHART, SEE SHEET 156

HORIZONTAL SCALE IN FEET
0 20 40 80

CALCULATED JAH
CHECKED JML

MAINTENANCE OF TRAFFIC
TYPICAL DETAILS- I-70 WB TO I-71 NB CLOSURE

FRA-70-14.54

173
2317

ms consultants, inc.

PLOT.CEL

ms consultants, inc.
msconsultants.com

Batchplot Spec: \\msconsultants.com\files\production\03\60\06634_2E\standards\plotdr\batchplt.spc
Pen Table: \\msconsultants.com\files\Standards\ustn\ohdot\V8i\ms\plotting\pen\V8i_ms_std.tbl
Plot Driver: \\msconsultants.com\files\Standards\ustn\ohdot\v8i\ms\plotting\PDF.pltcfg

Ohio DOT Workspace
70\71 East Interchange 2E
DGN: ohdot\V8i\
DCF: 60-06634_2E_Columbus

www.msconsultants.com

0 1" 0.5"

34" x 22"

Model: Sheet
Printed: 9/28/2018 @ 10:09:37 AM
File: N:\03\60\06634_2E\mot\sheets\V05322MP3005.dgn
View: FENCE_VIEW1
By: kryan

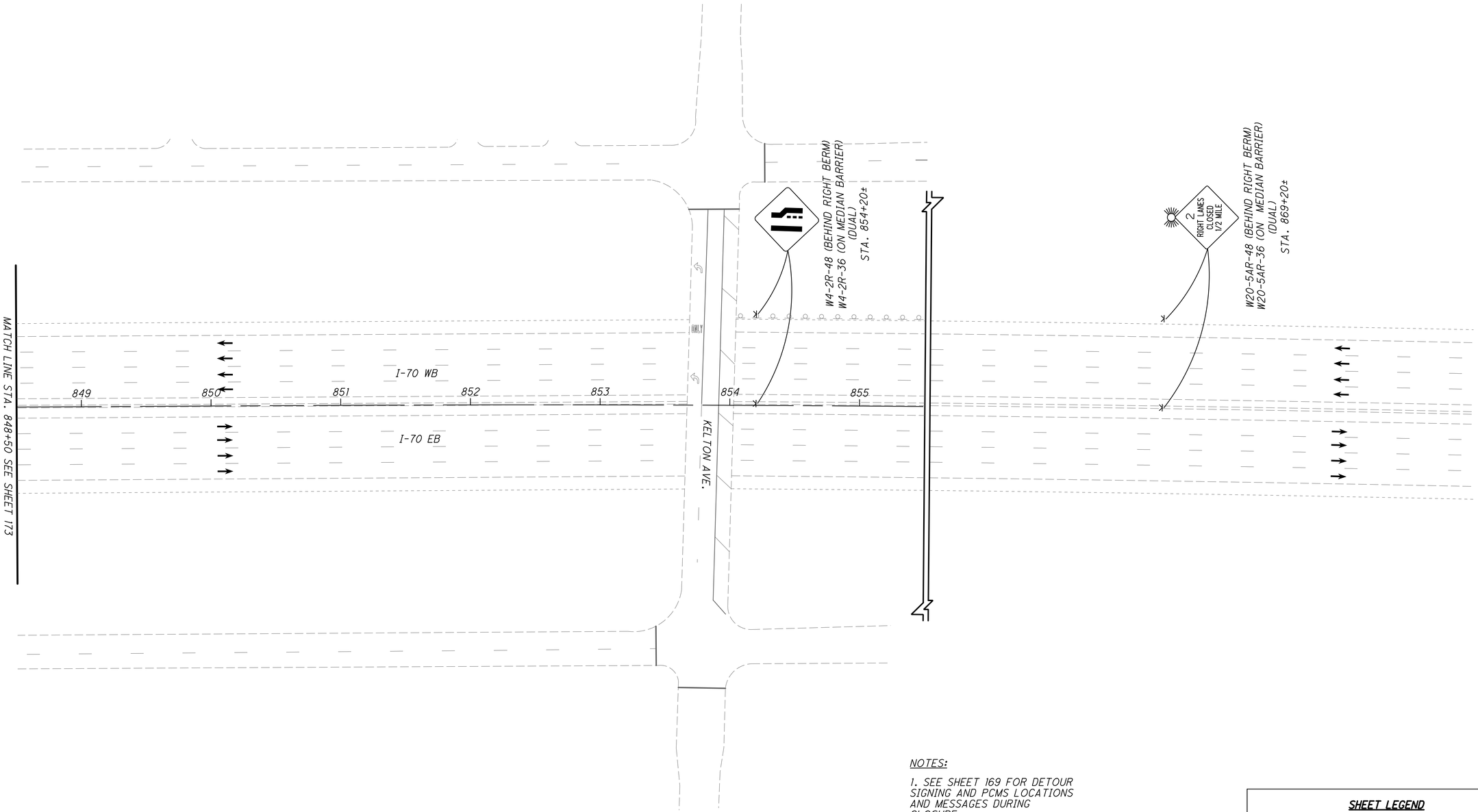

NOTES:

1. SEE SHEET 169 FOR DETOUR SIGNING AND PCMS LOCATIONS AND MESSAGES DURING CLOSURE.

SHEET LEGEND

- TEMPORARY PAVEMENT PLACED PRIOR TO THIS PHASE
- TEMPORARY PAVEMENT PLACED DURING THIS PHASE
- WORK AREA

FOR COMPLETE LEGEND AND DRUM SPACING CHART, SEE SHEET 156

0 20 40 80
HORIZONTAL SCALE IN FEET

CALCULATED JAH
CHECKED JML

MAINTENANCE OF TRAFFIC
TYPICAL DETAILS - I-70 WB TO I-71 NB CLOSURE

FRA-70-14.54

174
2317

ms consultants, inc.

PLOT.CEL
ms consultants, inc.
msconsultants.com
Ohio DOT Workspace
70\71 East Interchange 2E
www.msconsultants.com
Batchplot Spec: \\msconsultants.com\files\production\03\60\06634_2E\standards\plotdrv\batchplt.spc
Pen Table: \\msconsultants.com\files\Standards\ustn\ohdot\V8i\ms\plotting\pen\V8i_ms_std.tbl
Plot Driver: \\msconsultants.com\files\Standards\ustn\ohdot\v8i\ms\plotting\PDF.pltcfg
PCF: 60-06634_2E_Columbus
34" x 22"
View: FENCE_VIEW1
By: kryan
Model: Sheet
Printed: 9/28/2018 @ 10:09:38 AM
File: N:\03\60\06634_2E\mot\sheets\105322MD3002.dgn

MESSAGES FOR PORTABLE CHANGEABLE MESSAGE SIGNS

FIRST LINE TO BE DAY OF WEEK

(2 SEC)	(2 SEC)
I-71 SB CLOSES AT I-670	XXXXX 11PM TO 5AM

1*

(2 SEC)	(2 SEC)
I-71 SB CLOSED AT I-670	USE 670W TO 315S

1

(2 SEC)	(2 SEC)
I-70 EB TRAFFIC	USE 315S TO 71S

3

(2 SEC)	(2 SEC)
I-71 SB I-70 EB TRAFFIC	USE 315S TO 71S

2

(2 SEC)	(2 SEC)
I-71 SB TRAFFIC	USE 670W TO 315S

4

SAFETY FLAGS (TYP.)

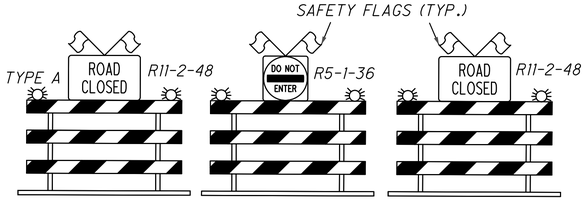

10' TYPE 3 SOLID BARRICADES
(PLACED ACROSS ENTIRE RAMP)

5

LEGEND

- PORTABLE CHANGEABLE MESSAGE SIGN
- WORK ZONE SIGN W/ SUPPORT
- TYPE 3 BARRICADES W/ SIGN
- DETOUR ROUTE

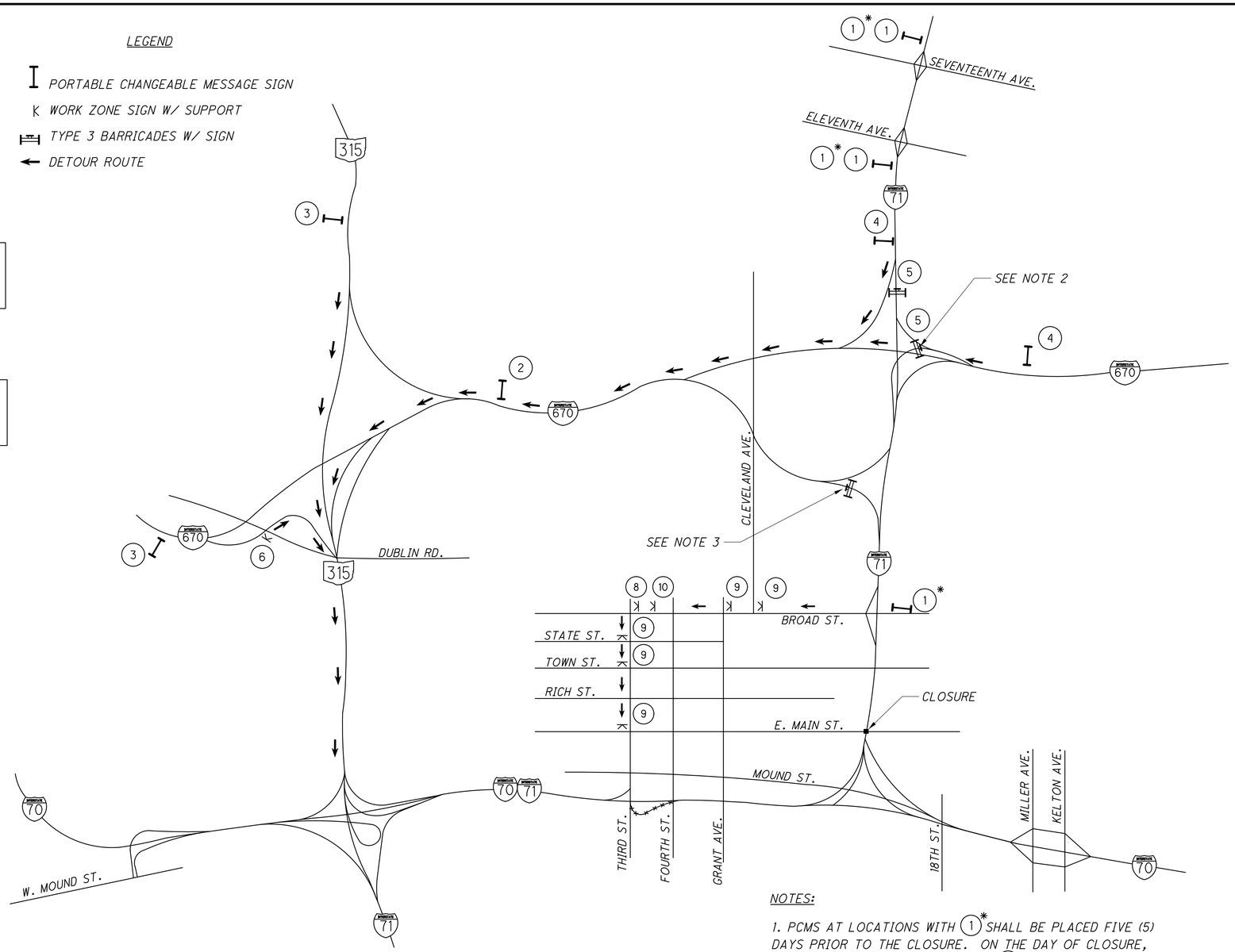

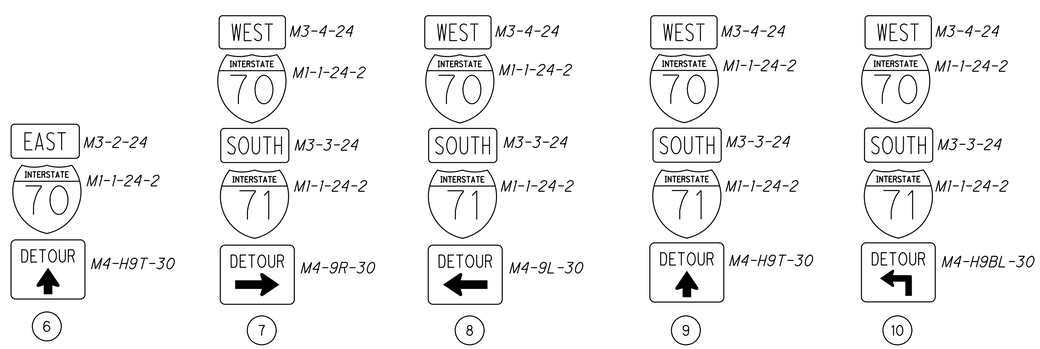

NOTES:

1. PCMS AT LOCATIONS WITH 1* SHALL BE PLACED FIVE (5) DAYS PRIOR TO THE CLOSURE. ON THE DAY OF CLOSURE, USE MESSAGES AS SHOWN ON PCMS 1.

2. SEE SHEETS 176-182 FOR MAINTENANCE OF TRAFFIC SET-UP TO CLOSE THE 670 WB TO I-71 SB RAMP.

3. SEE SHEETS 183-186 FOR MAINTENANCE OF TRAFFIC SET-UP TO CLOSE THE 670 EB TO I-71 RAMP.

4. THIS DETOUR SHALL BE UTILIZED DURING THE REMOVAL OR INSTALLATION OF BEAMS ON STRUCTURES, REMOVAL OR INSTALLATION OF OVERHEAD SIGN SUPPORT TRUSSES, OVERHEAD SIGN SUPPORT CANTILEVERS, OVERHEAD SIGNS OR OVERLAYS, OR AS DIRECTED BY THE ENGINEER TO COMPLETE OTHER CONSTRUCTION ACTIVITIES WHICH CANNOT BE COMPLETED THROUGH THE USE OF SINGLE LANE OR SHOULDER CLOSURES AND WHICH REQUIRE CLOSURE OF I-71 SB MAINLINE AND SHALL ONLY BE PERMITTED FROM 10:00 P.M. TO 5:00 A.M., DAILY.

CALCULATED JAH
CHECKED JML

TYPICAL DETOUR - I-71 SB MAINLINE CLOSURE

FRA-70-14.54

ms consultants, inc.

PLOT.CEL

ms consultants, inc.
msconsultants.com

www.msconsultants.com

Ohio DOT Workspace
70\71 East Interchange 2E

0 0.5" 1"

Batchplot Spec: \\msconsultants.com\Files\Production\03\60\06634.2E\standards\plotdr\batchplt.spc
Pen Table: \\msconsultants.com\Files\Standards\ustn\ohdot\V8i\ms\plotting\pen\V8i_ms_std.tbl PDF: ohdot_V8i
Plot Driver: \\msconsultants.com\Files\Standards\ustn\ohdot\V8i\ms\plotting\PDF.pltcfg PCF: 60-06634_2E_Columbus

Model: Sheet View: FENCE_VIEW1
Printed: 9/28/2018 @ 10:09:40 AM By: kryan
File: N:\03\60\06634.2E\mot\sheets\05322MP3011.dgn

34" x 22"

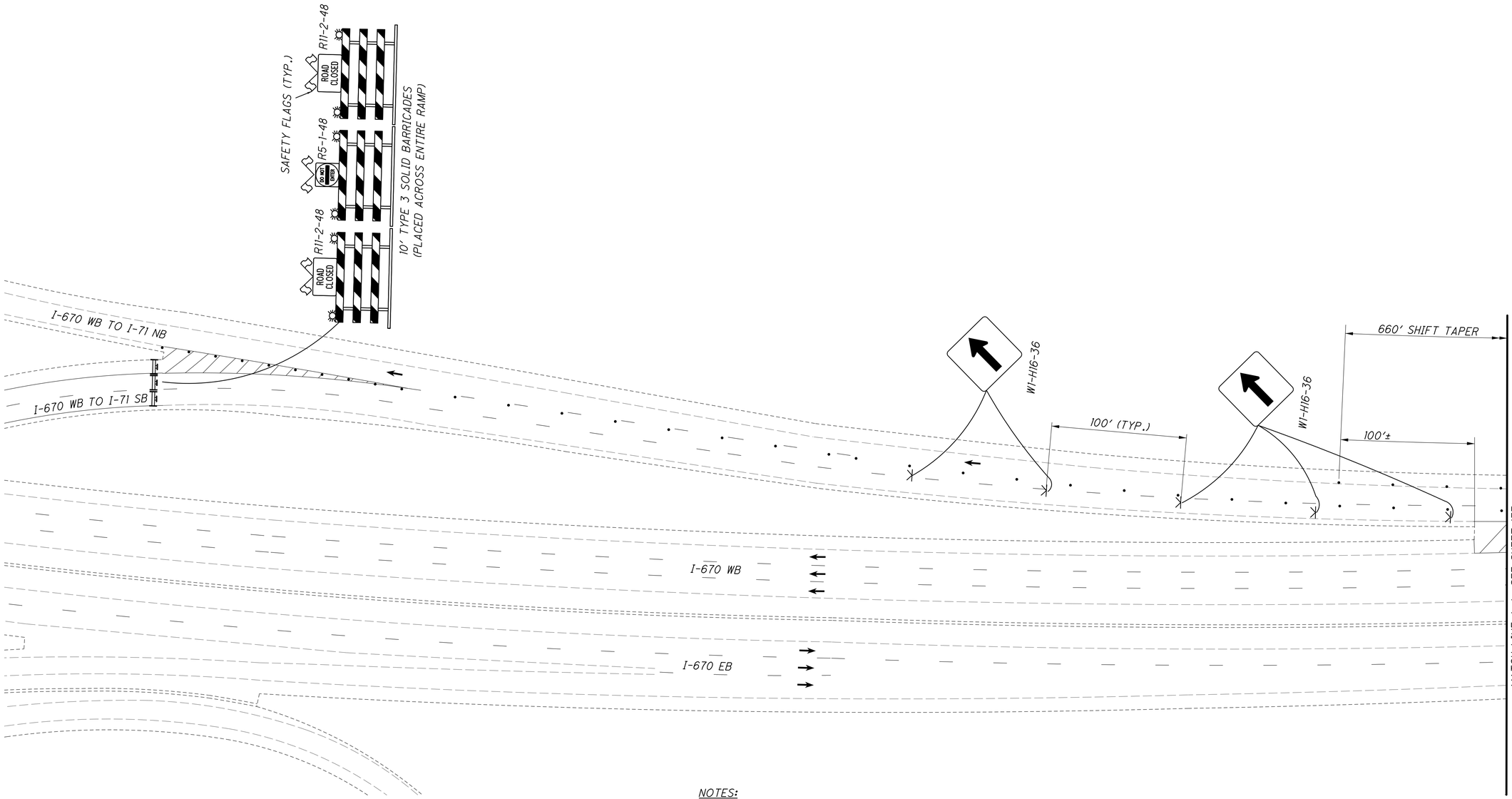

NOTES:

1. THE PROPOSED MAPPING OF THE I-71 & I-670 INTERCHANGE CONSTRUCTION, PROJECT FRA-71-17.76, IS NOT BASED UPON AN ACTUAL FIELD SURVEY AND IS SHOWN FOR REFERENCE ONLY. THIS MAPPING IS SUBJECT TO CHANGE PRIOR TO COMPLETION OF SAID PROJECT. MAINTENANCE OF TRAFFIC DEVICES SHOWN ON THESE SHEETS MAY REQUIRE ADJUSTMENT TO FIT THE FINAL FIELD CONDITIONS. ANY ADJUSTMENTS SHALL BE APPROVED BY THE ENGINEER.

2. SEE SHEET 175 FOR DETOUR SIGNING AND PCMS LOCATIONS AND MESSAGES DURING CLOSURE.

3. WORKZONE PAVEMENT MARKINGS SHOWN FOR REFERENCE ONLY. SEE INDIVIDUAL MOT PHASE PLAN SHEETS FOR DETAILS.

SHEET LEGEND

- TEMPORARY PAVEMENT PLACED PRIOR TO THIS PHASE
- TEMPORARY PAVEMENT PLACED DURING THIS PHASE
- WORK AREA

FOR COMPLETE LEGEND AND DRUM SPACING CHART, SEE SHEET 156

0 20 40 80
HORIZONTAL SCALE IN FEET

CALCULATED JAH
CHECKED JML

MAINTENANCE OF TRAFFIC
TYPICAL DETAILS- I-670WB TO I-71SB CLOSURE

FRA-70-14.54

176
2317

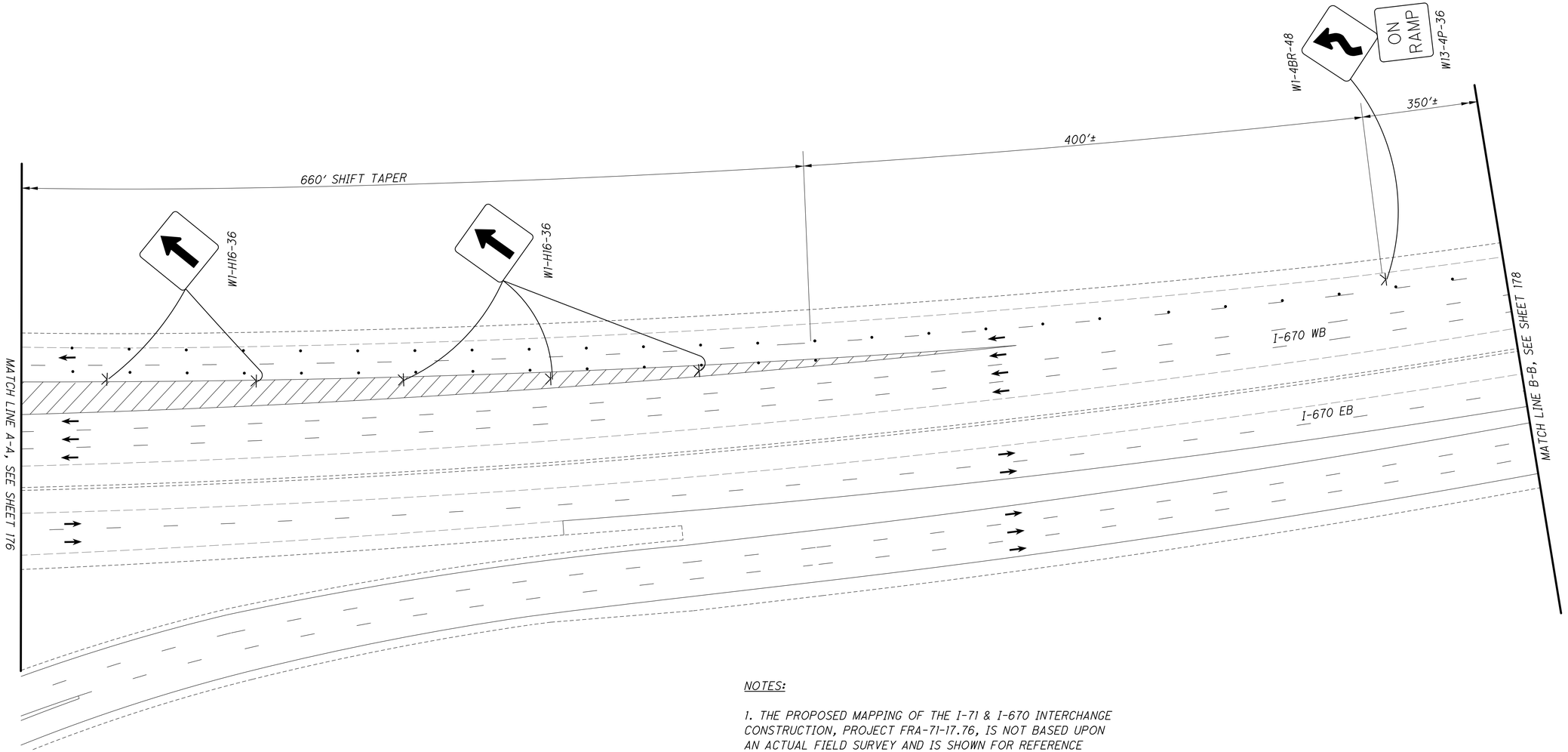

NOTES:

1. THE PROPOSED MAPPING OF THE I-71 & I-670 INTERCHANGE CONSTRUCTION, PROJECT FRA-71-17.76, IS NOT BASED UPON AN ACTUAL FIELD SURVEY AND IS SHOWN FOR REFERENCE ONLY. THIS MAPPING IS SUBJECT TO CHANGE PRIOR TO COMPLETION OF SAID PROJECT. MAINTENANCE OF TRAFFIC DEVICES SHOWN ON THESE SHEETS MAY REQUIRE ADJUSTMENT TO FIT THE FINAL FIELD CONDITIONS. ANY ADJUSTMENTS SHALL BE APPROVED BY THE ENGINEER.

2. SEE SHEET 175 FOR DETOUR SIGNING AND PCMS LOCATIONS AND MESSAGES DURING CLOSURE.

3. WORKZONE PAVEMENT MARKINGS SHOWN FOR REFERENCE ONLY. SEE INDIVIDUAL MOT PHASE PLAN SHEETS FOR DETAILS.

SHEET LEGEND

TEMPORARY PAVEMENT PLACED PRIOR TO THIS PHASE

TEMPORARY PAVEMENT PLACED DURING THIS PHASE

WORK AREA

FOR COMPLETE LEGEND AND DRUM SPACING CHART, SEE SHEET 156

0 20 40 80
HORIZONTAL SCALE IN FEET

CALCULATED JAH
CHECKED JML

MAINTENANCE OF TRAFFIC
TYPICAL DETAILS- I-670WB TO I-71SB CLOSURE

FRA-70-14.54

ms consultants, inc.

PLOT.CEL
ms consultants, inc.
msconsultants.com
Ohio DOT Workspace
70\71 East Interchange 2E
www.msconsultants.com
Batchplot Spec: \\msconsultants.com\files\production\03\60\06634_2E\standards\plotdrv\batchplt.spc
Pen Table: \\msconsultants.com\files\Standards\ustn\ohdot\V8i\ms\plotting\pen\V8i_ms_std.tbl
Plot Driver: \\msconsultants.com\files\Standards\ustn\ohdot\v8i\ms\plotting\PDF.pltcfg
34" x 22"
Model: Sheet
Printed: 9/28/2018 @ 10:09:42 AM
File: N:\03\60\06634_2E\mot\sheets\105322MP3012.dgn
View: FENCE_VIEW1
By: kryan

PLOT.CEL

ms consultants, inc.
msconsultants.com

Batchplot Spec: \\msconsultants.com\Files\Production\03\60\06634_2E\standards\plotdr\batchplt.spc
Pen Table: \\msconsultants.com\Files\Standards\ustn\ohdot\V8i\ms\plotting\pen\V8i_ms_std.tbl
Plot Driver: \\msconsultants.com\Files\Standards\ustn\ohdot\v8i\ms\plotting\PDF.pltcfg

Ohio DOT Workspace
70\71 East Interchange 2E
PDF: ohdot\V8i
DGN: 60-06634_2E_Columbus

www.msconsultants.com

1"
0.5"
0

34" x 22"

Model: Sheet
Printed: 9/28/2018 @ 10:09:44 AM
File: N:\03\60\06634_2E\met\Sheets\105322MP3013.dgn
View: FENCE_VIEW1
By: kryan

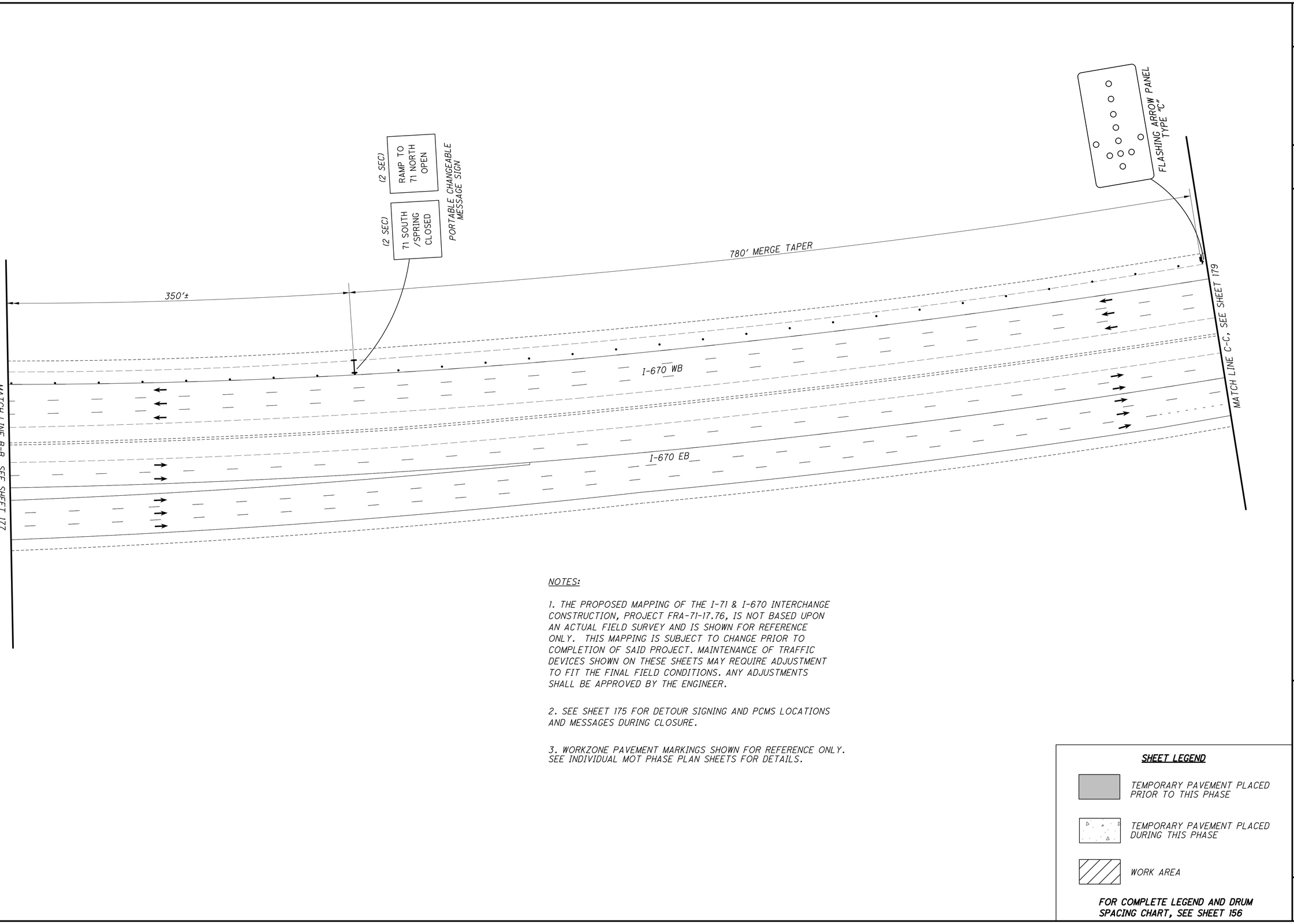

NOTES:

1. THE PROPOSED MAPPING OF THE I-71 & I-670 INTERCHANGE CONSTRUCTION, PROJECT FRA-71-17.76, IS NOT BASED UPON AN ACTUAL FIELD SURVEY AND IS SHOWN FOR REFERENCE ONLY. THIS MAPPING IS SUBJECT TO CHANGE PRIOR TO COMPLETION OF SAID PROJECT. MAINTENANCE OF TRAFFIC DEVICES SHOWN ON THESE SHEETS MAY REQUIRE ADJUSTMENT TO FIT THE FINAL FIELD CONDITIONS. ANY ADJUSTMENTS SHALL BE APPROVED BY THE ENGINEER.

2. SEE SHEET 175 FOR DETOUR SIGNING AND PCMS LOCATIONS AND MESSAGES DURING CLOSURE.

3. WORKZONE PAVEMENT MARKINGS SHOWN FOR REFERENCE ONLY. SEE INDIVIDUAL MOT PHASE PLAN SHEETS FOR DETAILS.

SHEET LEGEND

- TEMPORARY PAVEMENT PLACED PRIOR TO THIS PHASE
- TEMPORARY PAVEMENT PLACED DURING THIS PHASE
- WORK AREA

FOR COMPLETE LEGEND AND DRUM SPACING CHART, SEE SHEET 156

HORIZONTAL SCALE IN FEET
0 20 40 80

CALCULATED JAH
CHECKED JML

MAINTENANCE OF TRAFFIC

TYPICAL DETAILS- I-670WB TO I-71SB CLOSURE

FRA-70-14.54

ms consultants, inc.

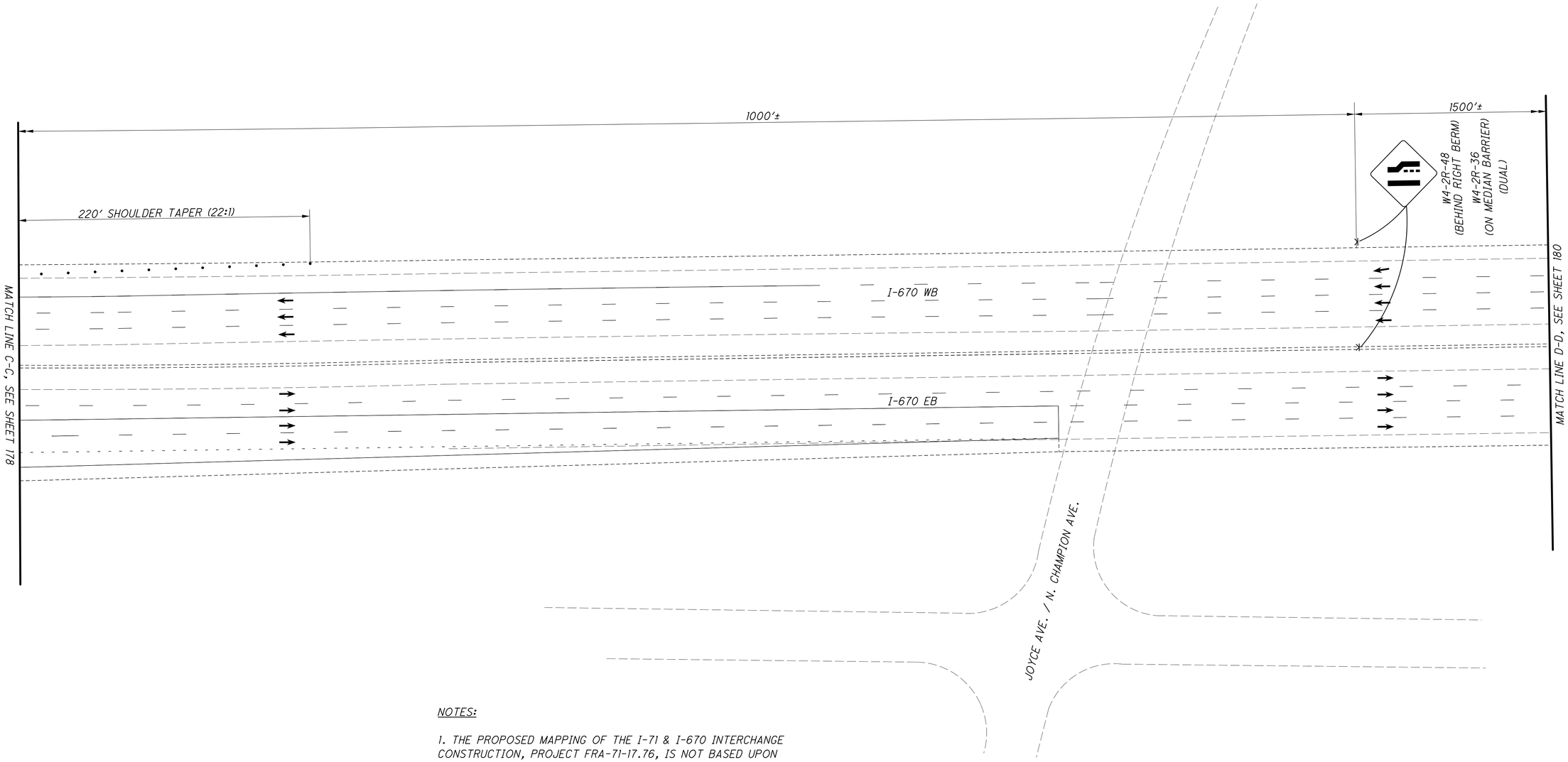

NOTES:

1. THE PROPOSED MAPPING OF THE I-71 & I-670 INTERCHANGE CONSTRUCTION, PROJECT FRA-71-17.76, IS NOT BASED UPON AN ACTUAL FIELD SURVEY AND IS SHOWN FOR REFERENCE ONLY. THIS MAPPING IS SUBJECT TO CHANGE PRIOR TO COMPLETION OF SAID PROJECT. MAINTENANCE OF TRAFFIC DEVICES SHOWN ON THESE SHEETS MAY REQUIRE ADJUSTMENT TO FIT THE FINAL FIELD CONDITIONS. ANY ADJUSTMENTS SHALL BE APPROVED BY THE ENGINEER.

2. SEE SHEET 175 FOR DETOUR SIGNING AND PCMS LOCATIONS AND MESSAGES DURING CLOSURE.

3. WORKZONE PAVEMENT MARKINGS SHOWN FOR REFERENCE ONLY. SEE INDIVIDUAL MOT PHASE PLAN SHEETS FOR DETAILS.

SHEET LEGEND

TEMPORARY PAVEMENT PLACED PRIOR TO THIS PHASE

TEMPORARY PAVEMENT PLACED DURING THIS PHASE

WORK AREA

FOR COMPLETE LEGEND AND DRUM SPACING CHART, SEE SHEET 156

0 20 40 80
HORIZONTAL SCALE IN FEET

CALCULATED JAH
CHECKED JML

MAINTENANCE OF TRAFFIC
TYPICAL DETAILS- I-670WB TO I-71SB CLOSURE

FRA-70-14.54

ms consultants, inc.

PLOT.CEL
ms consultants, inc.
msconsultants.com
Ohio DOT Workspace
70\71 East Interchange 2E
www.msconsultants.com
Batchplot Spec: \\msconsultants.com\files\production\03\60\06634_2E\standards\plotdrv\batchplt.spc
Pen Table: \\msconsultants.com\files\Standards\ustn\ohdot\V8i\ms\plotting\pen\V8i_ms_std.tbl PCF: ohdotV8i
Plot Driver: \\msconsultants.com\files\Standards\ustn\ohdot\v8i\ms\plotting\PDF.pltcfg
34" x 22"
Model: Sheet View: FENCE_VIEW1
Printed: 9/28/2018 @ 10:09:45 AM By: kryan
File: N:\03\60\06634_2E\mot\sheets\105322MP3014.dgn

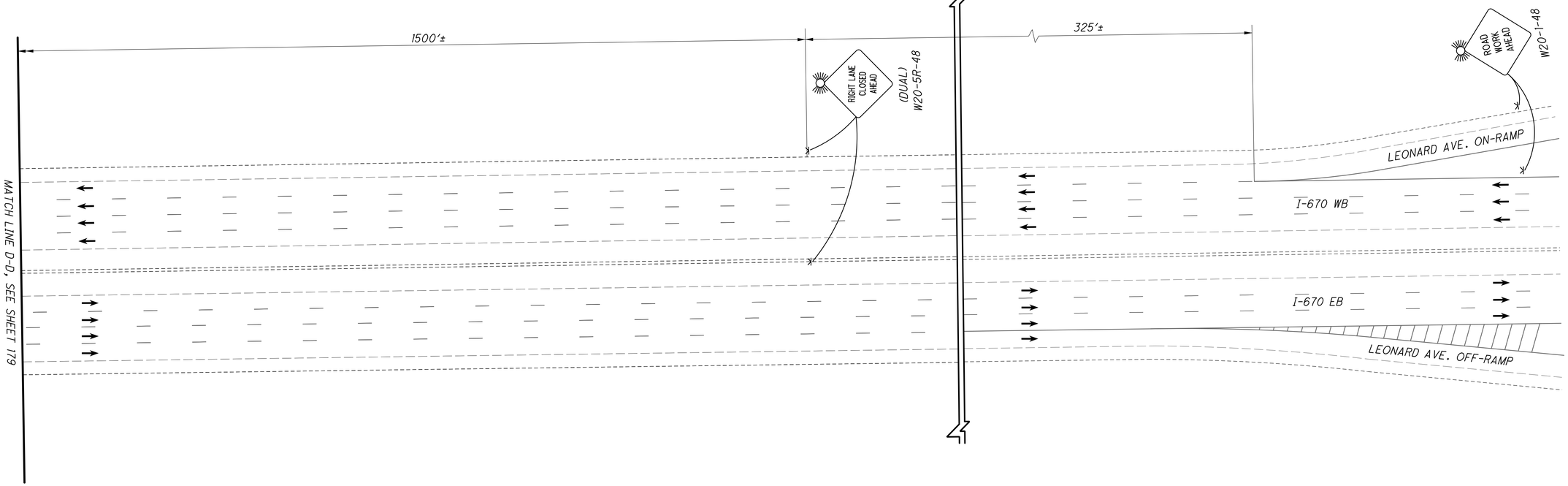

NOTES:

1. THE PROPOSED MAPPING OF THE I-71 & I-670 INTERCHANGE CONSTRUCTION, PROJECT FRA-71-17.76, IS NOT BASED UPON AN ACTUAL FIELD SURVEY AND IS SHOWN FOR REFERENCE ONLY. THIS MAPPING IS SUBJECT TO CHANGE PRIOR TO COMPLETION OF SAID PROJECT. MAINTENANCE OF TRAFFIC DEVICES SHOWN ON THESE SHEETS MAY REQUIRE ADJUSTMENT TO FIT THE FINAL FIELD CONDITIONS. ANY ADJUSTMENTS SHALL BE APPROVED BY THE ENGINEER.

2. SEE SHEET 175 FOR DETOUR SIGNING AND PCMS LOCATIONS AND MESSAGES DURING CLOSURE.

3. WORKZONE PAVEMENT MARKINGS SHOWN FOR REFERENCE ONLY. SEE INDIVIDUAL MOT PHASE PLAN SHEETS FOR DETAILS.

SHEET LEGEND

TEMPORARY PAVEMENT PLACED PRIOR TO THIS PHASE

TEMPORARY PAVEMENT PLACED DURING THIS PHASE

WORK AREA

FOR COMPLETE LEGEND AND DRUM SPACING CHART, SEE SHEET 156

0 20 40 80
HORIZONTAL SCALE IN FEET

CALCULATED JAH
CHECKED JML

MAINTENANCE OF TRAFFIC
TYPICAL DETAILS- I-670WB TO I-71SB CLOSURE

FRA-70-14.54

PLOT.CEL
ms consultants, inc.
msconsultants.com
Ohio DOT Workspace
70\71 East Interchange 2E
www.msconsultants.com
Batchplot Spec: \\msconsultants.com\files\production\03\60\06634_2E\standards\plotdrv\batchplt.spc
Pen Table: \\msconsultants.com\files\Standards\ustn\ohdot\V8i\ms\plotting\pen\V8i_ms_std.tbl
Plot Driver: \\msconsultants.com\files\Standards\ustn\ohdot\v8i\ms\plotting\PDF.pltcfg
34" x 22"
Model: Sheet View: FENCE_VIEW1
Printed: 9/28/2018 @ 10:09:47 AM By: kryan
File: N:\03\60\06634_2E\mot\sheets\105322MP3015.dgn
ms consultants, inc.

PLOT.CEL

ms consultants, inc.
msconsultants.com

www.msconsultants.com

Batchplot Spec: \\msconsultants.com\files\production\03\60\06634_2E\standards\plotdrv\batchplt.spc
Pen Table: \\msconsultants.com\files\Standards\usth\ohdot\V8i\ms\plotting\pen\V8i_ms_std.tbl PDF: ohdotV8i
Plot Driver: \\msconsultants.com\files\Standards\usth\ohdot\V8i\ms\plotting\PDF.pltcfg PLOTCF: 60-06634_2E_Columbus

Ohio DOT Workspace
70\71 East Interchange 2E

Model: Sheet
Printed: 9/28/2018 @ 10:09:54 AM View: FENCE_VIEW1
File: N:\03\60\06634_2E\mot\sheets\105322MP3019.dgn By: kryan

34" x 22"

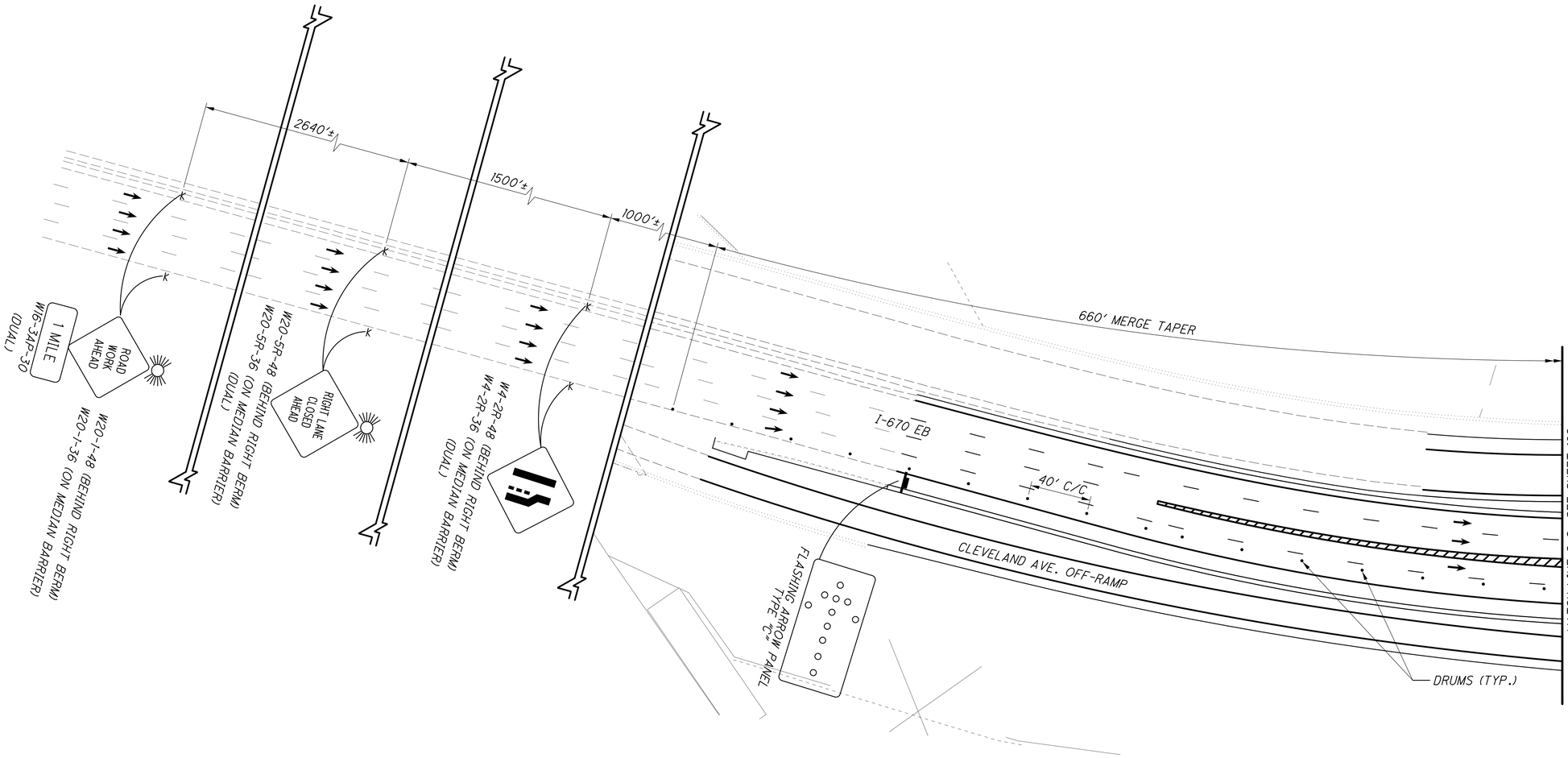

NOTES:

1. THE PROPOSED MAPPING OF THE I-71 & I-670 INTERCHANGE CONSTRUCTION, PROJECT FRA-71-17.76, IS NOT BASED UPON AN ACTUAL FIELD SURVEY AND IS SHOWN FOR REFERENCE ONLY. THIS MAPPING IS SUBJECT TO CHANGE PRIOR TO COMPLETION OF SAID PROJECT. MAINTENANCE OF TRAFFIC DEVICES SHOWN ON THESE SHEETS MAY REQUIRE ADJUSTMENT TO FIT THE FINAL FIELD CONDITIONS. ANY ADJUSTMENTS SHALL BE APPROVED BY THE ENGINEER.

2. SEE SHEET 175 FOR DETOUR SIGNING AND PCMS LOCATIONS AND MESSAGES DURING CLOSURE.

3. WORKZONE PAVEMENT MARKINGS SHOWN FOR REFERENCE ONLY. SEE INDIVIDUAL MOT PHASE PLAN SHEETS FOR DETAILS.

SHEET LEGEND

- TEMPORARY PAVEMENT PLACED PRIOR TO THIS PHASE
- TEMPORARY PAVEMENT PLACED DURING THIS PHASE
- WORK AREA

FOR COMPLETE LEGEND AND DRUM SPACING CHART, SEE SHEET 156

HORIZONTAL SCALE IN FEET
0 20 40 80

CALCULATED JAH
CHECKED JML

MAINTENANCE OF TRAFFIC
TYPICAL DETAILS- I-670EB TO I-71SB CLOSURE

FRA-70-14.54

181
2317

PLOT.CEL

ms consultants, inc.
rmsconsultants.com

Batchplot Spec: \\rmsconsultants.com\Files\production\03\60\06634.2E\standards\plotdrv\batchplt.spc
Pen Table: \\rmsconsultants.com\Files\Standards\ustn\ohdot\V8i\ms\plotting\pen\V8i_ms_std.tbl
Plot Driver: \\rmsconsultants.com\Files\Standards\ustn\ohdot\V8i\ms\plotting\PDF.pltcfg

Model: Sheet
Printed: 9/28/2018 @ 10:09:56 AM
File: N:\03\60\06634.2E\mot\sheets\105322MP-3020.dgn

View: FENCE_VIEW1
By: kryan

34" x 22"

0 0.5" 1"

Ohio DOT Workspace
70\71 East Interchange 2E

PDF: ohdot\V8i
PDF: 60-06634_2E_Columbus

www.rmsconsultants.com

MATCH LINE G-G, SEE SHEET 181

660' MERGE TAPER

660' SHIFT TAPER

W1-4R-48

W1-H16-36

I-670 EB

100' (TYP)

DRUMS (TYP.)

40' C/C

20' C/C

20' C/C

I-670 EB TO I-71 SB (CLOSED)

CLEVELAND AVE. TO I-71 NB/I-670 EB

CLEVELAND AVE. TO I-71 SB (CLOSED)

CLEVELAND AVE.

10' TYPE 3 SOLID BARRICADES (PLACED ACROSS ENTIRE RAMP)

TYPE A ROAD CLOSED R11-2-48

DO NOT ENTER R5-1-48

SAFETY FLAGS (TYP.)

FOR CONTINUATION OF PLANS, SEE SHEET 186

NOTES:

1. THE PROPOSED MAPPING OF THE I-71 & I-670 INTERCHANGE CONSTRUCTION, PROJECT FRA-71-17.76, IS NOT BASED UPON AN ACTUAL FIELD SURVEY AND IS SHOWN FOR REFERENCE ONLY. THIS MAPPING IS SUBJECT TO CHANGE PRIOR TO COMPLETION OF SAID PROJECT. MAINTENANCE OF TRAFFIC DEVICES SHOWN ON THESE SHEETS MAY REQUIRE ADJUSTMENT TO FIT THE FINAL FIELD CONDITIONS. ANY ADJUSTMENTS SHALL BE APPROVED BY THE ENGINEER.

2. SEE SHEET 175 FOR DETOUR SIGNING AND PCMS LOCATIONS AND MESSAGES DURING CLOSURE.

3. WORKZONE PAVEMENT MARKINGS SHOWN FOR REFERENCE ONLY. SEE INDIVIDUAL MOT PHASE PLAN SHEETS FOR DETAILS.

SHEET LEGEND

- TEMPORARY PAVEMENT PLACED PRIOR TO THIS PHASE
- TEMPORARY PAVEMENT PLACED DURING THIS PHASE
- WORK AREA

FOR COMPLETE LEGEND AND DRUM SPACING CHART, SEE SHEET 156

HORIZONTAL SCALE IN FEET
0 20 40 80

CALCULATED JAH
CHECKED JML

MAINTENANCE OF TRAFFIC
TYPICAL DETAILS- I-670EB TO I-71SB CLOSURE

FRA-70-14.54

182
2317

ms consultants, inc.

PLOT.CEL
ms consultants, inc.
msconsultants.com
www.msconsultants.com
Ohio DOT Workspace
70\71 East Interchange 2E
1"
0
0.5"
PCF: ohdot\V8i
PCF: 60-06634_2E_Columbus
Batchplot Spec: \\msconsultants.com\files\production\03\60\06634_2E\standards\plotdrv\batchplt.spc
Pen Table: \\msconsultants.com\files\Standards\usth\ohdot\V8i\ms\plotting\pen\V8i_ms_std.tbl
Plot Driver: \\msconsultants.com\files\Standards\usth\ohdot\V8i\ms\plotting\PDF.pltcfg
34" x 22"
View: FENCE_VIEW1
By: kryan
Model: Sheet
Printed: 9/28/2018 @ 10:09:58 AM
File: N:\03\60\06634_2E\mot\sheets\105322M000004.dgn

MESSAGES FOR PORTABLE CHANGEABLE MESSAGE SIGNS

FIRST LINE TO BE DAY OF WEEK

	(2 SEC)	(2 SEC)
1 *	71S-70E RAMP CLOSES	XXXXXX 11PM TO 5AM
1	71S-70E RAMP CLOSED	USE 670W TO 315S
4	71S RAMP CLOSED	USE 71N TO EX 110A
2	70 EAST TRAFFIC USE	EXIT 97 REENTER 70 EAST
3	70 EAST TRAFFIC	USE 315S
5	71S TRAFFIC USE	EX 110A REENTER 71 SOUTH

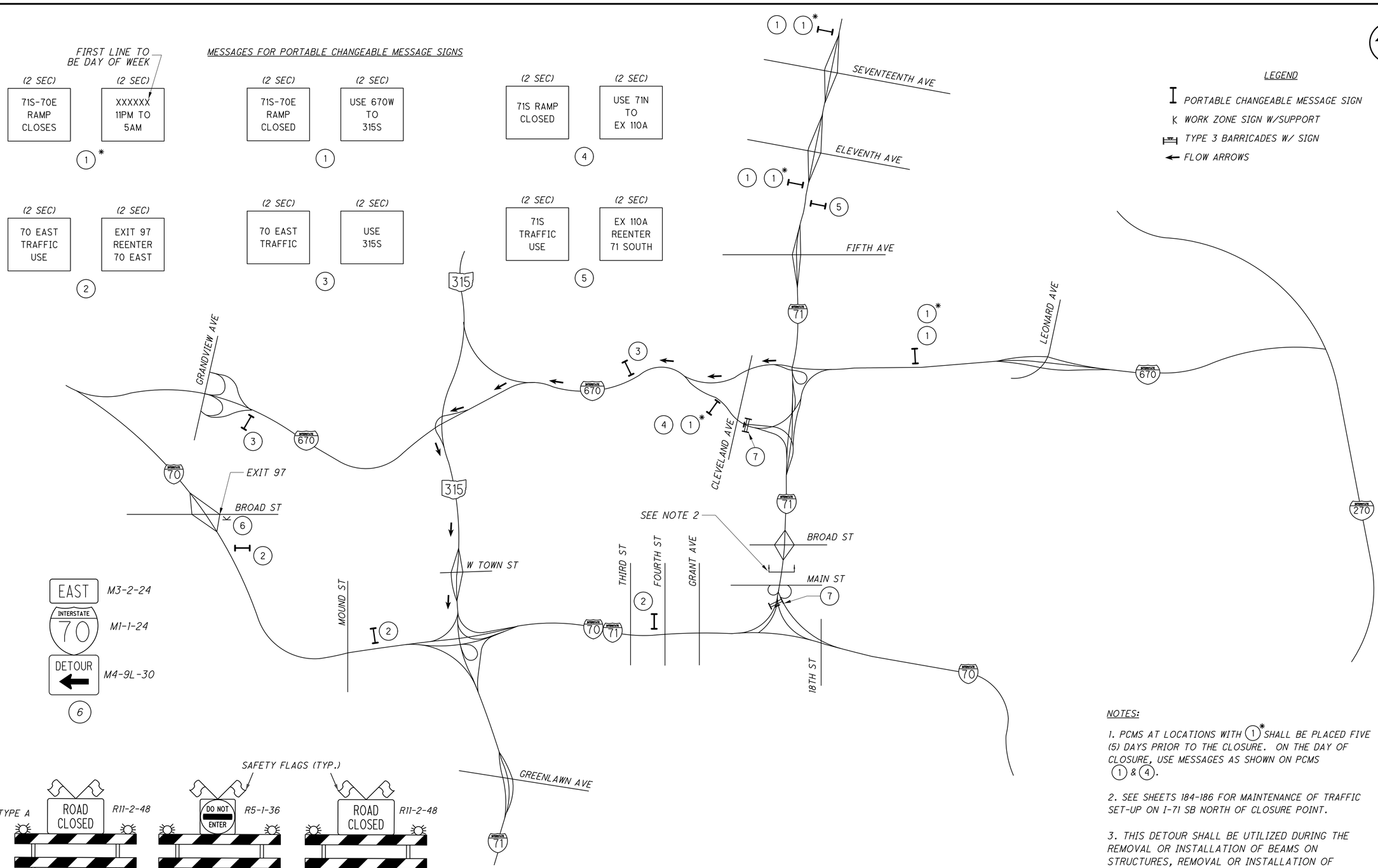

LEGEND

- PORTABLE CHANGEABLE MESSAGE SIGN
- WORK ZONE SIGN W/SUPPORT
- TYPE 3 BARRICADES W/ SIGN
- FLOW ARROWS

EAST M3-2-24
INTERSTATE 70 M1-1-24
DETOUR M4-9L-30
6

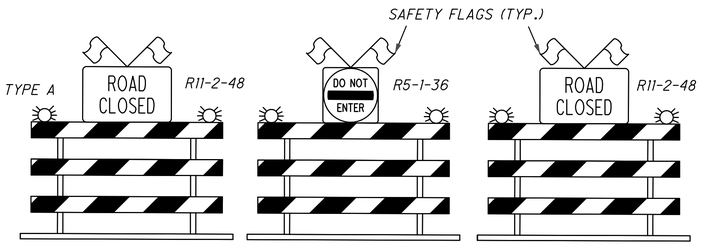

10' TYPE 3 SOLID BARRICADES
(PLACED ACROSS ENTIRE ROADWAY)
SEE SHEETS 184 FOR PLACEMENT

7

NOTES:

1. PCMS AT LOCATIONS WITH (1)* SHALL BE PLACED FIVE (5) DAYS PRIOR TO THE CLOSURE. ON THE DAY OF CLOSURE, USE MESSAGES AS SHOWN ON PCMS (1) & (4).

2. SEE SHEETS 184-186 FOR MAINTENANCE OF TRAFFIC SET-UP ON I-71 SB NORTH OF CLOSURE POINT.

3. THIS DETOUR SHALL BE UTILIZED DURING THE REMOVAL OR INSTALLATION OF BEAMS ON STRUCTURES, REMOVAL OR INSTALLATION OF OVERHEAD SIGN SUPPORT TRUSSES, OVERHEAD SIGN SUPPORT CANTILEVERS, OVERHEAD SIGNS OR OVERLAYS, OR AS DIRECTED BY THE ENGINEER TO COMPLETE OTHER CONSTRUCTION ACTIVITIES WHICH CANNOT BE COMPLETED THROUGH THE USE OF SINGLE LANE OR SHOULDER CLOSURES AND WHICH REQUIRE CLOSURE OF I-71 SB TO I-70 EB AND SHALL ONLY BE PERMITTED FROM 11:00 P.M. TO 5:00 A.M., DAILY.

CALCULATED JAH
CHECKED JML

TYPICAL DETOUR - I-71 SB TO I-70 EB CLOSURE

FRA-70-14.54

ms consultants, inc.

PLOT.CEL

ms consultants, inc.
msconsultants.com

www.msconsultants.com

Ohio DOT Workspace
70\71 East Interchange 2E

0 0.5" 1"

Batchplot Spec: \\msconsultants.com\files\production\03\60\06634_2E\standards\plotdir\batchplt.spc
Pen Table: \\msconsultants.com\files\Standards\ustn\ohdot\V8i\ms\plotting\pen\V8i_ms_std.tbl
Plot Driver: \\msconsultants.com\files\Standards\ustn\ohdot\v8i\ms\plotting\PDF.pltcfg

PDF: ohdot\V8i
PCF: 60-06634_2E_Columbus

34" x 22"

Model: Sheet
Printed: 9/28/2018 @ 10:10:01 AM
File: N:\03\60\06634_2E\mot\sheets\105229MP3016.dgn

View: FENCE_VIEW1
By: kryan

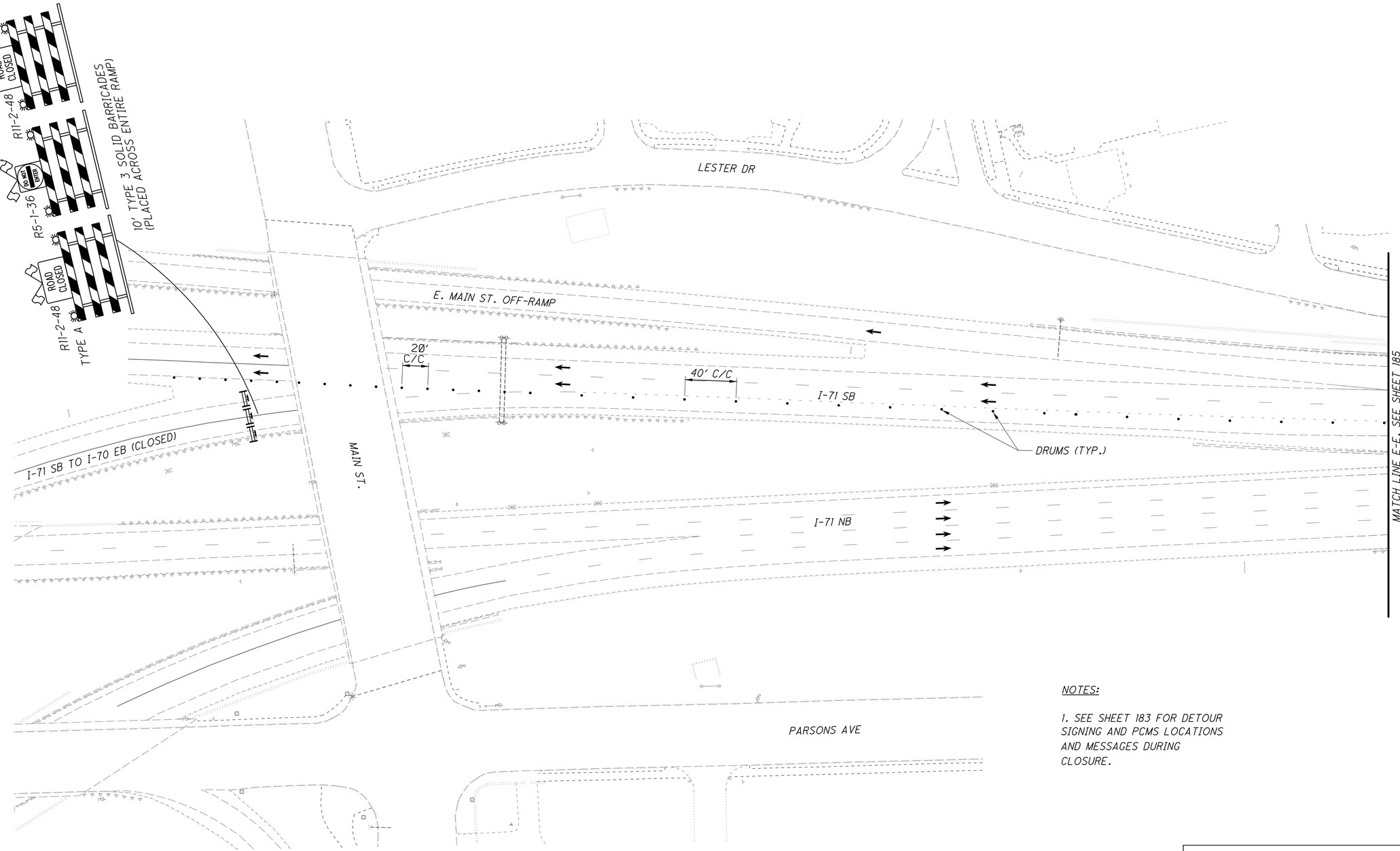

NOTES:

1. SEE SHEET 183 FOR DETOUR SIGNING AND PCMS LOCATIONS AND MESSAGES DURING CLOSURE.

SHEET LEGEND

- TEMPORARY PAVEMENT PLACED PRIOR TO THIS PHASE
- TEMPORARY PAVEMENT PLACED DURING THIS PHASE
- WORK AREA

FOR COMPLETE LEGEND AND DRUM SPACING CHART, SEE SHEET 194

HORIZONTAL SCALE IN FEET
0 20 40 80

CALCULATED JAH
CHECKED JML

MAINTENANCE OF TRAFFIC

TYPICAL DETAILS- I-71 SB TO I-70 EB CLOSURE

FRA-70-14.54

ms consultants, inc.

PLOT.CEL

ms consultants, inc.
msconsultants.com

www.msconsultants.com

Ohio DOT Workspace
70\71 East Interchange 2E

0 1" 0.5"

Batchplot Spec: \\msconsultants.com\files\production\03\60\06634_2E\standards\plotdir\batchplt.spc
Pen Table: \\msconsultants.com\files\Standards\ustn\ohdot\V8i\ms\plotting\pen\V8i_ms_std.tbl
Plot Driver: \\msconsultants.com\files\Standards\ustn\ohdot\v8i\ms\plotting\PDF.pltcfg

PDF: ohdot\V8i
DGN: 60-06634_2E_Columbus

Model: Sheet
Printed: 9/28/2018 @ 10:10:03 AM
File: N:\03\60\06634_2E\mot\sheets\105229MP-3017.dgn

View: FENCE_VIEW1
By: kryan

34" x 22"

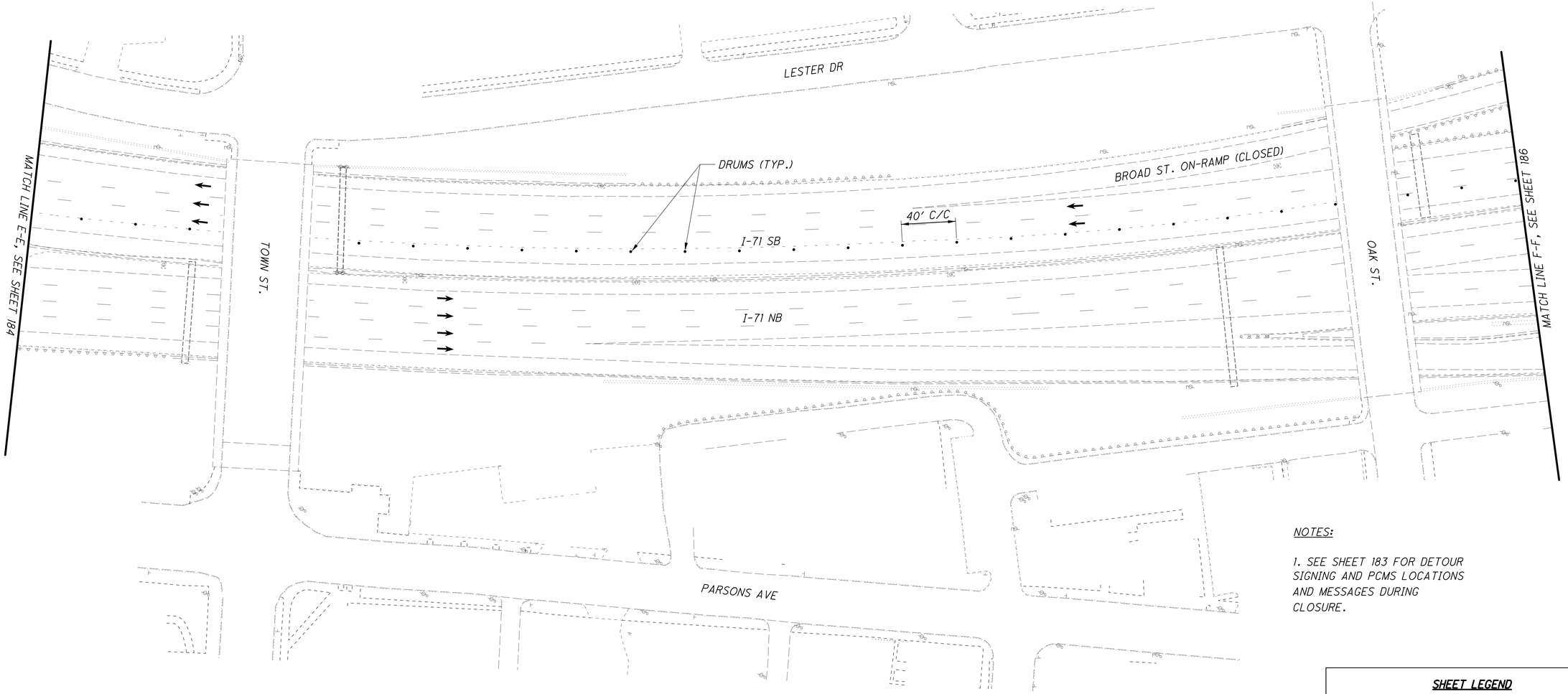

NOTES:

1. SEE SHEET 183 FOR DETOUR SIGNING AND PCMS LOCATIONS AND MESSAGES DURING CLOSURE.

SHEET LEGEND

- TEMPORARY PAVEMENT PLACED PRIOR TO THIS PHASE
- TEMPORARY PAVEMENT PLACED DURING THIS PHASE
- WORK AREA

FOR COMPLETE LEGEND AND DRUM SPACING CHART, SEE SHEET 156

N

0 20 40 80
HORIZONTAL SCALE IN FEET

CALCULATED JAH
CHECKED JML

MAINTENANCE OF TRAFFIC
TYPICAL DETAILS- I-71 SB TO I-70 EB CLOSURE

FRA-70-14.54

185
2317

PLOT.CEL

ms consultants, inc.
msconsultants.com

Batchplot Spec: \\msconsultants.com\Files\production\03\60\06634_2E\standards\plotdr\batchplt.spc
Pen Table: \\msconsultants.com\Files\Standards\ustn\ohdot\V8i\ms\plotting\pen\V8i_ms_std.tbl
Plot Driver: \\msconsultants.com\Files\Standards\ustn\ohdot\v8i\ms\plotting\PDF.pltcfg
PDF: ohdot\V8i
PCF: 60-06634_2E_Columbus
Ohio DOT Workspace
70\71 East Interchange 2E
www.msconsultants.com

0 1" 0.5"

34" x 22"

Model: Sheet
Printed: 9/28/2018 @ 10:10:06 AM
File: N:\03\60\06634_2E\mot\sheets\105220PI022.dgn
View: FENCE_VIEW1
By: kryan

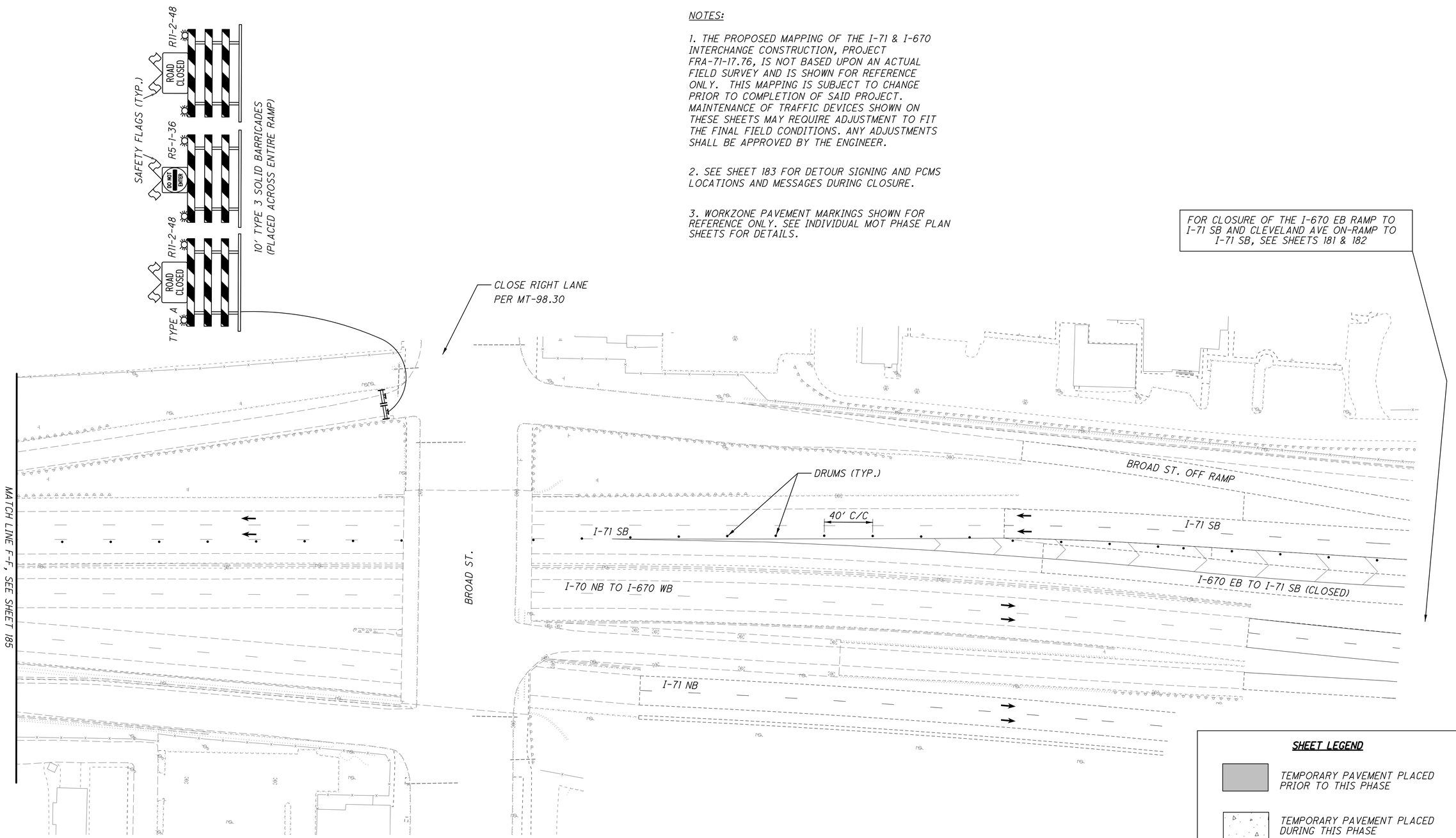

NOTES:

1. THE PROPOSED MAPPING OF THE I-71 & I-670 INTERCHANGE CONSTRUCTION, PROJECT FRA-71-17.76, IS NOT BASED UPON AN ACTUAL FIELD SURVEY AND IS SHOWN FOR REFERENCE ONLY. THIS MAPPING IS SUBJECT TO CHANGE PRIOR TO COMPLETION OF SAID PROJECT. MAINTENANCE OF TRAFFIC DEVICES SHOWN ON THESE SHEETS MAY REQUIRE ADJUSTMENT TO FIT THE FINAL FIELD CONDITIONS. ANY ADJUSTMENTS SHALL BE APPROVED BY THE ENGINEER.

2. SEE SHEET 183 FOR DETOUR SIGNING AND PCMS LOCATIONS AND MESSAGES DURING CLOSURE.

3. WORKZONE PAVEMENT MARKINGS SHOWN FOR REFERENCE ONLY. SEE INDIVIDUAL MOT PHASE PLAN SHEETS FOR DETAILS.

FOR CLOSURE OF THE I-670 EB RAMP TO I-71 SB AND CLEVELAND AVE ON-RAMP TO I-71 SB, SEE SHEETS 181 & 182

SHEET LEGEND

- TEMPORARY PAVEMENT PLACED PRIOR TO THIS PHASE
- TEMPORARY PAVEMENT PLACED DURING THIS PHASE
- WORK AREA

FOR COMPLETE LEGEND AND DRUM SPACING CHART, SEE SHEET 156

N

0 20 40 80 HORIZONTAL SCALE IN FEET

CALCULATED JAH
CHECKED JML

MAINTENANCE OF TRAFFIC
TYPICAL DETAILS- I-71 SB TO I-70 EB CLOSURE

FRA-70-14.54

ms consultants, inc.

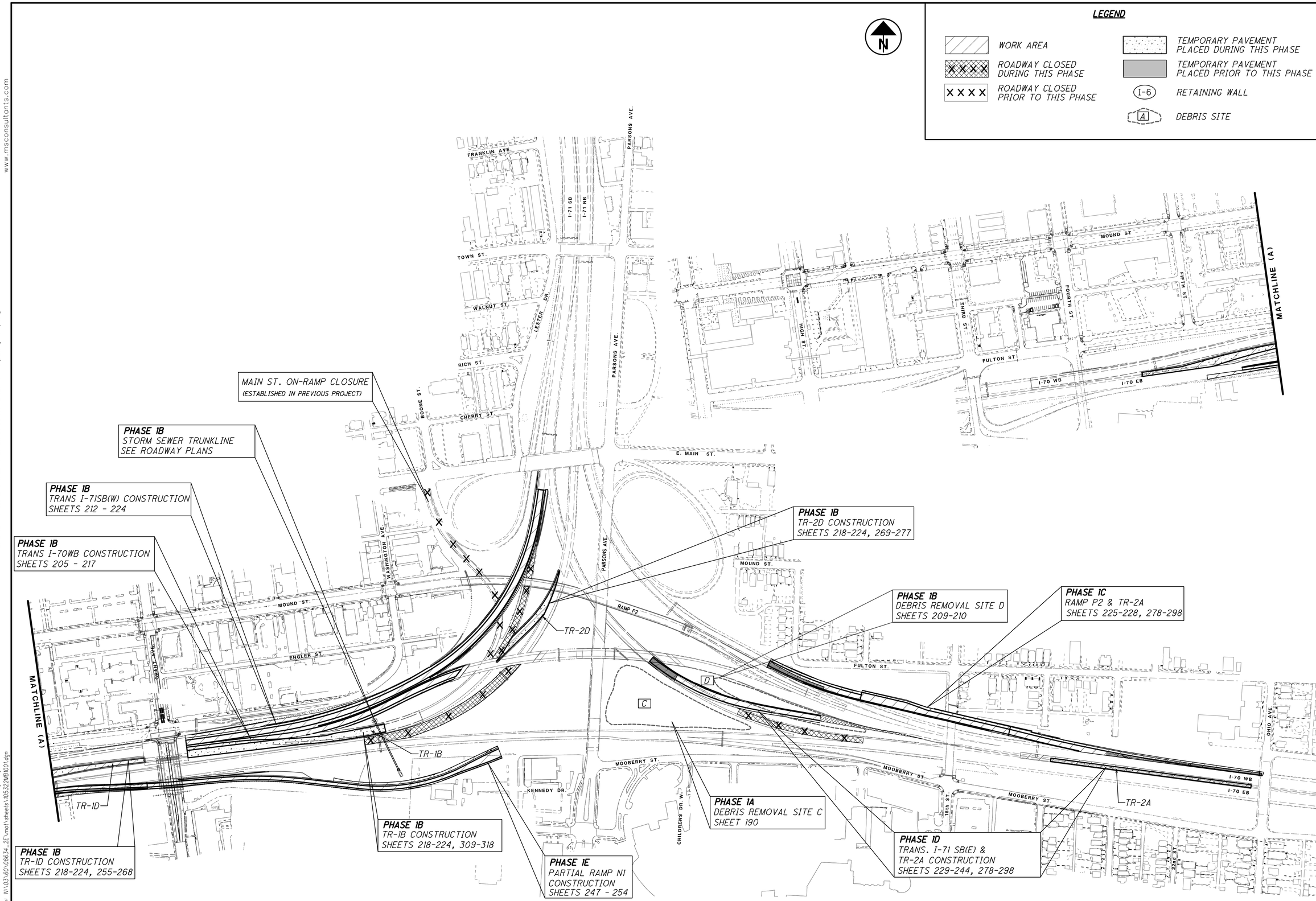

CALCULATED JAH
CHECKED JML

MAINTENANCE OF TRAFFIC - PHASE 1 SCHEMATIC

FRA-70-14.54

PLOT.CEL
ms consultants, inc.
msconsultants.com
Ohio DOT Workspace
70\71 East Interchange 2E
www.msconsultants.com
Batchplot Spec: \\msconsultants.com\files\production\03\60\06634_2E\standards\plotdrv\batchplt.spc
Pen Table: \\msconsultants.com\files\Standards\ustn\ohdot\V8i\ms\plotting\pen\V8i_ms_std.tbl
Plot Driver: \\msconsultants.com\files\Standards\ustn\ohdot\v8i\ms\plotting\PDF.pltcfg
Model: Sheet
Printed: 9/28/2018 @ 10:10:10 AM
File: N:\03\60\06634_2E\mot\sheets\105322MB1001.dgn
View: FENCE_VIEW1
By: kryan
34" x 22"
ms consultants, inc.

PLOT.CEL
ms consultants, inc.
msconsultants.com
www.msconsultants.com
Ohio DOT Workspace
70\71 East Interchange 2E
1"
0
0.5"
PDF: ohdot\V8i
PLOT: 60-06634_2E_Columbus
Batchplot Spec: \\msconsultants.com\files\production\03\60\06634_2E\standards\plotdrv\batchplt.SPC
Pen Table: \\msconsultants.com\files\Standards\astm\ohdot\V8\ms\plotting\pen\V8i_ms_std.tbl
Plot Driver: \\msconsultants.com\files\Standards\astm\ohdot\v8i\ms\plotting\PDF.pltcfg
Model: Sheet
Printed: 1/9/2019 @ 4:13:56 PM
File: \\msconsultants.com\files\Production\03\60\06634_2E\mot\sheets\105322MN1001.dgn
View: SHEET
By: dhall
34" x 22"

NO WORK REQUIRING LANE CLOSURES OR SHIFTS ON I-70 WESTBOUND SHALL OCCUR UNTIL MAY 30, 2019.

PRE-PHASE SEQUENCE OF CONSTRUCTION

TEMPORARY ITS FIBER CABLE ROUTING:

1) LANE CLOSURES DURING OFF-PEAK HOURS WILL BE REQUIRED ON CITY STREETS ALONG THE EXISTING CTSS CONDUIT PATHWAY TO PULL CABLE BETWEEN THE NODE CABINET AND THE 2ND/MOUND RAMP METER AS SHOWN IN THE TEMPORARY ITS PLAN. CLOSE LANES ON CITY STREETS PER CITY OF COLUMBUS STANDARD CONSTRUCTION DRAWINGS 1500, 1510, 1520, 1530, 1540 AND/OR 1550.

2) CLOSE THE LEFT LANE OF I-70 WB PER THE PERMITTED LANE CLOSURE CHART AND ODOT STANDARD CONSTRUCTION DRAWING MT-95.30 TO PULL FIBER OPTIC CABLE THROUGH THE EXISTING MEDIAN JUNCTION BOXES AS SHOWN ON THE TEMPORARY ITS PLAN.

PHASE 1 SEQUENCE OF CONSTRUCTION

PHASE 1A (SHEETS 190 - 198)

1) BEGIN DEBRIS REMOVAL OF SITE C. REMOVAL WORK FROM THIS SITE IS PERMITTED TO EXTEND INTO MULTIPLE PHASES BUT SHALL BE COMPLETED PRIOR TO BEGINNING WORK IN PHASE 2B.

2) COMPLETE MEDIAN AND SHOULDER FOUNDATION WORK ALONG I-70.

PHASE 1B (SHEETS 205 - 224)

STEP 1

1) BEGIN DEBRIS REMOVAL OF SITE D. REMOVAL WORK FROM THIS SITE IS PERMITTED TO EXTEND INTO MULTIPLE PHASES BUT SHALL BE COMPLETED PRIOR TO BEGINNING WORK IN PHASE 1D.

2) CONSTRUCT THE PERMANENT STORM SEWER TRUNK LINE NEAR I-70 STA. 778+00 VIA JACKING AND BORING PER THE ROADWAY PLANS DRAINAGE DETAILS (SEE SHEETS 594, 624, AND 1257F).

3) CONSTRUCT PAVEMENT FOR MAINTAINING TRAFFIC ALONG I-71 SB TO I-70 WB RAMP USING SINGLE LANE CLOSURES.

4) CONSTRUCT PARTIAL TRANS I-70 WB (W). MAINTAIN ONE LANE OF TRAFFIC ON EXISTING I-70 WB AND TWO LANES ON EXISTING I-71 SB TO I-70 WB RAMP.

STEP 2

1) CONSTRUCT PARTIAL TRANS I-71 SB (W) AND THE REMAINDER OF TRANS I-70 WB (W). MAINTAIN ONE LANE OF TRAFFIC ON THE COMPLETED PORTION OF TRANS I-70 WB AND TWO LANES ON EXISTING I-71 SB TO I-70 WB RAMP USING THE TEMPORARY PAVEMENT PLACED IN THE PREVIOUS STEP.

STEP 3

1) CONSTRUCT TR-1D, TR-1B, TR-2D AND THE REMAINDER OF TRANS I-70 WB (W). MAINTAIN ONE LANE OF TRAFFIC ON THE COMPLETED PORTION OF TRANS I-70 WB AND TWO LANES ON THE COMPLETED PORTION OF TRANS I-71 SB (W). MAINTAIN ALL EXISTING EASTBOUND LANES ON THE EXISTING EASTBOUND PAVEMENT.

PHASE 1C (SHEETS 225 - 228A)

1) CONSTRUCT RAMP P2 AND PARTIAL TR-2A. MAINTAIN THE EXISTING NUMBER OF EB LANES ON EXISTING PAVEMENT.

2) CONSTRUCT PAVEMENT FOR MAINTAINING TRAFFIC ON EXISTING I-71 SB TO I-70 EB RAMP USING SINGLE LANE CLOSURES.

PHASE 1D (SHEETS 229 - 244)

STEP 1

1) CONSTRUCT PARTIAL TRANS I-71 SB (E) AND THE REMAINDER OF TR-2A. MAINTAIN TWO LANES ON THE EXISTING I-71 SB TO I-70 EB RAMP USING THE TEMPORARY PAVEMENT PLACED IN THE PREVIOUS PHASE. SHIFT TWO LANES OF WB TO NB TRAFFIC ONTO RAMP P2.

2) CONSTRUCT PAVEMENT FOR MAINTAINING TRAFFIC NEAR THE MOUND ST. EXIT GORE AREA TO CONNECT TRANS I-71 SB (E) TO I-70 WB.

STEP 2

1) SWITCH I-70 EB TRAFFIC OVER TO THE I-70 WB LANES USING TR-1D, THE EXISTING I-70 WB BRIDGE AND TR-2A.

2) CONTINUE CONSTRUCTION OF TRANS I-70 SB (E). MAINTAIN ONE LANE OF TRAFFIC ON THE EXISTING I-71 SB TO I-70 EB RAMP USING THE TEMPORARY PAVEMENT PLACED IN THE PREVIOUS PHASE AND MAINTAIN ONE LANE ON THE PORTION OF TRANS I-71 SB (E) AND TEMPORARY PAVEMENT CONSTRUCTED IN THE PREVIOUS STEP.

STEP 3

1) COMPLETE CONSTRUCTION OF TRANS I-70 SB (E). MAINTAIN TWO LANES OF TRAFFIC ON THE PORTION OF TRANS I-71 SB (E) AND TEMPORARY PAVEMENT CONSTRUCTED IN THE PREVIOUS STEPS.

PHASE 1E (SHEETS 247 - 254)

1) SWITCH I-70 EB TO I-70 NB TRAFFIC ONTO TR-2D.

2) CONSTRUCT PARTIAL RAMP N1. MAINTAIN THE THIRD ST. ON-RAMP AND THE 18TH ST. EXIT DURING CONSTRUCTION.

CALCULATED JAH
CHECKED JML

PHASE 1 - SEQUENCE OF CONSTRUCTION

FRA-70-14.54

ms consultants, inc.

PLOT.CEL

ms consultants, inc.
msconsultants.com

www.msconsultants.com

Ohio DOT Workspace
70\71 East Interchange 2E

0 0.5" 1"

Batchplot Spec: \\msconsultants.com\files\production\03\60\06634_2E\standards\plotdrv\batchplt.SPC
Pen Table: \\msconsultants.com\files\Standards\astm\ohdot\V8i\ms\plotting\pen\V8i_ms_std.tbl PLOT: ohdotV8i
Plot Driver: \\msconsultants.com\files\Standards\astm\ohdot\v8i\ms\plotting\PDF.pltcfg PLOT: 60-06634_2E_Columbus

Model: Sheet
Printed: 1/10/2019 @ 4:17:53 PM View: SHEET
File: \\msconsultants.com\files\Production\03\60\06634_2E\mnol\sheets\105322NN002.dgn By: dhall

34" x 22"

PHASE 1 SUMMARY

CONSTRUCTION CRITICAL TO NEXT PHASE

ROADWAY REMOVAL

- E. MAIN STREET TO I-70 WB ENTRANCE RAMP
- STORM SEWER TRUNKLINE

DEBRIS REMOVAL
- SITE C AND SITE D

TEMPORARY ROADWAY CONSTRUCTION
- WEST SIDE
- TR-1D: TEMP I-70 EB
- TR-2D: TEMP I-70 EB TO I-71 NB
- TR-1B: TEMP I-71 SB TO I-70 WB

- EAST SIDE
- TR-2A: TEMP I-70 EB/WB CONNECTION

PERMANENT RETAINING WALL CONSTRUCTION
- WALL I-9A-1 BETWEEN RAMP N3 AND RAMP N1

PERMANENT ROADWAY CONSTRUCTION
- TRANS I-70 WB (W)
- TRANS I-71 SB (W)
- TRANS I-71 SB (E)
- TRANS I-71 NB (E)
- RAMP P2
- TRANS RAMP P2
- RAMP N1 FROM STATION 870+00 TO STATION 885+00

CONSTRUCTION AVAILABLE THIS PHASE

CHILDREN'S HOSPITAL ACCESS DURING THIS PHASE
- GRANT AVENUE BRIDGE OPEN
- PARSONS AVENUE OPEN
- 18TH STREET BRIDGE OPEN
- 18TH STREET EASTBOUND EXIT RAMP OPEN
- I-71 SB EXIT RAMP TO MAIN STREET

NOTE: SEE SHEET 111 FOR DISINCENTIVE AMOUNTS ASSOCIATED WITH ANY MAINLINE ROADWAY OR SYSTEM RAMP OVERNIGHT CLOSURE REQUIRED IN THIS PHASE.

PROPOSED ROADWAY DESCRIPTIONS	
ROAD NAME	**DESCRIPTION (DIRECTION OF STATIONING)**
RAMP Q1	I-71 SB TO I-70 WB
RAMP Q3	I-71 SB TO I-70 EB
RAMP N4	I-70 EB TO I-71 NB
RAMP P4	I-70 WB TO I-71 NB
RAMP P5	I-70 WB TO I-670
RAMP N1	I-70 EB TO PARSONS AVE
RAMP N2	FULTON ST EB (BY WAY OF RAMP N3) TO I-71 NB
RAMP N3	FULTON ST EB TO I-70 EB
RAMP P1	I-70 WB (BY WAY OF RAMP P2) TO PARSONS AVE
RAMP P2	I-70 WB TO MOUND ST WB
RAMP P6	MAIN ST TO I-71 NB/I-670

TEMPORARY ROADWAY DESCRIPTIONS	
PLAN VIEW LABEL	**DESCRIPTION**
TR-1B	TEMP I-70 EB TO I-71 NB
TR-1D	TEMP I-70 EB
TR-2A	TEMP I-70 EB/WB CONNECTION
TR-2D	TEMP I-70 EB TO I-71 NB
TR-2F	TEMP I-70 EB EXIT TO 18TH ST
TR-2G	TEMP MOOBERRY ST CONNECTION

CALCULATED JAH
CHECKED JML

PHASE 1 - SUMMARY & DISINCENTIVE CHART

FRA-70-14.54

189
2317

PLOT.CEL

ms consultants, inc.
msconsultants.com

www.msconsultants.com

Ohio DOT Workspace
70\71 East Interchange 2E

Batchplot Spec: \\msconsultants.com\Files\Production\03\60\06634_2E\standards\plotdrv\batchplt.spc
Pen Table: \\msconsultants.com\Files\Standards\usth\ohdot\V8i\ms\plotting\pen\V8i_ms_std.tbl
Plot Driver: \\msconsultants.com\Files\Standards\usth\ohdot\v8i\ms\plotting\PDF.pltcfg
PLOT: ohdot V8i
PCF: 60-06634_2E_Columbus

Model: Sheet
Printed: 9/28/2018 @ 10:10:25 AM
File: N:\03\60\06634_2E\mot\sheets\105229MP0005.dgn
View: FENCE_VIEW1
By: kryan

34" x 22"

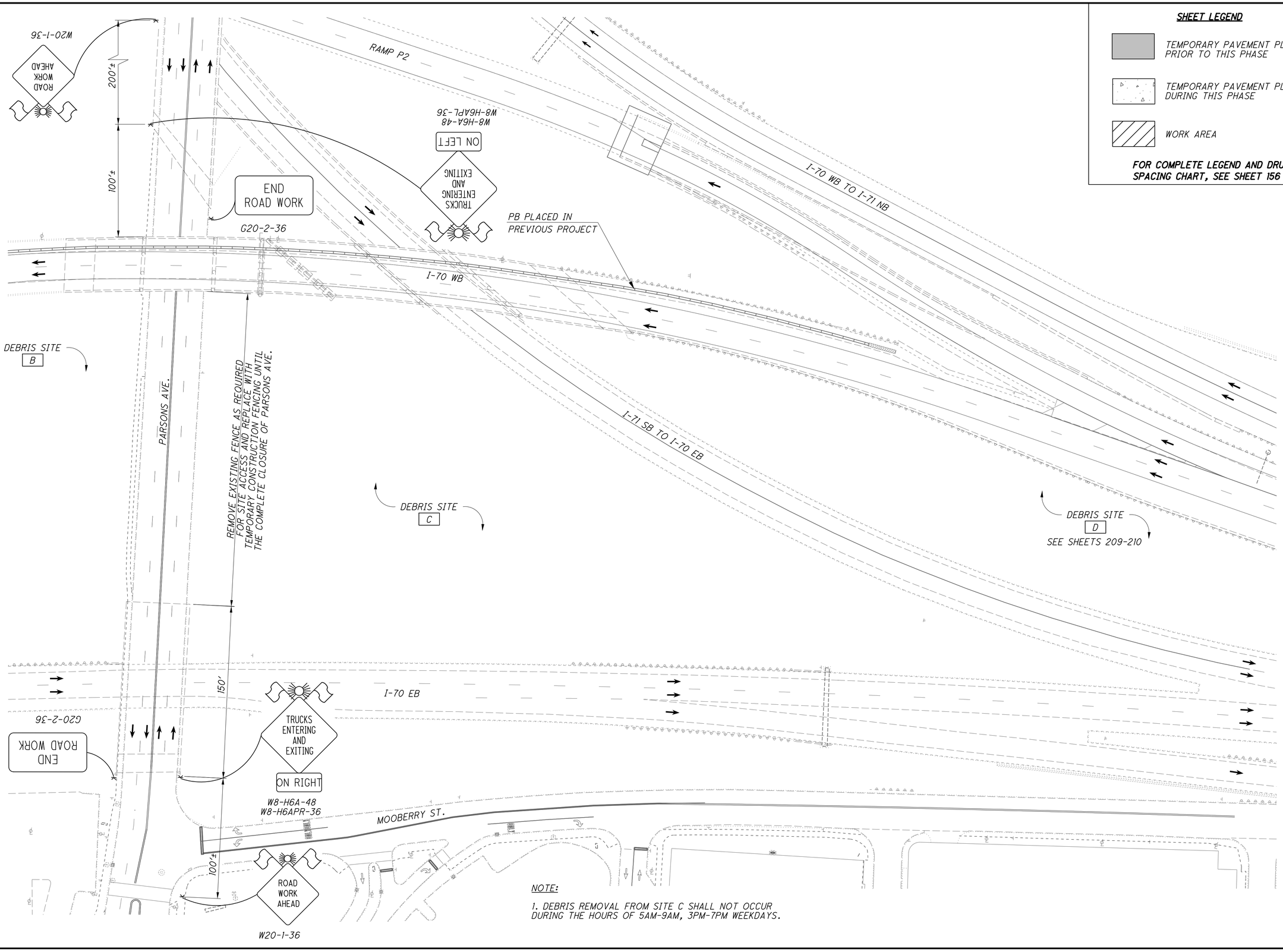

SHEET LEGEND

- TEMPORARY PAVEMENT PLACED PRIOR TO THIS PHASE
- TEMPORARY PAVEMENT PLACED DURING THIS PHASE
- WORK AREA

FOR COMPLETE LEGEND AND DRUM SPACING CHART, SEE SHEET 156

HORIZONTAL SCALE IN FEET
0 20 40 80

CALCULATED JAH
CHECKED JML

MAINTENANCE OF TRAFFIC - PHASE 1A
CONTRACTOR ACCESS-DEBRIS REMOVAL SITE C

FRA-70-14.54

190
2317

NOTE:

1. DEBRIS REMOVAL FROM SITE C SHALL NOT OCCUR DURING THE HOURS OF 5AM-9AM, 3PM-7PM WEEKDAYS.

PLOT.CEL

ms consultants, inc.
msconsultants.com

Ohio DOT Workspace
70\71 East Interchange 2E

www.msconsultants.com

Batchplot Spec: \\msconsultants.com\files\production\03\60\06634_2E\standards\plotdrv\batchplt.spc
Pen Table: \\msconsultants.com\files\Standards\usth\ohdot\V8i\ms\plotting\pen\V8i_ms_std.tbl
Plot Driver: \\msconsultants.com\files\Standards\usth\ohdot\v8i\ms\plotting\PDF.pltcfg

PDF: ohdot\V8i
DGN: 60-06634_2E_Columbus

0 1" 0.5"

34" x 22"

Model: Sheet
Printed: 9/20/2018 @ 10:10:28 AM
File: N:\03\60\06634_2E\mot\sheets\105322NP109.dgn

View: FENCE_VIEW1
By: kryan

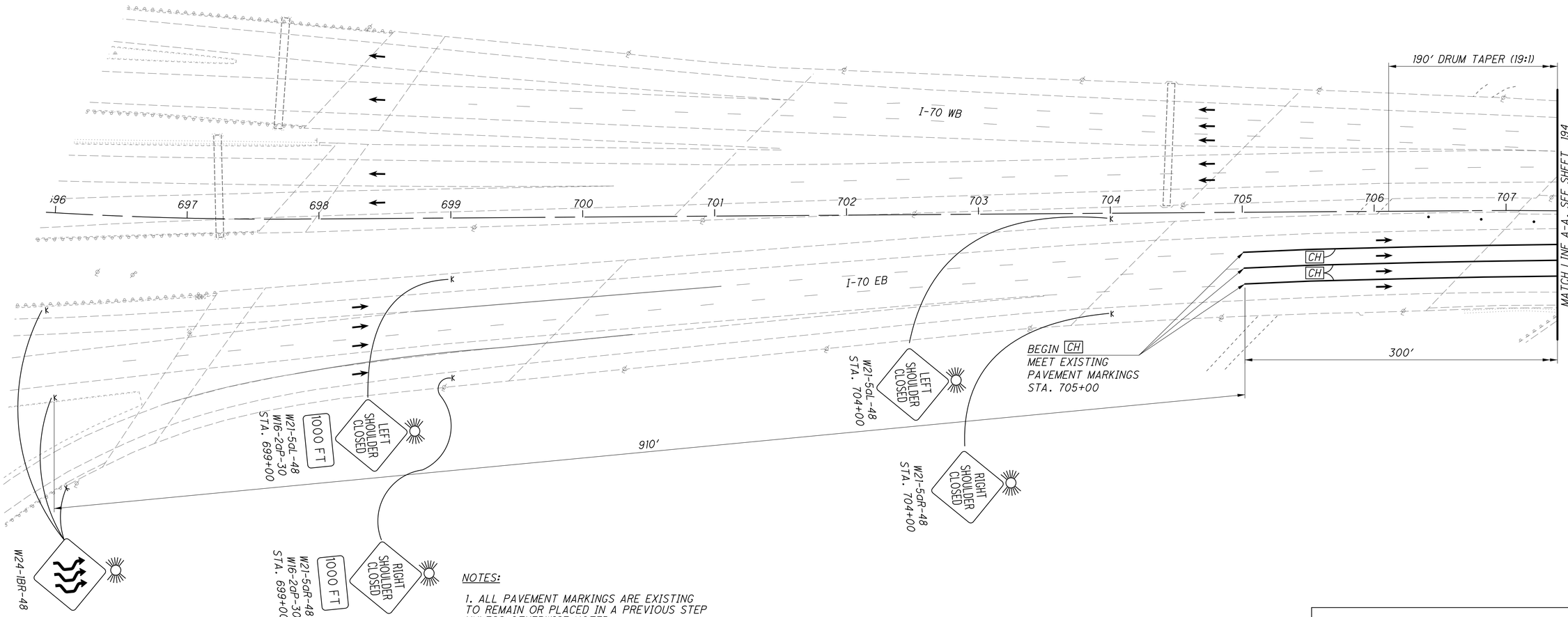

NOTES:

1. ALL PAVEMENT MARKINGS ARE EXISTING TO REMAIN OR PLACED IN A PREVIOUS STEP UNLESS OTHERWISE NOTED.

2. THE CONTRACTOR MAY CLOSE EXISTING I-70 EB/WB LANES, IF NECESSARY, AS PER THE UNAUTHORIZED LANE USE TABLE ON SHEET 111 OR AS APPROVED BY THE ENGINEER.

3. ADJUST SIGN LOCATIONS AS SHOWN ON SHEET 140 DURING WORK DONE IN THIS PHASE.

SHEET LEGEND

- TEMPORARY PAVEMENT PLACED PRIOR TO THIS PHASE
- TEMPORARY PAVEMENT PLACED DURING THIS PHASE
- WORK AREA

FOR COMPLETE LEGEND AND DRUM SPACING CHART, SEE SHEET 156

0 20 40 80
HORIZONTAL SCALE IN FEET

CALCULATED JAH
CHECKED JML

MAINTENANCE OF TRAFFIC - PHASE 1A
MEDIAN/SHOULDER FOUNDATION WORK

FRA-70-14.54

ms consultants, inc.

PLOT.CEL

ms consultants, inc.
msconsultants.com

www.msconsultants.com

Ohio DOT Workspace
70\71 East Interchange 2E

Batchplot Spec: \\msconsultants.com\Files\production\03\60\06634_2E\standards\plotdrv\batchplt.spc PCF: ohdot\V8i
Pen Table: \\msconsultants.com\Files\Standards\ustn\ohdot\V8i\ms\plotting\pen\V8i_ms_std.tbl PCF: 60-06634_2E_Columbus
Plot Driver: \\msconsultants.com\Files\Standards\ustn\ohdot\v8i\ms\plotting\PDF.pltcfg

Model: Sheet @ 10:10:30 AM View: FENCE_VIEW1
Printed: 9/28/2018 By: kryan
File: N:\03\60\06634_2E\mot\sheets\105229MP1040.dgn

34" x 22"

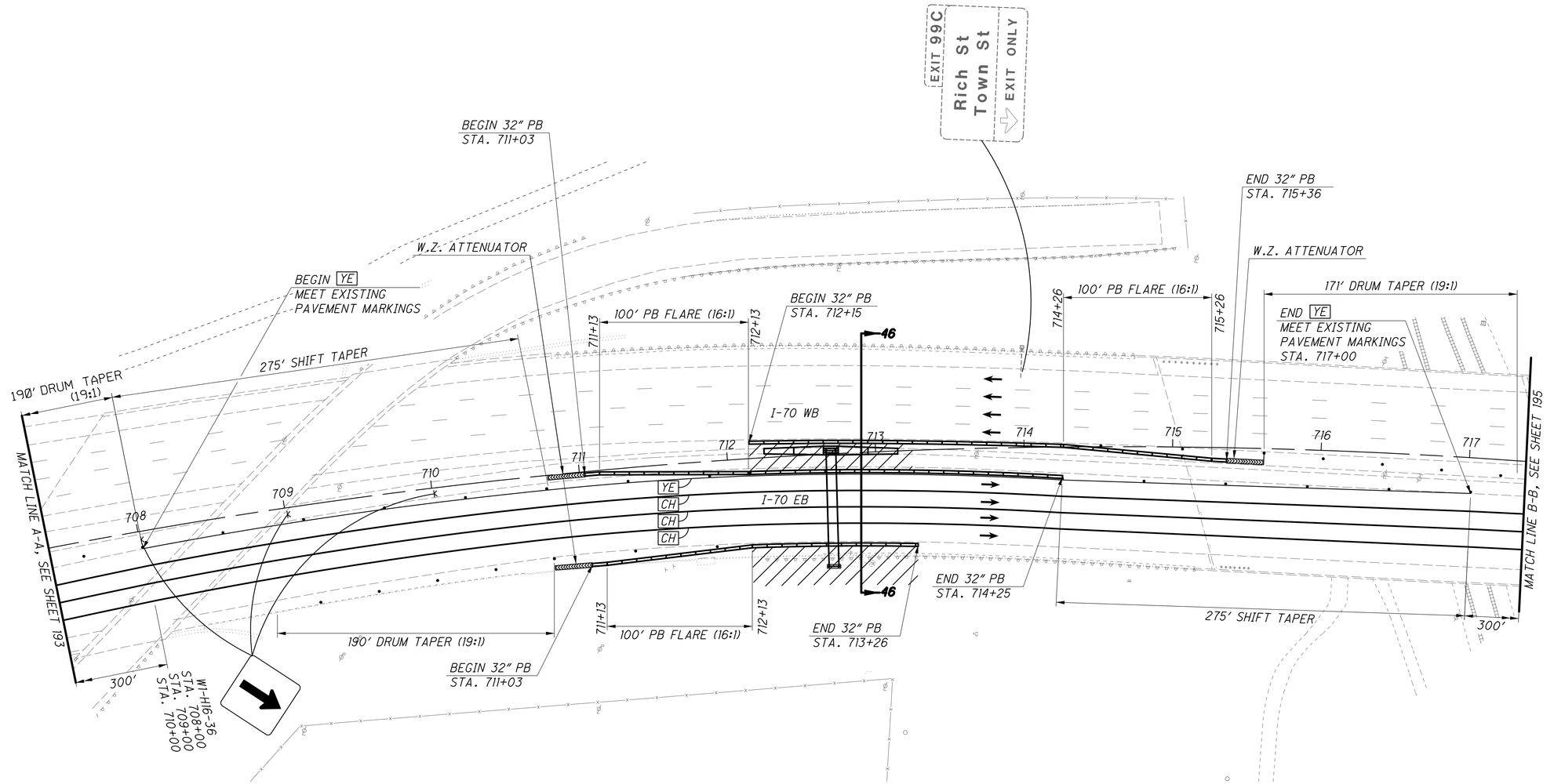

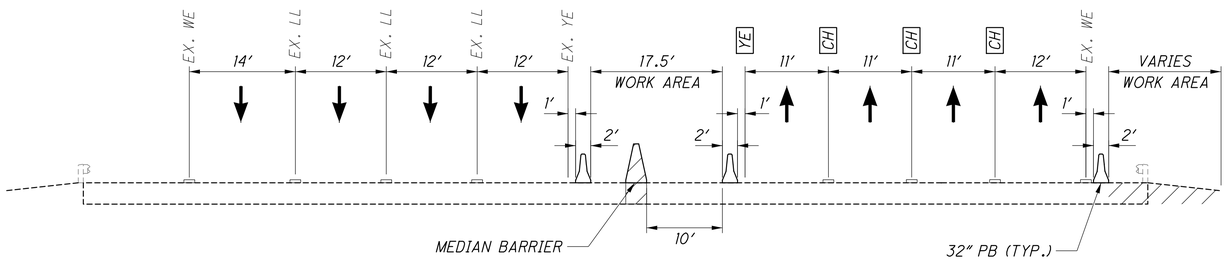

TYPICAL SECTION 46-46
NOT TO SCALE

NOTES:

1. ALL PAVEMENT MARKINGS ARE EXISTING TO REMAIN OR PLACED IN A PREVIOUS STEP UNLESS OTHERWISE NOTED.

2. THE CONTRACTOR MAY CLOSE EXISTING I-70 EB/WB LANES, IF NECESSARY, AS PER THE UNAUTHORIZED LANE USE TABLE ON SHEET 111 OR AS APPROVED BY THE ENGINEER.

SHEET LEGEND

- TEMPORARY PAVEMENT PLACED PRIOR TO THIS PHASE
- TEMPORARY PAVEMENT PLACED DURING THIS PHASE
- WORK AREA

FOR COMPLETE LEGEND AND DRUM SPACING CHART, SEE SHEET 156

N

0 20 40 80
HORIZONTAL SCALE IN FEET

CALCULATED JAH
CHECKED JML

MAINTENANCE OF TRAFFIC - PHASE 1A
MEDIAN / SHOULDER FOUNDATION WORK

FRA-70-14.54

ms consultants, inc.

PLOT.CEL

ms consultants, inc.
msconsultants.com

Batchplot Spec: \\msconsultants.com\files\production\03\60\06634_2E\standards\plotdrv\batchplt.spc
Pen Table: \\msconsultants.com\files\Standards\usth\ohdot\V8i\ms\plotting\pen\V8i_ms_std.tbl
Plot Driver: \\msconsultants.com\files\Standards\usth\ohdot\V8i\ms\plotting\PDF.pltcfg

Ohio DOT Workspace
70\71 East Interchange 2E
PCF: ohdotV8i
PCF: 60-06634_2E_Columbus

www.msconsultants.com

0 1" 0.5"

Model: Sheet
Printed: 9/28/2018 @ 10:10:33 AM
File: N:\03\60\06634_2E\mot\sheets\105228MP1098.dgn
View: FENCE_VIEW1
By: kryan

34" x 22"

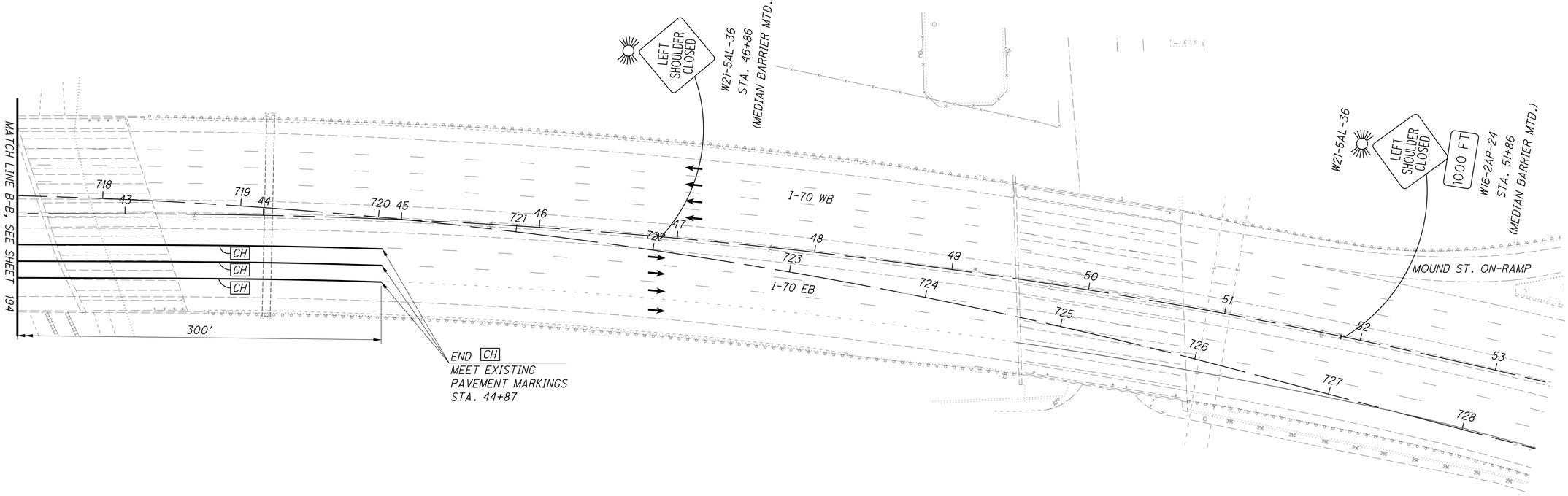

NOTES:

1. ALL PAVEMENT MARKINGS ARE EXISTING TO REMAIN OR PLACED IN A PREVIOUS STEP UNLESS OTHERWISE NOTED.

2. THE CONTRACTOR MAY CLOSE EXISTING I-70 EB/WB LANES, IF NECESSARY, AS PER THE UNAUTHORIZED LANE USE TABLE ON SHEET 111 OR AS APPROVED BY THE ENGINEER.

SHEET LEGEND

- TEMPORARY PAVEMENT PLACED PRIOR TO THIS PHASE
- TEMPORARY PAVEMENT PLACED DURING THIS PHASE
- WORK AREA

FOR COMPLETE LEGEND AND DRUM SPACING CHART, SEE SHEET 156

N

0 20 40 80 HORIZONTAL SCALE IN FEET

CALCULATED JAH
CHECKED JML

MAINTENANCE OF TRAFFIC - PHASE 1A
MEDIAN/SHOULDER FOUNDATION WORK

FRA-70-14.54

195
2317

PLOT.CEL

ms consultants, inc.
msconsultants.com

Ohio DOT Workspace
70\71 East Interchange 2E

www.msconsultants.com

0 0.5" 1"

Batchplot Spec: \\msconsultants.com\files\production\03\60\06634_2E\standards\plotdr\batchplt.spc
Pen Table: \\msconsultants.com\files\Standards\ustn\ohdot\V8i\ms\plotting\pen\V8i_ms_std.tbl PDF: ohdot\V8i
Plot Driver: \\msconsultants.com\files\Standards\ustn\ohdot\V8i\ms\plotting\PDF 60-06634_2E_Columbus

Model: Sheet @ 10:10:36 AM View: FENCE_VIEW1
Printed: 9/28/2018 By: kryan
File: N:\03\60\06634_2E\mot\sheets\105220MP1099.dgn

34" x 22"

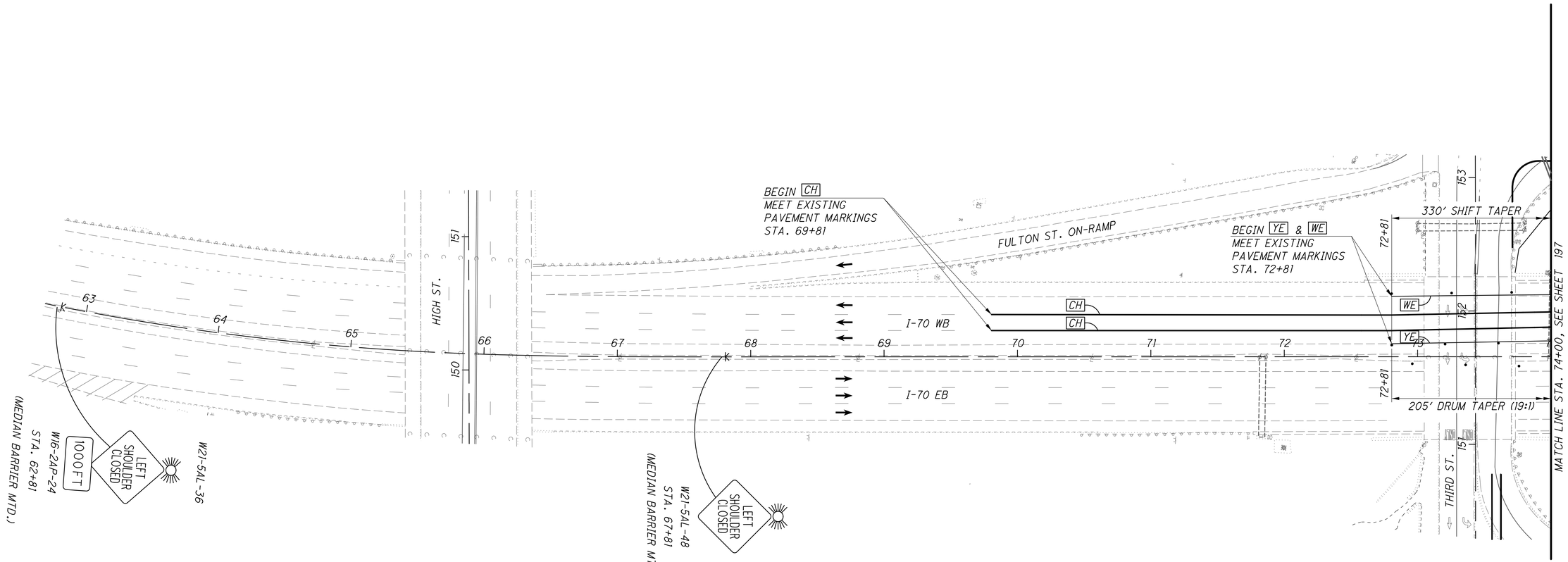

NOTES:

1. ALL PAVEMENT MARKINGS ARE EXISTING TO REMAIN OR PLACED IN A PREVIOUS STEP UNLESS OTHERWISE NOTED.

2. THE CONTRACTOR MAY CLOSE EXISTING I-70 EB/WB LANES, IF NECESSARY, AS PER THE UNAUTHORIZED LANE USE TABLE ON SHEET 111 OR AS APPROVED BY THE ENGINEER.

SHEET LEGEND

- TEMPORARY PAVEMENT PLACED PRIOR TO THIS PHASE
- TEMPORARY PAVEMENT PLACED DURING THIS PHASE
- WORK AREA

FOR COMPLETE LEGEND AND DRUM SPACING CHART, SEE SHEET 156

0 20 40 80 HORIZONTAL SCALE IN FEET

CALCULATED JAH
CHECKED JML

MAINTENANCE OF TRAFFIC - PHASE 1A
MEDIAN / SHOULDER FOUNDATION WORK

FRA-70-14.54

196
2317

ms consultants, inc.

PLOT.CEL

ms consultants, inc.
msconsultants.com

www.msconsultants.com

Ohio DOT Workspace
70\71 East Interchange 2E

Batchplot Spec: \\msconsultants.com\files\production\03\60\06634_2E\standards\plotdrv\batchplt.spc PCF: ohdot1V8i
Pen Table: \\msconsultants.com\files\Standards\usth\ohdot\V8i\ms\plotting\pen\V8i_ms_std.tbl PCF: 60-06634_2E_Columbus
Plot Driver: \\msconsultants.com\files\Standards\usth\ohdot\V8i\ms\plotting\PDF.pltcfg

Model: Sheet View: FENCE_VIEW1
Printed: 9/28/2018 @ 10:10:39 AM By: kryan
File: N:\03\60\06634_2E\mot\sheets\105222MPT041.dgn

34" x 22"

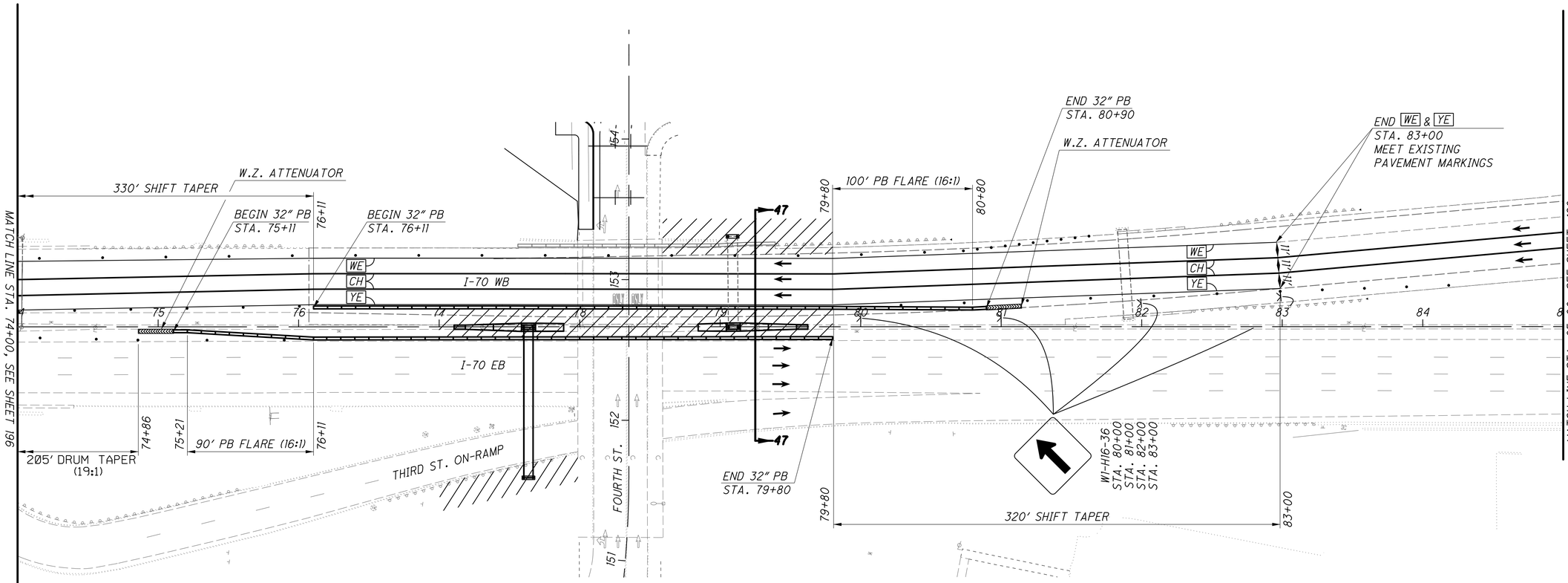

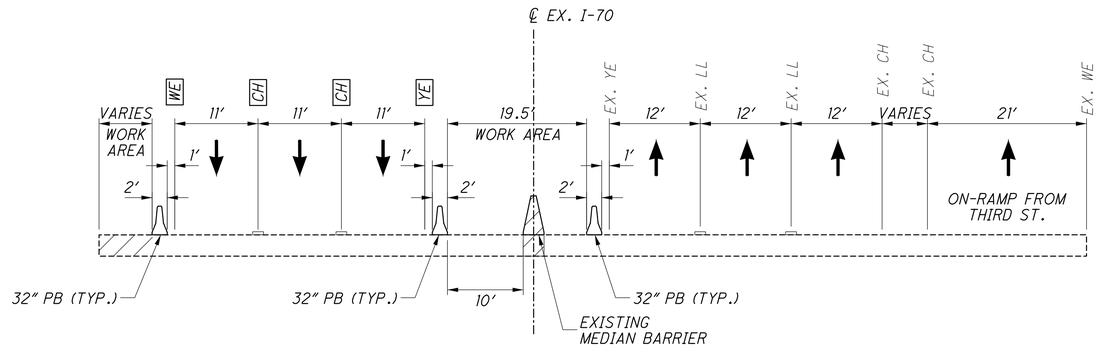

TYPICAL SECTION 47-47
NOT TO SCALE

NOTES:

1. ALL PAVEMENT MARKINGS ARE EXISTING TO REMAIN OR PLACED IN A PREVIOUS STEP UNLESS OTHERWISE NOTED.

2. THE CONTRACTOR MAY CLOSE EXISTING I-70 EB/WB LANES, IF NECESSARY, AS PER THE UNAUTHORIZED LANE USE TABLE ON SHEET 111 OR AS APPROVED BY THE ENGINEER.

SHEET LEGEND

- TEMPORARY PAVEMENT PLACED PRIOR TO THIS PHASE
- TEMPORARY PAVEMENT PLACED DURING THIS PHASE
- WORK AREA

FOR COMPLETE LEGEND AND DRUM SPACING CHART, SEE SHEET 156

HORIZONTAL SCALE IN FEET
0 20 40 80

CALCULATED JAH
CHECKED JML

MAINTENANCE OF TRAFFIC - PHASE 1A
MEDIAN/SHOULDER FOUNDATION WORK

FRA-70-14.54

197
2317

ms consultants, inc.

PLOT.CEL

ms consultants, inc.
msconsultants.com

Batchplot Spec: \\vnsconsultants.com\files\production\03\60\06634_2E\standards\plotdrv\batchplt.spc
Pen Table: \\vnsconsultants.com\files\Standards\usth\ohdot\V8i\ms\plotting\pen\V8i_ms_std.tbl
Plot Driver: \\vnsconsultants.com\files\Standards\usth\ohdot\v8i\ms\plotting\PDF.pltcfg

PDF: ohdotV8i
DCF: 60-06634_2E_Columbus

Ohio DOT Workspace
70\71 East Interchange 2E

www.msconsultants.com

0 0.5" 1"

Model: Sheet
Printed: 9/28/2018 @ 10:10:41 AM
File: N:\03\60\06634_2E\mot\sheets\105322MEP114.dgn

View: FENCE_VIEW1
By: kryan

34" x 22"

END CH
STA. 86+00
MEET EXISTING
PAVEMENT MARKINGS

RIGHT SHOULDER CLOSED AHEAD
W21-5bR-48
STA. 88+00

LEFT SHOULDER CLOSED AHEAD
W21-5bL-48
STA. 88+00

RIGHT SHOULDER CLOSED
1000 FT
W21-5aR-48
W16-2aP-30
STA. 92+00

LEFT SHOULDER CLOSED
1000 FT
W21-5aL-48
W16-2aP-30
STA. 92+00

W1-4cL-48
STA. 93+70

CH
I-70 WB

MATCH LINE STA. 85+00, SEE SHEET 197

I-70 EB

GRAVEL AVE

156

155

86 87 88 89 90 91 92 93 94 95

NOTES:

1. ALL PAVEMENT MARKINGS ARE EXISTING TO REMAIN OR PLACED IN A PREVIOUS STEP UNLESS OTHERWISE NOTED.

2. THE CONTRACTOR MAY CLOSE EXISTING I-70 EB/WB LANES, IF NECESSARY, AS PER THE UNAUTHORIZED LANE USE TABLE ON SHEET 111 OR AS APPROVED BY THE ENGINEER.

SHEET LEGEND

TEMPORARY PAVEMENT PLACED PRIOR TO THIS PHASE

TEMPORARY PAVEMENT PLACED DURING THIS PHASE

WORK AREA

FOR COMPLETE LEGEND AND DRUM SPACING CHART, SEE SHEET 156

N

0 20 40 80
HORIZONTAL SCALE IN FEET

CALCULATED JAH
CHECKED JML

MAINTENANCE OF TRAFFIC - PHASE 1A
MEDIAN/SHOULDER FOUNDATION WORK

FRA-70-14.54

198
2317

PLOT.CEL

ms consultants, inc.
msconsultants.com

www.msconsultants.com

Ohio DOT Workspace
70\71 East Interchange 2E

0 0.5" 1"

Batchplot Spec: \\msconsultants.com\files\production\03\60\06634.2E\standards\plotdrv\batchplt.spc
Pen Table: \\msconsultants.com\files\production\03\60\06634.2E\standards\usth\ohdot\V8i\ms\plotting\pen\V8i_ms_std.tbl
Plot Driver: \\msconsultants.com\files\production\03\60\06634.2E\standards\usth\ohdot\V8i\ms\plotting\PDF.pltcfg

Model: Sheet
Printed: 9/28/2018 @ 10:10:45 AM
File: N:\03\60\06634.2E\mot\sheets\05322MP1031.dgn

View: FENCE_VIEW1
By: kryan

34" x 22"

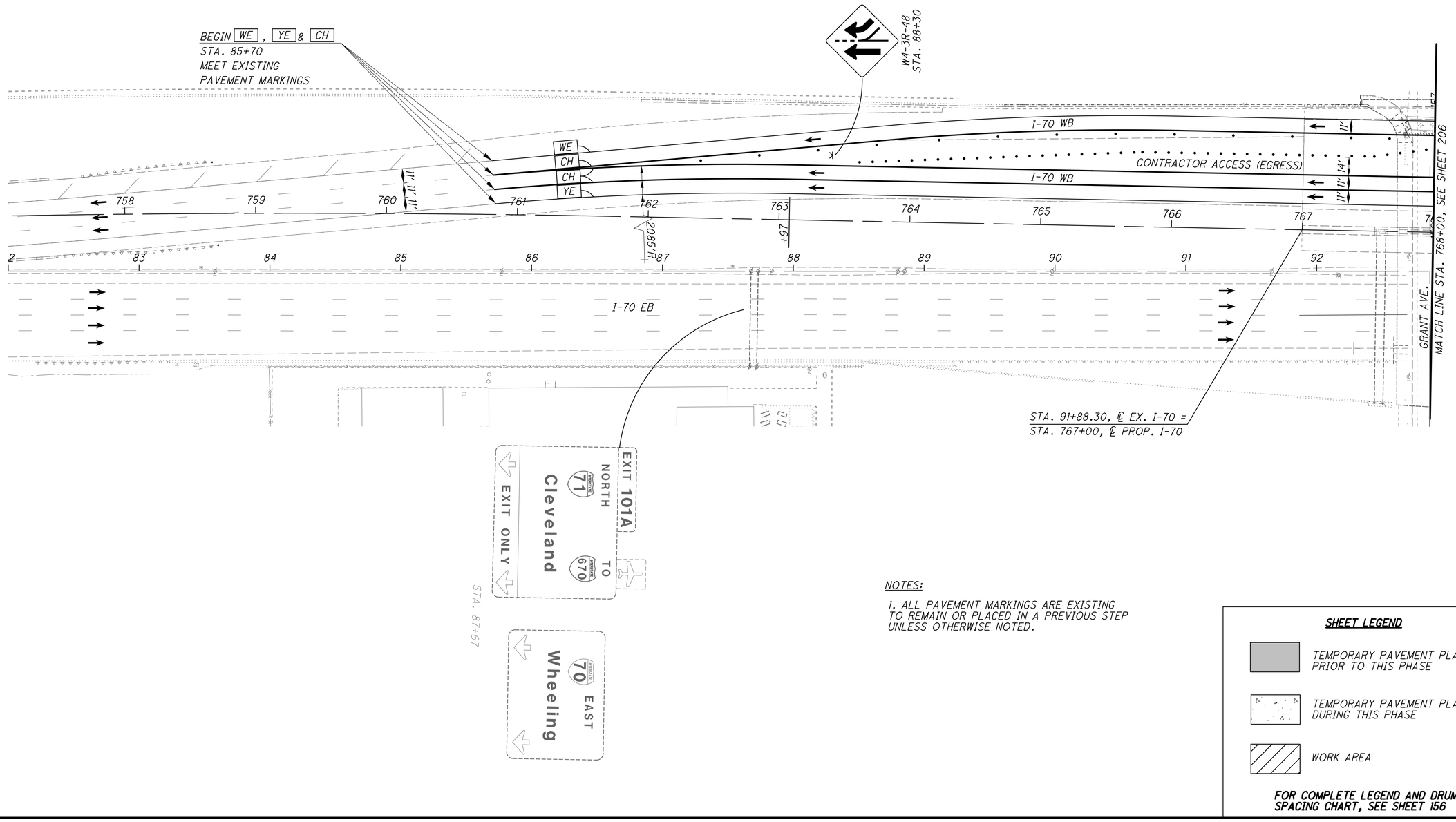

NOTES:

1. ALL PAVEMENT MARKINGS ARE EXISTING TO REMAIN OR PLACED IN A PREVIOUS STEP UNLESS OTHERWISE NOTED.

SHEET LEGEND

- TEMPORARY PAVEMENT PLACED PRIOR TO THIS PHASE
- TEMPORARY PAVEMENT PLACED DURING THIS PHASE
- WORK AREA

FOR COMPLETE LEGEND AND DRUM SPACING CHART, SEE SHEET 156

0 20 40 80
HORIZONTAL SCALE IN FEET

CALCULATED JAH
CHECKED JML

MAINTENANCE OF TRAFFIC - PHASE 1B, STEP 1
TRANS. I-70 WB

FRA-70-14.54

205
2317

PLOT.CEL
ms consultants, inc.
msconsultants.com
www.msconsultants.com
Ohio DOT Workspace
70\71 East Interchange 2E
PDF: ohdot\V8i
DGN: 60-06634_2E_Columbus
Batchplot Spec: \\msconsultants.com\files\production\03\60\06634_2E\standards\plotdr\batchplt.spc
Pen Table: \\msconsultants.com\files\Standards\ustn\ohdot\V8i\ms\plotting\pen\V8i_ms_std.tbl
Plot Driver: \\msconsultants.com\files\Standards\ustn\ohdot\v8i\ms\plotting\PDF.pltcfg
Model: Sheet
Printed: 1/8/2019 @ 2:25:46 PM
File: \\msconsultants.com\files\Production\03\60\06634_2E\mot\sheets\105322MP1032.dgn
View: FENCE_VIEW1
By: kryan
34" x 22"

NOTES:

1. ALL PAVEMENT MARKINGS ARE EXISTING TO REMAIN OR PLACED IN A PREVIOUS STEP UNLESS OTHERWISE NOTED.

2. THE CONTRACTOR SHALL EITHER COVER OR TEMPORARILY REMOVE SIGN UNTIL THE BEGINNING OF PHASE 5, STEP 1 WHERE IT SHALL BE UNCOVERED OR REINSTALLED.

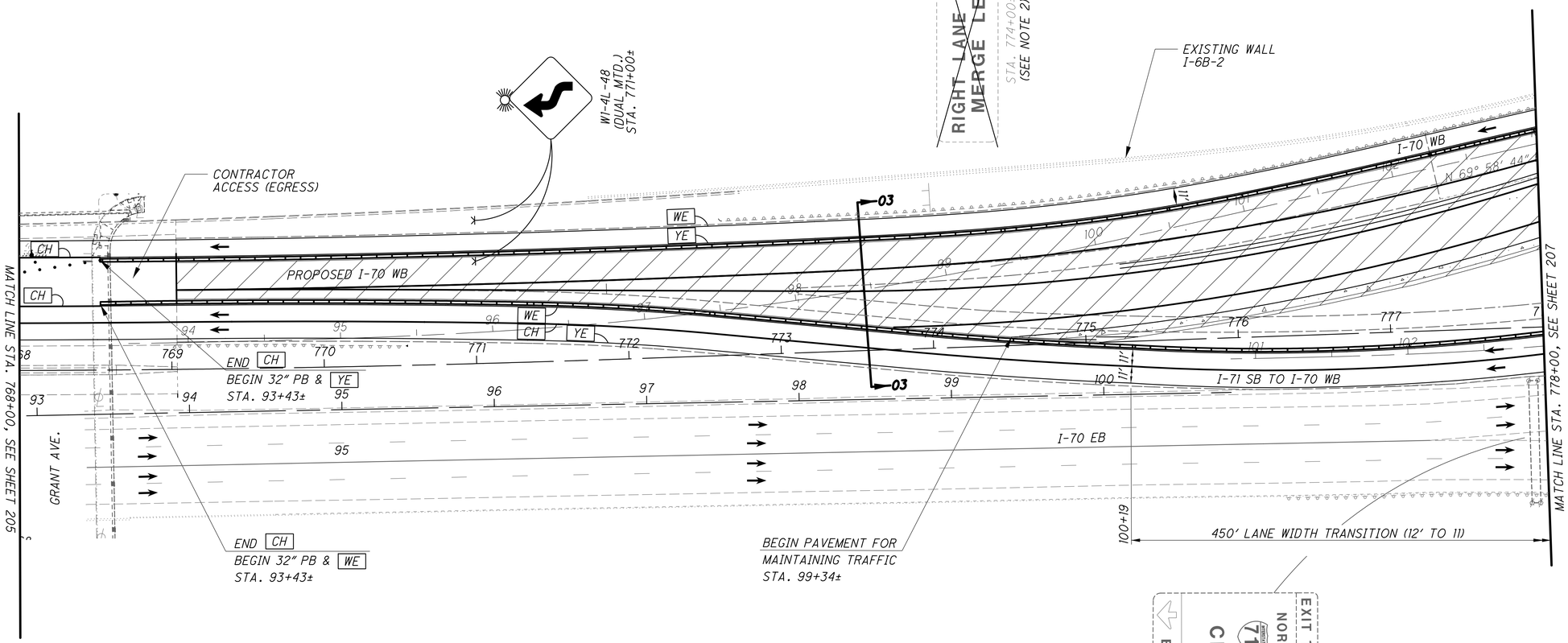

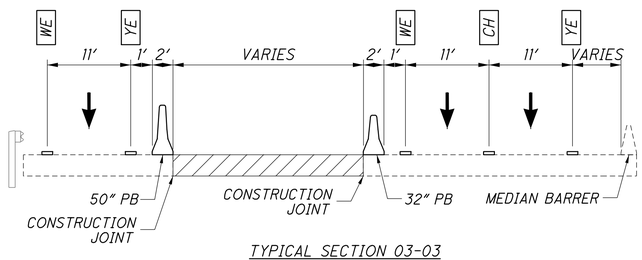

TYPICAL SECTION 03-03
NOT TO SCALE

SHEET LEGEND

- TEMPORARY PAVEMENT PLACED PRIOR TO THIS PHASE
- TEMPORARY PAVEMENT PLACED DURING THIS PHASE
- WORK AREA

FOR COMPLETE LEGEND AND DRUM SPACING CHART, SEE SHEET 156

HORIZONTAL SCALE IN FEET
0 20 40 80

CALCULATED JAH
CHECKED JML

MAINTENANCE OF TRAFFIC - PHASE 1B, STEP 1
TRANS.I-70 WB

FRA-70-14.54

206
2317

ms consultants, inc.

PLOT.CEL

ms consultants, inc.
msconsultants.com

www.msconsultants.com

Ohio DOT Workspace
70\71 East Interchange 2E

Batchplot Spec: \\msconsultants.com\files\production\03\60\06634_2E\standards\plotdrv\batchplt.spc
Pen Table: \\msconsultants.com\files\Standards\ustn\ohdot\V8i\ms\plotting\pen\V8i_ms_std.tbl
Plot Driver: \\msconsultants.com\files\Standards\ustn\ohdot\V8i\ms\plotting\PDF.pltcfg
PDF: ohdotV8i
DGNLIB: 60-06634_2E_Columbus

0 1" 0.5"

34" x 22"

Model: Sheet
Printed: 9/28/2018 @ 10:10:50 AM
File: N:\03\60\06634_2E\mot\sheets\105322MP103.dgn
View: FENCE_VIEW1
By: kryan

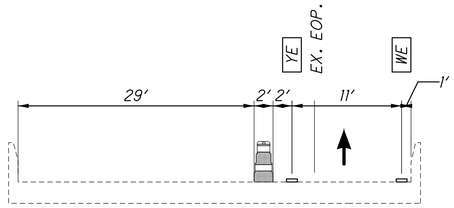

TYPICAL SECTION 56-56
NOT TO SCALE

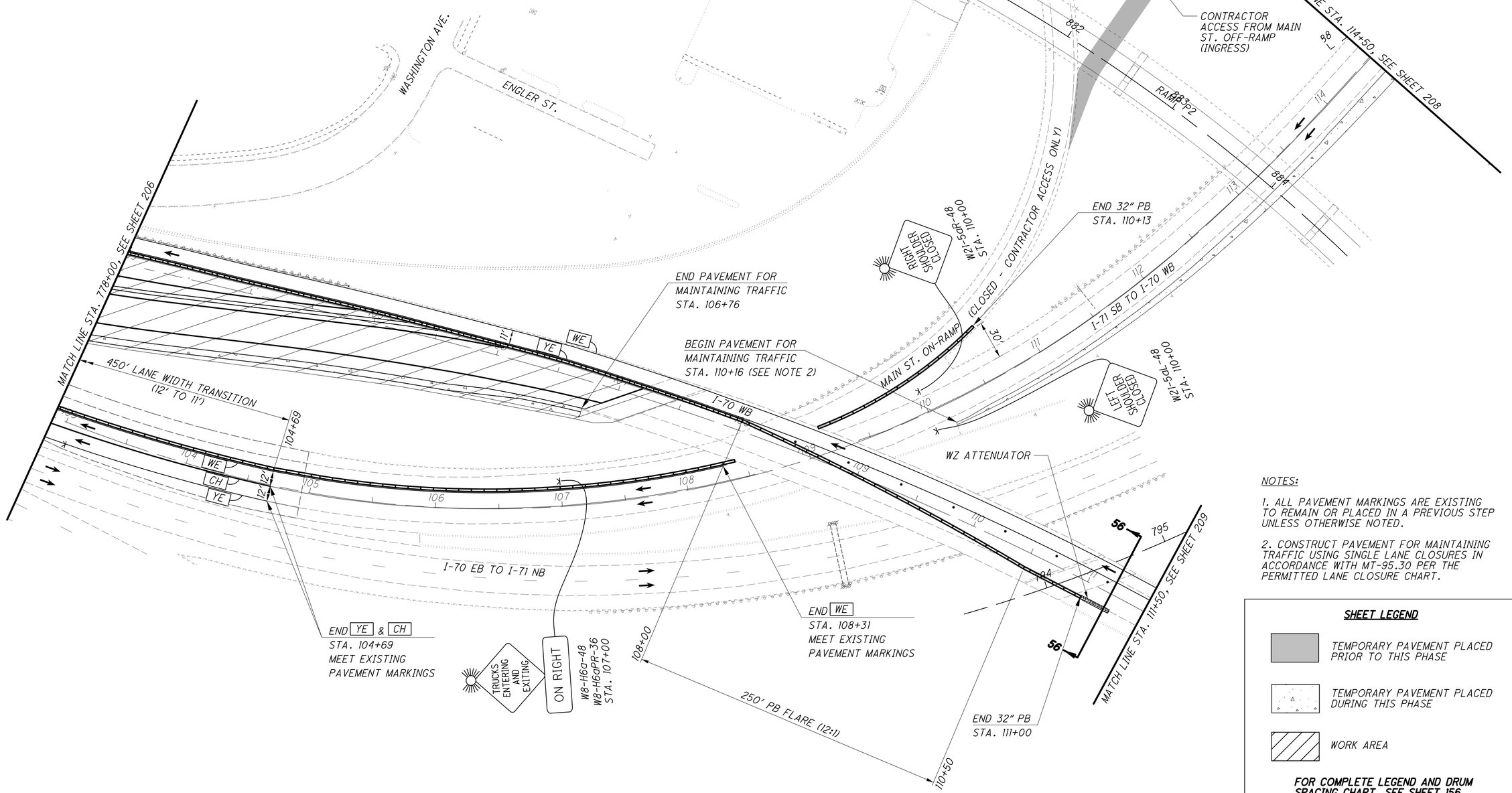

NOTES:

1. ALL PAVEMENT MARKINGS ARE EXISTING TO REMAIN OR PLACED IN A PREVIOUS STEP UNLESS OTHERWISE NOTED.

2. CONSTRUCT PAVEMENT FOR MAINTAINING TRAFFIC USING SINGLE LANE CLOSURES IN ACCORDANCE WITH MT-95.30 PER THE PERMITTED LANE CLOSURE CHART.

SHEET LEGEND

- TEMPORARY PAVEMENT PLACED PRIOR TO THIS PHASE
- TEMPORARY PAVEMENT PLACED DURING THIS PHASE
- WORK AREA

FOR COMPLETE LEGEND AND DRUM SPACING CHART, SEE SHEET 156

HORIZONTAL SCALE IN FEET
0 20 40 80

CALCULATED JAH
CHECKED JML

MAINTENANCE OF TRAFFIC - PHASE 1B, STEP 1
TRANS. I-70 WB

FRA-70-14.54

ms consultants, inc.

PLOT.CEL

ms consultants, inc.
msconsultants.com

www.msconsultants.com

Ohio DOT Workspace
70\71 East Interchange 2E

Batchplot Spec: \\msconsultants.com\files\production\03\60\06634_2E\standards\plotdr\batchplt.spc
Pen Table: \\msconsultants.com\files\Standards\ash\ohdot\V8i\ms\plotting\pen\V8i_ms_std.tbl
Plot Driver: \\msconsultants.com\files\Standards\ash\ohdot\V8i\ms\plotting\PDF.pltcfg

PDF: ohdotV8i
PCF: 60-06634_2E_Columbus

0 1" 0.5"

34" x 22"

Model: Sheet
Printed: 9/28/2018 @ 10:10:53 AM
File: N:\03\60\06634_2E\mot\sheets\105322MPI034.dgn
View: FENCE_VIEW1
By: kryan

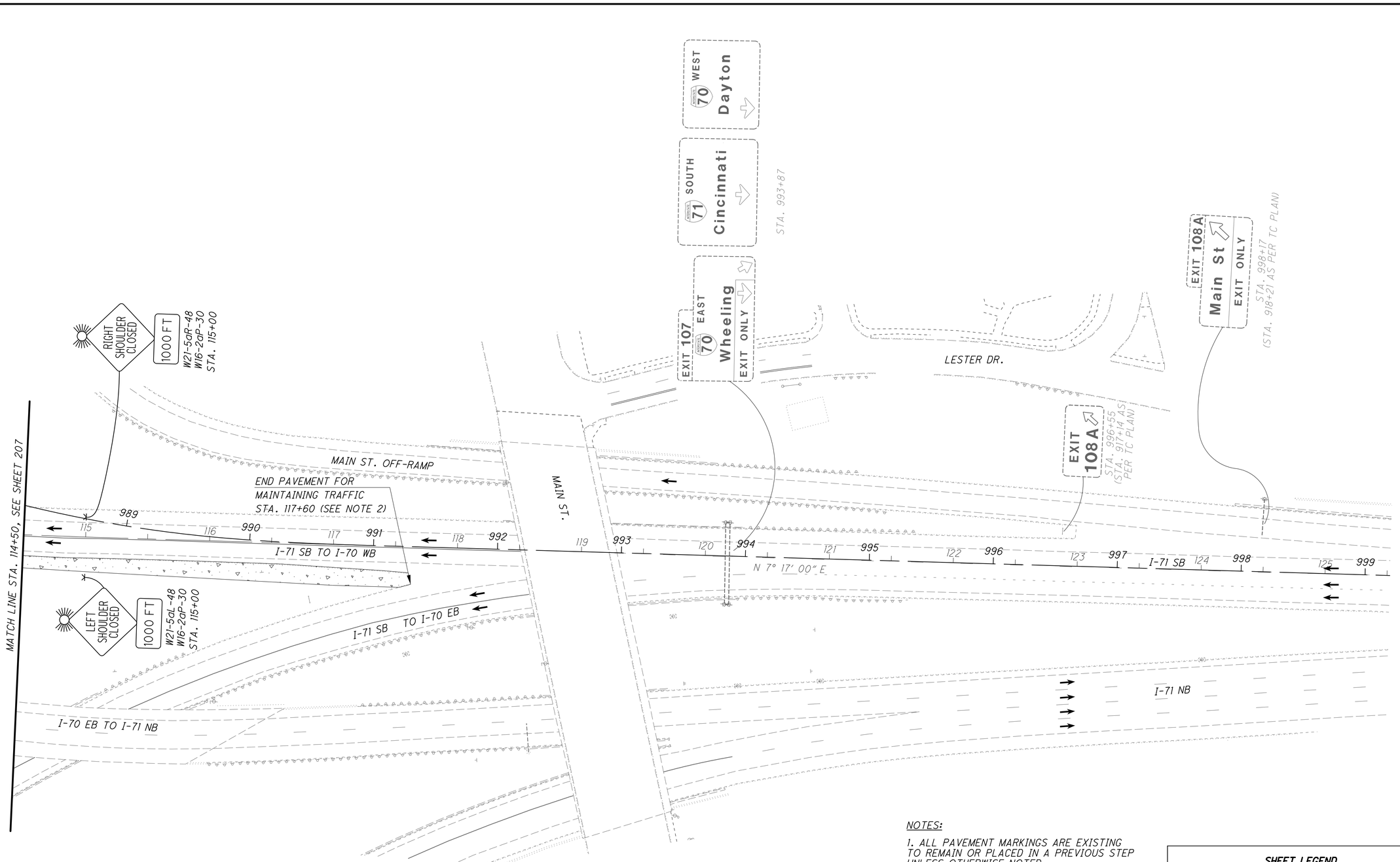

NOTES:

1. ALL PAVEMENT MARKINGS ARE EXISTING TO REMAIN OR PLACED IN A PREVIOUS STEP UNLESS OTHERWISE NOTED.

2. CONSTRUCT PAVEMENT FOR MAINTAINING TRAFFIC USING SINGLE LANE CLOSURES IN ACCORDANCE WITH MT-95.30 PER THE PERMITTED LANE CLOSURE CHART.

SHEET LEGEND

- TEMPORARY PAVEMENT PLACED PRIOR TO THIS PHASE
- TEMPORARY PAVEMENT PLACED DURING THIS PHASE
- WORK AREA

FOR COMPLETE LEGEND AND DRUM SPACING CHART, SEE SHEET 156

N

0 20 40 80 HORIZONTAL SCALE IN FEET

CALCULATED JAH
CHECKED JML

MAINTENANCE OF TRAFFIC - PHASE 1B, STEP 1
TRANS. I-70 WB

FRA-70-14.54

208
2317

ms consultants, inc.

PLOT.CEL

ms consultants, inc.
msconsultants.com

www.msconsultants.com

Ohio DOT Workspace
70\71 East Interchange 2E

0 0.5" 1"

Batchplot Spec: \\msconsultants.com\Files\Production\03\60\06634.2E\standards\plotdrv\batchplt.spc
Pen Table: \\msconsultants.com\Files\Standards\ustn\ohdot\V8i\ms\plotting\pen\V8i_ms_std.tbl
Plot Driver: \\msconsultants.com\Files\Standards\ustn\ohdot\V8i\ms\plotting\PDF.pltcfg
PDF: ohdot\V8i
DGN: 60-06634_2E_Columbus

34" x 22"

View: FENCE_VIEW1
By: kryan
Model: Sheet @ 10:10:56 AM
Printed: 9/28/2018
File: N:\03\60\06634_2E\mot sheets\105322MP1120.dgn

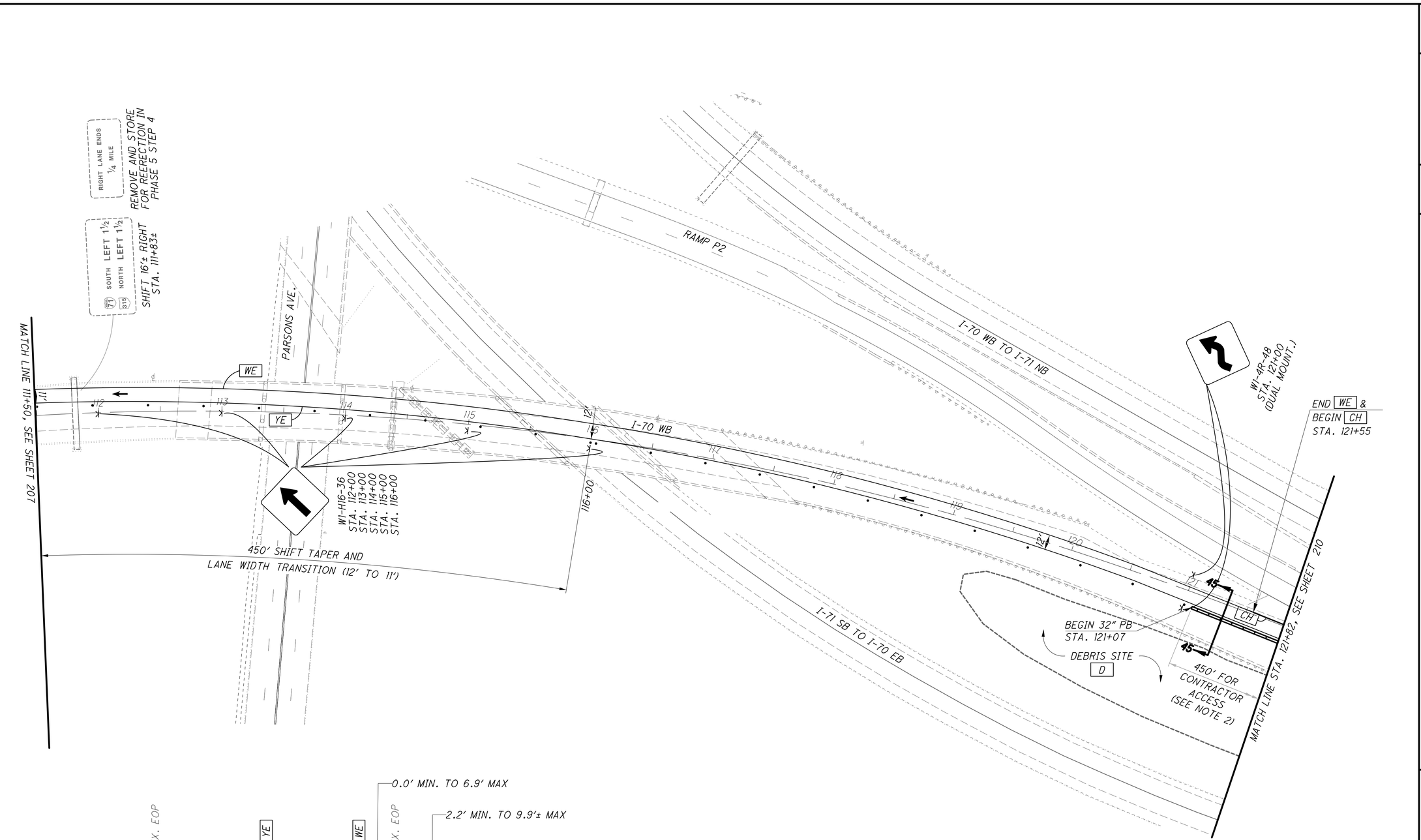

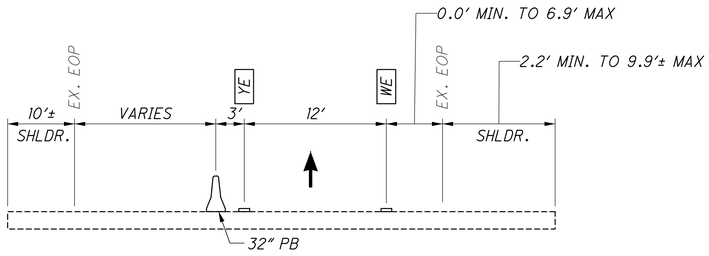

TYPICAL SECTION 45-45
NOT TO SCALE

NOTES:

1. ALL PAVEMENT MARKINGS ARE EXISTING TO REMAIN OR PLACED IN A PREVIOUS STEP UNLESS OTHERWISE NOTED.

2. SEE SHEET 210 FOR ADDITIONAL CONTRACTOR ACCESS DETAILS.

SHEET LEGEND

- TEMPORARY PAVEMENT PLACED PRIOR TO THIS PHASE
- TEMPORARY PAVEMENT PLACED DURING THIS PHASE
- WORK AREA

FOR COMPLETE LEGEND AND DRUM SPACING CHART, SEE SHEET 156

HORIZONTAL SCALE IN FEET
0 20 40 80

CALCULATED JAH
CHECKED JML

MAINTENANCE OF TRAFFIC - PHASE 1B, STEP 1
TRANS. I-70 WB

FRA-70-14.54

209
2317

ms consultants, inc.

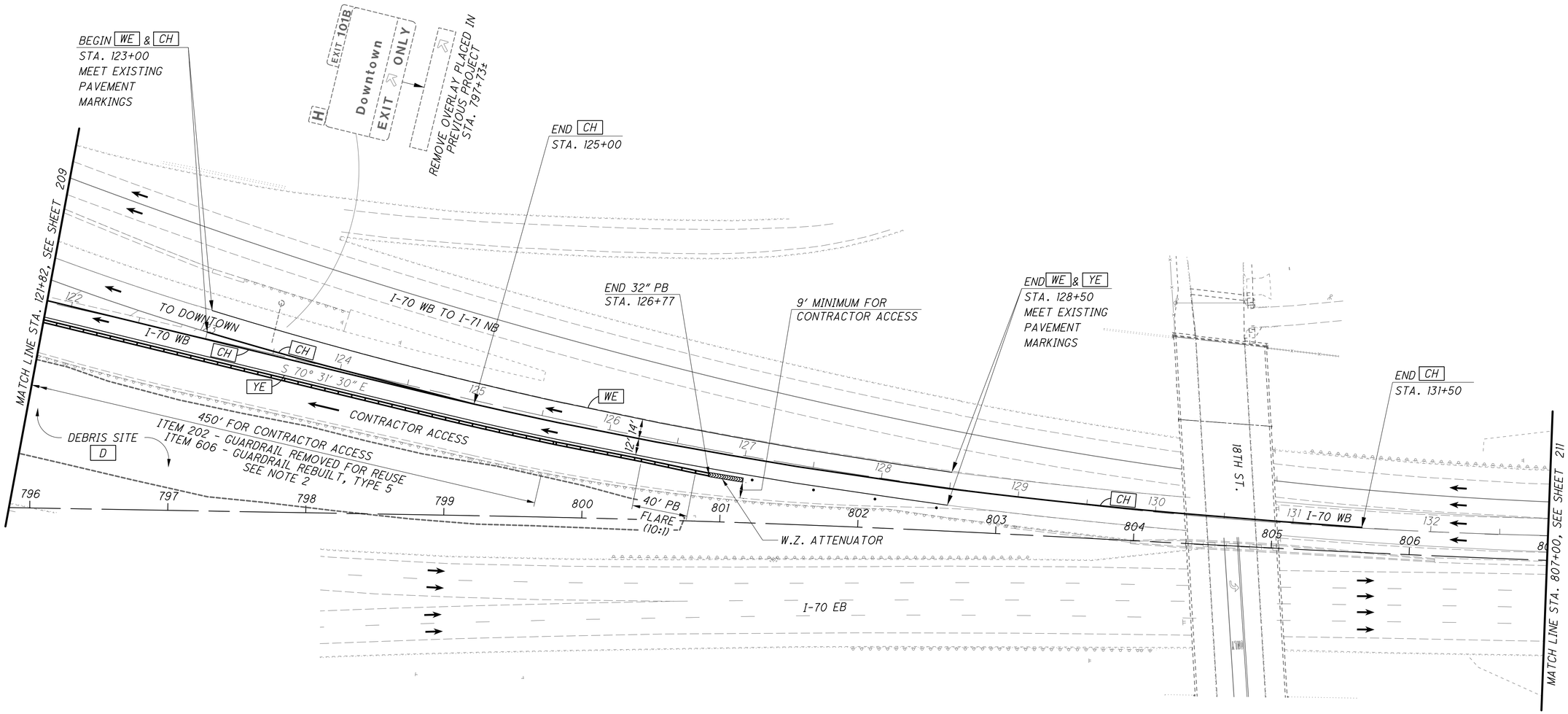

NOTES:

1. ALL PAVEMENT MARKINGS ARE EXISTING TO REMAIN OR PLACED IN A PREVIOUS STEP UNLESS OTHERWISE NOTED.

2. A QUANTITY OF ITEM 202 - GUARDRAIL REMOVED FOR REUSE - 450' AND ITEM 606 - GUARDRAIL REBUILT, TYPE 5 - 450' HAS BEEN CARRIED TO THE ROADWAY SUBSUMMARY.

2. DURING THIS PHASE, DEBRIS AND GUARDRAIL REMOVAL OF SITE D SHALL NOT EXTEND WEST OF PORTABLE BARRIER LIMITS (STA. 121+07).

SHEET LEGEND

TEMPORARY PAVEMENT PLACED PRIOR TO THIS PHASE

TEMPORARY PAVEMENT PLACED DURING THIS PHASE

WORK AREA

FOR COMPLETE LEGEND AND DRUM SPACING CHART, SEE SHEET 156

HORIZONTAL SCALE IN FEET 0 20 40 80

CALCULATED JAH
CHECKED JML

MAINTENANCE OF TRAFFIC - PHASE 1B, STEP 1
TRANS. I-70 WB

FRA-70-14.54

ms consultants, inc.

PLOT.CEL
ms consultants, inc.
msconsultants.com
Ohio DOT Workspace
70\71 East Interchange 2E
www.msconsultants.com
Batchplot Spec: \\msconsultants.com\files\production\03\60\06634_2E\standards\plotdrv\batchplt.spec
Pen Table: \\msconsultants.com\files\Standards\ustn\ohdot\V8i\ms\plotting\pen\V8i_ms_std.tbl
Plot Driver: \\msconsultants.com\files\Standards\ustn\ohdot\v8i\ms\plotting\PDF.pltcfg
34" x 22"
Model: Sheet View: FENCE_VIEW1
Printed: 9/28/2018 @ 10:10:58 AM By: kryan
File: N:\03\60\06634_2E\mot\sheets\105322MP1121.dgn

34" x 22"
Model: Sheet View: FENCE_VIEW1
Printed: 9/28/2018 @ 10:11:06 AM By: kryan
File: N:\03\60\06634_2E\mot\sheets\105322MP1122.dgn
Batchplot Spec: \\msconsultants.com\files\production\03\60\06634_2E\standards\plotdrv\batchplt.spc
Pen Table: \\msconsultants.com\files\Standards\ustn\ohdot\V8i\ms\plotting\pen\V8i_ms_std.tbl
Plot Driver: \\msconsultants.com\files\Standards\ustn\ohdot\v8i\ms\plotting\PDF.pltcfg
PCF: ohdotV8i
PCF: 60-06634_2E_Columbus
Ohio DOT Workspace
70\71 East Interchange 2E
ms consultants, inc.
msconsultants.com
PLOT.CEL
www.msconsultants.com

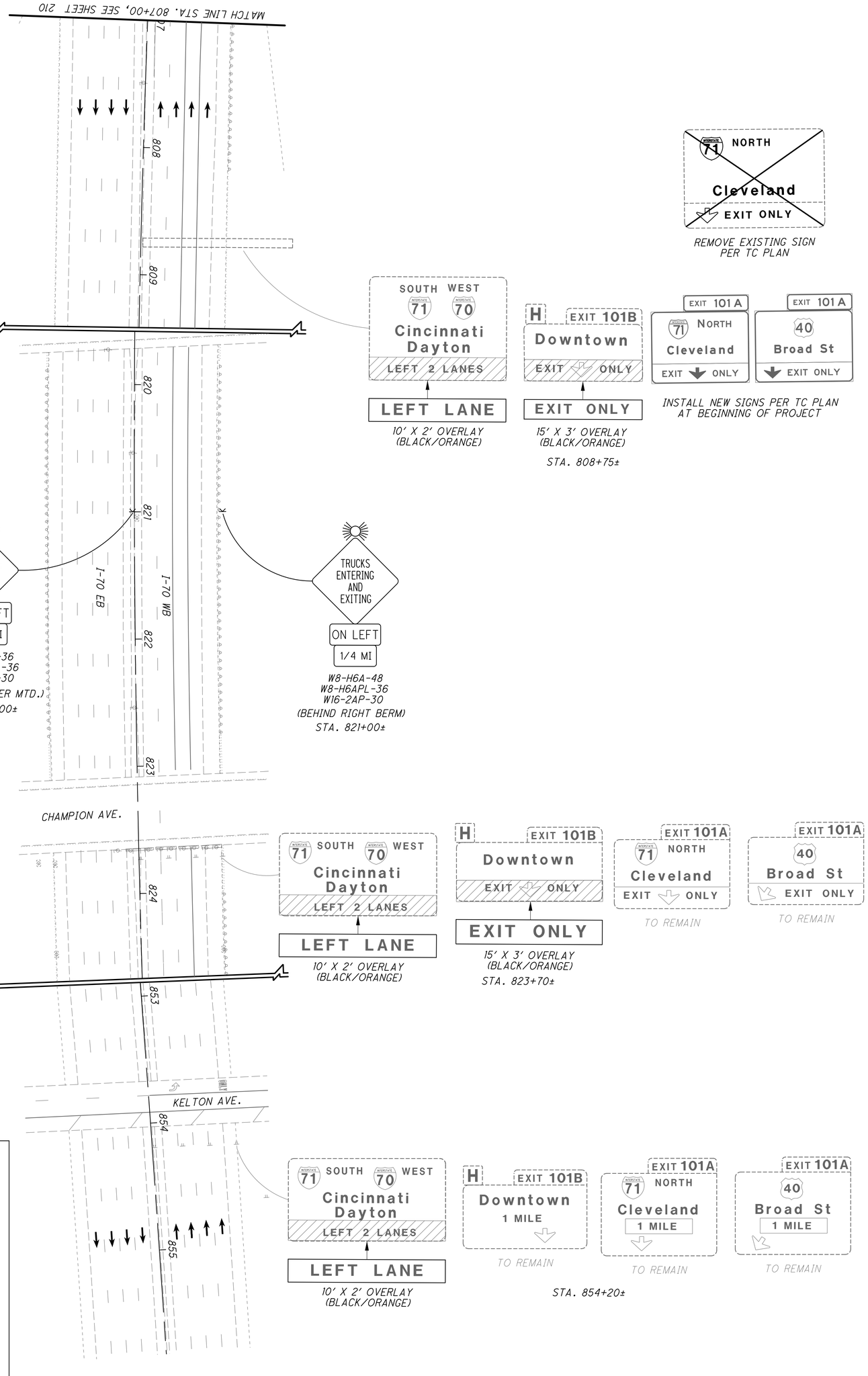

NOTE:
1. ALL PAVEMENT MARKINGS ARE EXISTING TO REMAIN OR PLACED IN A PREVIOUS STEP UNLESS OTHERWISE NOTED.

SHEET LEGEND

- WORK AREA
- TEMPORARY PAVEMENT PLACED DURING THIS PHASE
- TEMPORARY PAVEMENT PLACED PRIOR TO THIS PHASE

FOR COMPLETE LEGEND AND DRUM SPACING CHART, SEE SHEET 156

ms consultants, inc.

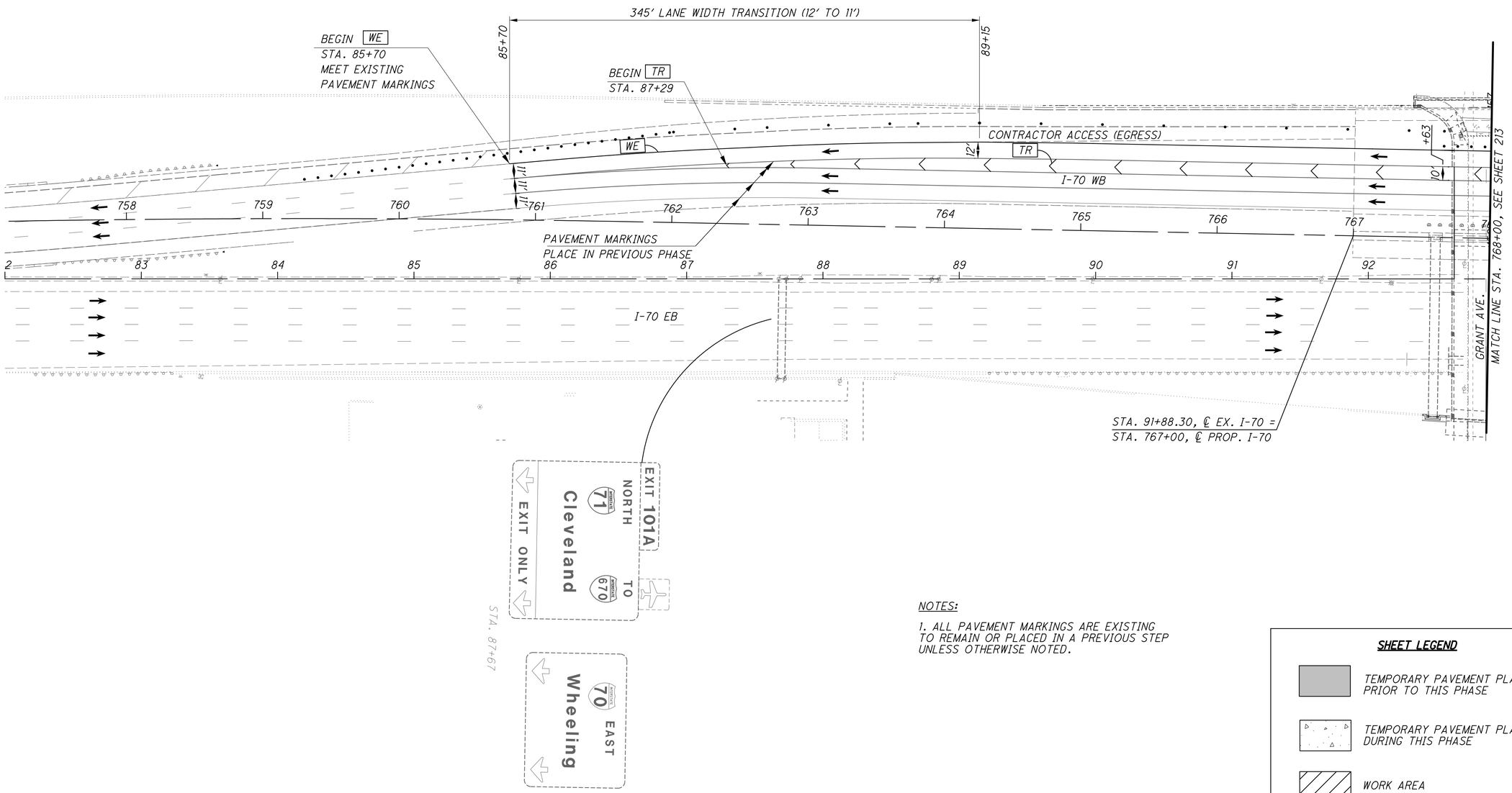

NOTES:

1. ALL PAVEMENT MARKINGS ARE EXISTING TO REMAIN OR PLACED IN A PREVIOUS STEP UNLESS OTHERWISE NOTED.

SHEET LEGEND

- TEMPORARY PAVEMENT PLACED PRIOR TO THIS PHASE
- TEMPORARY PAVEMENT PLACED DURING THIS PHASE
- WORK AREA

FOR COMPLETE LEGEND AND DRUM SPACING CHART, SEE SHEET 156

0 20 40 80
HORIZONTAL SCALE IN FEET

CALCULATED JAH
CHECKED JML

MAINTENANCE OF TRAFFIC - PHASE 1B, STEP 2
TRANS. I-70 WB & TRANS. I-71 SB(W)

FRA-70-14.54

ms consultants, inc.

PLOT.CEL
ms consultants, inc.
msconsultants.com
Ohio DOT Workspace
70\71 East Interchange 2E
www.msconsultants.com
Batchplot Spec: \\msconsultants.com\files\production\03\60\06634_2E\standards\plotdrv\batchplt.spc
Pen Table: \\msconsultants.com\files\Standards\ustn\ohdot\V8i\ms\plotting\pen\V8i_ms_std.tbl
Plot Driver: \\msconsultants.com\files\Standards\ustn\ohdot\v8i\ms\plotting\PDF.pltcfg
34" x 22"
Model: Sheet
Printed: 9/28/2018 @ 10:11:11 AM
File: N:\03\60\06634_2E\mot\sheets\105322MP6000.dgn
View: FENCE_VIEW1
By: kryan

PLOT.CEL
ms consultants, inc.
msconsultants.com
www.msconsultants.com
Ohio DOT Workspace
70\71 East Interchange 2E
Batchplot Spec: \\msconsultants.com\files\production\03\60\06634_2E\standards\plotdrv\batchplt.spc
Pen Table: \\msconsultants.com\files\Standards\ustn\ohdot\V8i\ms\plotting\pen\V8i_ms_std.tbl
Plot Driver: \\msconsultants.com\files\Standards\ustn\ohdot\V8i\ms\plotting\PDF.pltcfg
PCF: ohdotV8i
PCF: 60-06634_2E_Columbus
34" x 22"
Model: Sheet
Printed: 9/28/2018 @ 10:11:13 AM
File: N:\03\60\06634_2E\mot\sheets\105229MP6001.dgn
View: FENCE_VIEW1
By: kryan

NOTES:

1. FOR MAINTENANCE OF TRAFFIC ON FULTON STREET, SEE SHEETS 255 - 265.
2. ALL PAVEMENT MARKINGS ARE EXISTING TO REMAIN OR PLACED IN A PREVIOUS STEP UNLESS OTHERWISE NOTED.

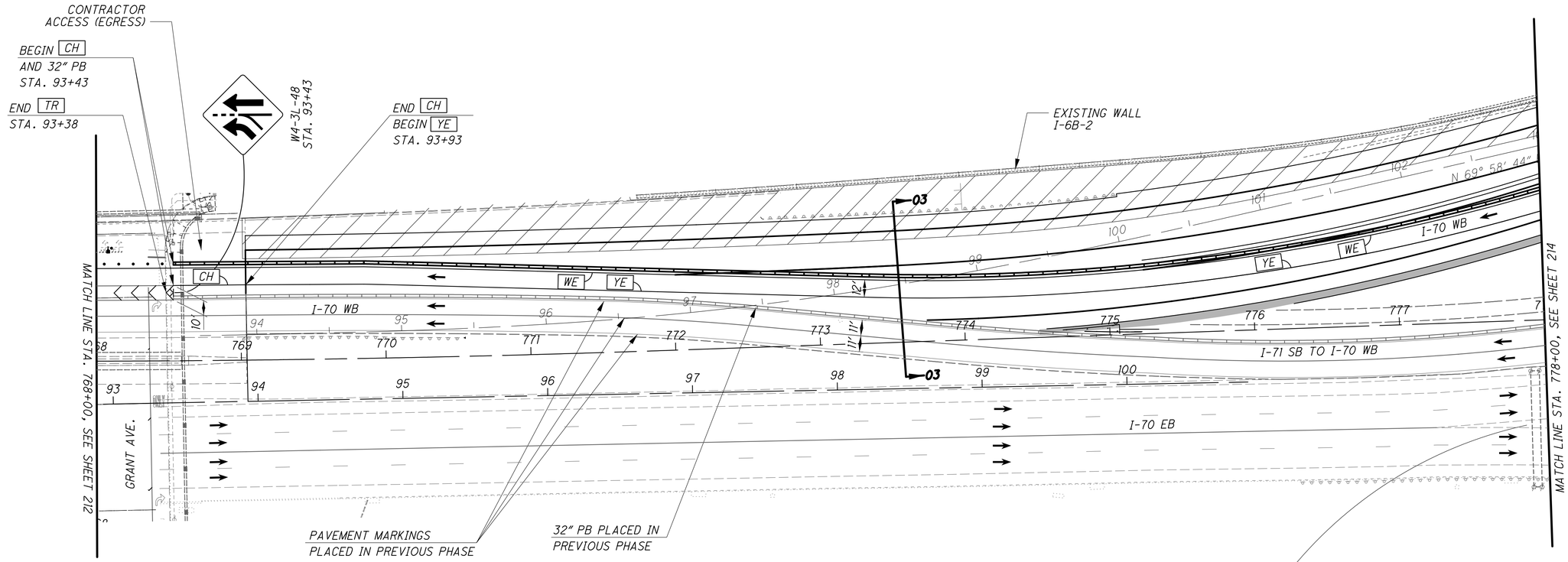

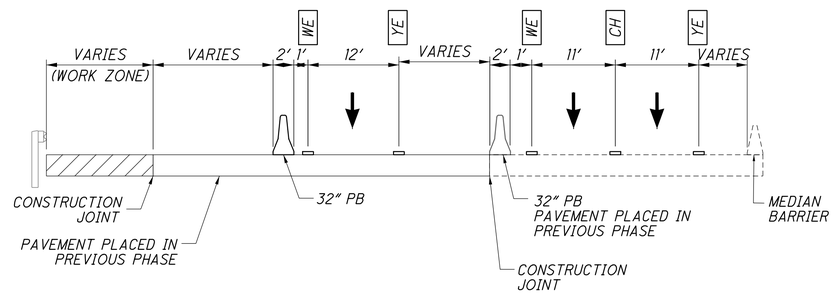

TYPICAL SECTION 03-03
NOT TO SCALE

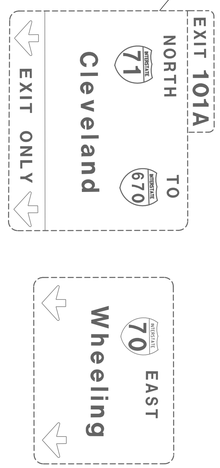

SHEET LEGEND

- TEMPORARY PAVEMENT PLACED PRIOR TO THIS PHASE
- TEMPORARY PAVEMENT PLACED DURING THIS PHASE
- WORK AREA

FOR COMPLETE LEGEND AND DRUM SPACING CHART, SEE SHEET 156

HORIZONTAL SCALE IN FEET
0 20 40 80

CALCULATED JAH
CHECKED JML

MAINTENANCE OF TRAFFIC - PHASE 1B, STEP 2
TRANS.I-70 WB & TRANS.I-71 SB(W)

FRA-70-14.54

213
2317

PLOT.CEL

ms consultants, inc.
msconsultants.com

www.msconsultants.com

Ohio DOT Workspace
70\71 East Interchange 2E

Batchplot Spec: \\msconsultants.com\files\production\03\60\06634_2E\standards\plotdrv\batchplt.SPC
Pen Table: \\msconsultants.com\files\Standards\odot\V8i\ms\plotting\pen\V8i_ms_std.TBL
Plot Driver: \\msconsultants.com\files\Standards\odot\V8i\ms\plotting\PDF.pltcfg

PDF: ohdotV8i
PDF: 60-06634_2E_Columbus

34" x 22"

Model: Sheet
Printed: 9/28/2018 @ 10:11:16 AM
File: N:\03\60\06634_2E\mot\sheets\103522MP6002.dgn
View: SHEET
By: kryan

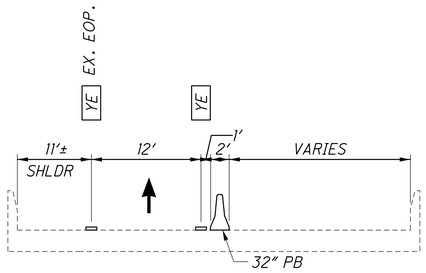

TYPICAL SECTION 56-56
NOT TO SCALE

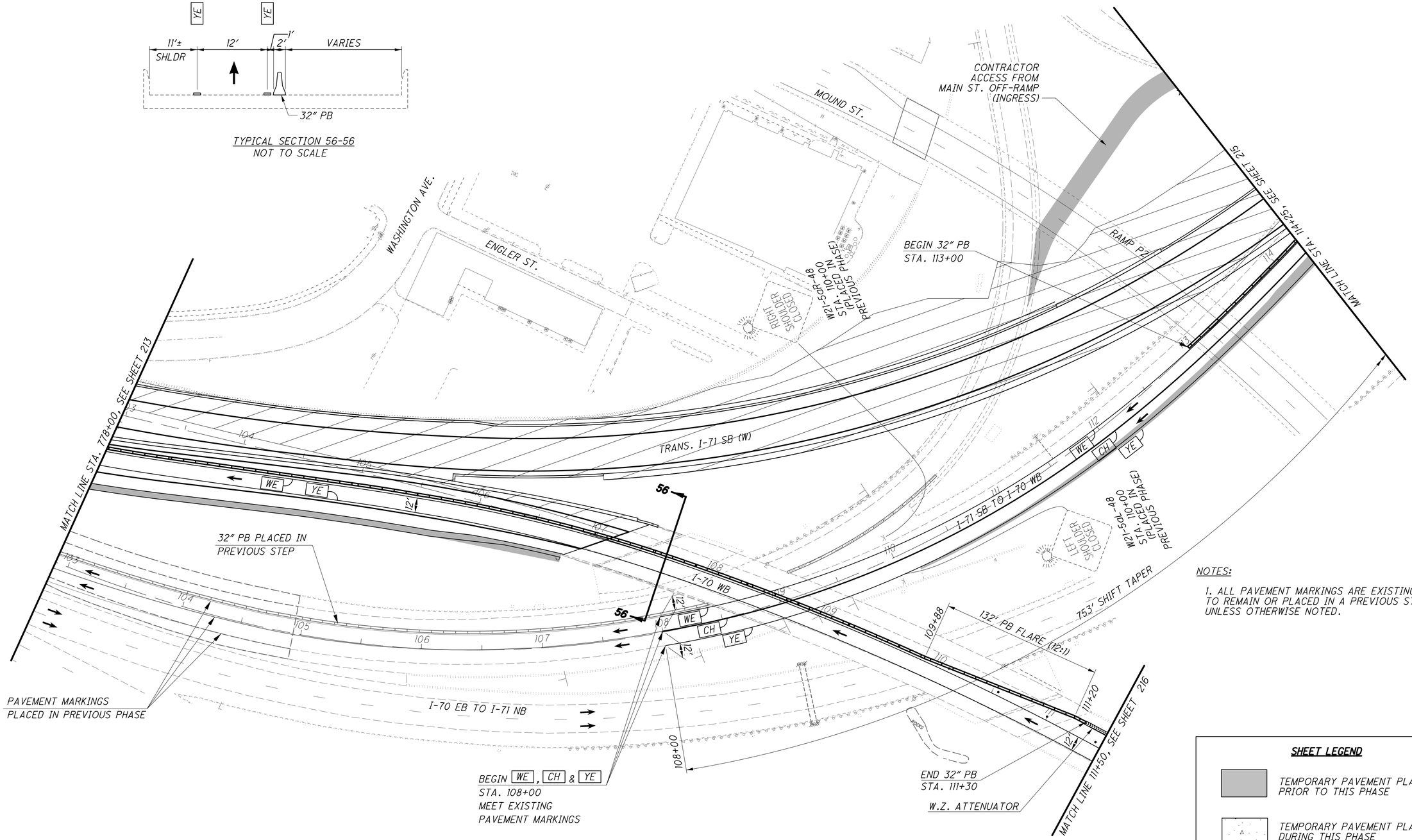

NOTES:

1. ALL PAVEMENT MARKINGS ARE EXISTING TO REMAIN OR PLACED IN A PREVIOUS STEP UNLESS OTHERWISE NOTED.

SHEET LEGEND

- TEMPORARY PAVEMENT PLACED PRIOR TO THIS PHASE
- TEMPORARY PAVEMENT PLACED DURING THIS PHASE
- WORK AREA

FOR COMPLETE LEGEND AND DRUM SPACING CHART, SEE SHEET 156

HORIZONTAL SCALE IN FEET
0 20 40 80

CALCULATED JAH
CHECKED JML

MAINTENANCE OF TRAFFIC - PHASE 1B, STEP 2
TRANS. I-70 WB & TRANS. I-71 SB(W)

FRA-70-14.54

214
2317

ms consultants, inc.

PLOT.CEL

ms consultants, inc.
msconsultants.com

www.msconsultants.com

Ohio DOT Workspace
70\71 East Interchange 2E
PCF: 60-06634_2E_Columbus

PCF: ohdot\V8i

Batchplot Spec: \\msconsultants.com\files\production\03\60\06634.2E\standards\ohdot\batchplt.spc
Pen Table: \\msconsultants.com\files\Standards\ustn\ohdot\V8i\ms\plotting\pen\V8i_ms_std.tbl
Plot Driver: \\msconsultants.com\files\Standards\ustn\ohdot\v8i\ms\plotting\PDF.pltcfg

Model: Sheet View: FENCE_VIEW1
Printed: 9/28/2018 @ 10:11:19 AM By: kryan
File: N:\03\60\06634.2E\mot\sheets\105322MP6003.dgn

34" x 22"

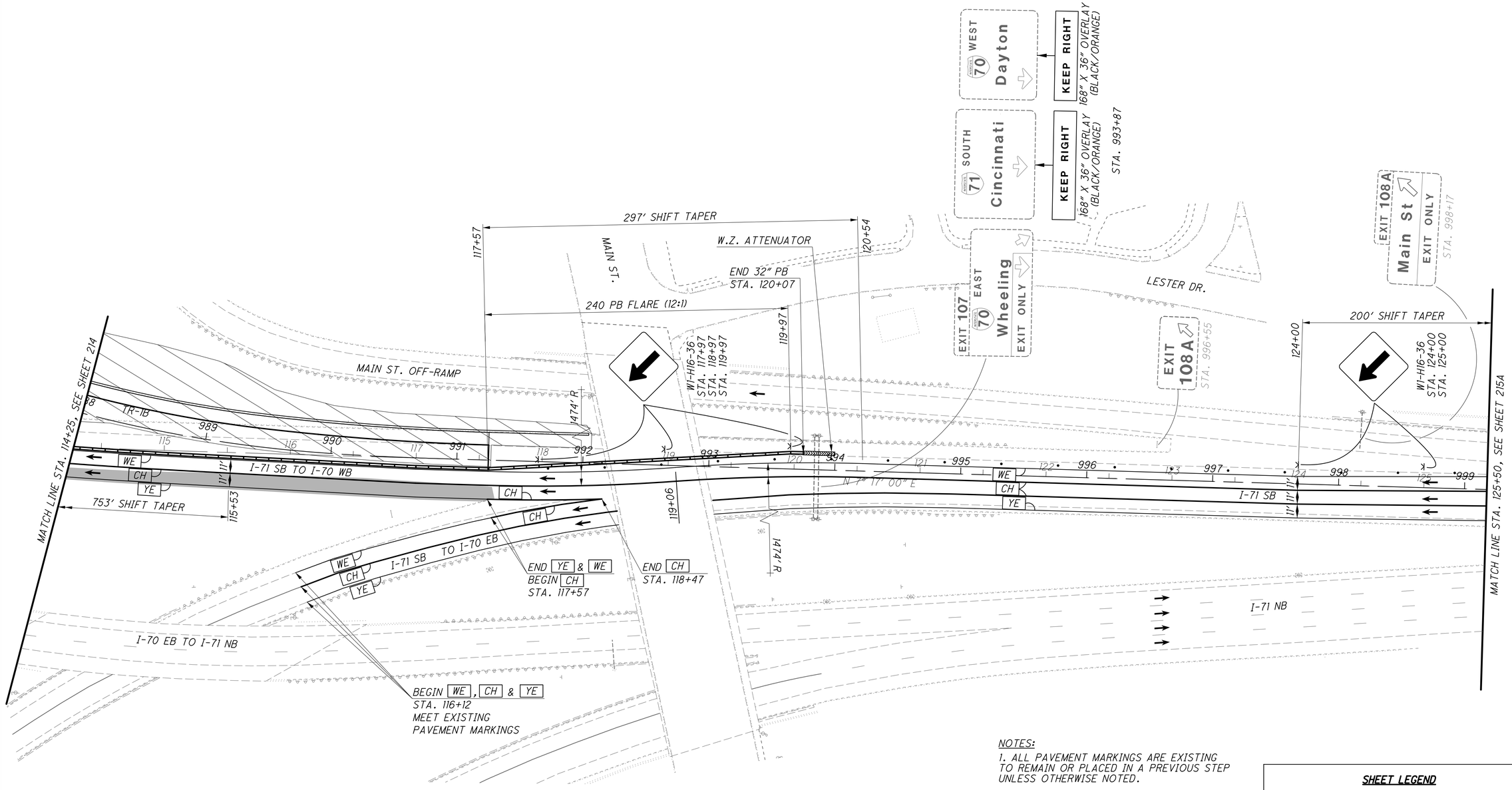

NOTES:

1. ALL PAVEMENT MARKINGS ARE EXISTING TO REMAIN OR PLACED IN A PREVIOUS STEP UNLESS OTHERWISE NOTED.

SHEET LEGEND

- TEMPORARY PAVEMENT PLACED PRIOR TO THIS PHASE
- TEMPORARY PAVEMENT PLACED DURING THIS PHASE
- WORK AREA

FOR COMPLETE LEGEND AND DRUM SPACING CHART, SEE SHEET 156

HORIZONTAL SCALE IN FEET
0 20 40 80

CALCULATED JAH
CHECKED JML

MAINTENANCE OF TRAFFIC - PHASE 1B, STEP 2
TRANS. I-70 WB & TRANS. I-71 SB(W)

FRA-70-14.54

215
2317

ms consultants, inc.

PLOT.CEL

ms consultants, inc.
msconsultants.com

www.msconsultants.com

Ohio DOT Workspace
70\71 East Interchange 2E

0 0.5" 1"

Batchplot Spec: \\msconsultants.com\files\production\03\60\06634_2E\standards\plotdrv\batchplt.spc
Pen Table: \\msconsultants.com\files\Standards\ustn\ohdot\V8i\ms\plotting\pen\V8i_ms_std.tbl PDF: ohdot\V8i
Plot Driver: \\msconsultants.com\files\Standards\ustn\ohdot\v8i\ms\plotting\PDF.pltcfg PCF: 60-06634_2E_Columbus

Model: Sheet
Printed: 9/28/2018 @ 10:11:21 AM View: FENCE_VIEW1
File: \\msconsultants.com\files\Production\03\60\06634_2E\mot\sheets\105322MP60003A.dgn By: kryan

34" x 22"

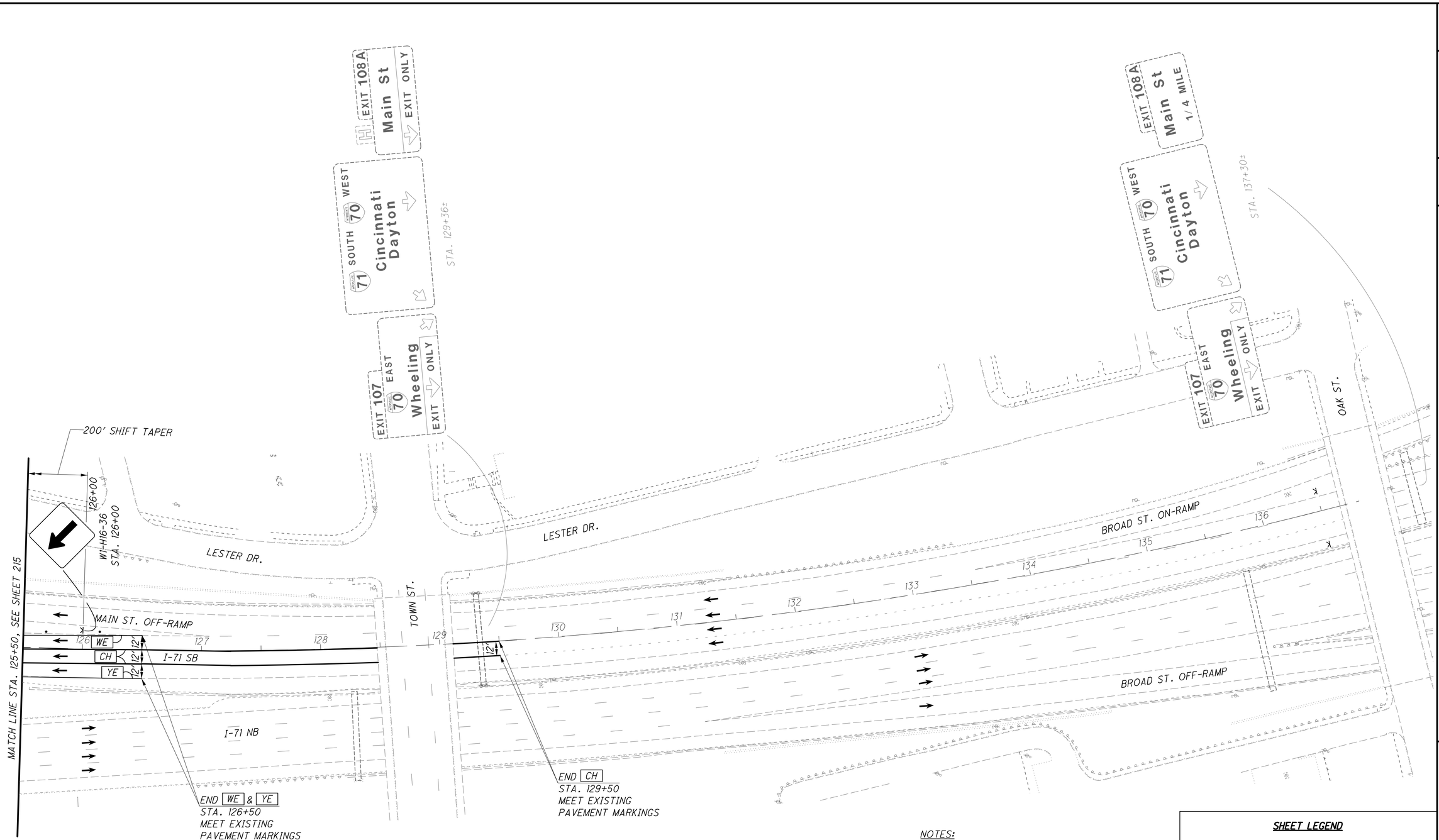

NOTES:

1. ALL PAVEMENT MARKINGS ARE EXISTING TO REMAIN OR PLACED IN A PREVIOUS STEP UNLESS OTHERWISE NOTED.

SHEET LEGEND

- TEMPORARY PAVEMENT PLACED PRIOR TO THIS PHASE
- TEMPORARY PAVEMENT PLACED DURING THIS PHASE
- WORK AREA

FOR COMPLETE LEGEND AND DRUM SPACING CHART, SEE SHEET 156

CALCULATED JAH
CHECKED JML

0 20 40 80
HORIZONTAL SCALE IN FEET

MAINTENANCE OF TRAFFIC - PHASE 1B, STEP 2
TRANS.I-71 SB(W)

FRA-70-14.54

215A
2317

PLOT.CEL

ms consultants, inc.
msconsultants.com

ms consultants, inc.
www.msconsultants.com

Ohio DOT Workspace
70\71 East Interchange 2E

0 0.5" 1"

Batchplot Spec: \\msconsultants.com\files\production\03\60\06634.2E\standards\plotdrv\batchplt.spc
Pen Table: \\msconsultants.com\files\Standards\usth\ohdot\V8i\ms\plotting\pen\V8i_ms_std.tbl
Plot Driver: \\msconsultants.com\files\Standards\usth\ohdot\V8i\ms\plotting\PDF.pltcfg
PDF: ohdotV8i
PCF: 60-06634_2E_Columbus

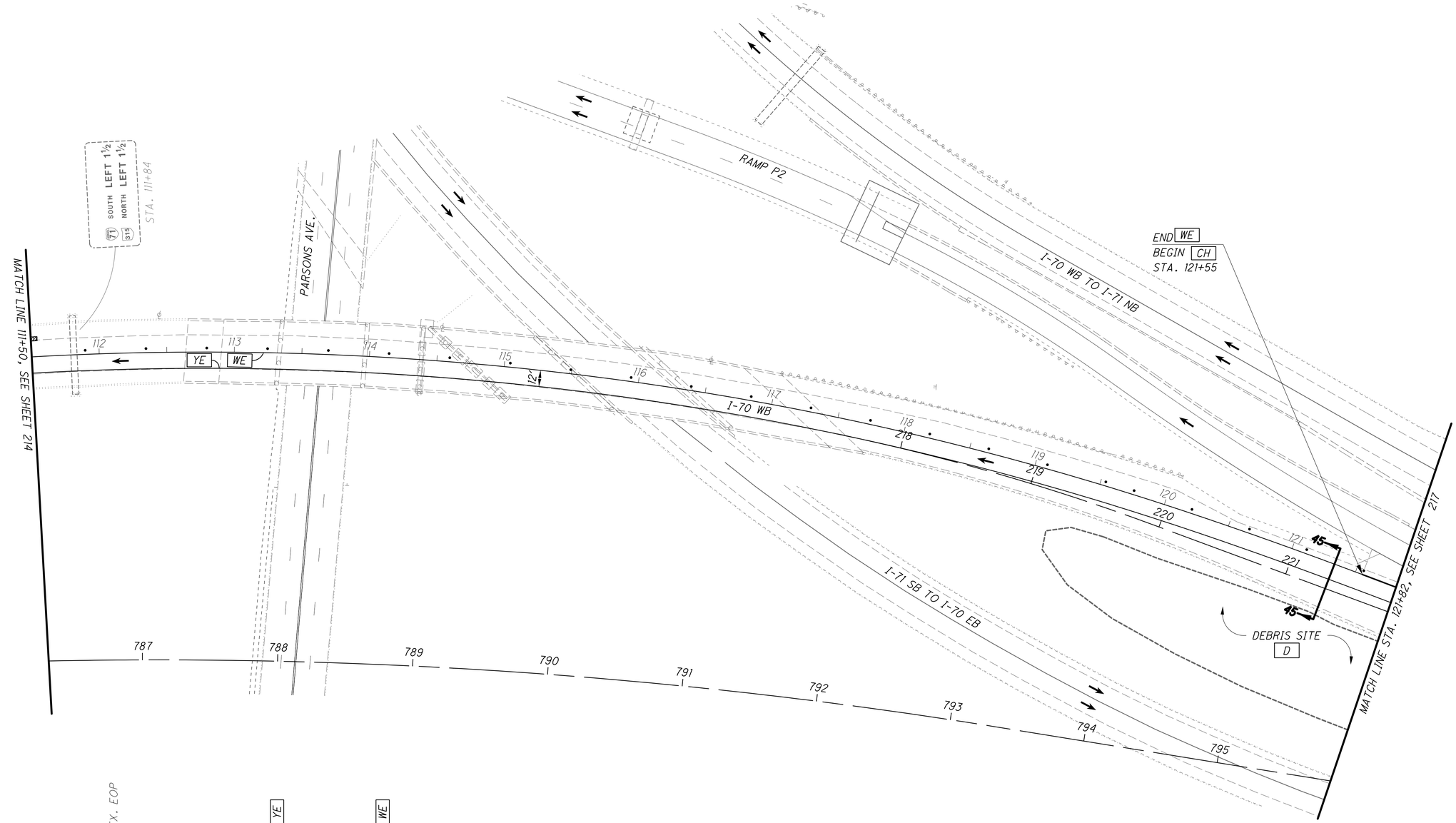

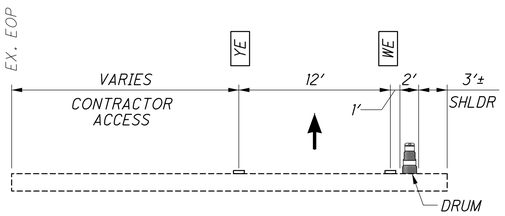

TYPICAL SECTION 45-45
NOT TO SCALE

NOTE:

1. ALL PAVEMENT MARKINGS ARE EXISTING TO REMAIN OR PLACED IN A PREVIOUS STEP UNLESS OTHERWISE NOTED.

SHEET LEGEND

- TEMPORARY PAVEMENT PLACED PRIOR TO THIS PHASE
- TEMPORARY PAVEMENT PLACED DURING THIS PHASE
- WORK AREA

FOR COMPLETE LEGEND AND DRUM SPACING CHART, SEE SHEET 156

0 20 40 80
HORIZONTAL SCALE IN FEET

CALCULATED JAH
CHECKED JML

MAINTENANCE OF TRAFFIC - PHASE 1B, STEP 2
TRANS.I-70 WB & TRANS.I-71 SB(W)

FRA-70-14.54

216
2317

Model: Sheet
Printed: 9/28/2018 @ 10:11:25 AM
File: N:\03\60\06634.2E\mot\sheets\05322MP6004.dgn
View: FENCE_VIEW1
By: kryan

34" x 22"

ms consultants, inc.

PLOT.CEL

ms consultants, inc.
msconsultants.com

www.msconsultants.com

Ohio DOT Workspace
70\71 East Interchange 2E

Batchplot Spec: \\msconsultants.com\files\production\03\60\06634.2E\standards\plotdrv\batchplt.spc
Pen Table: \\msconsultants.com\files\Standards\ustn\ohdot\V8i\ms\plotting\pen\V8i_ms_std.tbl
Plot Driver: \\msconsultants.com\files\Standards\ustn\ohdot\v8i\ms\plotting\PDF.pltcfg
PDF: ohdot\V8i
PDF: 60-06634_2E_Columbus

Model: Sheet
Printed: 9/28/2018 @ 10:11:28 AM
File: N:\03\60\06634.2E\mot\sheets\105322MP6005.dgn
View: FENCE_VIEW1
By: kryan

34" x 22"

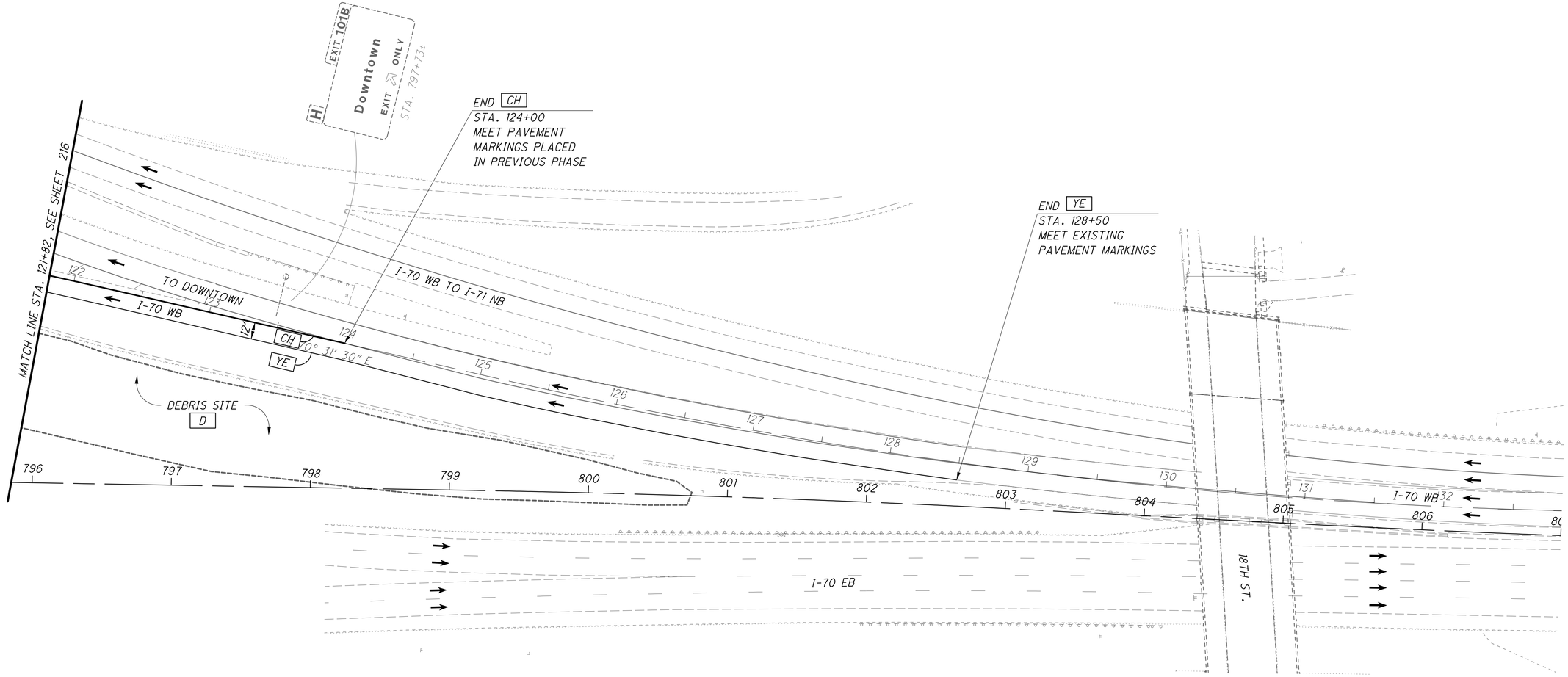

NOTE:

1. ALL PAVEMENT MARKINGS ARE EXISTING TO REMAIN OR PLACED IN A PREVIOUS STEP UNLESS OTHERWISE NOTED.

SHEET LEGEND

- TEMPORARY PAVEMENT PLACED PRIOR TO THIS PHASE
- TEMPORARY PAVEMENT PLACED DURING THIS PHASE
- WORK AREA

FOR COMPLETE LEGEND AND DRUM SPACING CHART, SEE SHEET 156

N

0 20 40 80
HORIZONTAL SCALE IN FEET

CALCULATED JAH
CHECKED JML

MAINTENANCE OF TRAFFIC - PHASE 1B, STEP 2
TRANS.I-70 WB & TRANS.I-71 SB(W)

FRA-70-14.54

217
2317

ms consultants, inc.

PLOT.CEL

ms consultants, inc.
msconsultants.com

www.msconsultants.com

Ohio DOT Workspace
70\71 East Interchange 2E

0 1" 0.5"

Batchplot Spec: \\msconsultants.com\Files\Production\03\60\06634_2E\standards\plotdrv\batchplt.spc PCF: ohdot\V8i
Pen Table: \\msconsultants.com\Files\Standards\astm\ohdot\V8i\ms\plotting\pen\V8i_ms_std.tbl PCF: 60-06634_2E_Columbus
Plot Driver: \\msconsultants.com\Files\Standards\astm\ohdot\v8i\ms\plotting\PDF.pltcfg

Model: Sheet View: FENCE_VIEW1
Printed: 9/28/2018 @ 10:11:34 AM By: kryan
File: N:\03\60\06634_2E\mat\sheets\105229MP001.dgn

34" x 22"

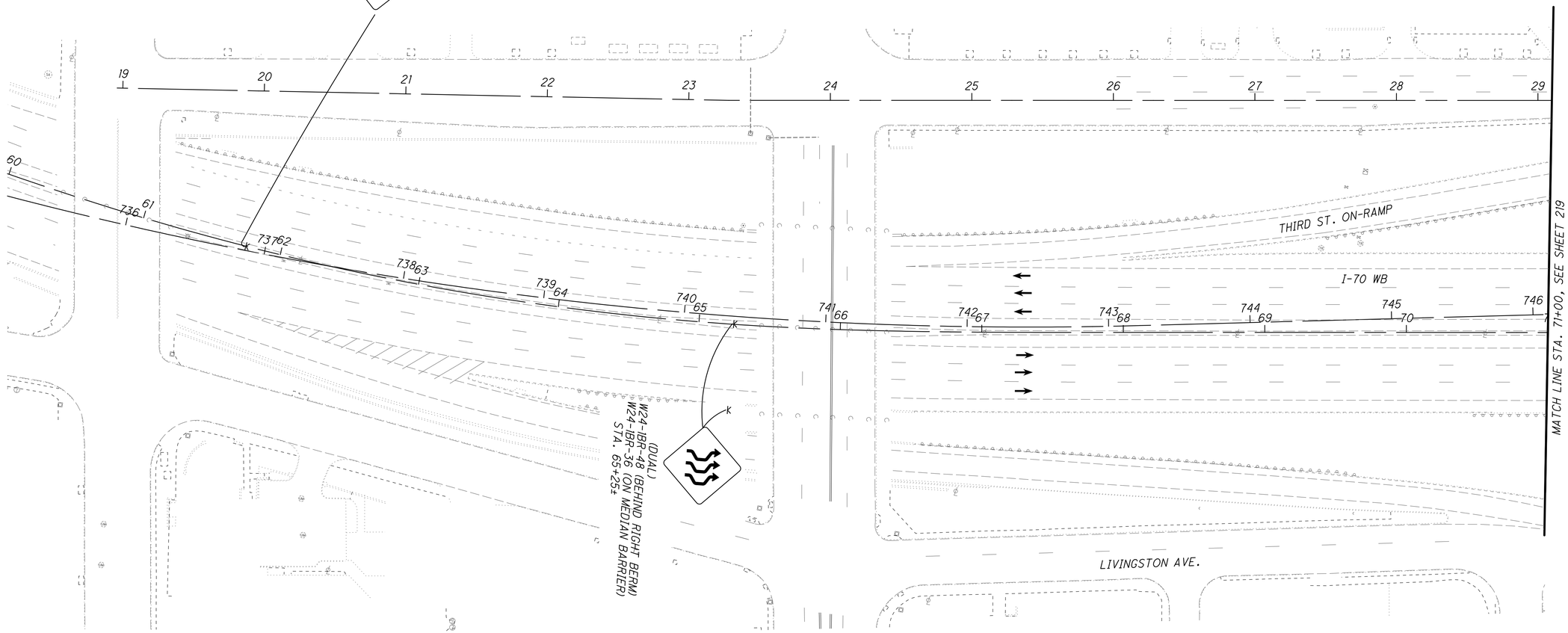

NOTES:

1. ALL PAVEMENT MARKINGS ARE EXISTING TO REMAIN OR PLACED IN A PREVIOUS STEP UNLESS OTHERWISE NOTED.

SHEET LEGEND

- TEMPORARY PAVEMENT PLACED PRIOR TO THIS PHASE
- TEMPORARY PAVEMENT PLACED DURING THIS PHASE
- WORK AREA

FOR COMPLETE LEGEND AND DRUM SPACING CHART, SEE SHEET 156

N

0 20 40 80
HORIZONTAL SCALE IN FEET

CALCULATED JAH
CHECKED JML

MAINTENANCE OF TRAFFIC - PHASE 1B, STEP 3
TRANS.I-71 SB(W), TR-1B, TR-1D & TR-2D

FRA-70-14.54

218
2317

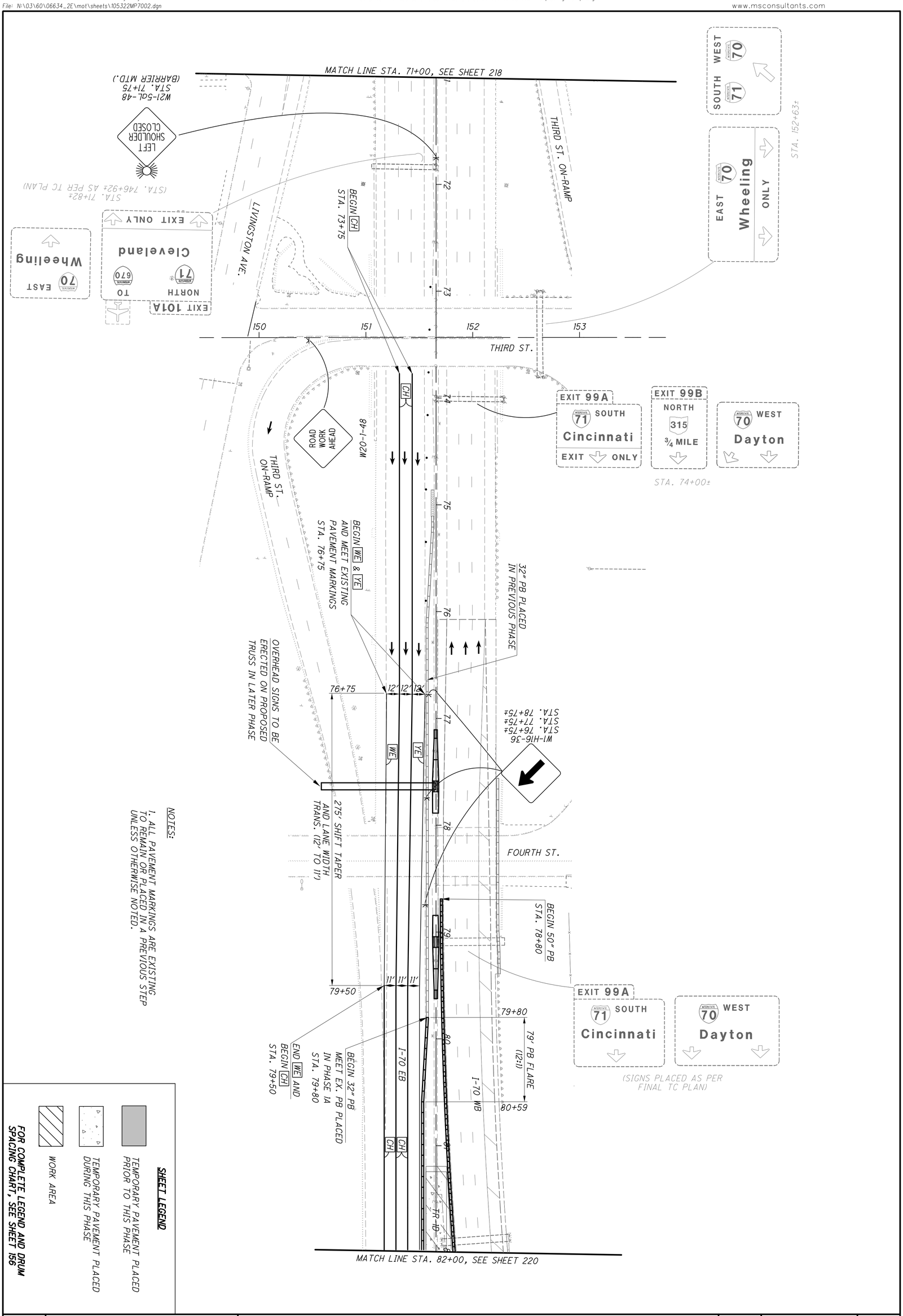
MATCH LINE STA. 71+00, SEE SHEET 218
W21-5aL-48
STA. 71+75
(BARRIER MTD.)
LEFT SHOULDER CLOSED
STA. 71+82±
(STA. 746+92± AS PER TC PLAN)
EXIT ONLY
Cleveland
NORTH
TO
EAST
Wheeling
EXIT 101A
LIVINGSTON AVE.
BEGIN CH
STA. 73+75
THIRD ST. ON-RAMP
SOUTH
WEST
EAST
Wheeling
ONLY
STA. 152+63±
150
151
152
153
THIRD ST.
EXIT 99A
SOUTH
Cincinnati
EXIT ONLY
EXIT 99B
NORTH
315
3/4 MILE
WEST
Dayton
STA. 74+00±
ROAD WORK AHEAD
W20-1-48
THIRD ST. ON-RAMP
BEGIN WE & YE AND MEET EXISTING PAVEMENT MARKINGS STA. 76+75
32" PB PLACED IN PREVIOUS PHASE
OVERHEAD SIGNS TO BE ERECTED ON PROPOSED TRUSS IN LATER PHASE
76+75
12' 12' 12'
W1-H16-36
STA. 76+75±
STA. 77+75±
STA. 78+75±
275' SHIFT TAPER AND LANE WIDTH TRANS. (12' TO 11')
FOURTH ST.
BEGIN 50" PB
STA. 78+80
79+50
11' 11' 11'
79+80
79' PB FLARE (12:1)
80+59
I-70 EB
I-70 WB
BEGIN 32" PB MEET EX. PB PLACED IN PHASE 1A STA. 79+80
END WE AND BEGIN CH STA. 79+50
EXIT 99A
SOUTH
Cincinnati
WEST
Dayton
(SIGNS PLACED AS PER FINAL TC PLAN)
TR-1D
MATCH LINE STA. 82+00, SEE SHEET 220
NOTES:
1. ALL PAVEMENT MARKINGS ARE EXISTING TO REMAIN OR PLACED IN A PREVIOUS STEP UNLESS OTHERWISE NOTED.
SHEET LEGEND
TEMPORARY PAVEMENT PLACED PRIOR TO THIS PHASE
TEMPORARY PAVEMENT PLACED DURING THIS PHASE
WORK AREA
FOR COMPLETE LEGEND AND DRUM SPACING CHART, SEE SHEET 156

PLOT.CEL
ms consultants, inc.
msconsultants.com
www.msconsultants.com

Ohio DOT Workspace
70\71 East Interchange 2E

PDF: ohdot\V8i
PCF: 60-06634_2E_Columbus

Batchplot Spec: \\msconsultants.com\Files\Production\03\60\06634_2E\standards\plotdir\batchplt.spec
Pen Table: \\msconsultants.com\Files\Standards\ustn\ohdot\V8i\ms\plotting\pen\V8i_ms_std.tbl
Plot Driver: \\msconsultants.com\Files\Standards\ustn\ohdot\v8i\ms\plotting\PDF.pltcfg

Model: Sheet View: FENCE_VIEW1
Printed: 9/28/2018 @ 10:11:41 AM By: kryan
File: N:\03\60\06634_2E\mot\sheets\105322MP7003.dgn

34" x 22"

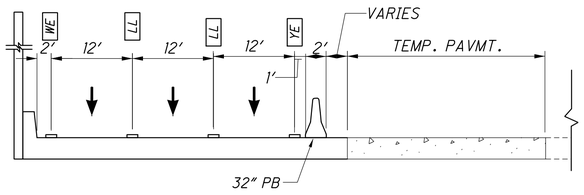

TYPICAL SECTION 50-50
NOT TO SCALE

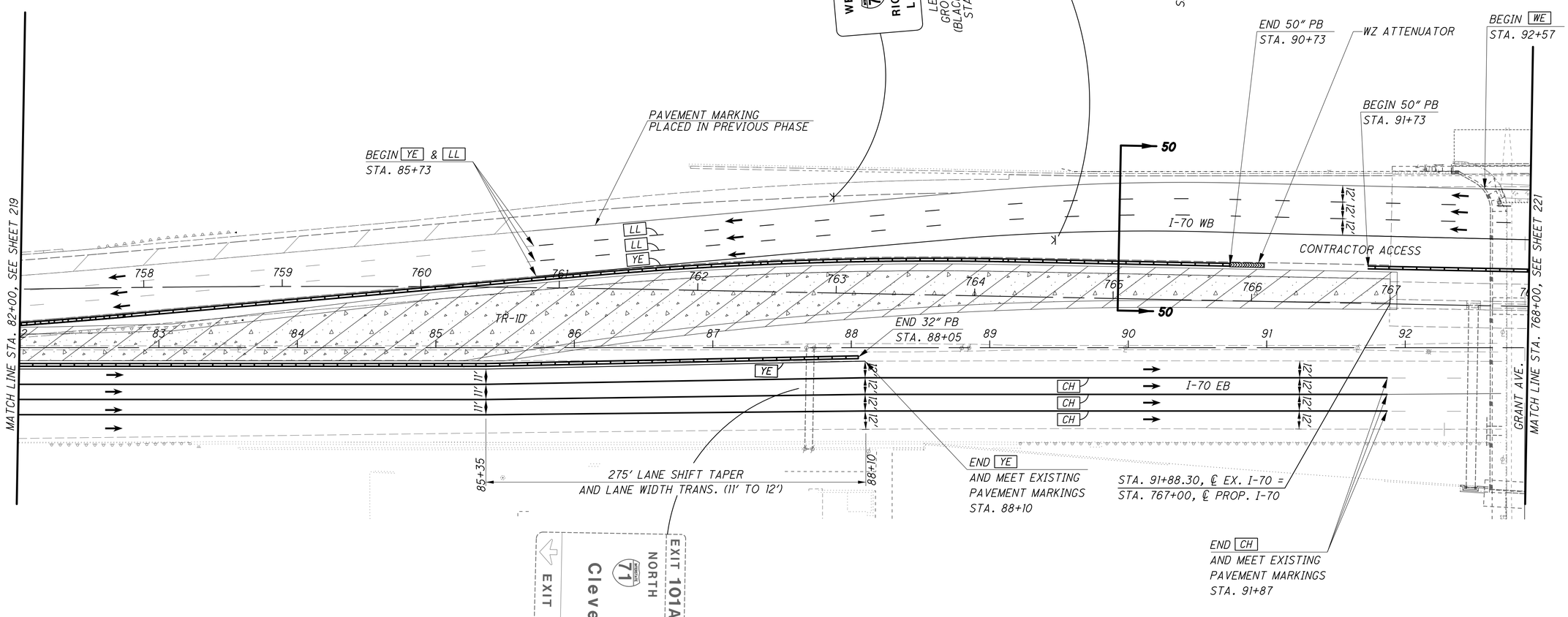

NOTES:

1. ALL PAVEMENT MARKINGS ARE EXISTING TO REMAIN OR PLACED IN A PREVIOUS STEP UNLESS OTHERWISE NOTED.

2. ALL DOWNWARD ARROWS ON OVERHEAD SIGNS SHALL BE PLACED OVER THE CENTER OF THEIR RESPECTIVE TRAVEL LANE.

SHEET LEGEND

- TEMPORARY PAVEMENT PLACED PRIOR TO THIS PHASE
- TEMPORARY PAVEMENT PLACED DURING THIS PHASE
- WORK AREA

FOR COMPLETE LEGEND AND DRUM SPACING CHART, SEE SHEET 156

HORIZONTAL SCALE IN FEET
0 20 40 80

CALCULATED JAH
CHECKED JML

MAINTENANCE OF TRAFFIC - PHASE 1B, STEP 3
TRANS.I-71 SB(W), TR-1B, TR-1D & TR-2D

FRA-70-14.54

220
2317

ms consultants, inc.

PLOT.CEL

ms consultants, inc.
msconsultants.com

www.msconsultants.com

Ohio DOT Workspace
70\71 East Interchange 2E

1"
0.5"
0

Batchplot Spec: \\msconsultants.com\files\production\03\60\06634_2E\standards\plotdrv\batchplt.spc PCF: ohdot1V8i
Pen Table: \\msconsultants.com\files\Standards\astm\ohdot\V8i\ms\plotting\pen\V8i_ms_std.tbl PCF: 60-06634_2E_Columbus
Plot Driver: \\msconsultants.com\files\Standards\astm\ohdot\v8i\ms\plotting\PDF.pltcfg

Model: Sheet
Printed: 9/28/2018 @ 10:11:44 AM View: FENCE_VIEW1
By: kryan
File: N:\03\60\06634_2E\mot\Sheets\105322MP7004.dgn

34" x 22"

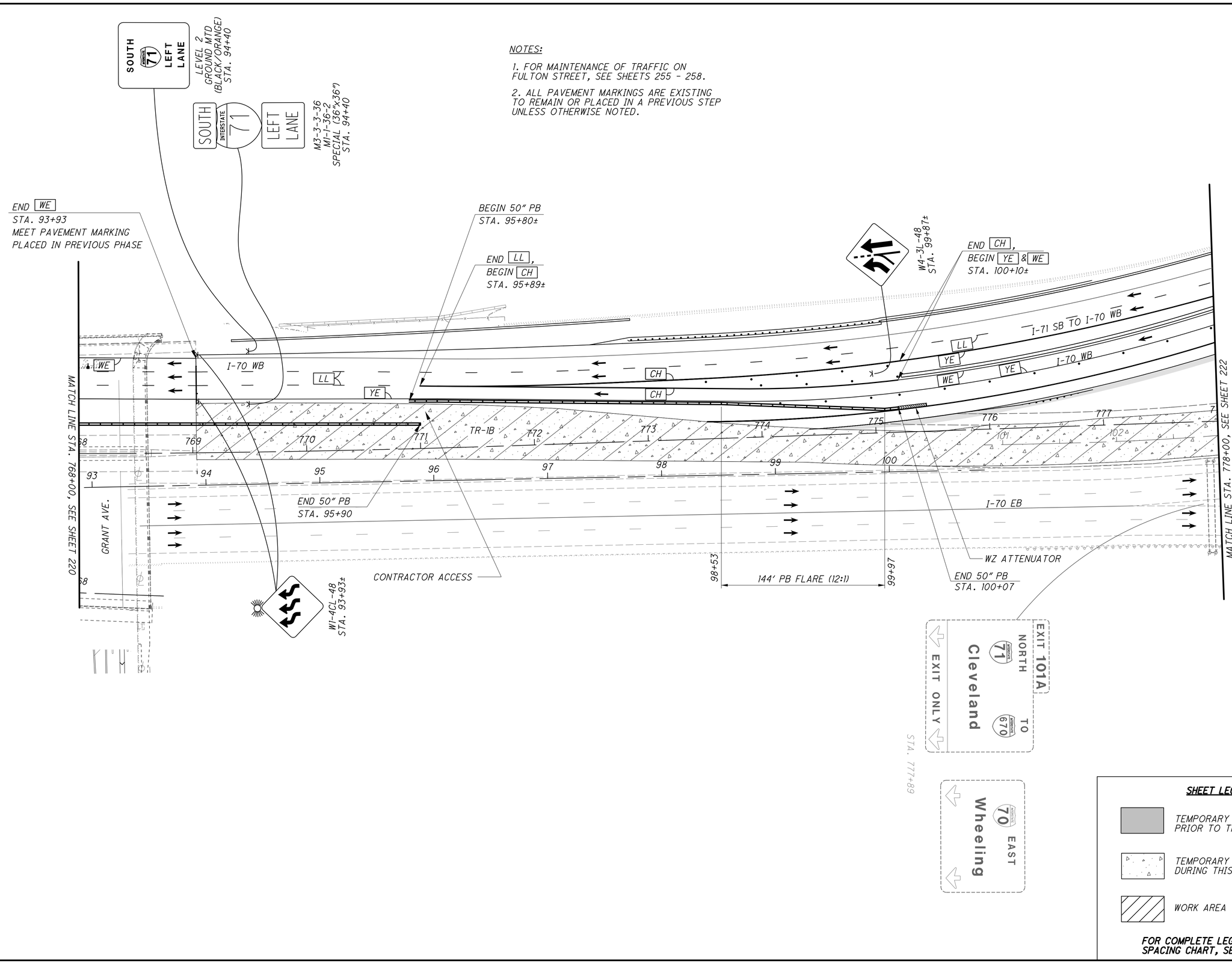

N

0 20 40 80
HORIZONTAL SCALE IN FEET

CALCULATED JAH
CHECKED JML

MAINTENANCE OF TRAFFIC - PHASE 1B, STEP 3
TRANS. I-71 SB(W), TR-1B, TR-1D & TR-2D

FRA-70-14.54

221
2317

PLOT.CEL

ms consultants, inc.
msconsultants.com

www.msconsultants.com

Ohio DOT Workspace
70\71 East Interchange 2E

0 0.5" 1"

Batchplot Spec: \\msconsultants.com\files\production\03\60\06634_2E\standards\plotdrv\batchplt.SPC
Pen Table: \\msconsultants.com\files\Standards\usitn\ohdot\V8i\ms\plotting\pen\V8i_ms_std.TBL
Plot Driver: \\msconsultants.com\files\Standards\usitn\ohdot\V8i\ms\plotting\PDF.pltcfg

PDF: ohdotV8i
PDF: 60-06634_2E_Columbus

34" x 22"

Model: Sheet
Printed: 9/28/2018 @ 10:11:48 AM
File: N:\03\60\06634_2E\mot\sheets\103522MP1005.dgn

View: SHEET
By: kryan

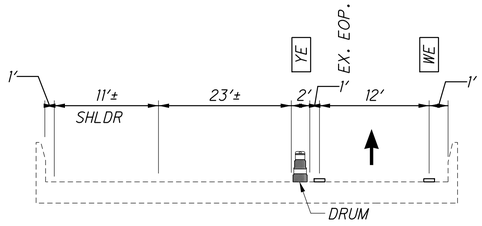

TYPICAL SECTION 56-56
NOT TO SCALE

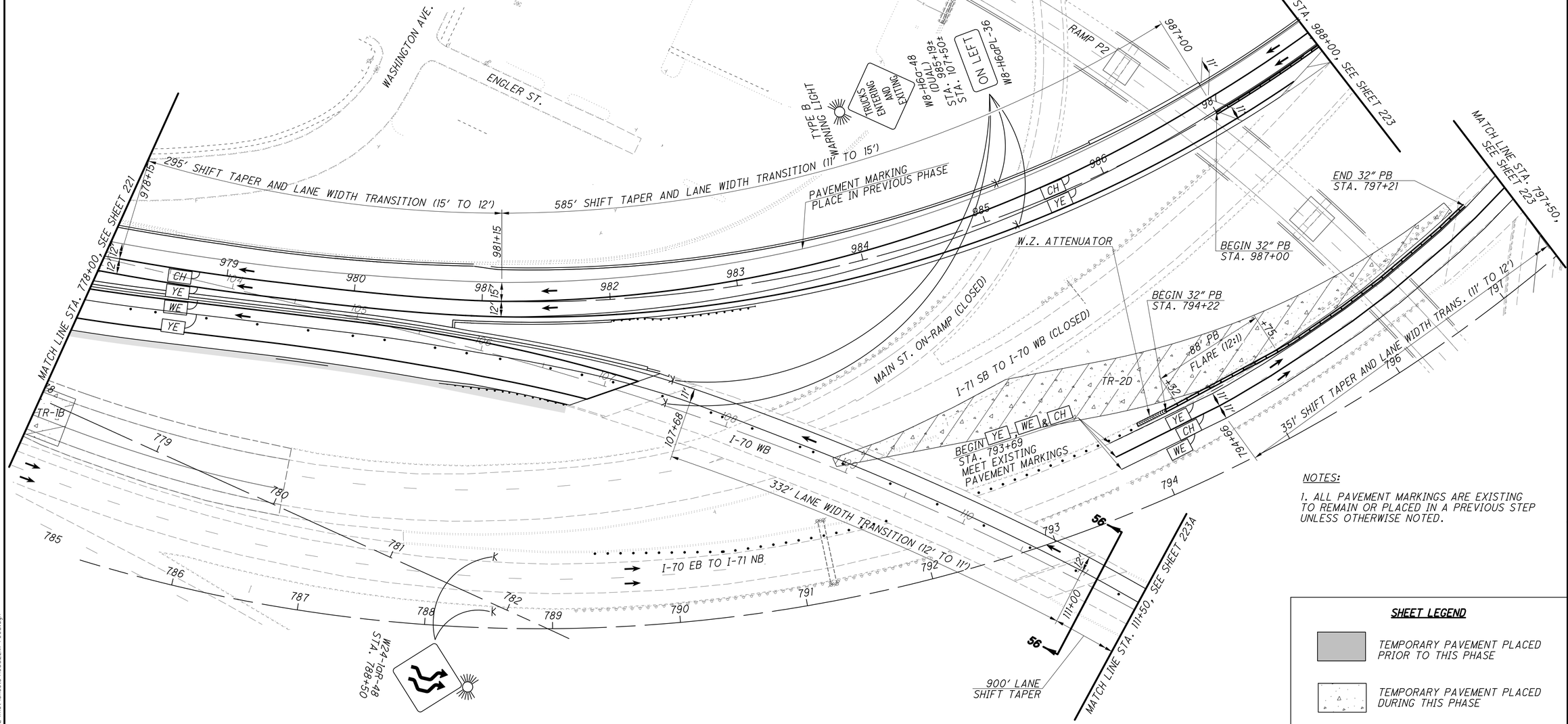

NOTES:

1. ALL PAVEMENT MARKINGS ARE EXISTING TO REMAIN OR PLACED IN A PREVIOUS STEP UNLESS OTHERWISE NOTED.

SHEET LEGEND

- TEMPORARY PAVEMENT PLACED PRIOR TO THIS PHASE
- TEMPORARY PAVEMENT PLACED DURING THIS PHASE
- WORK AREA

FOR COMPLETE LEGEND AND DRUM SPACING CHART, SEE SHEET

HORIZONTAL SCALE IN FEET
0 20 40 80

CALCULATED JAH
CHECKED JML

MAINTENANCE OF TRAFFIC - PHASE 1B, STEP 3
TRANS. I-71 SB(W), TR-1B, TR-1D & TR-2D

FRA-70-14.54

222
2317

ms consultants, inc.

PLOT.CEL

ms consultants, inc.
msconsultants.com

ms consultants, inc.
www.msconsultants.com

Ohio DOT Workspace
70\71 East Interchange 2E

0 1" 0.5"

Batchplot Spec: \\msconsultants.com\files\production\03\60\06634.2E\standards\plotdrv\batchplt.spc PDF: ohdot\V8i
Pen Table: \\msconsultants.com\files\Standards \ustn\ohdot\V8i\ms\plotting\pen\V8i_ms_std.tbl PCF: 60-06634_2E_Columbus
Plot Driver: \\msconsultants.com\files\Standards \ustn\ohdot\v8i\ms\plotting\PDF.pltcfg

Model: Sheet View: FENCE_VIEW1
Printed: 9/28/2018 @ 10:11:51 AM By: kryan
File: N:\03\60\06634_2E\mot\sheets\105322MP1006.dgn

34" x 22"

PAVEMENT MARKING
PLACE IN PREVIOUS PHASE

BEGIN WE
STA. 989+56

MAIN ST. OFF-RAMP

MATCH LINE STA. 988+00, SEE SHEET 222

I-71 SB TO I-70 WB

BEGIN WE , YE & CH
STA. 989+85
MEET EXISTING
PAVEMENT MARKINGS

BEGIN 32" PB
STA. 990+83

I-71 SB TO I-70 EB

Y-CONNECTOR

END 32" PB
STA. 992+31

W.Z. ATTENUATOR

991+50

60' PB FLARE (12:1)

MAIN ST.

END YE & WE
BEGIN CH
STA. 992+56

600' SHIFT LANE TAPER

LESTER DR.

107 EAST 70 Wheeling EXIT ONLY

SOUTH 71 Cincinnati

KEEP RIGHT
(PLACED IN PREVIOUS PHASE)

WEST 70 Dayton

KEEP RIGHT
(PLACED IN PREVIOUS PHASE)

STA. 993+87

EXIT 108 A
STA. 996+55

997+50

EXIT 108 A
Main St
EXIT ONLY
STA. 998+17

WEST INTERSTATE 70
M3-4-36
M1-1-36-2

W1-4BR-48
STA. 132+50±

END CH
STA. 993+77

I-71 SB

END CH , WE & YE
STA. 999+00
MEET EXISTING
PAVEMENT MARKINGS

I-71 NB

I-70 EB TO I-71 NB

MATCH LINE STA. 797+50, SEE SHEET 222

351'
SHIFT TAPER AND
LANE WIDTH TRANS. (11' TO 12')

END WE , YE & CH
STA. 798+17
MEET EXISTING
PAVEMENT MARKINGS

W12-1-48
STA. 992+75

NOTES:

1. ALL PAVEMENT MARKINGS ARE EXISTING TO REMAIN OR PLACED IN A PREVIOUS STEP UNLESS OTHERWISE NOTED.

SHEET LEGEND

- TEMPORARY PAVEMENT PLACED PRIOR TO THIS PHASE
- TEMPORARY PAVEMENT PLACED DURING THIS PHASE
- WORK AREA

FOR COMPLETE LEGEND AND DRUM SPACING CHART, SEE SHEET 156

HORIZONTAL SCALE IN FEET
0 20 40 80

CALCULATED JAH
CHECKED JML

MAINTENANCE OF TRAFFIC - PHASE 1B, STEP 3
TRANS.I-71 SB(W), TR-1B, TR-1D & TR-2D

FRA-70-14.54

223
2317

PLOT.CEL

ms consultants, inc.
msconsultants.com

Batchplot Spec: \\msconsultants.com\Files\production\Q3\60\06634_2E\standards\plotdrv\batchplt.spc
Pen Table: N:\Q3\60\06634_2E\standards\tables\V8i_ms_std_06634_2D_Plan View.tbl
Plot Driver: \\msconsultants.com\Files\Standards\usin\ohdot\v8i\ms\plotting\PDF.pltcfg

Model: Sheet
Printed: 9/28/2018 @ 10:11:53 AM
File: N:\Q3\60\06634_2E\mot\sheets\105322MP70064.dgn

View: FENCE_VIEW1
By: kryan

34" x 22"

0 1" 0.5"

ODF: ohdot\V8i
PCF: 60-06634_2E_Columbus

Ohio DOT Workspace
70\71 East Interchange 2E

www.msconsultants.com

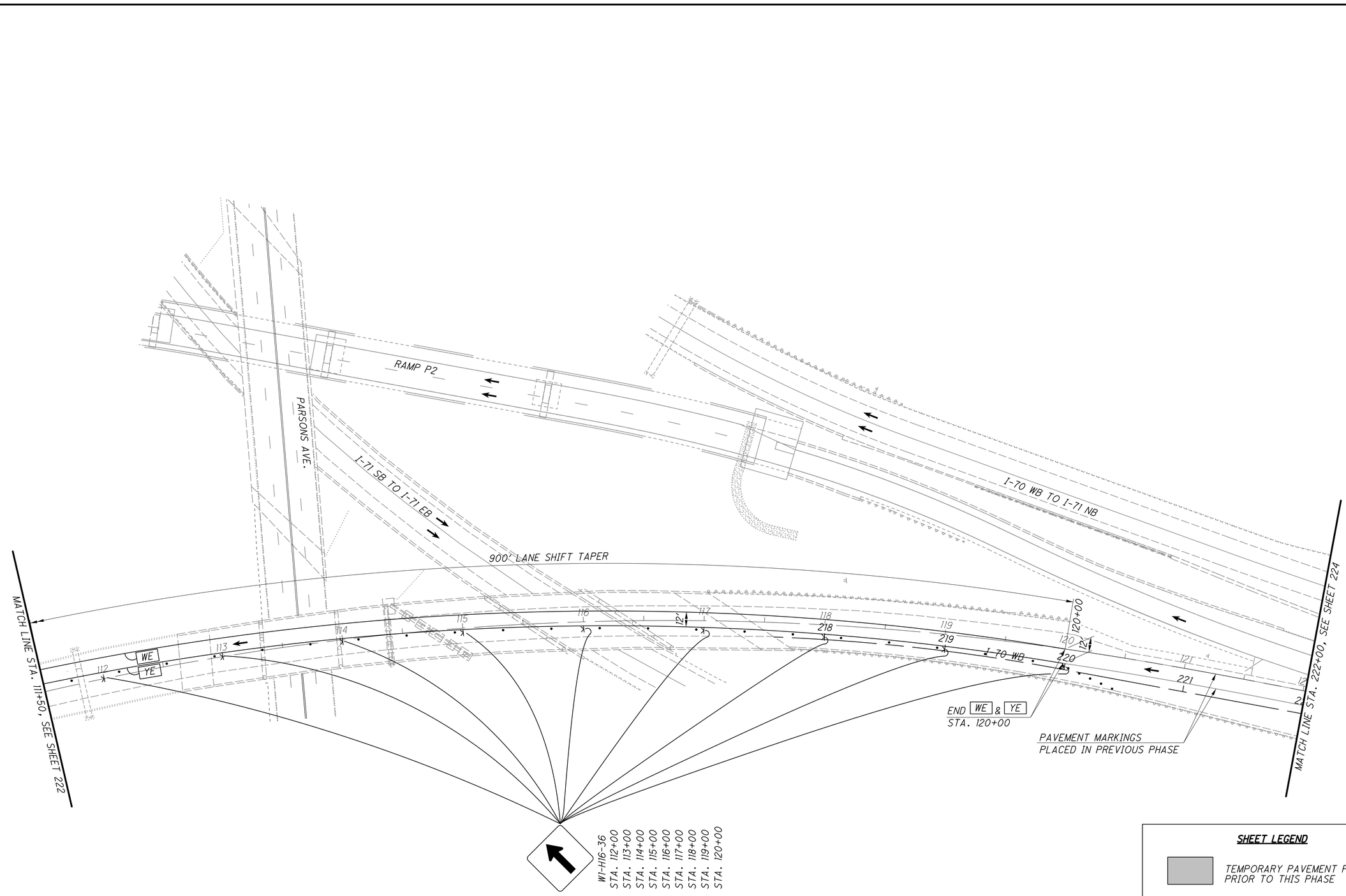

SHEET LEGEND

- TEMPORARY PAVEMENT PLACED PRIOR TO THIS PHASE
- TEMPORARY PAVEMENT PLACED DURING THIS PHASE
- WORK AREA

FOR COMPLETE LEGEND AND DRUM SPACING CHART, SEE SHEET 156

NOTES:

1. ALL PAVEMENT MARKINGS ARE EXISTING TO REMAIN OR PLACED IN A PREVIOUS STEP UNLESS OTHERWISE NOTED.

CALCULATED JAH
CHECKED JML

0 20 40 80
HORIZONTAL SCALE IN FEET

MAINTENANCE OF TRAFFIC - PHASE 1B, STEP 3
TRANS.I-71 SB(W), TR-1B, TR-1D & TR-2D

FRA-70-14.54

223A
2317

ms consultants, inc.

PLOT.CEL

ms consultants, inc.
msconsultants.com

www.msconsultants.com

Ohio DOT Workspace
70\71 East Interchange 2E

1"
0.5"
0

Batchplot Spec: \\msconsultants.com\Files\Production\03\60\06634_2E\standards\plotdrv\batchplt.spc
Pen Table: \\msconsultants.com\Files\Standards\usitn\ohdot\V8i\ms\plotting\pen\V8i_ms_std.tbl
Plot Driver: \\msconsultants.com\Files\Standards\usitn\ohdot\v8i\ms\plotting\PDF.pltcfg
PDF: ohdotV8i
PDF: 60-06634_2E_Columbus

Model: Sheet
Printed: 9/28/2018 @ 10:11:57 AM
File: N:\03\60\06634_2E\mot\sheets\105322MP7007.dgn
View: FENCE_VIEW1
By: kryan

34" x 22"

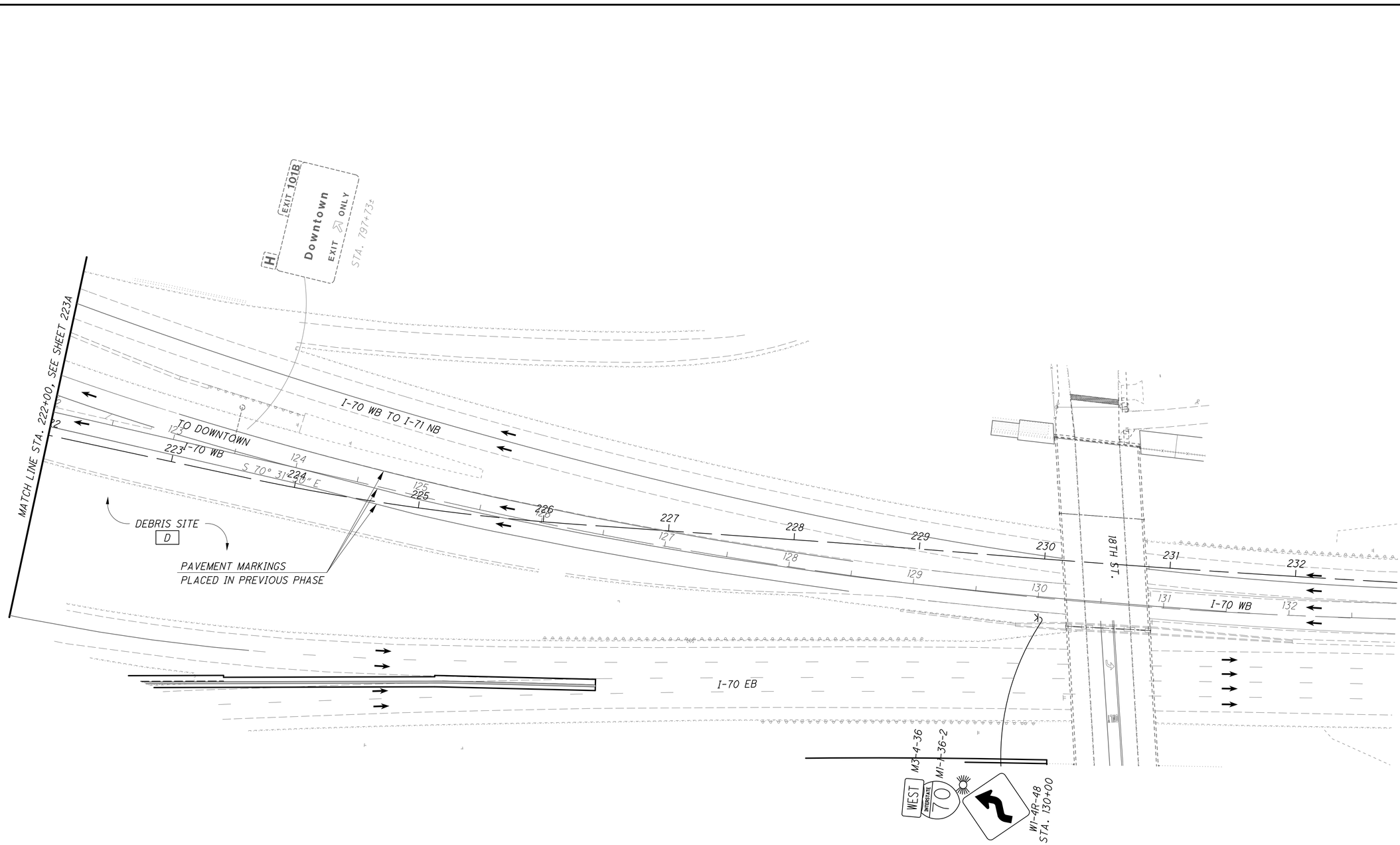

NOTE:

1. ALL PAVEMENT MARKINGS ARE EXISTING TO REMAIN OR PLACED IN A PREVIOUS STEP UNLESS OTHERWISE NOTED.

SHEET LEGEND

- TEMPORARY PAVEMENT PLACED PRIOR TO THIS PHASE
- TEMPORARY PAVEMENT PLACED DURING THIS PHASE
- WORK AREA

FOR COMPLETE LEGEND AND DRUM SPACING CHART, SEE SHEET 156

HORIZONTAL SCALE IN FEET
0 20 40 80

CALCULATED JAH
CHECKED JML

MAINTENANCE OF TRAFFIC - PHASE 1B, STEP 3
TRANS.I-71 SB(W), TR-1B, TR-1D & TR-2D

FRA-70-14.54

ms consultants, inc.

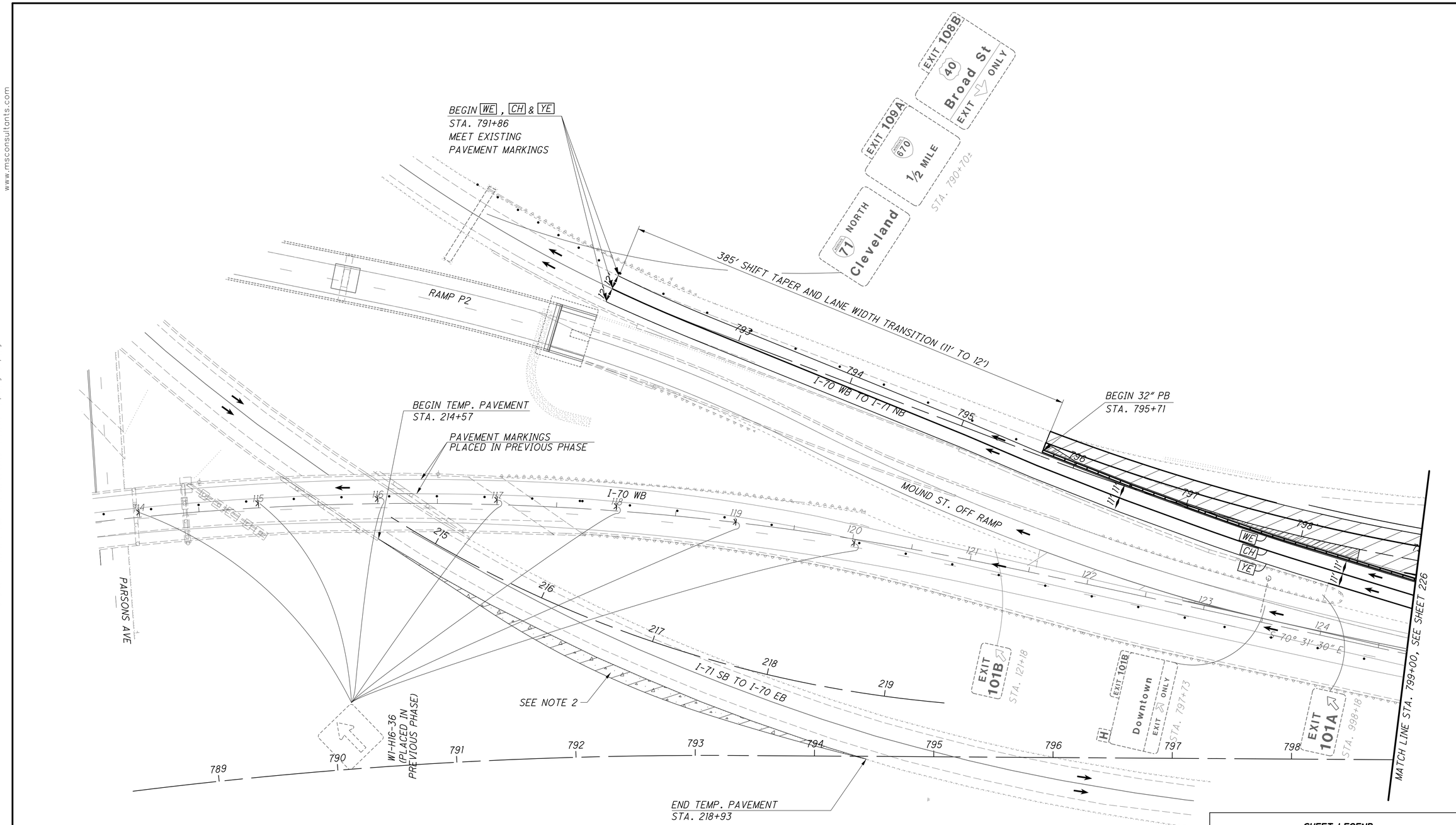

NOTES

1. ALL PAVEMENT MARKINGS ARE EXISTING TO REMAIN OR PLACED IN A PREVIOUS STEP UNLESS OTHERWISE NOTED.

2. INSTALL TEMPORARY PAVEMENT USING A SINGLE LANE CLOSURE PER SCD MT-95.30 AND THE PERMITTED LANE CLOSURE TABLE.

SHEET LEGEND

- TEMPORARY PAVEMENT PLACED PRIOR TO THIS PHASE
- TEMPORARY PAVEMENT PLACED DURING THIS PHASE
- WORK AREA

FOR COMPLETE LEGEND AND DRUM SPACING CHART, SEE SHEET 156

HORIZONTAL SCALE IN FEET 0 20 40 80

CALCULATED JAH
CHECKED JML

MAINTENANCE OF TRAFFIC - PHASE 1C
RAMP P2 & TR-2A

FRA-70-14.54

PLOT.CEL
ms consultants, inc.
msconsultants.com
Ohio DOT Workspace
70\71 East Interchange 2E
www.msconsultants.com
Batchplot Spec: \\msconsultants.com\files\production\03\60\06634_2E\standards\plotdrv\batchplt.spc
Pen Table: \\msconsultants.com\files\Standards\ustn\ohdot\V8i\ms\plotting\pen\V8i_ms_std.tbl
Plot Driver: \\msconsultants.com\files\Standards\ustn\ohdot\v8i\ms\plotting\PDF.pltcfg
34" x 22"
Model: Sheet View: FENCE_VIEW1
Printed: 9/28/2018 @ 10:12:00 AM By: kryan
File: N:\03\60\06634_2E\mot\sheets\105322MP1100.dgn
ms consultants, inc.

PLOT.CEL
ms consultants, inc.
msconsultants.com
www.msconsultants.com
Ohio DOT Workspace
70\71 East Interchange 2E
PDF: ohdot\V8i
DGN: 60-06634_2E_Columbus
Batchplot Spec: \\msconsultants.com\files\production\03\60\06634_2E\standards\plotdir\batchplt.spc
Pen Table: \\msconsultants.com\files\Standards\ustn\ohdot\V8i\ms\plotting\pen\V8i_ms_std.tbl
Plot Driver: \\msconsultants.com\files\Standards\ustn\ohdot\v8i\ms\plotting\PDF.pltcfg
Model: Sheet
Printed: 9/28/2018 @ 10:12:04 AM
File: N:\03\60\06634_2E\mot\sheets\105322MP1101.dgn
View: FENCE_VIEW1
By: kryan
34" x 22"
1"
0.5"
0

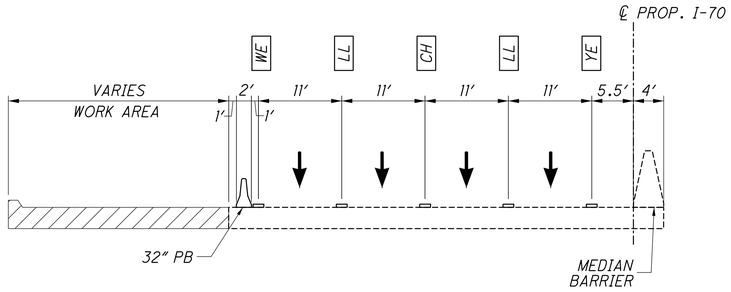

TYPICAL SECTION 08-08
NOT TO SCALE

NOTES

1. ALL PAVEMENT MARKINGS ARE EXISTING TO REMAIN OR PLACED IN A PREVIOUS STEP UNLESS OTHERWISE NOTED.

2. PROVIDE ACCESS POINT IN ACCORDANCE WITH MT-103.10. RELOCATE THE ACCESS POINT, AS NEEDED, WITH THE ENGINEER'S APPROVAL, TO COMPLETE ALL CONSTRUCTION ACTIVITIES.

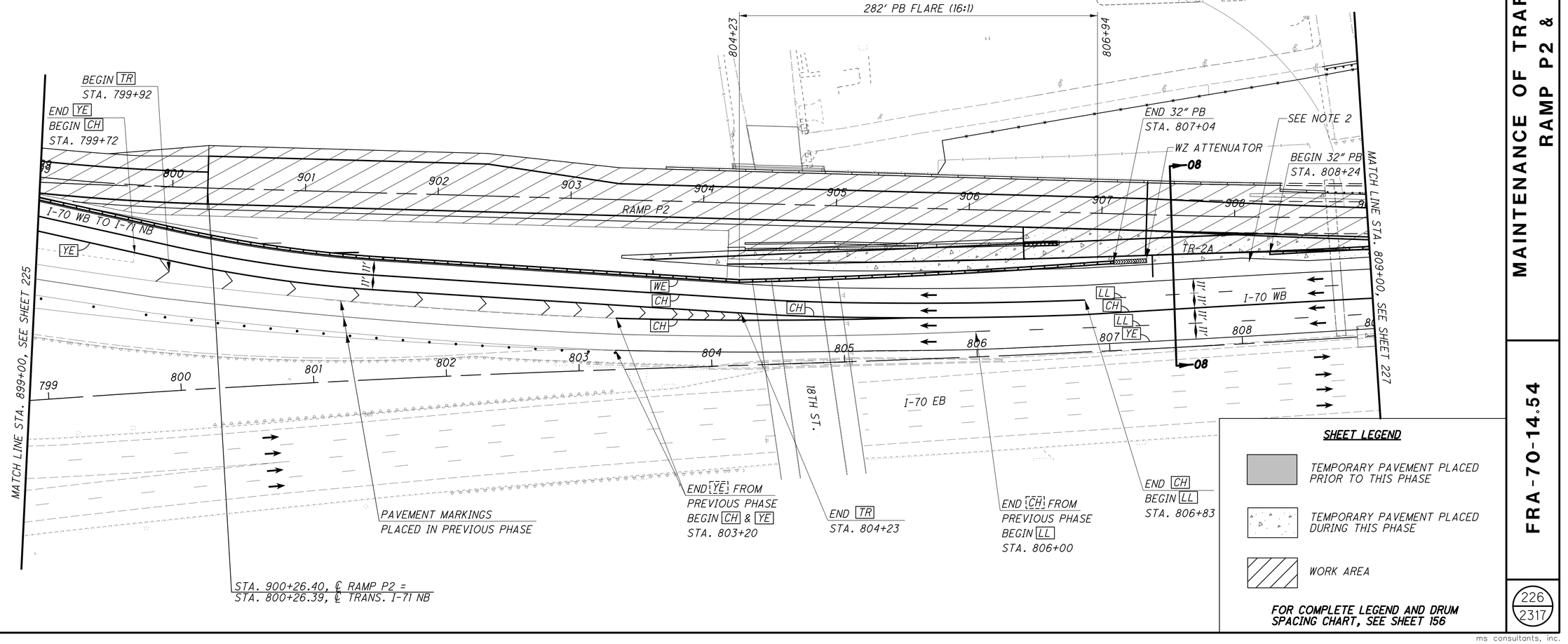

SHEET LEGEND

- TEMPORARY PAVEMENT PLACED PRIOR TO THIS PHASE
- TEMPORARY PAVEMENT PLACED DURING THIS PHASE
- WORK AREA

FOR COMPLETE LEGEND AND DRUM SPACING CHART, SEE SHEET 156

HORIZONTAL SCALE IN FEET
0 20 40 80

CALCULATED JAH
CHECKED JML

MAINTENANCE OF TRAFFIC - PHASE 1C
RAMP P2 & TR-2A

FRA-70-14.54

226
2317

PLOT.CEL

ms consultants, inc.
msconsultants.com

www.msconsultants.com

Ohio DOT Workspace
70\71 East Interchange 2E

Batchplot Spec: \\msconsultants.com\Files\Production\03\60\06634_2E\standards\plotdir\batchplt.spc
Pen Table: \\msconsultants.com\Files\Standards\ustn\ohdot\V8i\ms\plotting\pen\V8i_ms_std.tbl
Plot Driver: \\msconsultants.com\Files\Standards\ustn\ohdot\v8i\ms\plotting\PDF.pltcfg
PDF: ohdot\V8i
PCF: 60-06634_2E_Columbus

Model: Sheet
Printed: 9/28/2018 @ 10:12:07 AM
File: N:\03\60\06634_2E\mot\sheets\105322MP1102.dgn
View: FENCE_VIEW1
By: kryan

34" x 22"

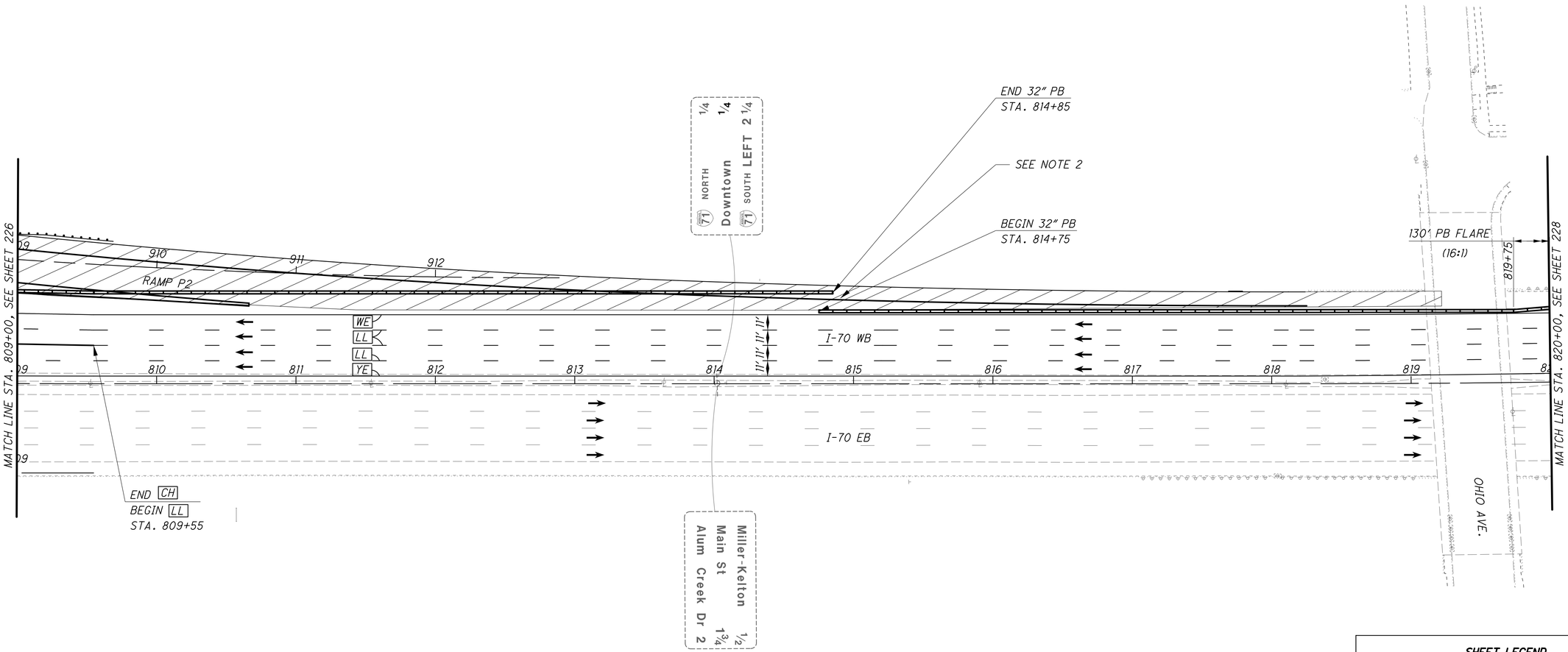

NOTES

1. ALL PAVEMENT MARKINGS ARE EXISTING TO REMAIN OR PLACED IN A PREVIOUS STEP UNLESS OTHERWISE NOTED.

2. PROVIDE ACCESS POINT IN ACCORDANCE WITH MT-103.10. RELOCATE THE ACCESS POINT, AS NEEDED, WITH THE ENGINEER'S APPROVAL, TO COMPLETE ALL CONSTRUCTION ACTIVITIES.

SHEET LEGEND

- TEMPORARY PAVEMENT PLACED PRIOR TO THIS PHASE
- TEMPORARY PAVEMENT PLACED DURING THIS PHASE
- WORK AREA

FOR COMPLETE LEGEND AND DRUM SPACING CHART, SEE SHEET 156

HORIZONTAL SCALE IN FEET
0 20 40 80

CALCULATED JAH
CHECKED JML

MAINTENANCE OF TRAFFIC - PHASE 1C
RAMP P2 & TR-2A

FRA-70-14.54

ms consultants, inc.

PLOT.CEL
ms consultants, inc.
msconsultants.com
www.msconsultants.com

Batchplot Spec: \\msconsultants.com\files\production\03\60\06634.2E\standards\plotdr\batchplt.spc
Pen Table: \\msconsultants.com\files\Standards\ustn\ohdot\V8i\ms\plotting\pen\V8i_ms_std.tbl
Plot Driver: \\msconsultants.com\files\Standards\ustn\ohdot\V8i\ms\plotting\PDF.pltcfg
PCF: ohdotV8i
PCF: 60-06634_2E_Columbus
Ohio DOT Workspace
70\71 East Interchange 2E
Model: Sheet
Printed: 9/28/2018 @ 10:12:09 AM
File: N:\03\60\06634_2E\mot\Sheets\105322MP1103.dgn
View: FENCE_VIEW1
By: kryan
34" x 22"

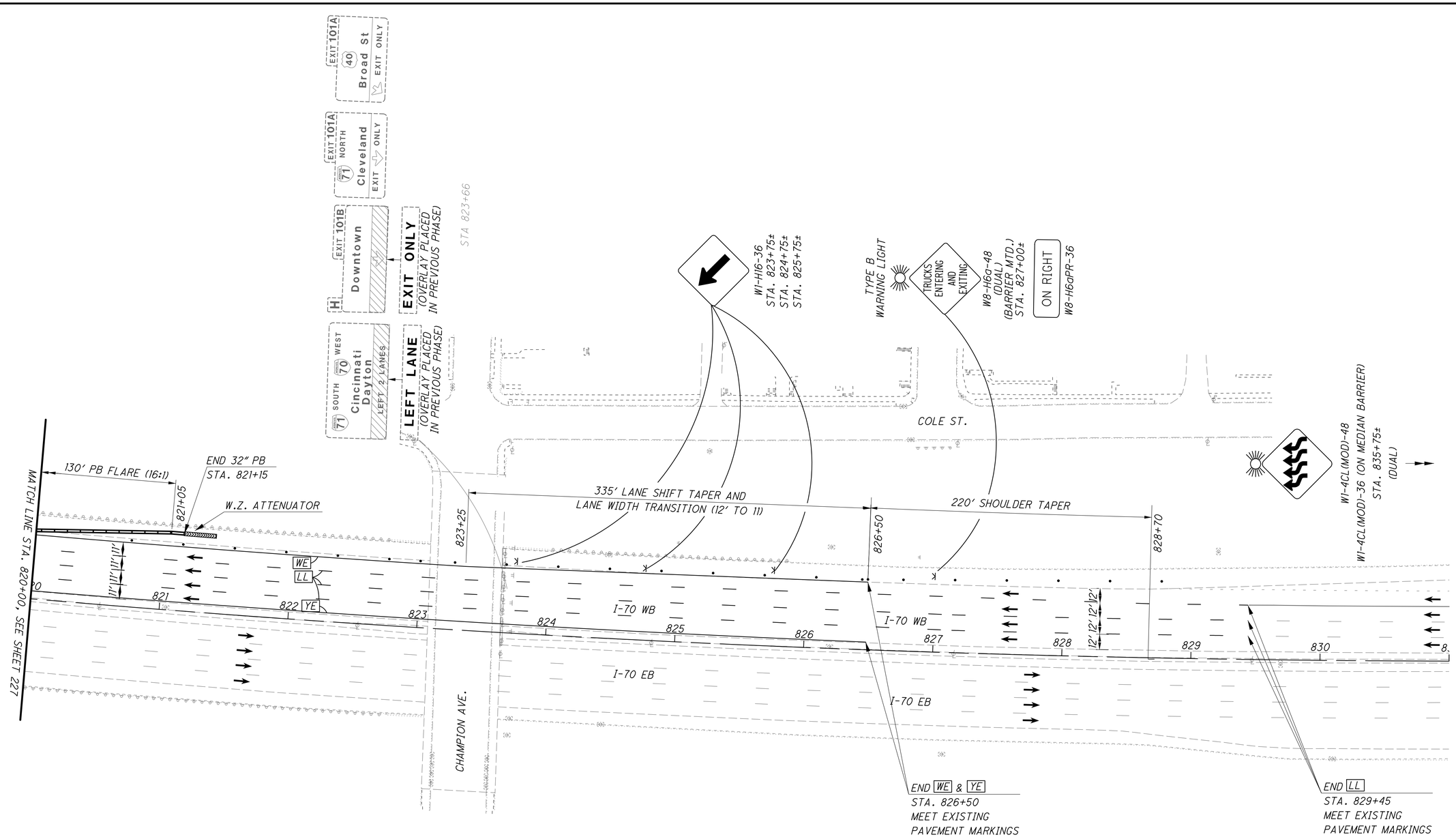

NOTES

1. ALL PAVEMENT MARKINGS ARE EXISTING TO REMAIN OR PLACED IN A PREVIOUS STEP UNLESS OTHERWISE NOTED.

SHEET LEGEND

- TEMPORARY PAVEMENT PLACED PRIOR TO THIS PHASE
- TEMPORARY PAVEMENT PLACED DURING THIS PHASE
- WORK AREA

FOR COMPLETE LEGEND AND DRUM SPACING CHART, SEE SHEET 156

CALCULATED JAH
CHECKED JML

0 20 40 80
HORIZONTAL SCALE IN FEET

MAINTENANCE OF TRAFFIC - PHASE 1C
RAMP P2 & TR-2A

FRA-70-14.54

228
2317

ms consultants, inc.

PLOT.CEL
ms consultants, inc.
msconsultants.com
www.msconsultants.com
Ohio DOT Workspace
70\71 East Interchange 2E
Batchplot Spec: \\msconsultants.com\files\production\03\60\06634_2E\standards\plotdrv\batchplt.spc UCF: ohdotV8i
Pen Table: \\msconsultants.com\files\Standards\ustn\ohdot\V8i\ms\plotting\pen\V8i_ms_std.tbl PCF: 60-06634_2E_Columbus
Plot Driver: \\msconsultants.com\files\Standards\ustn\ohdot\v8i\ms\plotting\PDF.pltcfg
34'' x 22''
Model: Sheet View: FENCE_VIEW1
Printed: 9/28/2018 @ 10:13:04 AM By: kryan
File: \\msconsultants.com\files\Production\03\60\06634_2E\mot\sheets\105322MH002.dgn

HORIZONTAL SCALE IN FEET
0 10 20 40

CALCULATED
CHECKED

MANTENANCE OF TRAFFIC - PHASE 1C
TEMPORARY DRAINAGE INSTALLATION

FRA-70-14.54

228A
2317

ms consultants, inc.

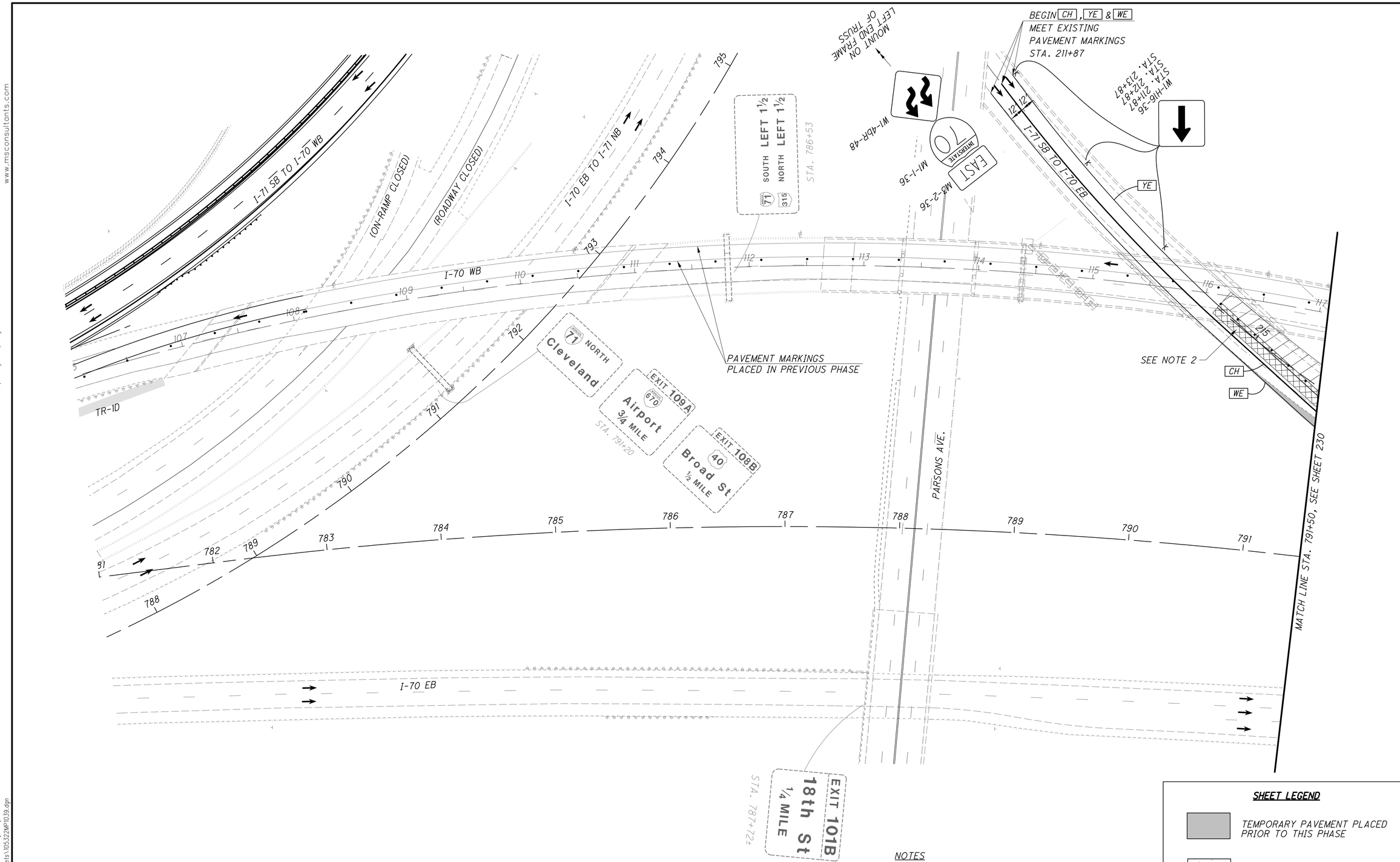

NOTES

1. ALL PAVEMENT MARKINGS ARE EXISTING TO REMAIN OR PLACED IN A PREVIOUS STEP UNLESS OTHERWISE NOTED.

2. CLOSE THE LEFT LANE DURING NON-PEAK HOURS (11PM-5AM DAILY) AND MILL AND RESURFACE THE EXISTING ROADWAY. REOPEN TO TWO LANES AT THE END OF EACH NIGHT.

SHEET LEGEND

- TEMPORARY PAVEMENT PLACED PRIOR TO THIS PHASE
- TEMPORARY PAVEMENT PLACED DURING THIS PHASE
- WORK AREA

FOR COMPLETE LEGEND AND DRUM SPACING CHART, SEE SHEET 156

HORIZONTAL SCALE IN FEET 0 20 40 80

CALCULATED JAH
CHECKED JML

MAINTENANCE OF TRAFFIC - PHASE 1D, STEP 1
TRANS. 1-71 SB(E) & TR-2A

FRA-70-14.54

PLOT.CEL
ms consultants, inc.
msconsultants.com
Ohio DOT Workspace
70\71 East Interchange 2E
www.msconsultants.com
Batchplot Spec: \\msconsultants.com\files\production\03\60\06634_2E\standards\plotdrv\batchplt.spc
Pen Table: \\msconsultants.com\files\Standards\ustn\ohdot\V8i\ms\plotting\pen\V8i_ms_std.tbl
Plot Driver: \\msconsultants.com\files\Standards\ustn\ohdot\V8i\ms\plotting\PDF.pltcfg
34" x 22"
Model: Sheet View: FENCE_VIEW1
Printed: 9/28/2018 @ 10:13:15 AM By: kryan
File: N:\03\60\06634_2E\mot\sheets\105322MP1039.dgn
ms consultants, inc.

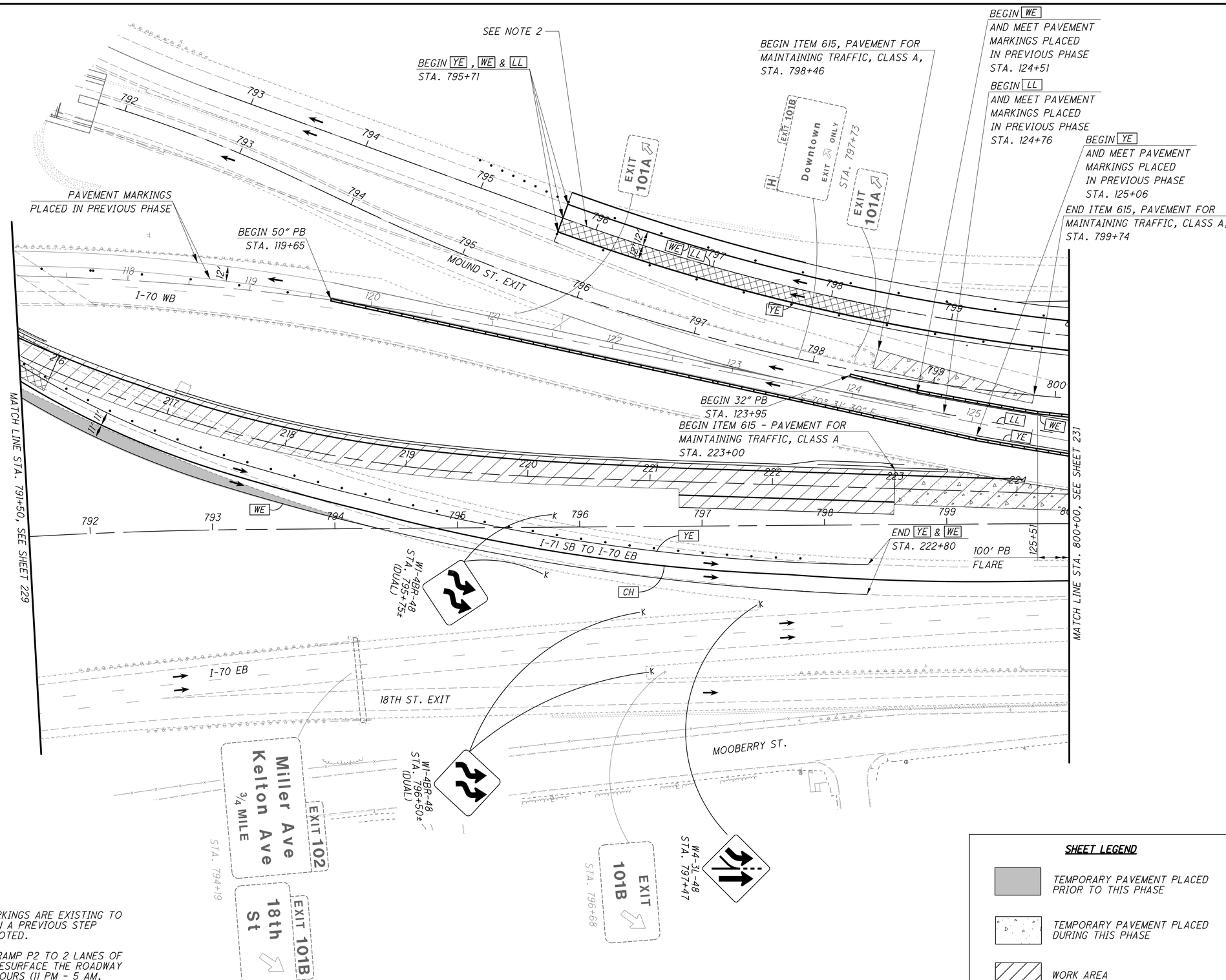

NOTES

1. ALL PAVEMENT MARKINGS ARE EXISTING TO REMAIN OR PLACED IN A PREVIOUS STEP UNLESS OTHERWISE NOTED.

2. BEFORE OPENING RAMP P2 TO 2 LANES OF TRAFFIC, MILL AND RESURFACE THE ROADWAY DURING ALLOWABLE HOURS (11 PM - 5 AM, DAILY) USING A SINGLE LANE CLOSURE IN ACCORDANCE WITH MT-95.30.

SHEET LEGEND

- TEMPORARY PAVEMENT PLACED PRIOR TO THIS PHASE
- TEMPORARY PAVEMENT PLACED DURING THIS PHASE
- WORK AREA

FOR COMPLETE LEGEND AND DRUM SPACING CHART, SEE SHEET 156

HORIZONTAL SCALE IN FEET 0 20 40 80

CALCULATED JAH
CHECKED JML

MAINTENANCE OF TRAFFIC - PHASE 1D, STEP 1
TRANS. 1-71 SB(E) & TR-2A

FRA-70-14.54

ms consultants, inc.

PLOT.CEL
ms consultants, inc.
msconsultants.com
Ohio DOT Workspace
70\71 East Interchange 2E
www.msconsultants.com
Batchplot Spec: \\msconsultants.com\files\production\03\60\06634_2E\standards\plotdrv\batchplt.spc
Pen Table: \\msconsultants.com\files\Standards\ustn\ohdot\V8i\ms\plotting\pen\V8i_ms_std.tbl
Plot Driver: \\msconsultants.com\files\Standards\ustn\ohdot\v8i\ms\plotting\PDF.pltcfg
34" x 22"
Model: Sheet
Printed: 9/28/2018 @ 10:13:18 AM
File: N:\03\60\06634_2E\mot\sheets\105322MP1050.dgn
View: FENCE_VIEW1
By: kryan

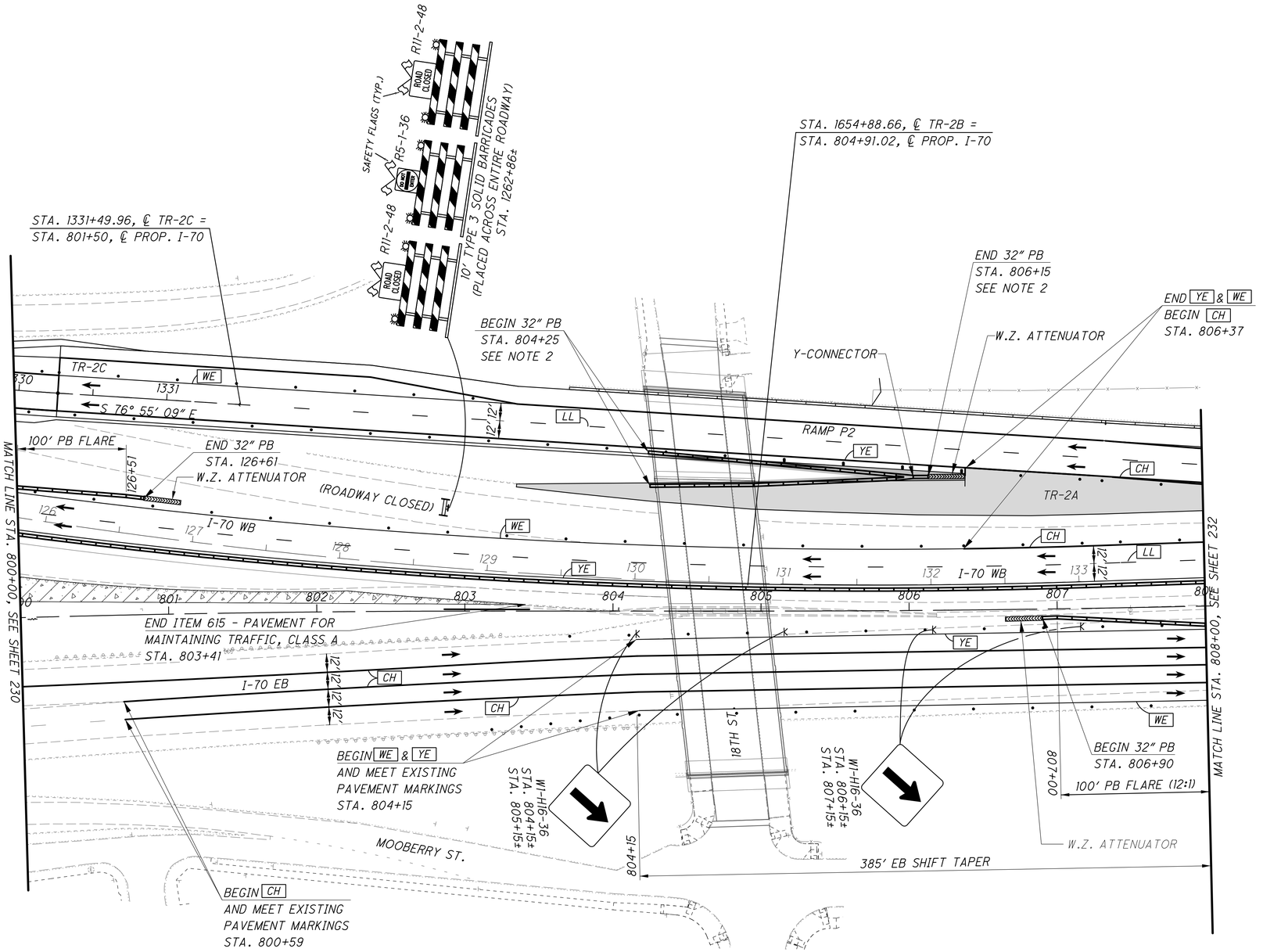

NOTES

1. ALL PAVEMENT MARKINGS ARE EXISTING TO REMAIN OR PLACED IN A PREVIOUS STEP UNLESS OTHERWISE NOTED.

2. INSTALL ADDITIONAL TEMPORARY PAVEMENT AS NECESSARY FOR INSTALLATION OF PORTABLE BARRIER AND WORK ZONE IMPACT ATTENUATOR.

SHEET LEGEND

- TEMPORARY PAVEMENT PLACED PRIOR TO THIS PHASE
- TEMPORARY PAVEMENT PLACED DURING THIS PHASE
- WORK AREA

FOR COMPLETE LEGEND AND DRUM SPACING CHART, SEE SHEET 156

HORIZONTAL SCALE IN FEET 0 20 40 80

CALCULATED JAH
CHECKED JML

MAINTENANCE OF TRAFFIC - PHASE 1D, STEP 1
TRANS. I-71 SB(E) & TR-2A

FRA-70-14.54

ms consultants, inc.

PLOT.CEL
ms consultants, inc.
msconsultants.com
Ohio DOT Workspace
70\71 East Interchange 2E
www.msconsultants.com
Batchplot Spec: \\msconsultants.com\files\production\03\60\06634_2E\standards\plotdrv\batchplt.spc
Pen Table: \\msconsultants.com\files\Standards\ustn\ohdot\V8i\ms\plotting\pen\V8i_ms_std.tbl
Plot Driver: \\msconsultants.com\files\Standards\ustn\ohdot\v8i\ms\plotting\PDF.pltcfg
34" x 22"
Model: Sheet View: FENCE_VIEW1
Printed: 9/28/2018 @ 10:13:24 AM By: kryan
File: N:\03\60\06634_2E\mot\sheets\105322MP1051.dgn

PLOT.CEL

ms consultants, inc.
msconsultants.com

Ohio DOT Workspace
70\71 East Interchange 2E
www.msconsultants.com

0 0.5" 1"

Batchplot Spec: \\msconsultants.com\files\production\03\60\06634_2E\standards\plotdrv\batchplt.spc
Pen Table: \\msconsultants.com\files\Standards\ustn\ohdot\V8i\ms\plotting\pen\V8i_ms_std.tbl
Plot Driver: \\msconsultants.com\files\Standards\ustn\ohdot\v8i\ms\plotting\PDF.pltcfg
PDF: ohdotV8i
PCF: 60-06634_2E_Columbus

Model: Sheet
Printed: 9/28/2018 @ 10:13:26 AM
File: N:\03\60\06634_2E\mot\sheets\105322MP1052.dgn
View FENCE_VIEW1
By: kryan

34" x 22"

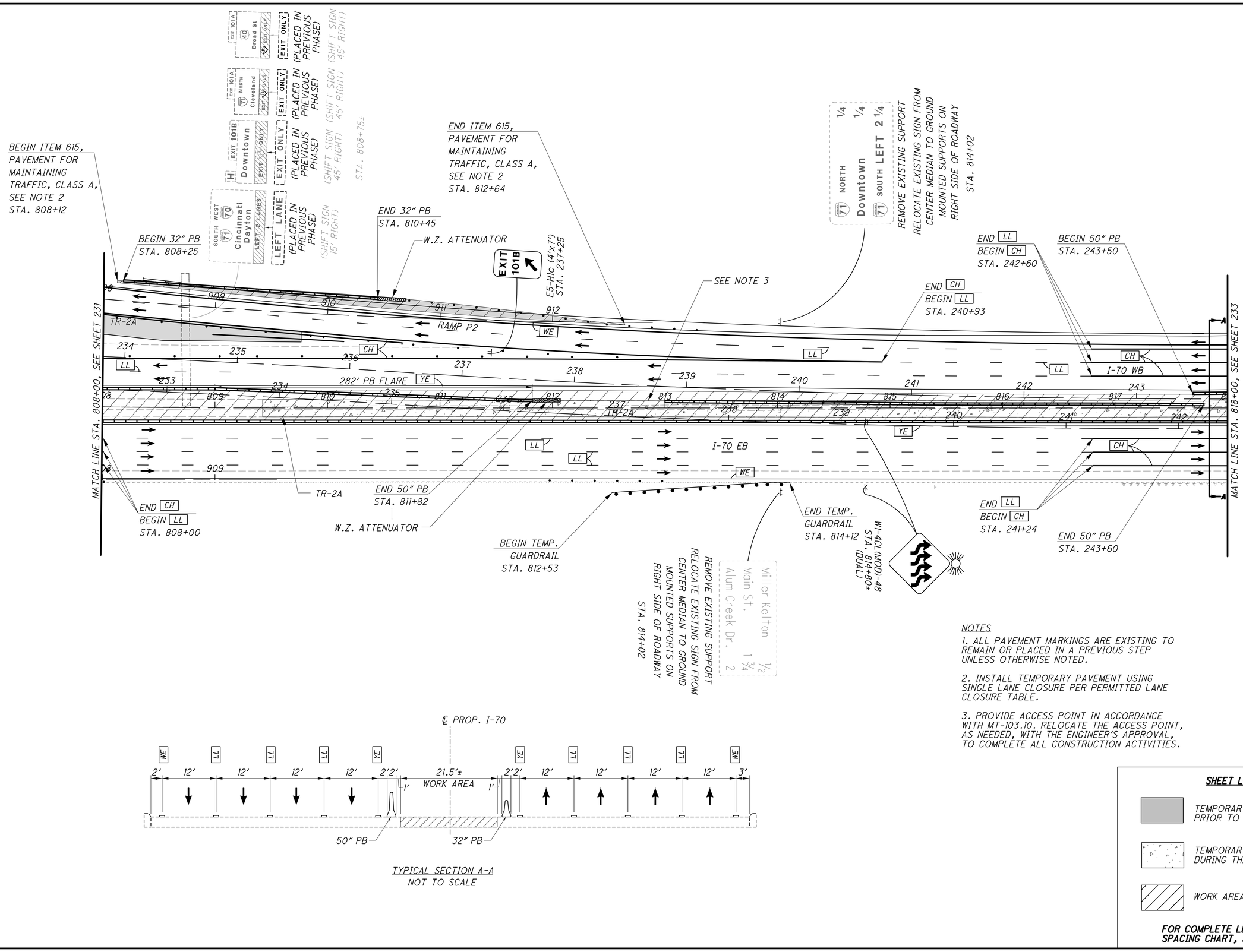

TYPICAL SECTION A-A
NOT TO SCALE

NOTES

1. ALL PAVEMENT MARKINGS ARE EXISTING TO REMAIN OR PLACED IN A PREVIOUS STEP UNLESS OTHERWISE NOTED.

2. INSTALL TEMPORARY PAVEMENT USING SINGLE LANE CLOSURE PER PERMITTED LANE CLOSURE TABLE.

3. PROVIDE ACCESS POINT IN ACCORDANCE WITH MT-103.10. RELOCATE THE ACCESS POINT, AS NEEDED, WITH THE ENGINEER'S APPROVAL, TO COMPLETE ALL CONSTRUCTION ACTIVITIES.

SHEET LEGEND

- TEMPORARY PAVEMENT PLACED PRIOR TO THIS PHASE
- TEMPORARY PAVEMENT PLACED DURING THIS PHASE
- WORK AREA

FOR COMPLETE LEGEND AND DRUM SPACING CHART, SEE SHEET 156

0 20 40 80 HORIZONTAL SCALE IN FEET

CALCULATED JAH
CHECKED JML

MAINTENANCE OF TRAFFIC - PHASE 1D, STEP 1
TRANS.-71 SB(E) & TR-2A

FRA-70-14.54

232
2317

ms consultants, inc.

PLOT.CEL

ms consultants, inc.
msconsultants.com

www.msconsultants.com

Ohio DOT Workspace
70\71 East Interchange 2E

PCF: ohdot\V8i
PCF: 60-06634_2E_Columbus

Batchplot Spec: \\msconsultants.com\files\production\03\60\06634_2E\standards\plotdir\batchplt.spc
Pen Table: \\msconsultants.com\files\Standards\usth\ohdot\V8i\ms\plotting\pen\V8i_ms_std.tbl
Plot Driver: \\msconsultants.com\files\Standards\usth\ohdot\V8i\ms\plotting\PDF.pltcfg

Model: Sheet View: FENCE_VIEW1
Printed: 9/28/2018 @ 10:13:39 AM By: kryan
File: N:\03\60\06634_2E\mot\sheets\105322MP1053.dgn

34" x 22"

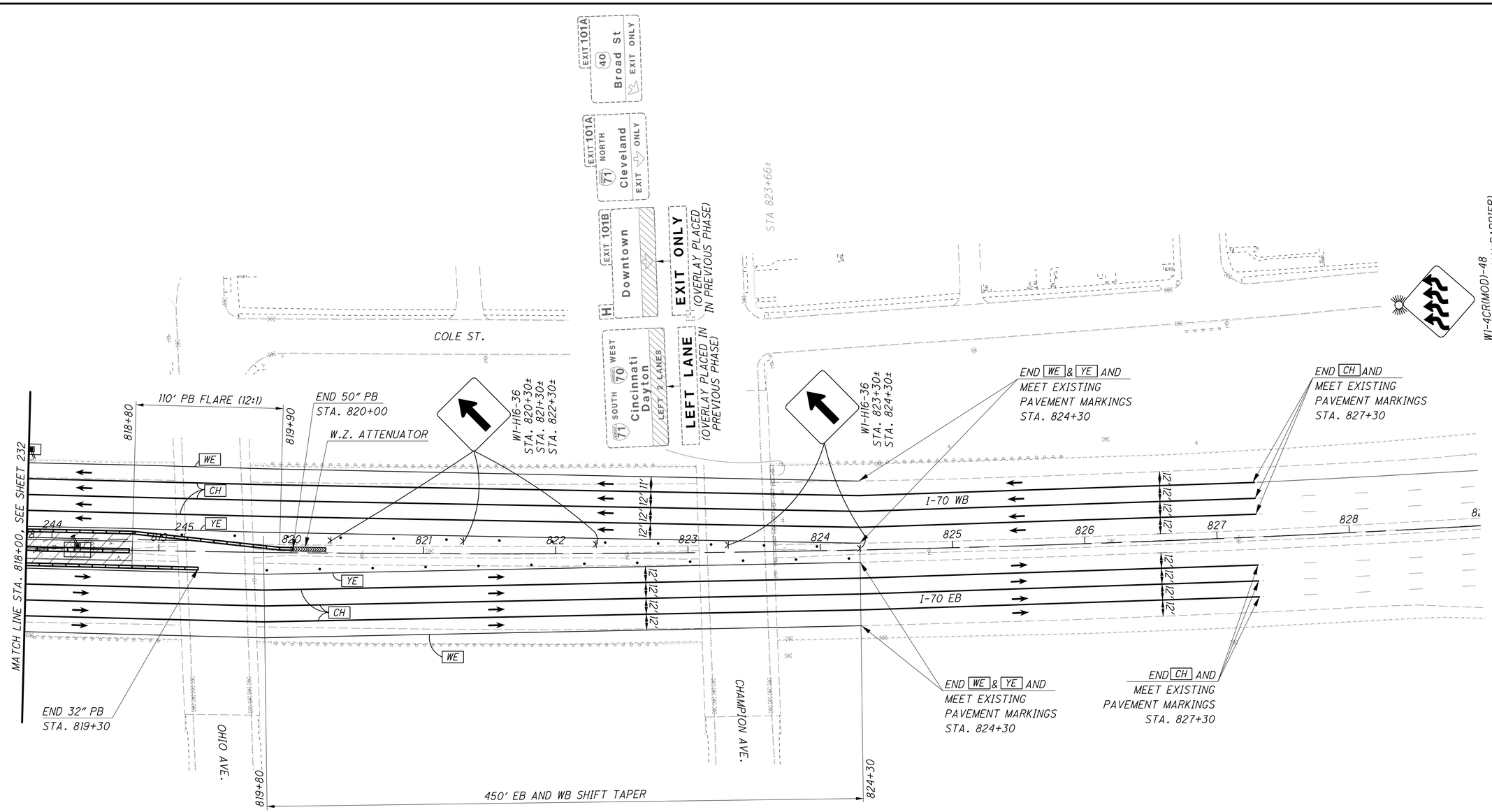

NOTES

1. ALL PAVEMENT MARKINGS ARE EXISTING TO REMAIN OR PLACED IN A PREVIOUS STEP UNLESS OTHERWISE NOTED.

SHEET LEGEND

- TEMPORARY PAVEMENT PLACED PRIOR TO THIS PHASE
- TEMPORARY PAVEMENT PLACED DURING THIS PHASE
- WORK AREA

FOR COMPLETE LEGEND AND DRUM SPACING CHART, SEE SHEET 156

N

0 20 40 80
HORIZONTAL SCALE IN FEET

CALCULATED JAH
CHECKED JML

MAINTENANCE OF TRAFFIC - PHASE 1D, STEP 1
TRANS.I-71 SB(E) & TR-2A

FRA-70-14.54

233
2317

ms consultants, inc.

34" x 22"
Model: Sheet View: FENCE_VIEW1
Printed: 9/28/2018 @ 10:14:02 AM By: kryan
File: \\msconsultants.com\files\Production\03\60\06634_2E\mot\sheets\105322MP1074.dgn
Batchplot Spec: \\msconsultants.com\files\production\03\60\06634_2E\standards\plotdrv\batchplt.spc
Pen Table: \\msconsultants.com\files\Standards\ustn\ohdot\V8i\ms\plotting\pen\V8i_ms_std.tbl
Plot Driver: \\msconsultants.com\files\Standards\ustn\ohdot\v8i\ms\plotting\PDF.pltcfg
PCF: ohdotV8i
PCF: 60-06634_2E_Columbus
Ohio DOT Workspace
70\71 East Interchange 2E
ms consultants, inc.
msconsultants.com
PLOT.CEL
www.msconsultants.com

NEW TRAFFIC PATTERN

USE FOR THE FIRST SEVEN (7) DAYS

PCMS

REMOVE EXISTING PAVEMENT MARKINGS AS PER TC PLAN STA. 655+00

GLENWOOD AVE.

CYPRESS AVE.

N

I-70 EB

I-70 WB

(TRUSS MOUNTED 600'± WEST OF SOUDER AVENUE) STA. 670+75± (AS PER TC PLAN)

(TRUSS MOUNTED AT GORE TO I-71 SOUTH) STA. 681+69± (AS PER TC PLAN)

(ON TRUSS MOUNTED ON BRIDGE OVER S.R. 315) STA. 689+44± (AS PER TC PLAN)

(PLACED ON NEW SIGN TRUSS EAST OF WHITTIER STREET BRIDGE AS PER TRAFFIC CONTROL PLAN) STA. 712+70±

MATCH LINE A-A, SEE SHEET 235

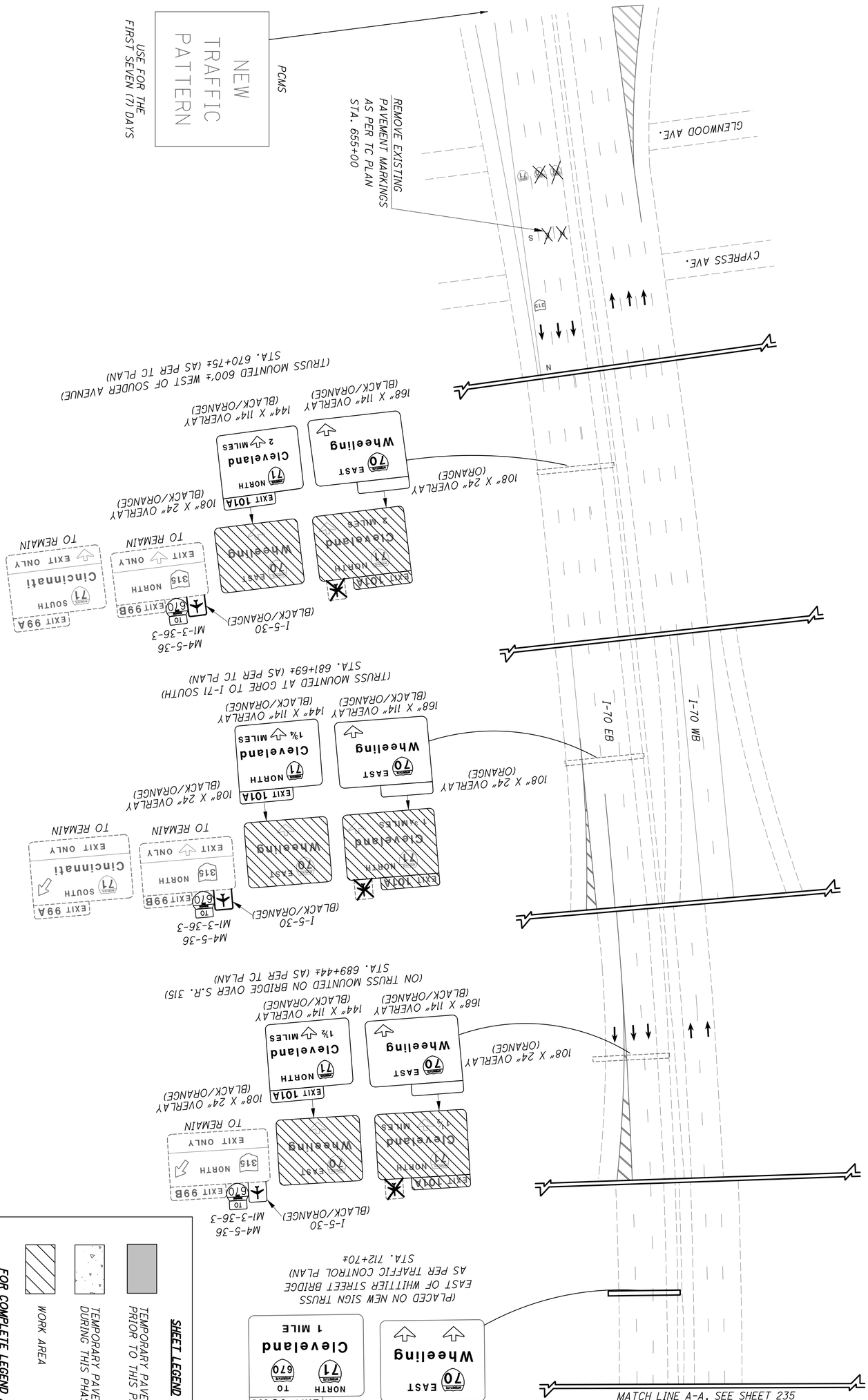

NOTES

1. ALL PAVEMENT MARKINGS ARE EXISTING TO REMAIN OR PLACED IN PREVIOUS STEP UNLESS OTHERWISE NOTED.
2. ALL DOWNWARD ARROWS ON OVERHEAD SIGNS SHALL BE PLACED OVER THE CENTER OF THEIR RESPECTIVE TRAVEL LANE.

SHEET LEGEND

- TEMPORARY PAVEMENT PLACED PRIOR TO THIS PHASE
- TEMPORARY PAVEMENT PLACED DURING THIS PHASE
- WORK AREA

FOR COMPLETE LEGEND AND DRUM SPACING CHART, SEE SHEET 156

234A / 2317	FRA-70-14.54	MAINTENANCE OF TRAFFIC - PHASE 1D, STEP 2 TRANS. I-71 SB(E)	CALCULATED JAH CHECKED JML	0 40 / 20 80 HORIZONTAL SCALE IN FEET	N

ms consultants, inc.

34" x 22"
Model: Sheet View: FENCE_VIEW1
Printed: 9/28/2018 @ 10:14:18 AM By: kryan
File: \\msconsultants.com\files\Production\03\60\06634_2E\mot\sheets\105322MP1075.dgn
Batchplot Spec: \\msconsultants.com\files\production\03\60\06634_2E\standards\plotdrv\batchplt.spc
Pen Table: \\msconsultants.com\files\Standards\ustn\ohdot\V8i\ms\plotting\pen\V8i_ms_std.tbl
Plot Driver: \\msconsultants.com\files\Standards\ustn\ohdot\v8i\ms\plotting\PDF.pltcfg
PCF: ohdotV8i
PCF: 60-06634_2E_Columbus
Ohio DOT Workspace
70\71 East Interchange 2E
www.msconsultants.com
ms consultants, inc.
msconsultants.com
PLOT.CEL

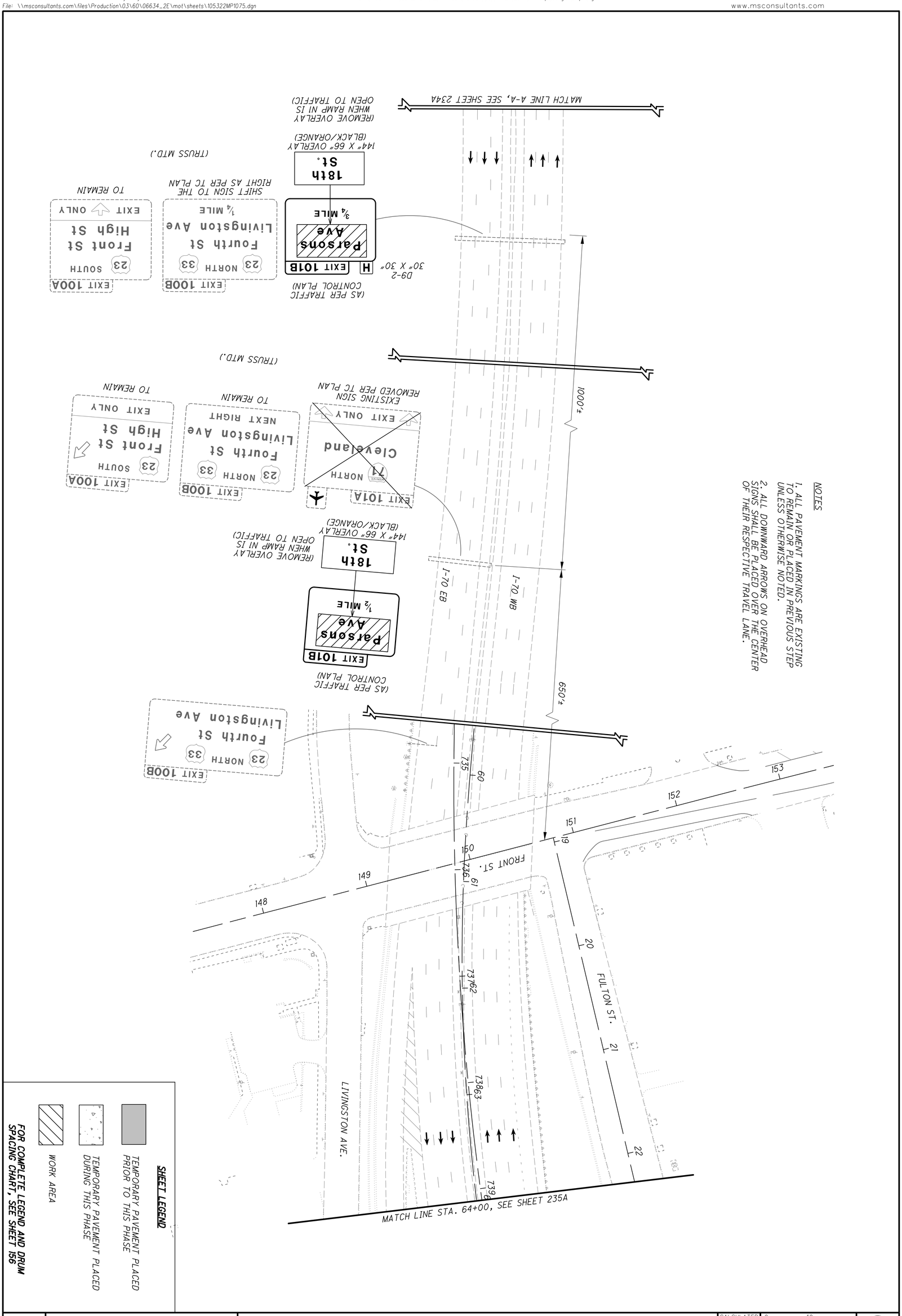

34" x 22"
Model: Sheet View: FENCE_VIEW1
Printed: 9/28/2018 @ 10:14:21 AM By: kryan
File: \\msconsultants.com\files\Production\03\60\06634_2E\mot\sheets\105322MP1054.dgn
Batchplot Spec: \\msconsultants.com\files\production\03\60\06634_2E\standards\plotdrv\batchplt.spc
Pen Table: \\msconsultants.com\files\Standards\ustn\ohdot\V8i\ms\plotting\pen\V8i_ms_std.tbl
Plot Driver: \\msconsultants.com\files\Standards\ustn\ohdot\v8i\ms\plotting\PDF.pltcfg
PCF: ohdotV8i
PCF: 60-06634_2E_Columbus
Ohio DOT Workspace
70\71 East Interchange 2E
www.msconsultants.com
ms consultants, inc.
msconsultants.com
PLOT.CEL

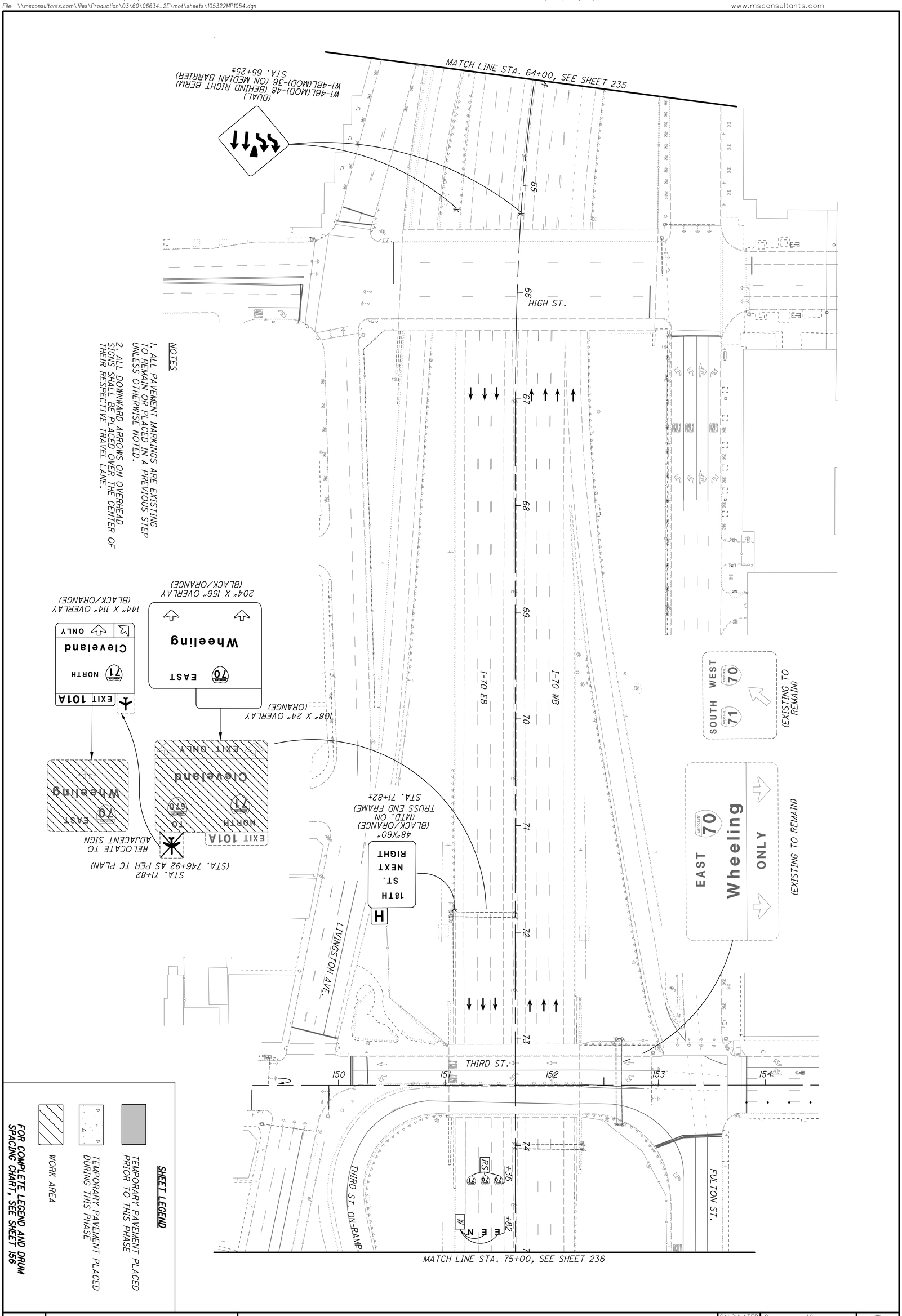

235A / 2317	FRA-70-14.54	MAINTENANCE OF TRAFFIC - PHASE 1D, STEP 2 TRANS. I-71 SB(E)	CALCULATED JAH CHECKED JML	0 20 40 80 HORIZONTAL SCALE IN FEET

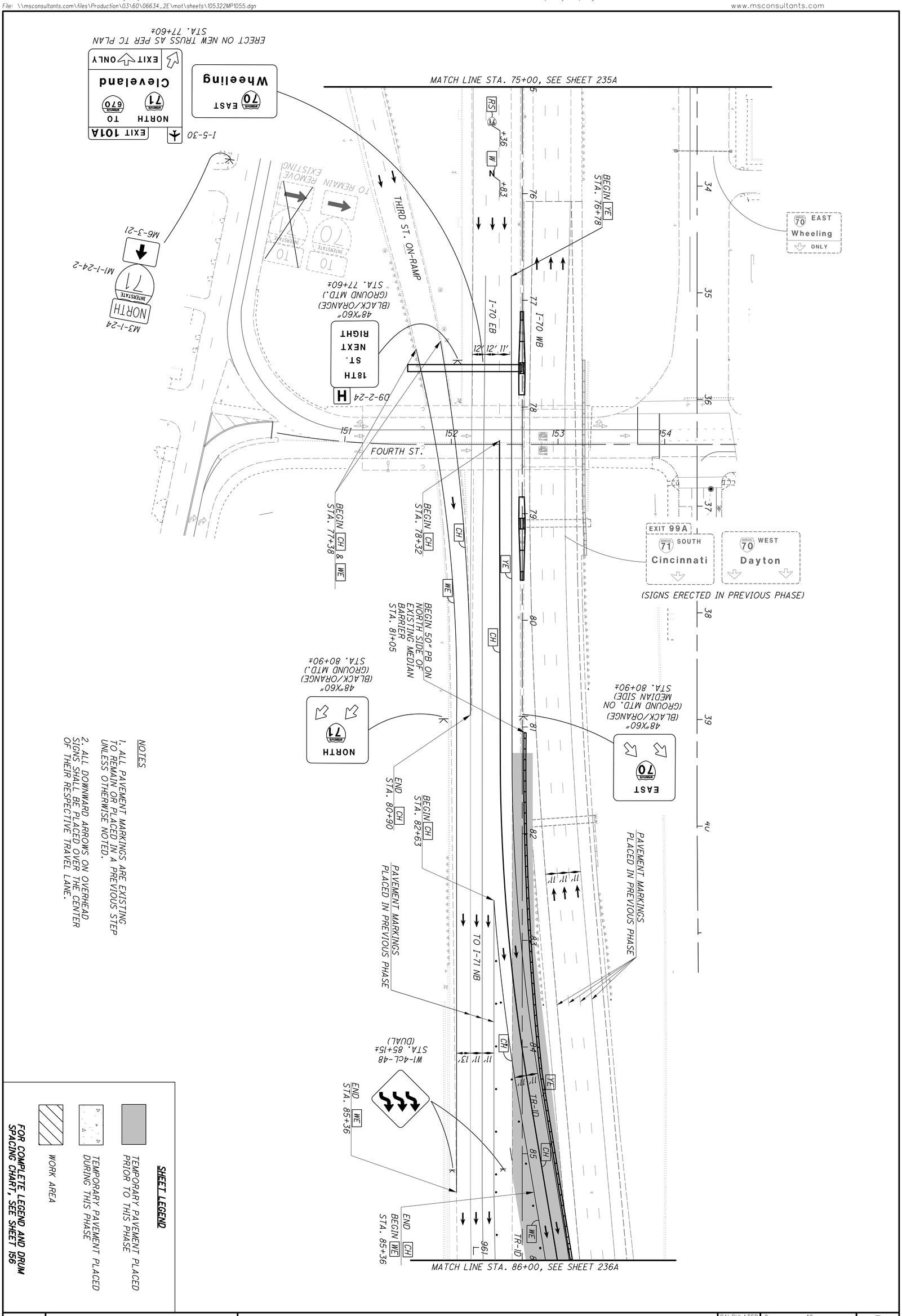
ERECT ON NEW TRUSS AS PER TC PLAN
STA. 77+60±
EXIT 101A
NORTH TO 71 670
Cleveland
EXIT ONLY
I-5-30
EAST 70
Wheeling
MATCH LINE STA. 75+00, SEE SHEET 235A
THIRD ST. ON-RAMP
TO REMAIN
REMOVE EXISTING
M6-3-21
M1-1-24-2
M3-1-24
NORTH 71 INTERSTATE
48"X60" (BLACK/ORANGE) (GROUND MTD.) STA. 77+60±
18TH ST. NEXT RIGHT
D9-2-24
H
I-70 EB
I-70 WB
BEGIN YE STA. 76+78
EAST 70 Wheeling ONLY
FOURTH ST.
BEGIN CH & WE STA. 77+38
BEGIN CH STA. 78+32
EXIT 99A
SOUTH 71 Cincinnati
WEST 70 Dayton
(SIGNS ERECTED IN PREVIOUS PHASE)
BEGIN 50" PB ON NORTH SIDE OF EXISTING MEDIAN BARRIER STA. 81+05
48"X60" (BLACK/ORANGE) (GROUND MTD.) STA. 80+90±
NORTH 71
48"X60" (BLACK/ORANGE) (GROUND MTD. ON MEDIAN SIDE) STA. 80+90±
EAST 70
END CH STA. 80+90
BEGIN CH STA. 82+63
PAVEMENT MARKINGS PLACED IN PREVIOUS PHASE
TO I-71 NB
W1-4cL-48 STA. 85+15± (DUAL)
END WE STA. 85+36
END CH BEGIN WE STA. 85+36
TR-1D
MATCH LINE STA. 86+00, SEE SHEET 236A
NOTES
1. ALL PAVEMENT MARKINGS ARE EXISTING TO REMAIN OR PLACED IN A PREVIOUS STEP UNLESS OTHERWISE NOTED.
2. ALL DOWNWARD ARROWS ON OVERHEAD SIGNS SHALL BE PLACED OVER THE CENTER OF THEIR RESPECTIVE TRAVEL LANE.
SHEET LEGEND
TEMPORARY PAVEMENT PLACED PRIOR TO THIS PHASE
TEMPORARY PAVEMENT PLACED DURING THIS PHASE
WORK AREA
FOR COMPLETE LEGEND AND DRUM SPACING CHART, SEE SHEET 156

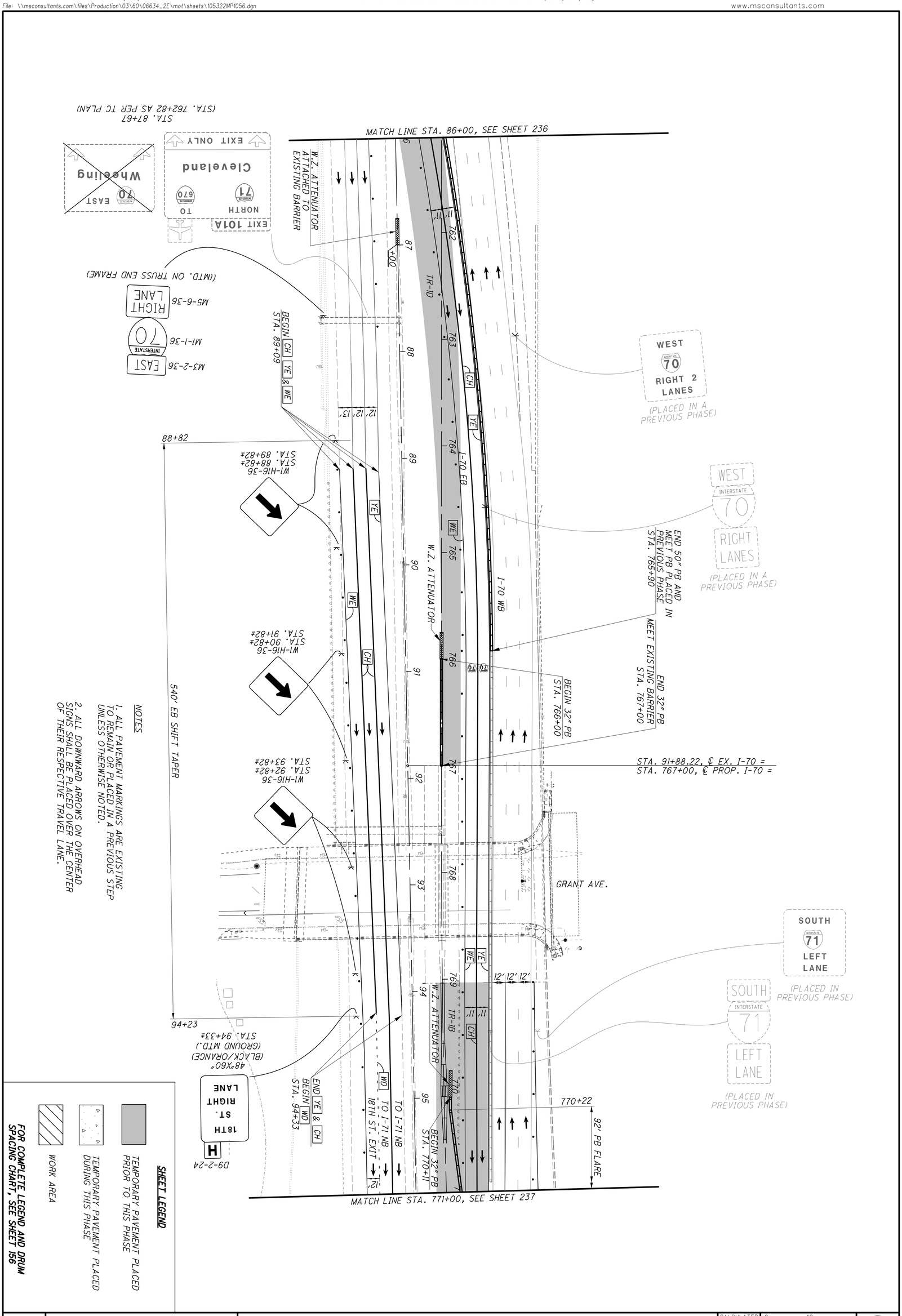

236A / 2317	FRA-70-14.54	MAINTENANCE OF TRAFFIC - PHASE 1D, STEP 2 TRANS. I-71 SB(E)	CALCULATED JAH CHECKED JML	0 20 40 80 HORIZONTAL SCALE IN FEET

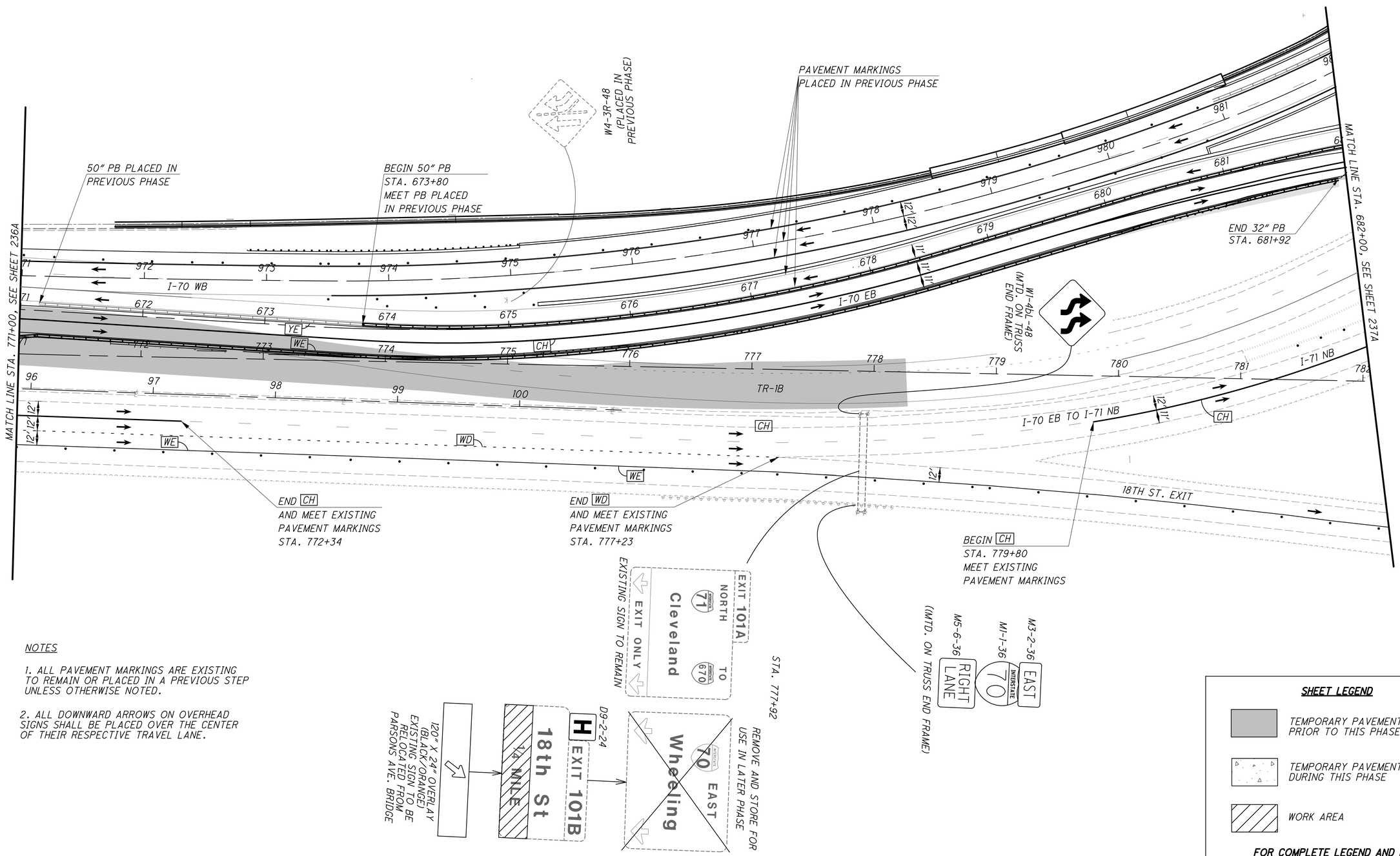

NOTES

1. ALL PAVEMENT MARKINGS ARE EXISTING TO REMAIN OR PLACED IN A PREVIOUS STEP UNLESS OTHERWISE NOTED.

2. ALL DOWNWARD ARROWS ON OVERHEAD SIGNS SHALL BE PLACED OVER THE CENTER OF THEIR RESPECTIVE TRAVEL LANE.

SHEET LEGEND

- TEMPORARY PAVEMENT PLACED PRIOR TO THIS PHASE
- TEMPORARY PAVEMENT PLACED DURING THIS PHASE
- WORK AREA

FOR COMPLETE LEGEND AND DRUM SPACING CHART, SEE SHEET 156

HORIZONTAL SCALE IN FEET 0 20 40 80

CALCULATED JAH
CHECKED JML

MAINTENANCE OF TRAFFIC - PHASE 1D, STEP 2
TRANS. I-71 SB(E)

FRA-70-14.54

ms consultants, inc.

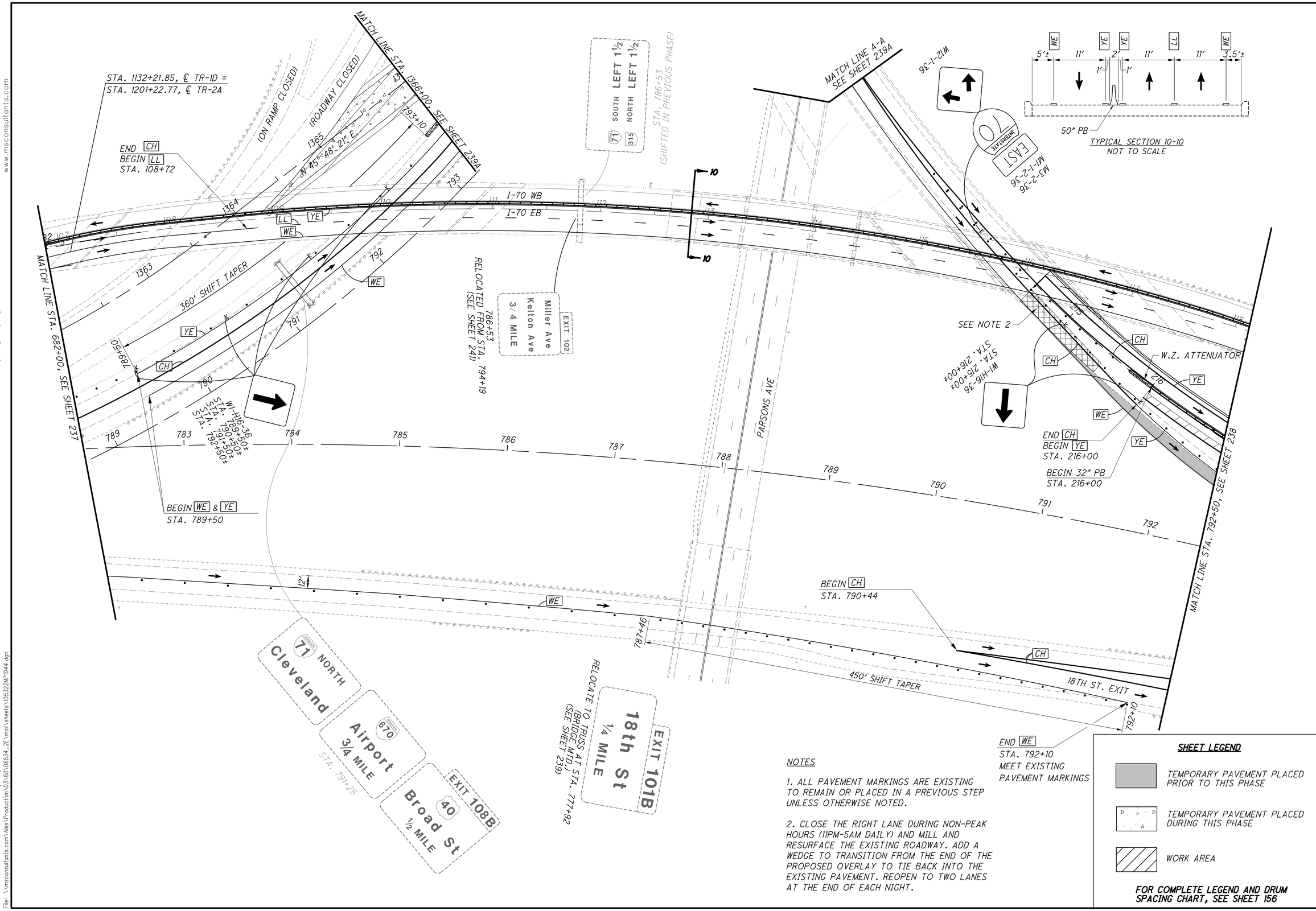

NOTES

1. ALL PAVEMENT MARKINGS ARE EXISTING TO REMAIN OR PLACED IN A PREVIOUS STEP UNLESS OTHERWISE NOTED.

2. CLOSE THE RIGHT LANE DURING NON-PEAK HOURS (11PM-5AM DAILY) AND MILL AND RESURFACE THE EXISTING ROADWAY. ADD A WEDGE TO TRANSITION FROM THE END OF THE PROPOSED OVERLAY TO TIE BACK INTO THE EXISTING PAVEMENT. REOPEN TO TWO LANES AT THE END OF EACH NIGHT.

SHEET LEGEND

- TEMPORARY PAVEMENT PLACED PRIOR TO THIS PHASE
- TEMPORARY PAVEMENT PLACED DURING THIS PHASE
- WORK AREA

FOR COMPLETE LEGEND AND DRUM SPACING CHART, SEE SHEET 156

HORIZONTAL SCALE IN FEET 0 20 40 80

CALCULATED JAH
CHECKED JML

MAINTENANCE OF TRAFFIC - PHASE 1D, STEP 2
TRANS. I-71 SB(E)

FRA-70-14.54

237A
2317

PLOT.CEL
ms consultants, inc.
msconsultants.com
Ohio DOT Workspace
70\71 East Interchange 2E
www.msconsultants.com
Batchplot Spec: \\msconsultants.com\files\production\03\60\06634_2E\standards\plotdrv\batchplt.spc
Pen Table: \\msconsultants.com\files\Standards\ustn\ohdot\V8i\ms\plotting\pen\V8i_ms_std.tbl
Plot Driver: \\msconsultants.com\files\Standards\ustn\ohdot\v8i\ms\plotting\PDF.pltcfg
34" x 22"
Model: Sheet View: FENCE_VIEW1
Printed: 9/28/2018 @ 10:14:38 AM By: kryan
File: \\msconsultants.com\files\Production\03\60\06634_2E\mot\sheets\105322MP1044.dgn
ms consultants, inc.

PLOT.CEL

ms consultants, inc.
msconsultants.com

www.msconsultants.com

Ohio DOT Workspace
70\71 East Interchange 2E

0 0.5" 1"

Batchplot Spec: \\msconsultants.com\files\production\03\60\06634_2E\standards\plotdrv\batchplt.spc
Pen Table: \\msconsultants.com\files\Standards\usth\ohdot\V8i\ms\plotting\pen\V8i_ms_std.tbl PCF: ohdotV8i
Plot Driver: \\msconsultants.com\files\Standards\usth\ohdot\V8i\ms\plotting\PDF.pltcfg PCF: 60-06634_2E_Columbus

Model: Sheet View: FENCE_VIEW1
Printed: 9/28/2018 @ 10:14:41 AM By: kryan
File: \\msconsultants.com\files\Production\03\60\06634_2E\mot\sheets\105322MPT045.dgn

34" x 22"

NOTES

1. ALL PAVEMENT MARKINGS ARE EXISTING TO REMAIN OR PLACED IN A PREVIOUS STEP UNLESS OTHERWISE NOTED.

2. BEFORE OPENING RAMP P2 TO 2 LANES OF TRAFFIC, MILL AND RESURFACE THE ROADWAY DURING ALLOWABLE HOURS (11 PM. - 5 AM. DAILY) USING A SINGLE LANE CLOSURE IN ACCORDANCE WITH MT-95.30.

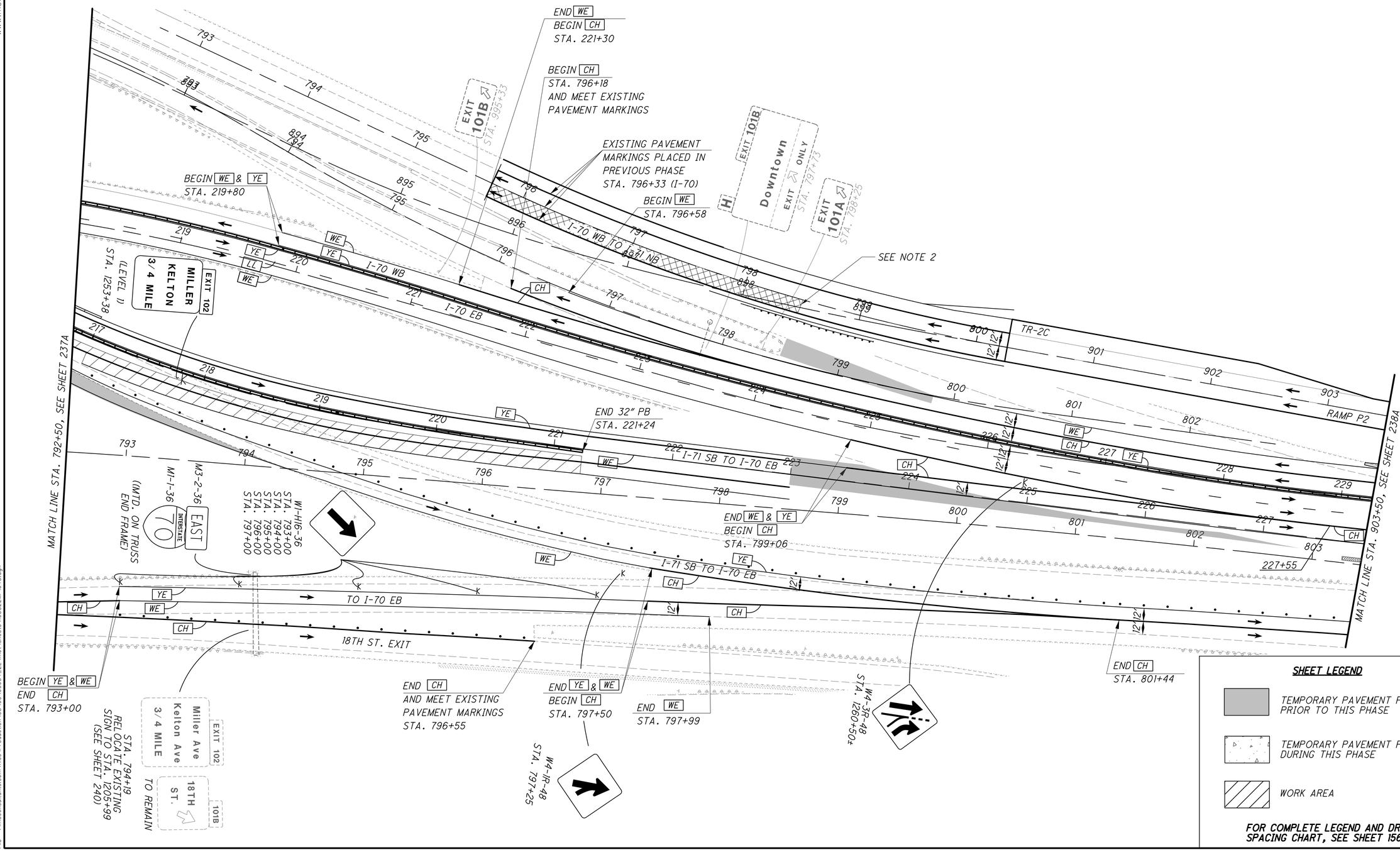

SHEET LEGEND

- TEMPORARY PAVEMENT PLACED PRIOR TO THIS PHASE
- TEMPORARY PAVEMENT PLACED DURING THIS PHASE
- WORK AREA

FOR COMPLETE LEGEND AND DRUM SPACING CHART, SEE SHEET 156

HORIZONTAL SCALE IN FEET
0 20 40 80

CALCULATED JAH
CHECKED JML

MAINTENANCE OF TRAFFIC - PHASE 1D, STEP 2
TRANS.I-71 SB(E)

FRA-70-14.54

238
2317

ms consultants, inc.

34" x 22"
Model: Sheet View: FENCE_VIEW1
Printed: 9/28/2018 @ 10:14:44 AM By: kryan
File: \\msconsultants.com\files\Production\03\60\06634_2E\mot\sheets\105322MP1046.dgn
Batchplot Spec: \\msconsultants.com\files\production\03\60\06634_2E\standards\plotdrv\batchplt.spc
Pen Table: \\msconsultants.com\files\Standards\ustn\ohdot\V8i\ms\plotting\pen\V8i_ms_std.tbl
Plot Driver: \\msconsultants.com\files\Standards\ustn\ohdot\v8i\ms\plotting\PDF.pltcfg
PCF: ohdotV8i
PCF: 60-06634_2E_Columbus
Ohio DOT Workspace
70\71 East Interchange 2E
ms consultants, inc.
msconsultants.com
PLOT.CEL
www.msconsultants.com

MATCH LINE STA. 903+50, SEE SHEET 238

BEGIN 32" PB STA. 803+50

END CH STA. 804+15

W1-4CR-48 STA. 1264+27±

FLASING ARROW PANEL TYPE 'C' STA. 804+40

32" PB PLACED IN PREVIOUS PHASE

18TH ST.

END 32" PB STA. 804+50

I-70 WB TO I-71 NB (RAMP P2)

TR-2A

END LL BEGIN CH STA. 805+73

END YE & WE BEGIN CH STA. 906+41

BEGIN WE & CH STA. 907+34

495' MERGE TAPER

END WE BEGIN CH STA. 805+73

I-70 EB

I-70 WB

END YE BEGIN CH STA. 809+08

PB PLACED IN PREVIOUS PHASE

665' EB & WB SHIFT TAPER

W4-3L-48 STA. 813+00±

32" PB PLACED IN PREVIOUS PHASE

MATCH LINE STA. 814+00, SEE SHEET 239

SOUTH WEST
71 70
Cincinnati Dayton
LEFT 2 LANES
LEFT LANE
(OVERLAY PLACED IN PREVIOUS PHASE)

H EXIT 101B
Downtown
EXIT ONLY
(OVERLAY PLACED IN PREVIOUS PHASE)

EXIT 101 A
71 NORTH
Cleveland
EXIT ONLY
EXIT ONLY
(OVERLAY PLACED IN PREVIOUS PHASE)

EXIT 101 A
40
Broad St
EXIT ONLY
EXIT ONLY
(OVERLAY PLACED IN PREVIOUS PHASE)

SHIFT SIGNS 40' RIGHT
STA. 808+75±

NOTES

1. ALL PAVEMENT MARKINGS ARE EXISTING TO REMAIN OR PLACED IN A PREVIOUS STEP UNLESS OTHERWISE NOTED.
2. ALL DOWNWARD ARROWS ON OVERHEAD SIGNS SHALL BE PLACED OVER THE CENTER OF THEIR RESPECTIVE TRAVEL LANE.

SHEET LEGEND

- TEMPORARY PAVEMENT PLACED PRIOR TO THIS PHASE
- TEMPORARY PAVEMENT PLACED DURING THIS PHASE
- WORK AREA

FOR COMPLETE LEGEND AND DRUM SPACING CHART, SEE SHEET 156

238A
2317

FRA-70-14.54

MAINTENANCE OF TRAFFIC - PHASE 1D, STEP 2
TRANS. I-71 SB(E)

CALCULATED JAH
CHECKED JML

0 40
20 80
HORIZONTAL SCALE IN FEET

ms consultants, inc.

PLOT.CEL

ms consultants, inc.
msconsultants.com

Ohio DOT Workspace
70\71 East Interchange 2E

www.msconsultants.com

0 0.5" 1"

Batchplot Spec: \\msconsultants.com\files\production\03\60\06634_2E\standards\plotdrv\batchplt.spc PDF: ohdot1V8i
Pen Table: \\msconsultants.com\files\Standards\usth\ohdot\V8i\ms\plotting\pen\V8i_ms_std.tbl PCF: 60-06634_2E_Columbus
Plot Driver: \\msconsultants.com\files\Standards\usth\ohdot\v8i\ms\plotting\PDF.pltcfg

34" x 22"

Model: Sheet View: FENCE_VIEW1
Printed: 9/28/2018 @ 10:14:49 AM By: kryan
File: \\msconsultants.com\files\Production\03\60\06634_2E\mot\sheets\105322MP1047.dgn

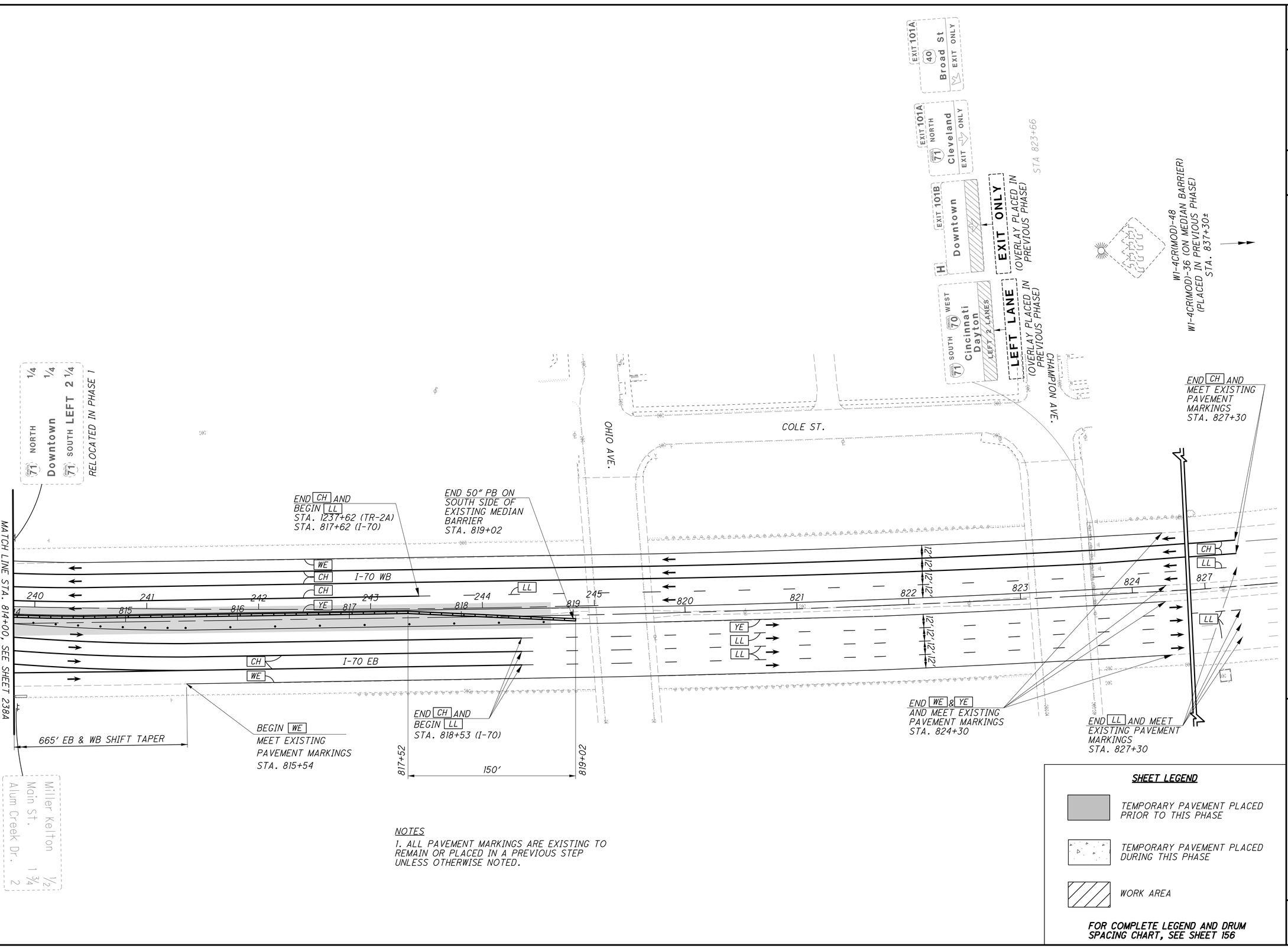

NOTES

1. ALL PAVEMENT MARKINGS ARE EXISTING TO REMAIN OR PLACED IN A PREVIOUS STEP UNLESS OTHERWISE NOTED.

SHEET LEGEND

- TEMPORARY PAVEMENT PLACED PRIOR TO THIS PHASE
- TEMPORARY PAVEMENT PLACED DURING THIS PHASE
- WORK AREA

FOR COMPLETE LEGEND AND DRUM SPACING CHART, SEE SHEET 156

CALCULATED JAH
CHECKED JML

0 20 40 80
HORIZONTAL SCALE IN FEET

MAINTENANCE OF TRAFFIC - PHASE 1D, STEP 2
TRANS. I-71 SB(E)

FRA-70-14.54

239
2317

PLOT.CEL

ms consultants, inc.
msconsultants.com

www.msconsultants.com

Ohio DOT Workspace
70\71 East Interchange 2E

Batchplot Spec: \\msconsultants.com\files\production\03\60\06634_2E\standards\plotdrv\batchplt.spc
Pen Table: \\msconsultants.com\files\Standards\usitn\ohdot\V8i\ms\plotting\pen\V8i_ms_std.tbl
Plot Driver: \\msconsultants.com\files\Standards\usitn\ohdot\V8i\ms\plotting\PDF.prtcfg
PDF: ohdotV8i
PCF: 60-06634_2E_Columbus

Model: Sheet
Printed: 9/28/2018 @ 10:14:52 AM
File: \\msconsultants.com\files\Production\03\60\06634_2E\mot\sheets\105322MP1048.dgn
View: FENCE_VIEW1
By: kryan

34" x 22"

10' TYPE 3 BARRICADES W/ SIGNS PLACED IN PREVIOUS PHASE

PB PLACED IN PREVIOUS PHASE

EAST 70 BOTH USE LANES
990+00± STA. LEVEL MTD GROUND (BLACK/ORANGE)

WEST 70 Dayton

SOUTH 71 Cincinnati

EXIT 107 EAST 70 Wheeling EXIT ONLY

STA. 913+88

W.Z. ATTENUATOR

MAIN ST. OFF-RAMP

(ROADWAY CLOSED)

BEGIN 32" PB
STA. 793+40

MATCH LINE STA. 1366+00, SEE SHEET 237A

TR-20'

1-70 EB TO I-71 NB

120' PB FLARE (14:1)

W1-H16-36
STA. 987+49±

EXIT 109A 670 ½ MILE

LEVEL 1 (DUAL GROUND MTD.)
STA. 797+33±

W1-H16-36 (PLACED IN PREVIOUS PHASE)

END 32" PB
STA. 797+70

END WE & YE
AND MEET EXISTING PAVEMENT MARKINGS
STA. 991+14

I-71 SB

MAIN ST.

360' NB SHIFT TAPER

W1-H16-36
STA. 798+25±

W1-H16-36
STA. 799+25±
STA. 800+25±

300'±

END CH
AND MEET EXISTING PAVEMENT MARKINGS
STA. 994+30

PARSONS AVE.

MATCH LINE A-A
SEE SHEET 237A

BEGIN CH
MEET EXISTING PAVEMENT MARKINGS

NOTES
1. ALL PAVEMENT MARKINGS ARE EXISTING TO REMAIN OR PLACED IN A PREVIOUS STEP UNLESS OTHERWISE NOTED.

SHEET LEGEND

- TEMPORARY PAVEMENT PLACED PRIOR TO THIS PHASE
- TEMPORARY PAVEMENT PLACED DURING THIS PHASE
- WORK AREA

FOR COMPLETE LEGEND AND DRUM SPACING CHART, SEE SHEET 156

HORIZONTAL SCALE IN FEET
0 20 40 80

CALCULATED JAH
CHECKED JML

MAINTENANCE OF TRAFFIC - PHASE 1D, STEP 2
TRANS.I-71 SB(E)

FRA-70-14.54

239A
2317

ms consultants, inc.

34" x 22"
Model: Sheet View: FENCE_VIEW1
Printed: 9/28/2018 @ 10:14:56 AM By: kryan
File: N:\03\60\06634_2E\mot\sheets\105322MP1058.dgn
Batchplot Spec: \\msconsultants.com\files\production\03\60\06634_2E\standards\plotdrv\batchplt.spf
Pen Table: \\msconsultants.com\files\Standards\ustn\ohdot\V8i\ms\plotting\pen\V8i_ms_std.tbl
Plot Driver: \\msconsultants.com\files\Standards\ustn\ohdot\v8i\ms\plotting\PDF.pltcfg
PCF: ohdotV8i
PCF: 60-06634_2E_Columbus
Ohio DOT Workspace
70\71 East Interchange 2E
ms consultants, inc.
msconsultants.com
PLOT.CEL
www.msconsultants.com

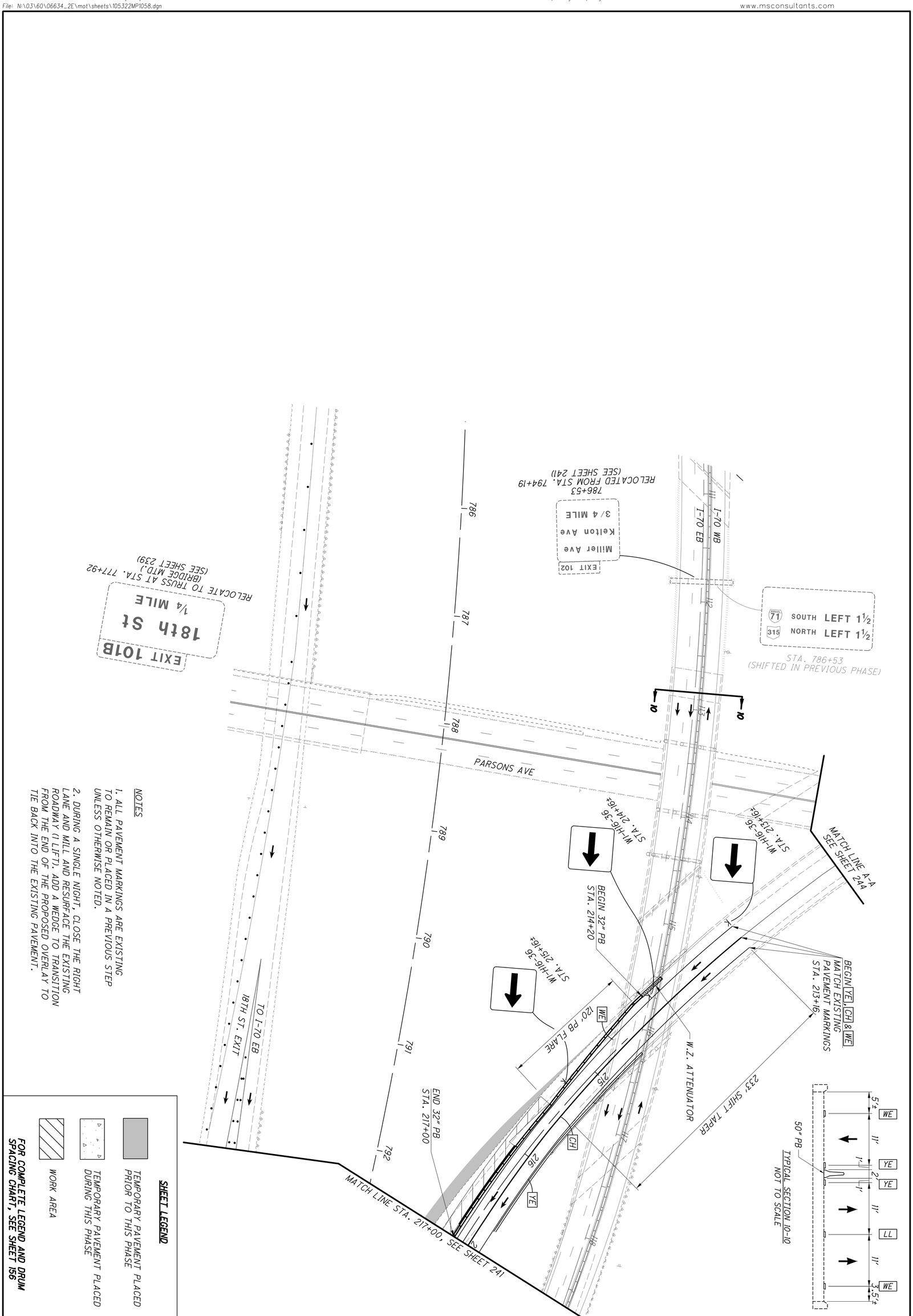

NOTES

1. ALL PAVEMENT MARKINGS ARE EXISTING TO REMAIN OR PLACED IN A PREVIOUS STEP UNLESS OTHERWISE NOTED.

2. DURING A SINGLE NIGHT, CLOSE THE RIGHT LANE AND MILL AND RESURFACE THE EXISTING ROADWAY (1 LIFT). ADD A WEDGE TO TRANSITION FROM THE END OF THE PROPOSED OVERLAY TO TIE BACK INTO THE EXISTING PAVEMENT.

SHEET LEGEND

- TEMPORARY PAVEMENT PLACED PRIOR TO THIS PHASE
- TEMPORARY PAVEMENT PLACED DURING THIS PHASE
- WORK AREA

FOR COMPLETE LEGEND AND DRUM SPACING CHART, SEE SHEET 156

240
2317

FRA-70-14.54

MAINTENANCE OF TRAFFIC - PHASE 1D, STEP 3

TRANS. I-71 SB(E)

CALCULATED JAH
CHECKED JML

HORIZONTAL SCALE IN FEET
0 20 40 80

N

ms consultants, inc.

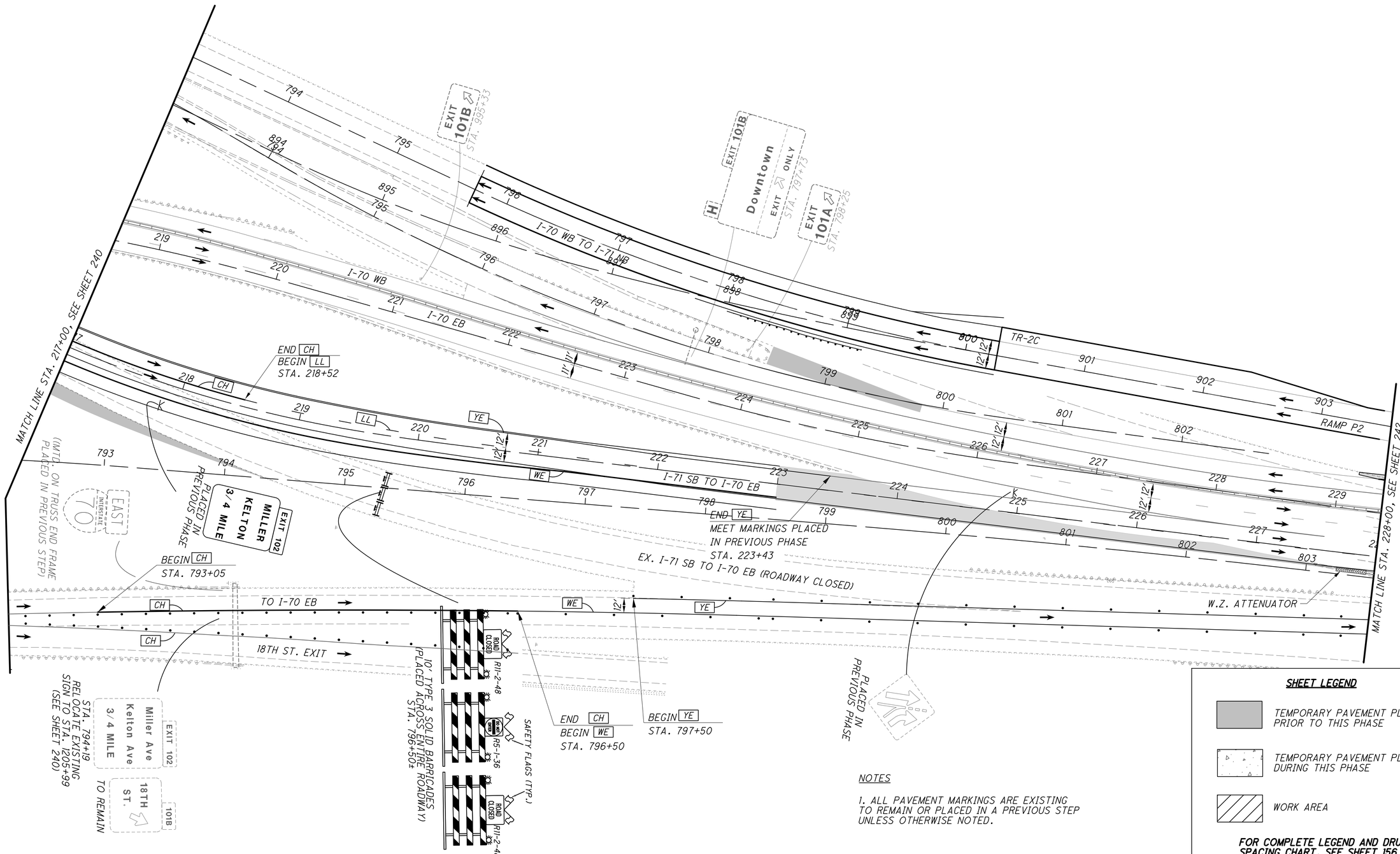

NOTES

1. ALL PAVEMENT MARKINGS ARE EXISTING TO REMAIN OR PLACED IN A PREVIOUS STEP UNLESS OTHERWISE NOTED.

SHEET LEGEND

- TEMPORARY PAVEMENT PLACED PRIOR TO THIS PHASE
- TEMPORARY PAVEMENT PLACED DURING THIS PHASE
- WORK AREA

FOR COMPLETE LEGEND AND DRUM SPACING CHART, SEE SHEET 156

0 20 40 80 HORIZONTAL SCALE IN FEET

CALCULATED JAH
CHECKED JML

MAINTENANCE OF TRAFFIC - PHASE 1D, STEP 3
TRANS. I-71 SB(E)

FRA-70-14.54

PLOT.CEL
ms consultants, inc.
msconsultants.com
Ohio DOT Workspace
70\71 East Interchange 2E
www.msconsultants.com
Batchplot Spec: \\msconsultants.com\files\production\03\60\06634_2E\standards\plotdrv\batchplt.spc
Pen Table: \\msconsultants.com\files\Standards\ustn\ohdot\V8i\ms\plotting\pen\V8i_ms_std.tbl
Plot Driver: \\msconsultants.com\files\Standards\ustn\ohdot\v8i\ms\plotting\PDF.pltcfg
Model: Sheet View: FENCE_VIEW1
Printed: 9/28/2018 @ 10:14:59 AM By: kryan
File: N:\03\60\06634_2E\mot\sheets\105322MP1059.dgn
34" x 22"
ms consultants, inc.

34" x 22"
Model: Sheet View: FENCE_VIEW1
Printed: 9/28/2018 @ 10:15:02 AM By: kryan
File: N:\03\60\06634_2E\mot\sheets\105322MP1060.dgn
Batchplot Spec: \\msconsultants.com\files\production\03\60\06634_2E\standards\plotdrv\batchplt.spc
Pen Table: \\msconsultants.com\files\Standards\ustn\ohdot\V8i\ms\plotting\pen\V8i_ms_std.tbl
Plot Driver: \\msconsultants.com\files\Standards\ustn\ohdot\v8i\ms\plotting\PDF.pltcfg
PCF: ohdotV8i
PCF: 60-06634_2E_Columbus
Ohio DOT Workspace
70\71 East Interchange 2E
www.msconsultants.com
ms consultants, inc.
msconsultants.com
PLOT.CEL

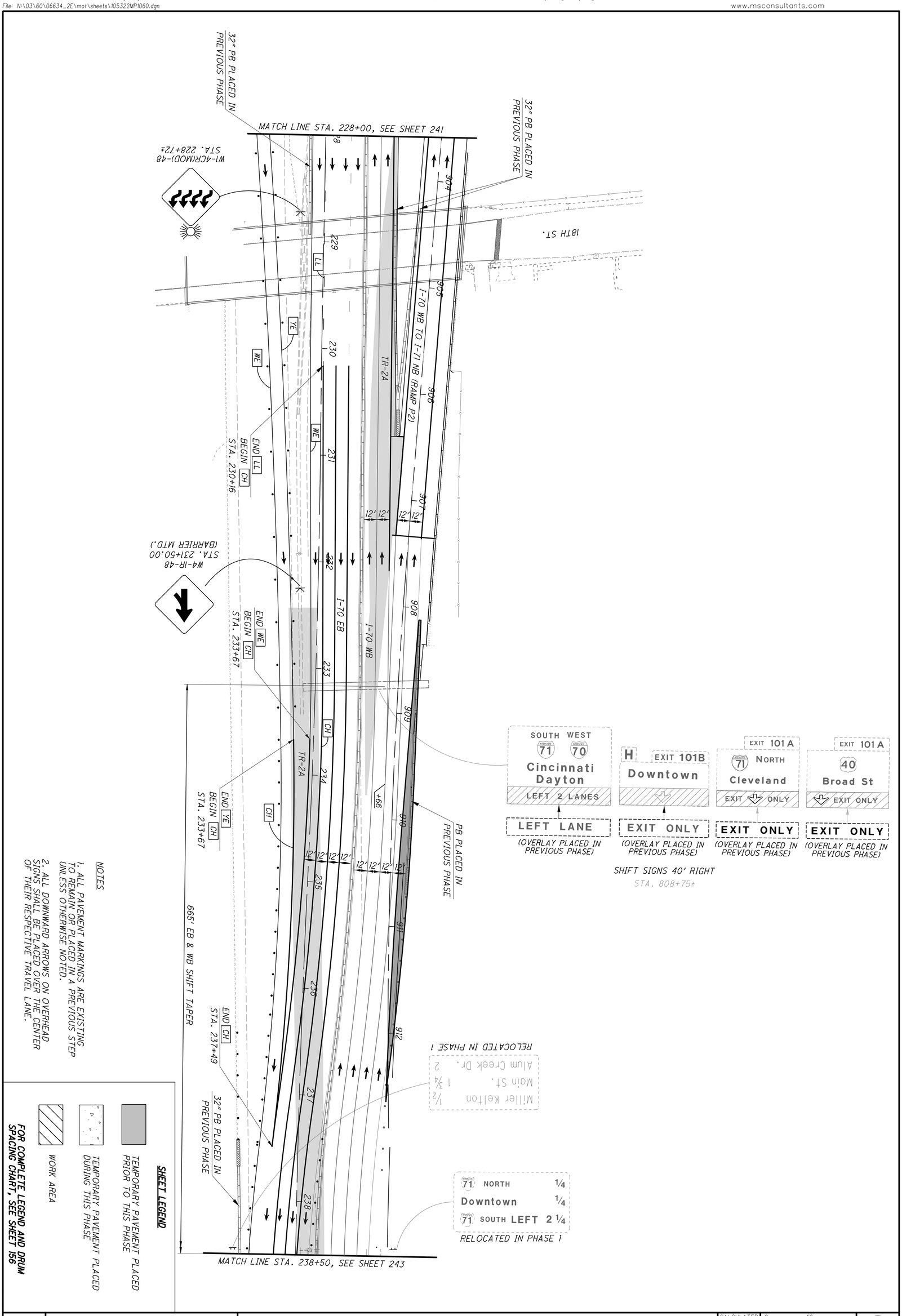

34" x 22"
Model: Sheet View: FENCE_VIEW1
Printed: 9/28/2018 @ 10:15:06 AM By: kryan
File: N:\03\60\06634_2E\mot\sheets\105322MP1061.dgn
Batchplot Spec: \\msconsultants.com\files\production\03\60\06634_2E\standards\plotdrv\batchplt.spc
Pen Table: \\msconsultants.com\files\Standards\ustn\ohdot\V8i\ms\plotting\pen\V8i_ms_std.tbl
Plot Driver: \\msconsultants.com\files\Standards\ustn\ohdot\v8i\ms\plotting\PDF.pltcfg
PCF: ohdotV8i
PCF: 60-06634_2E_Columbus
Ohio DOT Workspace
70\71 East Interchange 2E
ms consultants, inc.
msconsultants.com
PLOT.CEL
www.msconsultants.com

MATCH LINE STA. 238+50, SEE SHEET 242

665' EB & WB SHIFT TAPER

WE

CH

I-70 EB

I-70 WB

TR-2A

LL

239 240 241 242

815 816 817 818 819

817+52

END CH AND MEET MARKINGS PLACED IN PREVIOUS PHASE STA. 818+53

150'

819+02

NOTES

1. ALL PAVEMENT MARKINGS ARE EXISTING TO REMAIN OR PLACED IN A PREVIOUS STEP UNLESS OTHERWISE NOTED.

OHIO AVE.

820 821 822 823 824

12' 12' 12' 12' 12' 12' 12' 12' 12' 12'

END WE AND MEET MARKINGS PLACED IN PREVIOUS PHASE STA. 820+50

COLE ST.

CHAMPION AVE.

SOUTH 71 WEST 70
Cincinnati
Dayton
LEFT 2 LANES

LEFT LANE
(OVERLAY PLACED IN PREVIOUS PHASE)

H EXIT 101B
Downtown

EXIT ONLY
(OVERLAY PLACED IN PREVIOUS PHASE)

EXIT 101A
NORTH 71
Cleveland
EXIT ONLY

EXIT 101A
40
Broad St
EXIT ONLY

STA 823+66

W1-4CR(MOD)-48
W1-4CR(MOD)-36 (ON MEDIAN BARRIER)
(PLACED IN PREVIOUS PHASE)
STA. 837+30±

SHEET LEGEND

TEMPORARY PAVEMENT PLACED PRIOR TO THIS PHASE

TEMPORARY PAVEMENT PLACED DURING THIS PHASE

WORK AREA

FOR COMPLETE LEGEND AND DRUM SPACING CHART, SEE SHEET 156

ms consultants, inc.

243
2317

FRA-70-14.54

MAINTENANCE OF TRAFFIC - PHASE 1D, STEP 3
TRANS. I-71 SB(E)

CALCULATED JAH
CHECKED JML

0 40
20 80
HORIZONTAL SCALE IN FEET

34" x 22"
Model: Sheet View: FENCE_VIEW1
Printed: 9/28/2018 @ 10:15:09 AM By: kryan
File: N:\03\60\06634_2E\mot\sheets\105322MP1082.dgn
Batchplot Spec: \\msconsultants.com\files\production\03\60\06634_2E\standards\plotdrv\batchplt.spc
Pen Table: \\msconsultants.com\files\Standards\ustn\ohdot\V8i\ms\plotting\pen\V8i_ms_std.tbl
Plot Driver: \\msconsultants.com\files\Standards\ustn\ohdot\v8i\ms\plotting\PDF.pltcfg
PCF: ohdotV8i
PCF: 60-06634_2E_Columbus
Ohio DOT Workspace
70\71 East Interchange 2E
ms consultants, inc.
msconsultants.com
PLOT.CEL
www.msconsultants.com

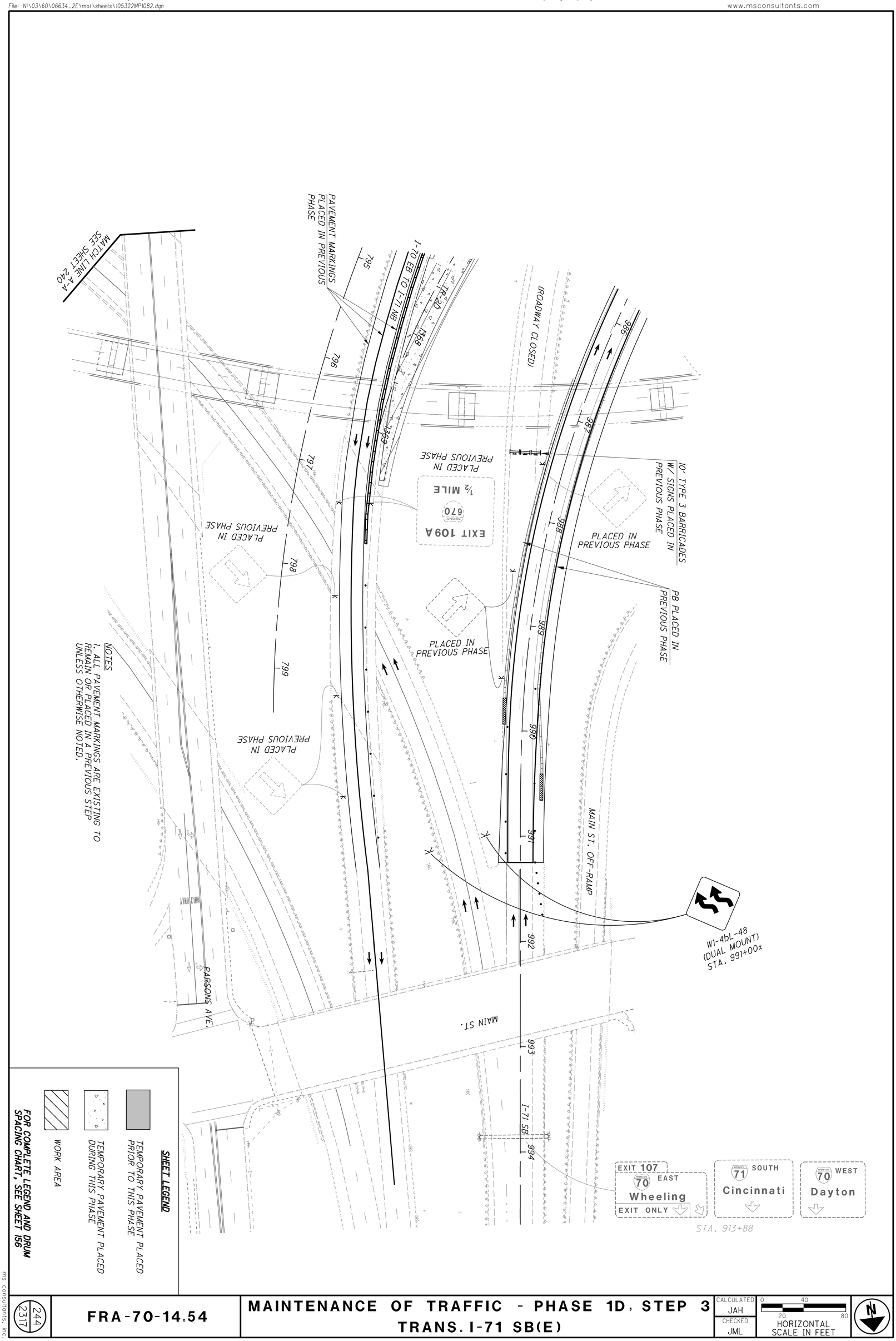

NOTES
1. ALL PAVEMENT MARKINGS ARE EXISTING TO REMAIN OR PLACED IN A PREVIOUS STEP UNLESS OTHERWISE NOTED.

SHEET LEGEND

- TEMPORARY PAVEMENT PLACED PRIOR TO THIS PHASE
- TEMPORARY PAVEMENT PLACED DURING THIS PHASE
- WORK AREA

FOR COMPLETE LEGEND AND DRUM SPACING CHART, SEE SHEET 156

244 / 2317	FRA-70-14.54	MAINTENANCE OF TRAFFIC - PHASE 1D, STEP 3 TRANS. I-71 SB(E)	CALCULATED JAH CHECKED JML	0 40 20 80 HORIZONTAL SCALE IN FEET

ms consultants, inc.

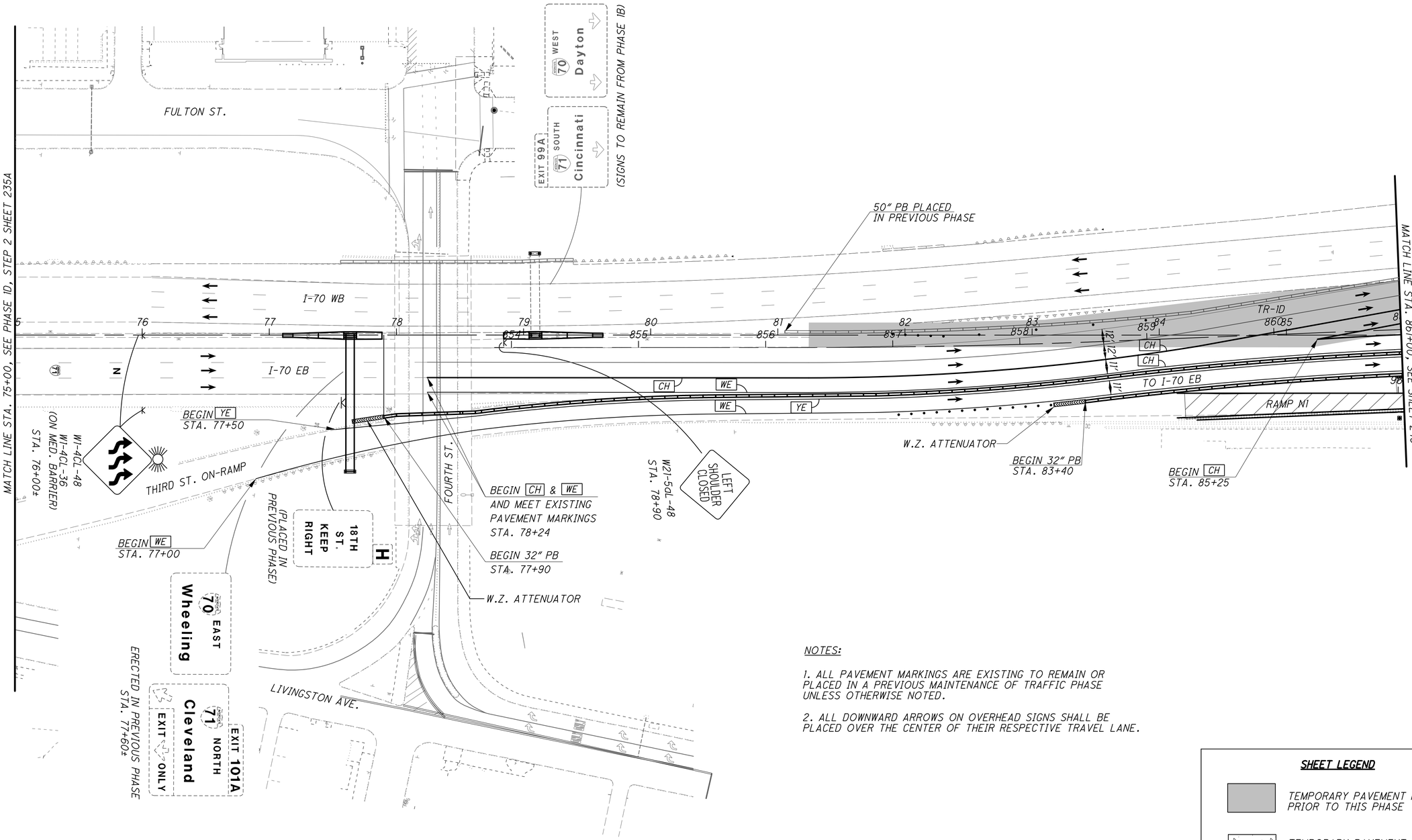

NOTES:

1. ALL PAVEMENT MARKINGS ARE EXISTING TO REMAIN OR PLACED IN A PREVIOUS MAINTENANCE OF TRAFFIC PHASE UNLESS OTHERWISE NOTED.

2. ALL DOWNWARD ARROWS ON OVERHEAD SIGNS SHALL BE PLACED OVER THE CENTER OF THEIR RESPECTIVE TRAVEL LANE.

SHEET LEGEND

- TEMPORARY PAVEMENT PLACED PRIOR TO THIS PHASE
- TEMPORARY PAVEMENT PLACED DURING THIS PHASE
- WORK AREA

FOR COMPLETE LEGEND AND DRUM SPACING CHART, SEE SHEET 156

HORIZONTAL SCALE IN FEET 0 20 40 80

CALCULATED JAH
CHECKED JML

MAINTENANCE OF TRAFFIC - PHASE 1E PARTIAL N1

FRA-70-14.54

ms consultants, inc.

PLOT.CEL
ms consultants, inc.
msconsultants.com
Ohio DOT Workspace
70\71 East Interchange 2E
www.msconsultants.com
Batchplot Spec: \\msconsultants.com\files\production\03\60\06634_2E\standards\plotdrv\batchplt.spc
Pen Table: \\msconsultants.com\files\Standards\ustn\ohdot\V8i\ms\plotting\pen\V8i_ms_std.tbl
Plot Driver: \\msconsultants.com\files\Standards\ustn\ohdot\v8i\ms\plotting\PDF.pltcfg
34" x 22"
Model: Sheet
Printed: 9/28/2018 @ 10:15:13 AM
File: N:\03\60\06634_2E\mot\sheets\105322MP1066.dgn
View: FENCE_VIEW1
By: kryan

PLOT.CEL

ms consultants, inc.
msconsultants.com

www.msconsultants.com

Ohio DOT Workspace
70\71 East Interchange 2E

Batchplot Spec: \\msconsultants.com\files\production\03\60\06634_2E\standards\plotdrv\batchplt.spc
Pen Table: \\msconsultants.com\files\Standards\usitn\ohdot\V8i\ms\plotting\pen\V8i_ms_std.tbl
Plot Driver: \\msconsultants.com\files\Standards\usitn\ohdot\V8i\ms\plotting\PDF.pltcfg
PDF: ohdotV8i
PDF: 60-06634_2E_Columbus

Model: Sheet
Printed: 9/28/2018 @ 10:15:15 AM
File: N:\03\60\06634_2E\mot\sheets\105322MP1067.dgn
View: FENCE_VIEW1
By: kryan

34" x 22"

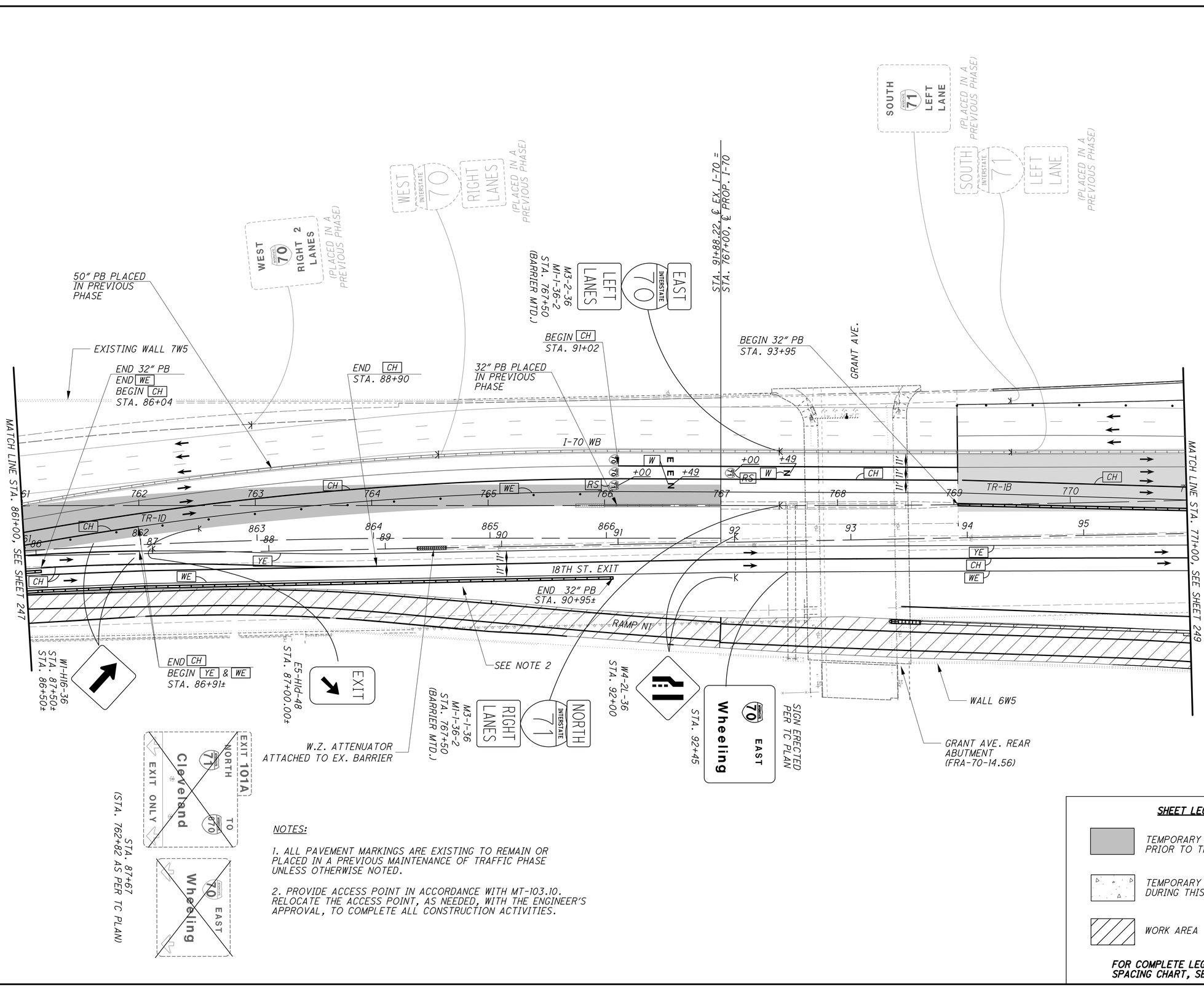

NOTES:

1. ALL PAVEMENT MARKINGS ARE EXISTING TO REMAIN OR PLACED IN A PREVIOUS MAINTENANCE OF TRAFFIC PHASE UNLESS OTHERWISE NOTED.

2. PROVIDE ACCESS POINT IN ACCORDANCE WITH MT-103.10. RELOCATE THE ACCESS POINT, AS NEEDED, WITH THE ENGINEER'S APPROVAL, TO COMPLETE ALL CONSTRUCTION ACTIVITIES.

SHEET LEGEND

- TEMPORARY PAVEMENT PLACED PRIOR TO THIS PHASE
- TEMPORARY PAVEMENT PLACED DURING THIS PHASE
- WORK AREA

FOR COMPLETE LEGEND AND DRUM SPACING CHART, SEE SHEET 156

HORIZONTAL SCALE IN FEET
0 20 40 80

CALCULATED JAH
CHECKED JML

MAINTENANCE OF TRAFFIC - PHASE 1E
PARTIAL N1

FRA-70-14.54

248
2317

ms consultants, inc.

PLOT.CEL

ms consultants, inc.
msconsultants.com

Ohio DOT Workspace
70\71 East Interchange 2E
www.msconsultants.com

1" / 0.5" / 0

Batchplot Spec: \\msconsultants.com\Files\production\03\60\06634.2E\standards\plotdrv\batchplt.spc
Pen Table: \\msconsultants.com\Files\Standards\ustn\ohdot\V8i\ms\plotting\pen\V8i_ms_std.tbl
Plot Driver: \\msconsultants.com\Files\Standards\ustn\ohdot\V8i\ms\plotting\PDF.plt.cfg
PDF: ohdotV8i
PCF: 60-06634_2E_Columbus

34" x 22"

Model: Sheet
Printed: 9/28/2018 @ 10:15:19 AM
File: N:\03\60\06634_2E\mot\sheets\05322MP108.dgn
View: FENCE_VIEW1
By: kryan

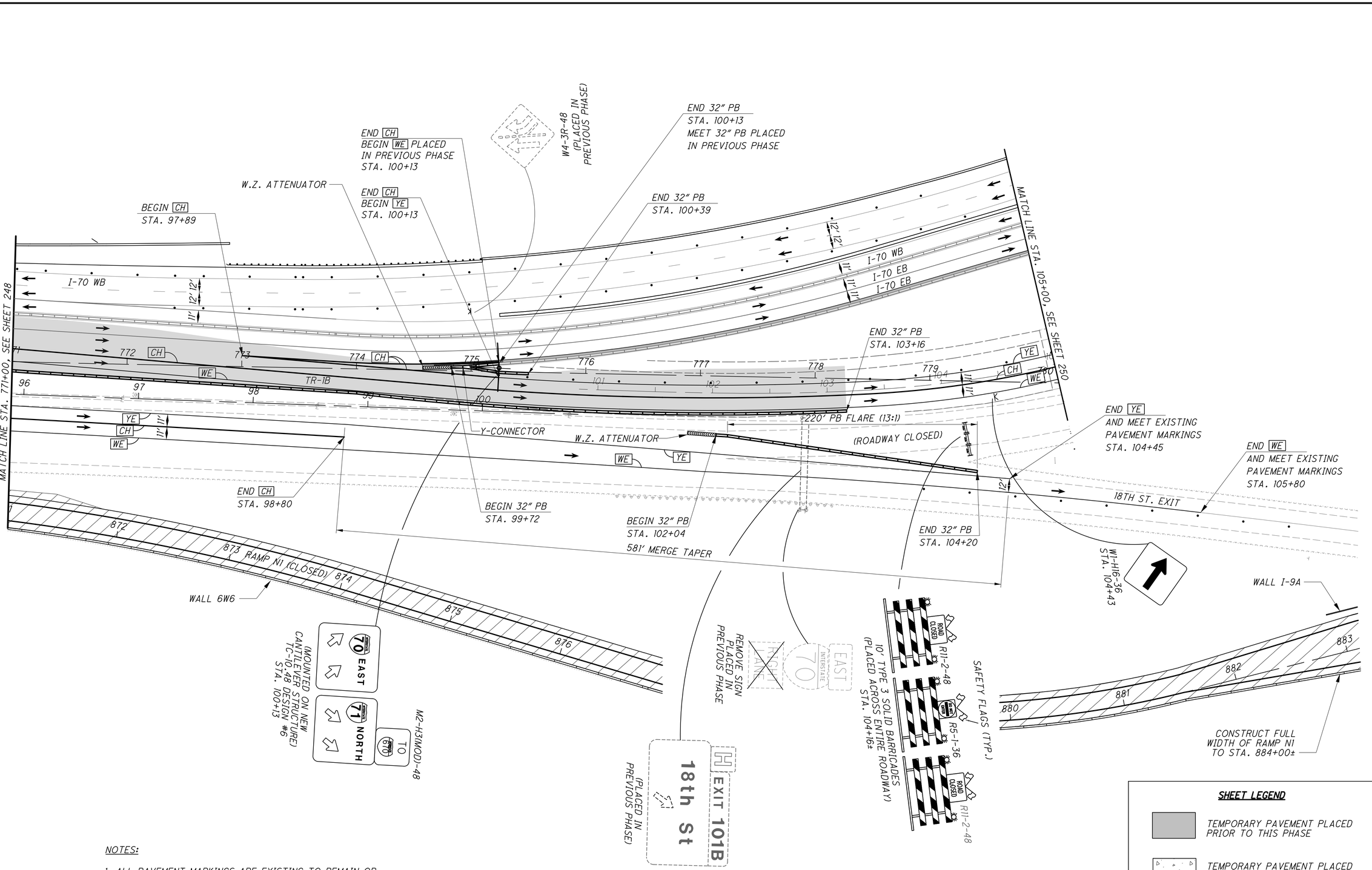

NOTES:

1. ALL PAVEMENT MARKINGS ARE EXISTING TO REMAIN OR PLACED IN A PREVIOUS MAINTENANCE OF TRAFFIC PHASE UNLESS OTHERWISE NOTED.

SHEET LEGEND

- TEMPORARY PAVEMENT PLACED PRIOR TO THIS PHASE
- TEMPORARY PAVEMENT PLACED DURING THIS PHASE
- WORK AREA

FOR COMPLETE LEGEND AND DRUM SPACING CHART, SEE SHEET 156

N

0 20 40 80
HORIZONTAL
SCALE IN FEET

CALCULATED JAH
CHECKED JML

MAINTENANCE OF TRAFFIC - PHASE 1E
PARTIAL N1

FRA-70-14.54

249
2317

PLOT.CEL

ms consultants, inc.
msconsultants.com

www.msconsultants.com

Ohio DOT Workspace
70\71 East Interchange 2E

PDF: ohdot\V8i
PCF: 60-06634_2E_Columbus

Batchplot Spec: \\msconsultants.com\files\production\03\60\06634.2E\standards\plotdir\batchplt.spc
Pen Table: \\msconsultants.com\files\Standards\ustn\ohdot\V8i\ms\plotting\pen\V8i_ms_std.tbl
Plot Driver: \\msconsultants.com\files\Standards\ustn\ohdot\v8i\ms\plotting\PDF.pltcfg

Model: Sheet
Printed: 9/28/2018 @ 10:15:23 AM
File: N:\03\60\06634.2E\mot\sheets\05322MPD03.dgn

View: FENCE_VIEW1
By: kryan

34" x 22"

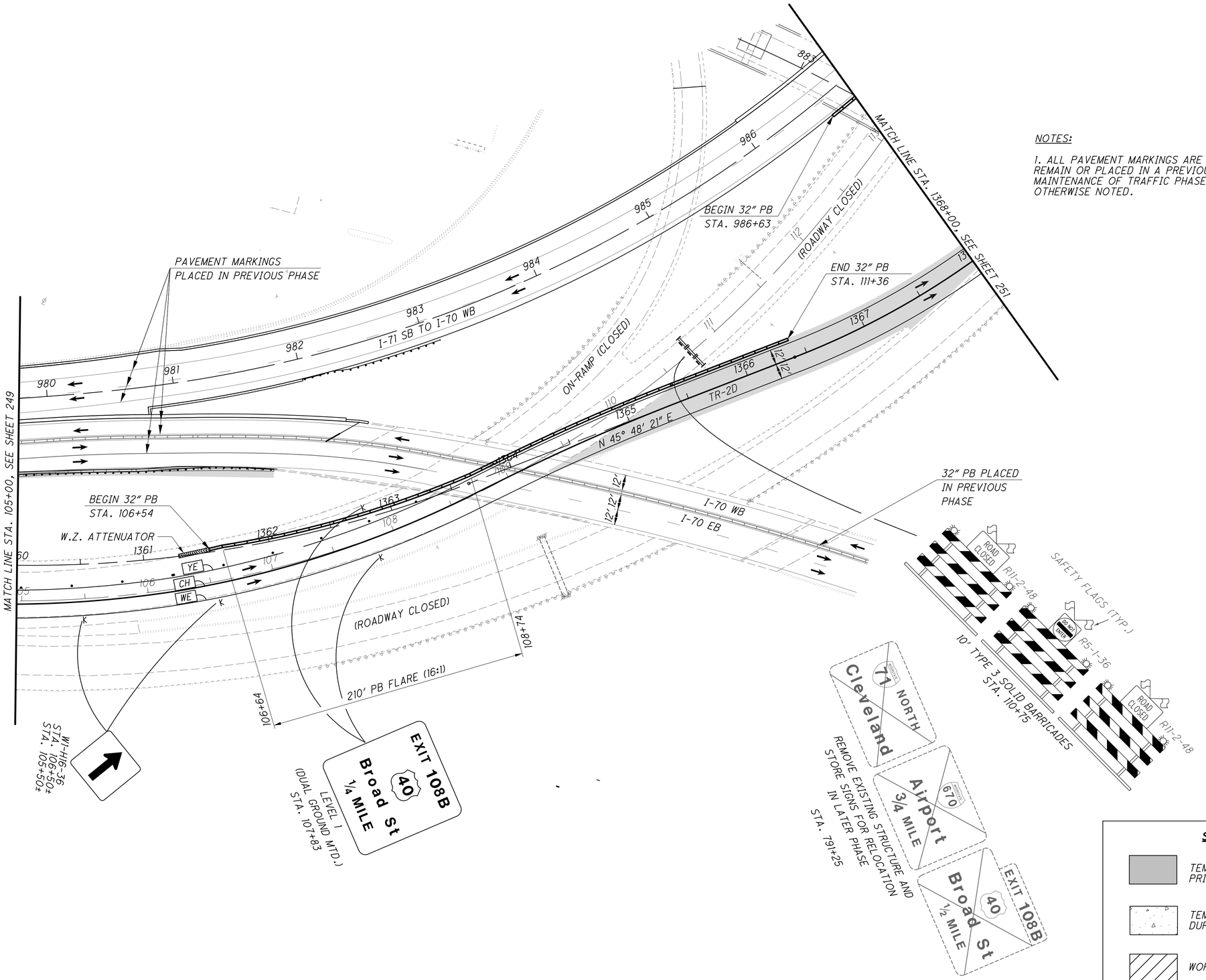

NOTES:

1. ALL PAVEMENT MARKINGS ARE EXISTING TO REMAIN OR PLACED IN A PREVIOUS MAINTENANCE OF TRAFFIC PHASE UNLESS OTHERWISE NOTED.

SHEET LEGEND

- TEMPORARY PAVEMENT PLACED PRIOR TO THIS PHASE
- TEMPORARY PAVEMENT PLACED DURING THIS PHASE
- WORK AREA

FOR COMPLETE LEGEND AND DRUM SPACING CHART, SEE SHEET 156

HORIZONTAL SCALE IN FEET
0 20 40 80

CALCULATED JAH
CHECKED JML

MAINTENANCE OF TRAFFIC - PHASE 1E
PARTIAL N1

FRA-70-14.54

ms consultants, inc.

PLOT.CEL

ms consultants, inc.
msconsultants.com

www.msconsultants.com

Ohio DOT Workspace
70\71 East Interchange 2E

0 0.5" 1"

Batchplot Spec: \\msconsultants.com\files\production\03\60\06634_2E\standards\plotdrv\batchplt.spc
Pen Table: \\msconsultants.com\files\Standards\usth\ohdot\V8i\ms\plotting\pen\V8i_ms_std.tbl
Plot Driver: \\msconsultants.com\files\Standards\usth\ohdot\V8i\ms\plotting\PDF.plt

PDF: ohdotV8i
PCF: 60-06634_2E_Columbus

Model: Sheet
Printed: 9/28/2018 @ 10:15:26 AM
File: N:\03\60\06634_2E\mot\sheets\105229MP1064.dgn

View: FENCE_VIEW1
By: kryan

34" x 22"

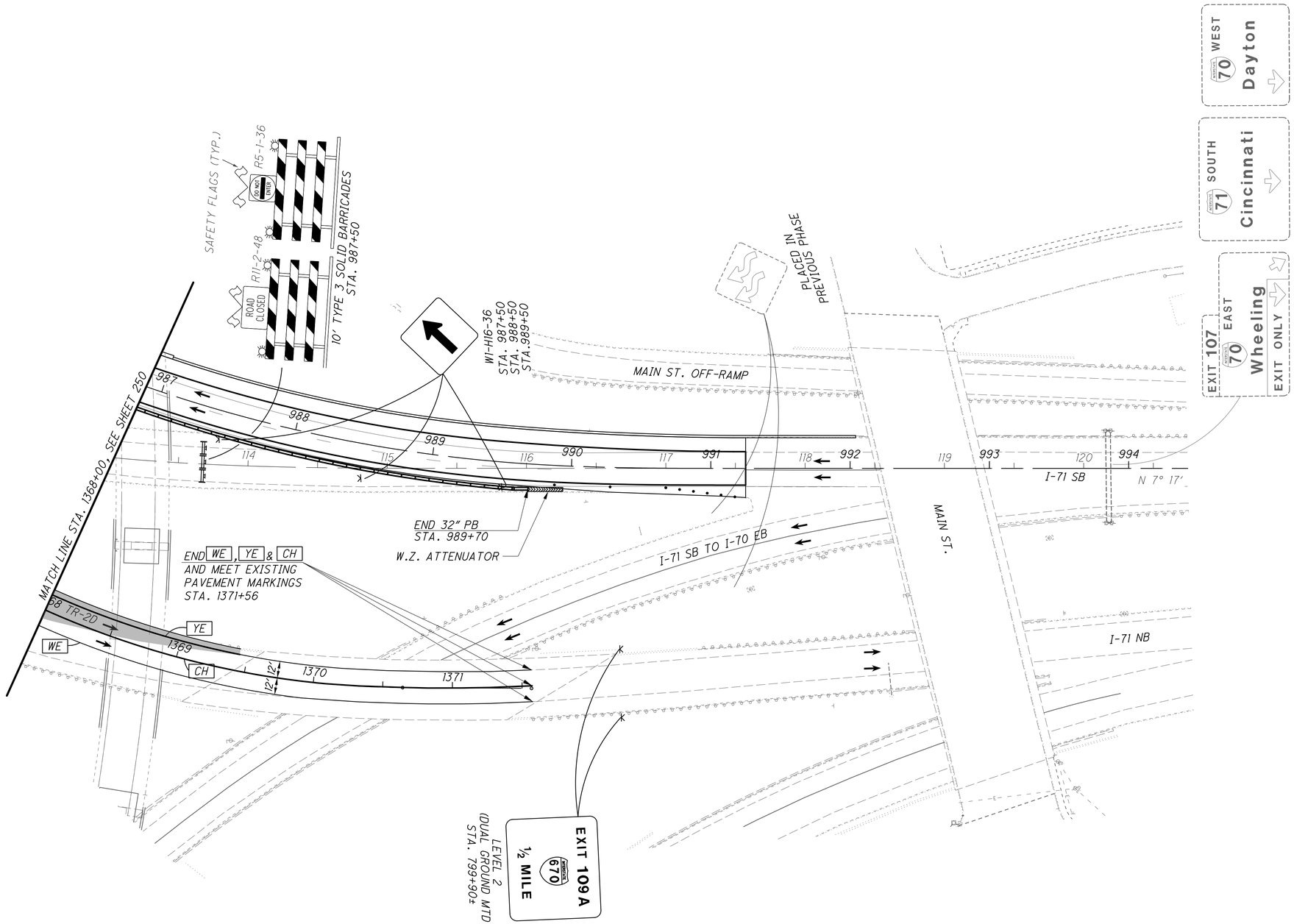

NOTES

1. ALL PAVEMENT MARKINGS ARE EXISTING TO REMAIN OR PLACED IN A PREVIOUS STEP UNLESS OTHERWISE NOTED.

SHEET LEGEND

- TEMPORARY PAVEMENT PLACED PRIOR TO THIS PHASE
- TEMPORARY PAVEMENT PLACED DURING THIS PHASE
- WORK AREA

FOR COMPLETE LEGEND AND DRUM SPACING CHART, SEE SHEET 156

N

0 20 40 80
HORIZONTAL SCALE IN FEET

CALCULATED JAH
CHECKED JML

MAINTENANCE OF TRAFFIC - PHASE 1E
PARTIAL N1

FRA-70-14.54

251
2317

PLOT.CEL

ms consultants, inc.
msconsultants.com

www.msconsultants.com

Ohio DOT Workspace
70\71 East Interchange 2E

0 0.5" 1"

Batchplot Spec: \\msconsultants.com\files\production\03\60\06634_2E\standards\plotdr\batchplt.spc
Pen Table: \\msconsultants.com\files\Standards\usltn\ohdot\V8i\ms\plotting\pen\V8i_ms_std.tbl PCF: ohdot\V8i
Plot Driver: \\msconsultants.com\files\Standards\usltn\ohdot\v8i\ms\plotting\PDF.pltcfg PCF: 60-06634_2E_Columbus

Model: Sheet View: FENCE_VIEW1
Printed: 9/28/2018 @ 10:15:29 AM By: kryan
File: N:\03\60\06634_2E\mot\sheets\105322MM1001.dgn

34" x 22"

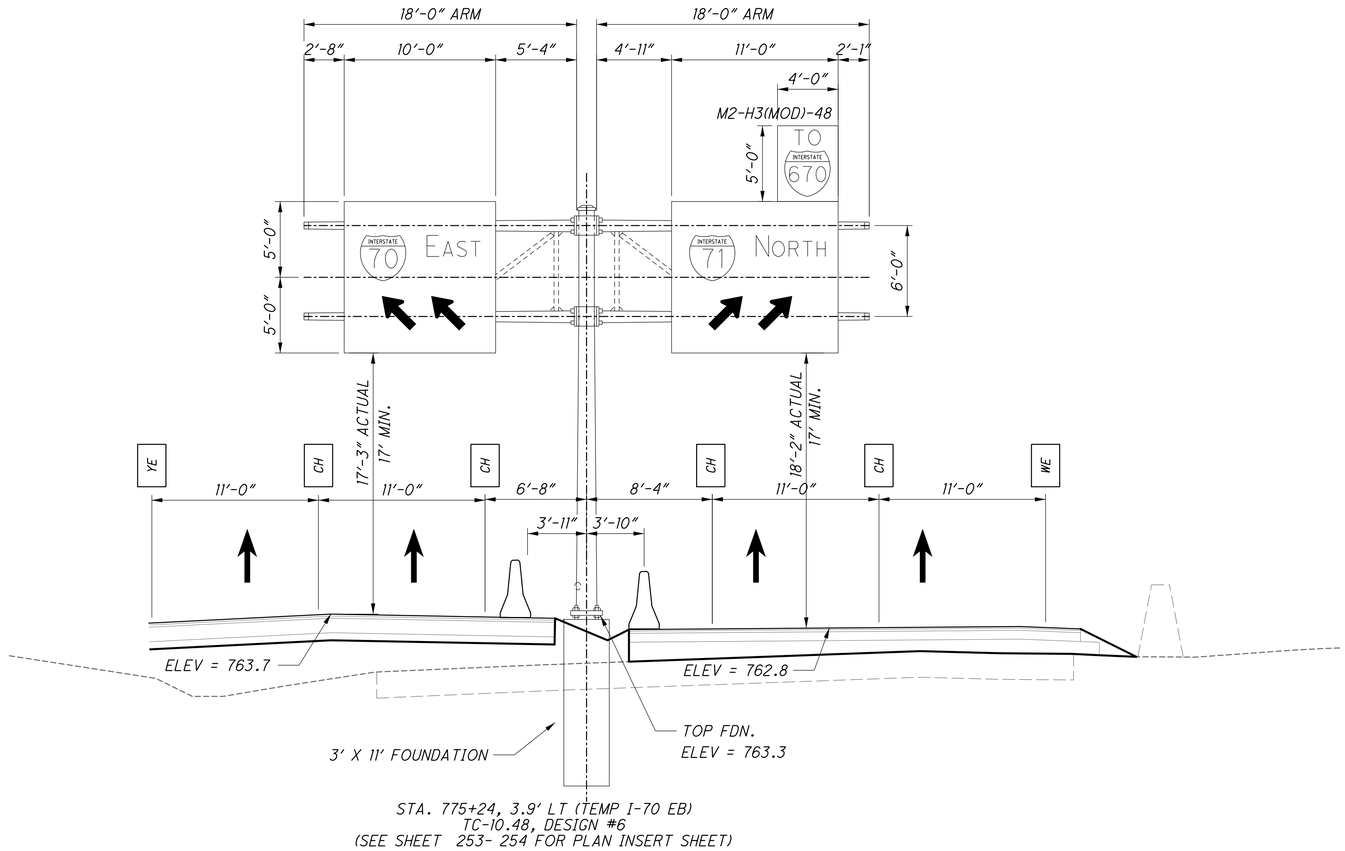

STA. 775+24, 3.9' LT (TEMP I-70 EB)
TC-10.48, DESIGN #6
(SEE SHEET 253- 254 FOR PLAN INSERT SHEET)

CALCULATED JAH
CHECKED JML

PHASE 1E - TEMPORARY CANTILEVER ELEVATION VIEW

FRA-70-14.54

PLOT.CEL
ms consultants, inc.
msconsultants.com
www.msconsultants.com
Ohio DOT Workspace
70\71 East Interchange 2E
Batchplot Spec: \\msconsultants.com\Files\production\03\60\06634.2E\standards\plotdr\batchplt.spc
Pen Table: \\msconsultants.com\Files\Standards\ustn\ohdot\V8i\ms\plotting\pen\V8i_ms_std.tbl
Plot Driver: \\msconsultants.com\Files\Standards\ustn\ohdot\v8i\ms\plotting\PDF.pltcfg
PDF: ohdot(V8i
PCF: 60-06634_2E_Columbus
0 0.5" 1"
34" x 22"
Model: Sheet
Printed: 9/28/2018 @ 10:15:30 AM
File: N:\03\60\06634.2E\mot\sheets\105222MM002.dgn
View: FENCE_VIEW1
By: kryan

CALCULATED JAH
CHECKED JML

OVERHEAD SIGN SUPPORT - TC-10.48

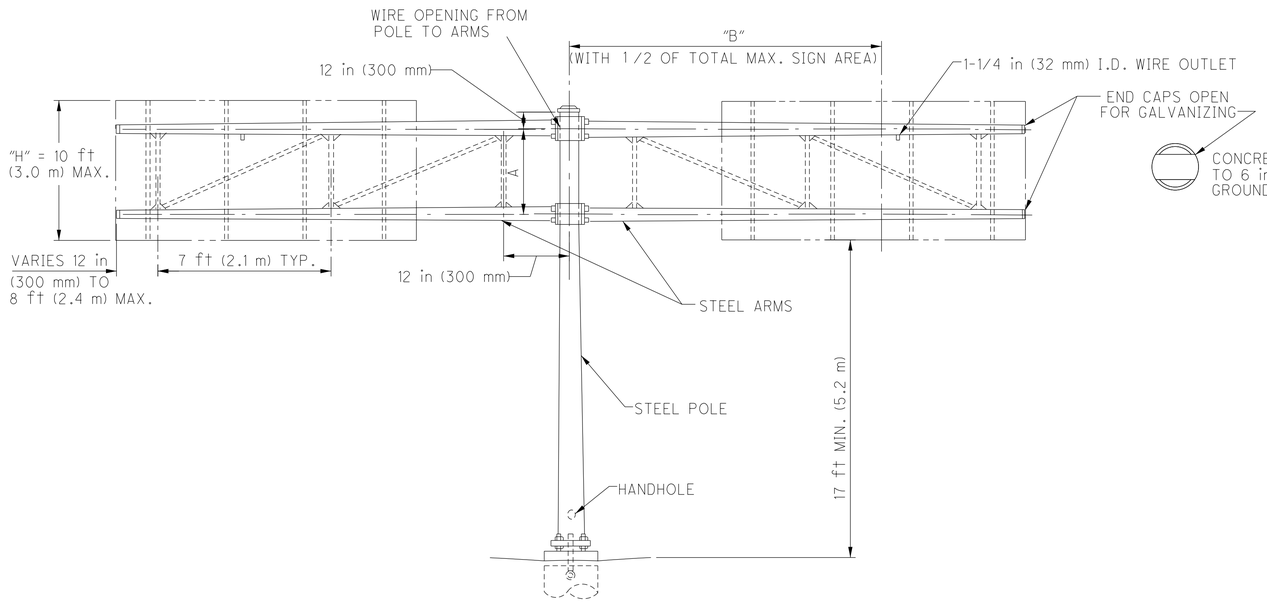

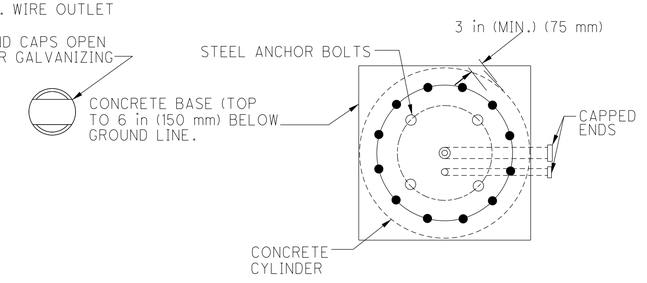

NOTES

1. For sign attachment assemblies to be furnished with this support, construction details and location of handholes and switch enclosure mounting brackets, see Standard Construction Drawings TC-22.10 and TC-22.20.
2. For modification of the pole to support roadway lighting, see Standard Construction Drawings TC-22.10 and HL-10.12.
3. Weld the base plate to two ply poles with AWS prequalified welds in conformance with 730.04.
4. Provide a removable galvanized cast iron plug for all unused couplings and wire outlets.
5. Arms 20 feet (6.1 m) and over in length shall be truss type using 3 x 3 x 3/8 inches (75 mm x 75 mm x10 mm) angles welded to gusset plates with the inside edges of the arm parallel.
6. The maximum sign area on each side of the pole equals 1/2 the maximum total area in the chart.
7. Values of "B" may be exceeded provided the product of the actual sign areas times the distance from the centerline of the pole to the centerline of the sign does not exceed the product of "B" times 1/2 the maximum sign area.
8. For signs under 20 feet (6.0 m) long, weld one threaded steel 1-1/4 inch (32 mm) pipe coupling to the top chord approximately 12 inches (300 mm) outboard of the first sign bracket. For signs 20 foot (6.0 m) long or over, weld a second threaded steel 1 ¼ inch (32 mm) pipe coupling 12 inches (300 mm) outboard of the second sign bracket. Remove all sharp edges inside the chord and pipe coupling.

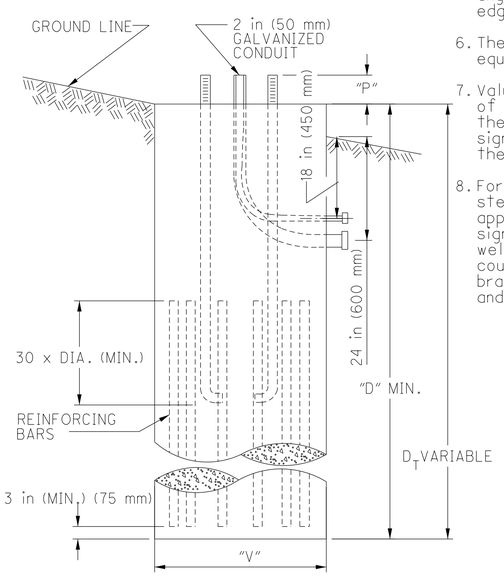

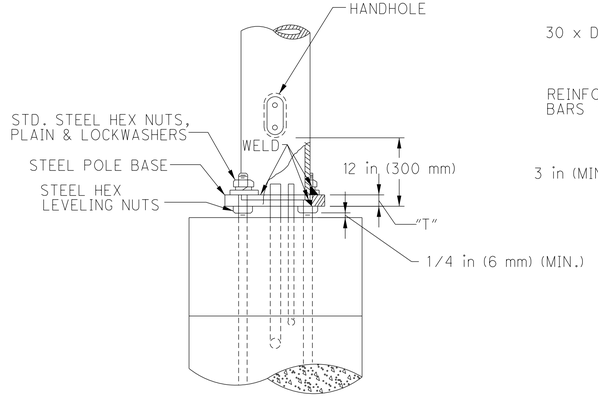

FOUNDATION DETAIL

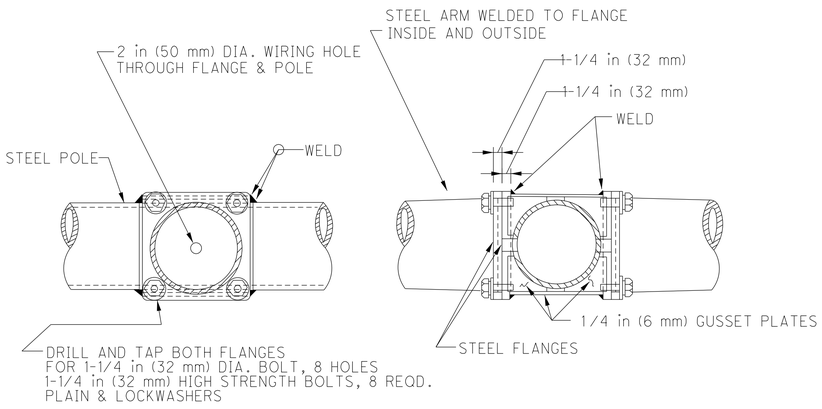

ARM ATTACHMENT DETAIL

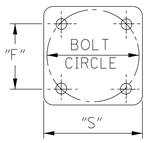

POLE DETAIL

FRA-70-14.54

PIS 202510

ms consultants, inc.

PLOT.CEL

ms consultants, inc.
msconsultants.com

www.msconsultants.com

Ohio DOT Workspace
70\71 East Interchange 2E

1"
0.5"
0

Batchplot Spec: \\msconsultants.com\files\production\Q3\60\06634_2E\standards\plotdir\batchplt.spc
Pen Table: \\msconsultants.com\files\Standards\usth\ohdot\V8i\ms\plotting\pen\V8i_ms_std.tbl PCF: ohdotV8i
Plot Driver: \\msconsultants.com\files\Standards\usth\ohdot\v8i\ms\plotting\PDF.pltcfg PCF: 60-06634_2E_Columbus

Model: Sheet
Printed: 9/28/2018 @ 10:15:32 AM View: FENCE_VIEW1
By: kryan
File: N:\03\60\06634_2E\mot\sheets\1053229MM1003.dgn

34" x 22"

ALL DIMENSIONS IN INCHES UNLESS OTHERWISE NOTED

DESIGN NO.	POLE SIZE	ARM SIZE	A (FT)	B (FT)	"D" MIN. (FT)	F	P	S	T	BOLT CIRCLE	ANCHOR BOLT SIZE	V (FT)	MAX SIGN AREA (SQ FT)	REINF. BARS SIZE	REINF. BARS NO.
1	.239x18x14.64x24 ft-0 in	.179x5.7x4.02x12 ft-0 in	4	8	9	18	8-3/8	26-1/2	2	25-1/2	2 x 96	3	160	3/4	12
2	.239x18x14.64x24 ft-0 in	.179x6.9x4.66x16 ft-0 in	4	12	9	18	8-3/8	26-1/2	2	25-1/2	2 x 96	3	160	3/4	12
3	.299x18x14.64x24 ft-0 in	.179x7.5x5.82x12 ft-0 in	4	8	1 1	18	9-3/8	26-1/2	2-1/2	25-1/2	2-1/4 x 108	3	240	1	12
4	.299x18x14.64x24 ft-0 in	.179x8.3x6.06x16 ft-0 in	4	12	1 1	18	9-3/8	26-1/2	2-1/2	25-1/2	2-1/4 x 108	3	240	1	12
5	.299x18x14.64x24 ft-0 in	.179x10x7.2x20 ft-0 in	4	16	1 1	18	9-3/8	26-1/2	2-1/2	25-1/2	2-1/4 x 108	3	220	1	12
6	2ply .239x18x14.5x25 ft-0 in	.179x10x7.48x18 ft-0 in	6	10	14	18	1 1-1/4	26-1/2	3	25-1/2	3 x 144	3	360	1-1/8	12
7	2ply .239x18x14.5x25 ft-0 in	.179x1 1x7.92x22 ft-0 in	6	14	14	18	1 1-1/4	26-1/2	3	25-1/2	3 x 144	3	360	1-1/8	12
8	2ply .299x18x14.5x25 ft-0 in	.179x12.5x9.14x24 ft-0 in	6	14	17	18	1 1-1/4	26-1/2	3	25-1/2	3 x 168	3	480	1-1/4	12
9	2ply .299x18x14.5x25 ft-0 in	.239x12.5x8.58x28 ft-0 in	6	18	17	18	1 1-1/4	26-1/2	3	25-1/2	3 x 168	3	480	1-1/4	12

ALL DIMENSIONS IN MILLIMETERS UNLESS OTHERWISE NOTED

DESIGN NO.	POLE SIZE	ARM SIZE	A (m)	B (m)	"D" MIN. (m)	F	P	S	T	BOLT CIRCLE	ANCHOR BOLT SIZE	V (m)	MAX SIGN AREA (m^2)	REINF. BARS SIZE	REINF. BARS NO.
1	6.07x457x372x7.3 m	4.55x145x102x3.7 m	1.2	2.4	2.7	457	213	673	51	648	51x2.4 m	0.9	14.9	19	36M
2	6.07x457x372x7.3 m	4.55x175x118x4.9 m	1.2	3.7	2.7	457	213	673	51	648	51x2.4 m	0.9	14.9	19	36M
3	7.59x457x372x7.3 m	4.55x190x148x3.7 m	1.2	2.4	3.4	457	238	673	64	648	57x2.7 m	0.9	22.3	25	36M
4	7.59x457x372x7.3 m	4.55x211x154x4.9 m	1.2	3.7	3.4	457	238	673	64	648	57x2.7 m	0.9	22.3	25	36M
5	7.59x457x372x7.3 m	4.55x254x183x6.1 m	1.2	4.9	3.4	457	238	673	64	648	57x2.7 m	0.9	20.5	25	36M
6	2ply 6.07x457x368x7.6 m	4.55x254x190x5.5 m	1.8	3.1	4.3	457	286	673	76	648	76x3.7 m	0.9	33.5	29	36M
7	2ply 6.07x457x368x7.6 m	4.55x279x201x6.7 m	1.8	4.3	4.3	457	286	673	76	648	76x3.7 m	0.9	33.5	29	36M
8	2ply 7.59x457x368x7.6 m	4.55x317x232x7.3 m	1.8	4.3	5.2	457	286	673	76	648	76x4.3 m	0.9	44.6	32	36M
9	2ply 7.59x457x368x7.6 m	4.55x317x218x8.5 m	1.8	5.5	5.2	457	286	673	76	648	76x4.3 m	0.9	44.6	32	36M

CALCULATED JAH
CHECKED JML

OVERHEAD SIGN SUPPORT - TC-10.48

FRA-70-14.54

PIS 202510

ms consultants, inc.

PLOT.CEL

ms consultants, inc.
msconsultants.com

Ohio DOT Workspace
70\71 East Interchange 2E
www.msconsultants.com

1"
0.5"
0

Batchplot Spec: \\msconsultants.com\Files\production\03\60\06634.2E\standards\plotdrv\batchplt.spc
Pen Table: \\msconsultants.com\Files\Standards\ustn\ohdot\V8\ms\plotting\pen\V8i_ms_std.tbl PCF: ohdot\V8i
Plot Driver: \\msconsultants.com\Files\Standards\ustn\ohdot\V8\ms\plotting\PDF.pltcfg PCF: 60-06634_2E_Columbus

Model: Sheet View: FENCE_VIEW1
Printed: 9/28/2018 @ 10:15:37 AM By: kryan
File: N:\03\60\06634_2E\mot\sheets\v7370MT60001.dgn

34" x 22"

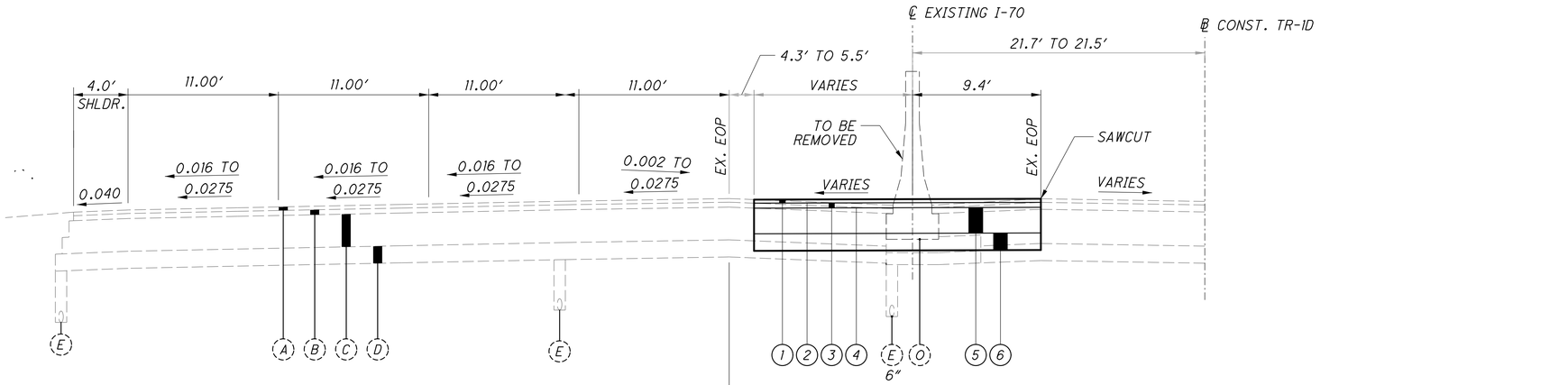

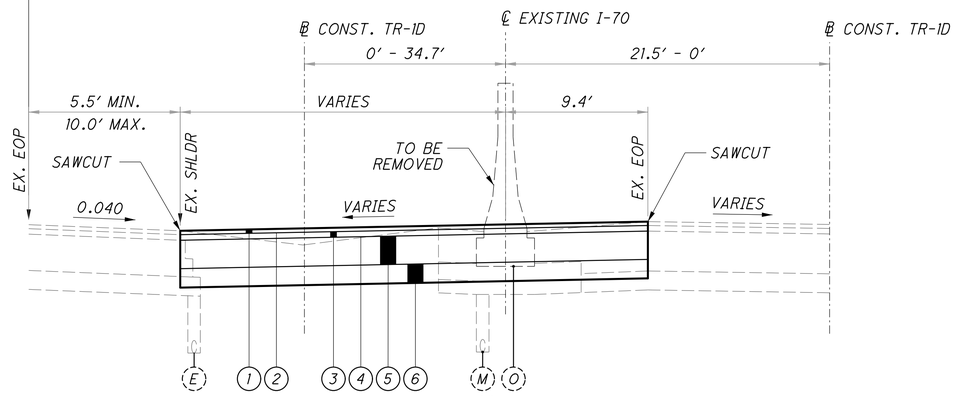

SUPERELEVATED SECTION - PAVEMENT FOR MAINTAINING TRAFFIC, CLASS A, AS PER PLAN - TR-1D

SECTION APPLIES:
STA. 1106+33.87 TO STA. 1111+35.47 = 501.60 LIN. FT.

STA. 1106+55.61 TO STA. 1111+35.47 = 479.86 LIN. FT.

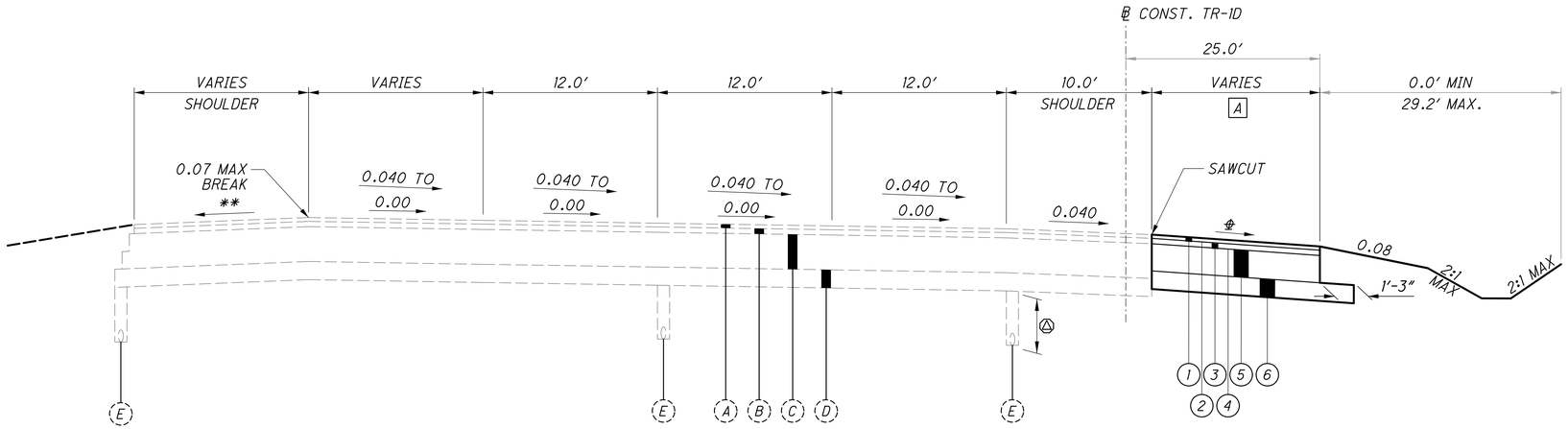

A *STA. 1111+35.47 TO STA. 1116+16.69 = 36.46′ TO 11.00′*
STA. 111+16.69 TO STA. 1117+04.47 = 11.00′

SUPERELEVATED SECTION - PAVEMENT FOR MAINTAINING TRAFFIC, CLASS A, AS PER PLAN - TR-1D

SECTION APPLIES:
STA. 1111+35.47 TO STA. 1117+04.47 = 569.00 LIN. FT.

℄ *MATCH EXISTING CROSS SLOPE*

LEGEND FOR EXISTING PAVEMENT

- (A) *1.5″ ASPHALT CONCRETE SURFACE COURSE*
- (B) *1.75″ ASPHALT CONCRETE INTERMEDIATE COURSE*
- (C) *9.5″ ASPHALT CONCRETE BASE*
- (D) *6″ AGGREGATE BASE*
- (E) *EXISTING UNDERDRAIN*
- (E) *EXISTING BARRIER*

LEGEND FOR: ITEM 615 - PAVEMENT FOR MAINTAINING TRAFFIC, CLASS A, AS PER PLAN

- (1) *ITEM 441 - 1.5″ ASPHALT CONCRETE SURFACE, TYPE 1, PG64-22*
- (2) *ITEM 407 - TACK COAT FOR INTERMEDIATE COURSE (0.04 GAL/SY)*
- (3) *ITEM 441 - 1.75″ ASPHALT CONCRETE INTERMEDIATE COURSE, TYPE 2, PG64-22*
- (4) *ITEM 407 - TACK COAT (0.075 GAL/SY)*
- (5) *ITEM 302 - 9″ ASPHALT CONCRETE BASE, PG64-22*
- (6) *ITEM 304 - 6″ AGGREGATE BASE*

CALCULATED JAH
CHECKED JML

MOT - TYPICAL SECTIONS - TR-1D (TEMP I-70 EB)
STA. 1106+33.87 TO STA. 1117+04.47

FRA-70-14.54

ms consultants, inc.

34" x 22"
Model: Sheet View: FENCE_VIEW1
Printed: 9/28/2018 @ 10:16:22 AM By: kryan
File: N:\03\60\06634_2E\mot\sheets\77370MP601D01.dgn
Batchplot Spec: \\msconsultants.com\files\production\03\60\06634_2E\standards\plotdrv\batchplt.spc
Pen Table: \\msconsultants.com\files\Standards\ustn\ohdot\V8i\ms\plotting\pen\V8i_ms_std.tbl
Plot Driver: \\msconsultants.com\files\Standards\ustn\ohdot\v8i\ms\plotting\PDF.pltcfg
PCF: ohdotV8i
PCF: 60-06634_2E_Columbus
Ohio DOT Workspace
70\71 East Interchange 2E
www.msconsultants.com
ms consultants, inc.
msconsultants.com
PLOT.CEL

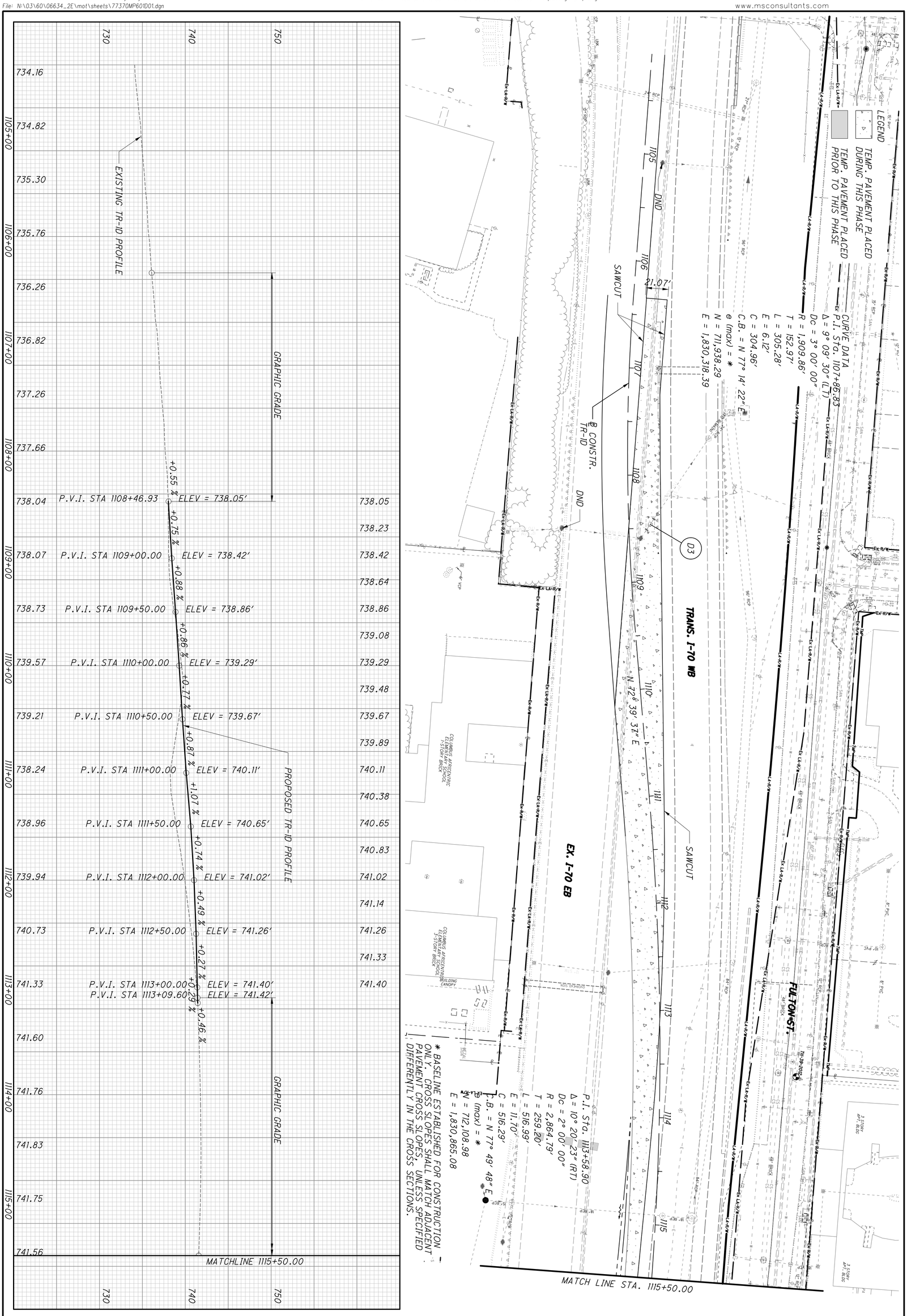

256
2317
FRA-70-14.54
MOT - PLAN & PROFILE TR-1D (TEMP I-70 EB)
STA. 1104+06.73 TO STA. 1115+50.00
CALCULATED JAH
CHECKED JML
0 20 40 80
HORIZONTAL SCALE IN FEET
ms consultants, inc.

PLOT.CEL

ms consultants, inc.
msconsultants.com

Ohio DOT Workspace
70\71 East Interchange 2E
www.msconsultants.com

1" 0 0.5"

Batchplot Spec: \\msconsultants.com\files\production\03\60\06634.2E\standards\plotdrv\batchplt.spc
Pen Table: \\msconsultants.com\files\Standards\ustn\ohdot\V8i\ms\plotting\pen\V8i_ms_std.tbl
Plot Driver: \\msconsultants.com\files\Standards\ustn\ohdot\v8i\ms\plotting\PDF.pltcfg
CF: ohdotV8i
DF: 60-06634_2E_Columbus

Model: Sheet View: FENCE_VIEW1
Printed: 9/28/2018 @ 10:16:28 AM By: kryan
File: N:\03\60\06634_2E\mot\sheets\v7370MP601002.dgn

34" x 22"

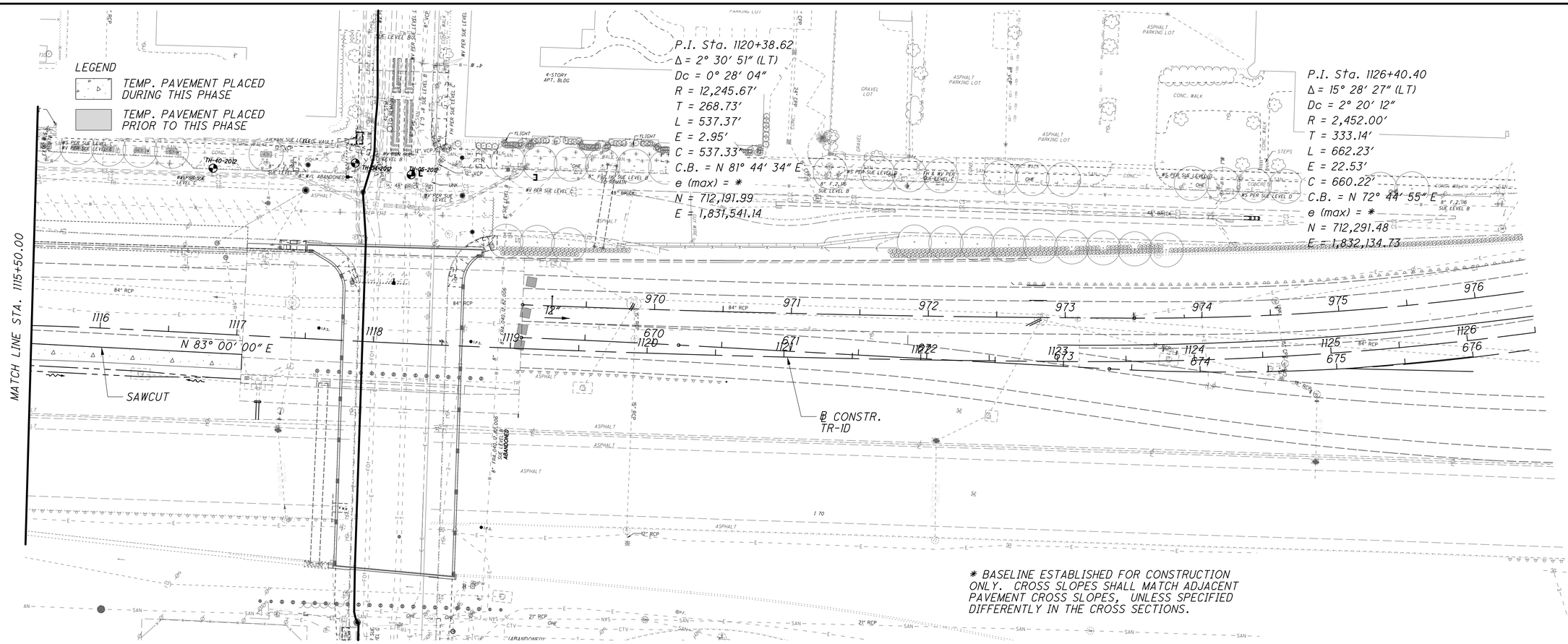

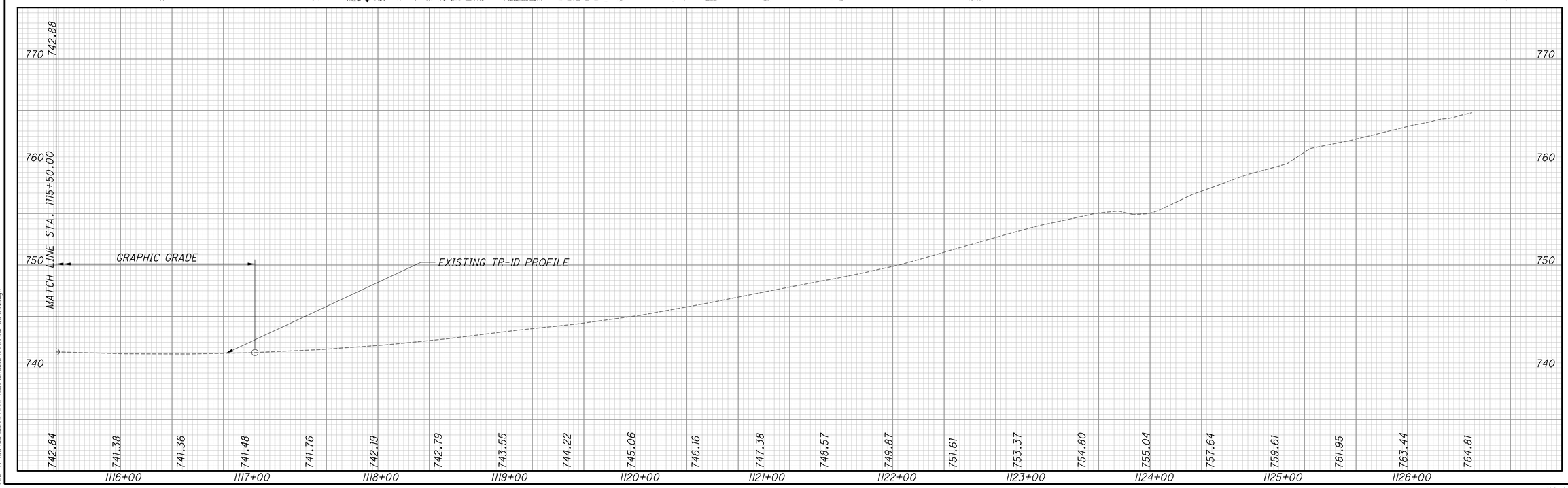

N

0 20 40 80 HORIZONTAL SCALE IN FEET

CALCULATED JAH
CHECKED JML

MOT - PLAN & PROFILE TR-1D (TEMP I-70 EB)
STA. 1115+50.00 TO STA. 1126+50.00

FRA-70-14.54

257
2317

ms consultants, inc.

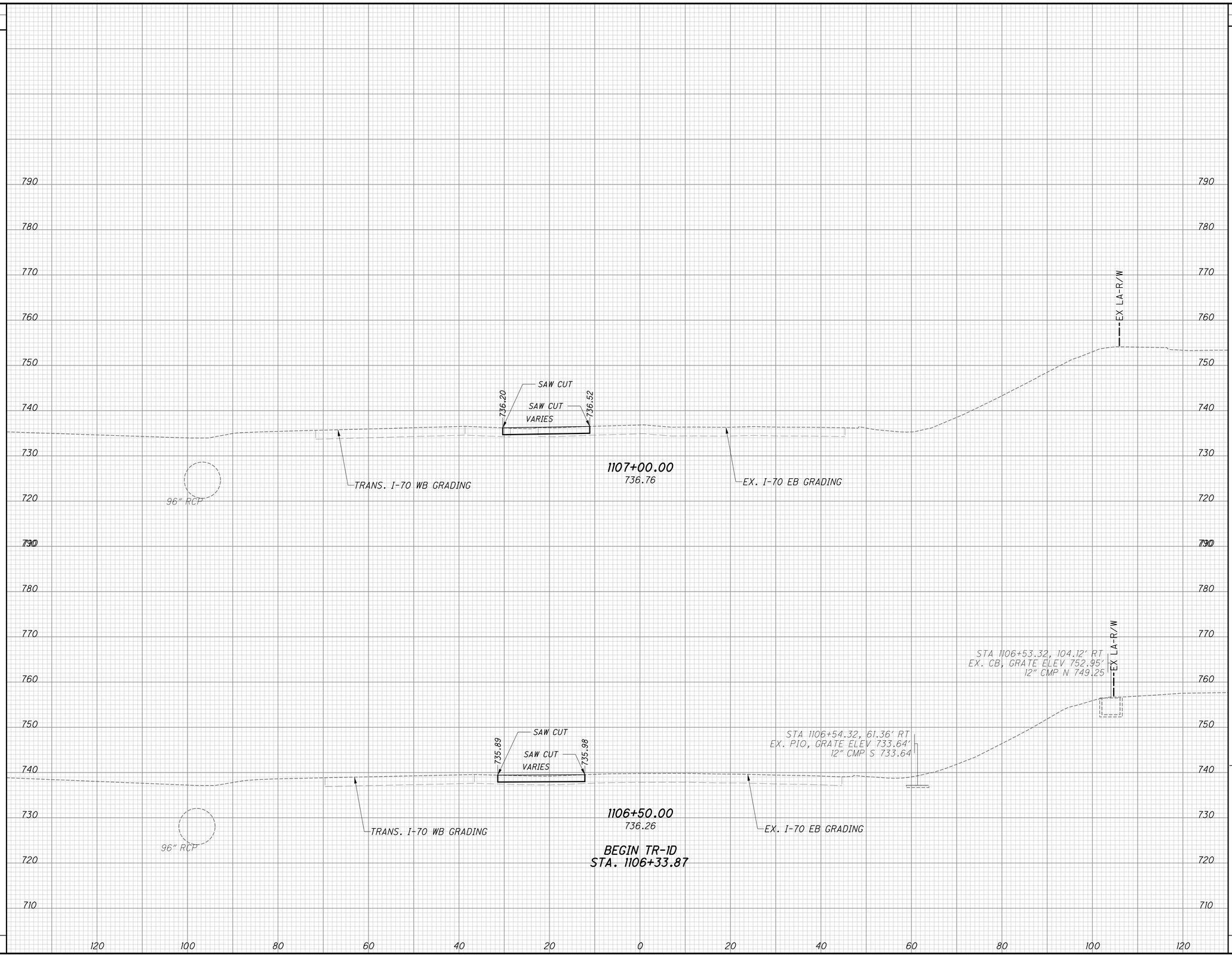

END AREA CUT	END AREA FILL	VOLUME CUT	VOLUME FILL
27	0		
		49	0
26	0	AH	
26	0	BK	
		16	0
		65	0

CALCULATED JAH
CHECKED JML

MOT - CROSS SECTIONS TR-1D (TEMP I-70 EB)
STA. 1106+50.00 TO STA. 1107+00.00

FRA-70-14.54

258
2317

ms consultants, inc.

PLOT.CEL

ms consultants, inc.
msconsultants.com

www.msconsultants.com

Ohio DOT Workspace
70\71 East Interchange 2E

Batchplot Spec: \\msconsultants.com\files\production\03\60\06634_2E\standards\plotdrv\batchplt.spc
Pen Table: \\msconsultants.com\files\Standards\ustn\ohdot\V8i\ms\plotting\pen\V8i_ms_std.tbl
Plot Driver: \\msconsultants.com\files\Standards\ustn\ohdot\v8i\ms\plotting\PDF.pltcfg

34" x 22"

Model: XS_SHEET_1107+50.00_TO_1108+00.00 SHEET
Printed: 9/28/2018 @ 10:16:30 AM By: kryan
File: N:\03\60\06634_2E\mot\sheets\77370XS601D00.dgn

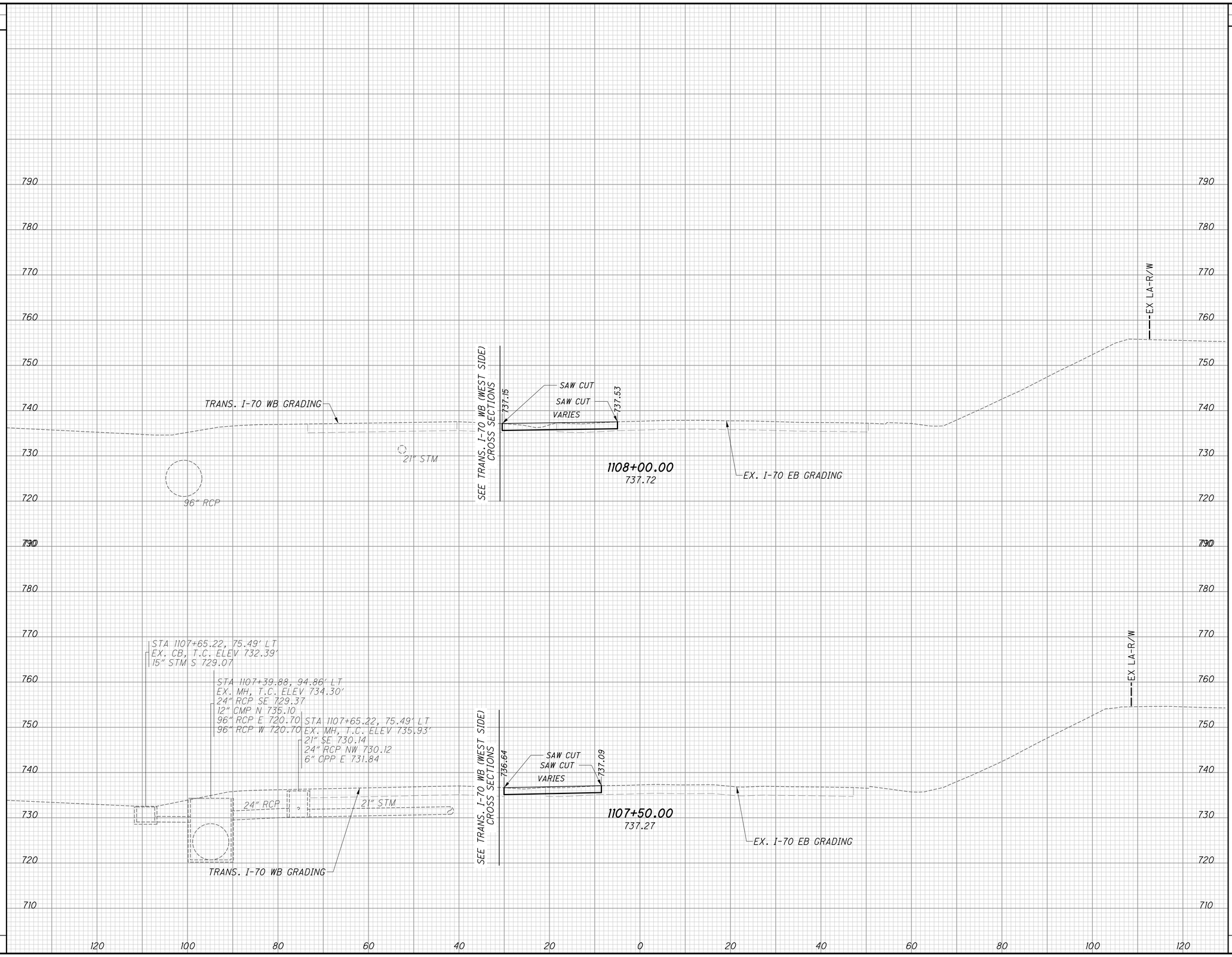

END AREA CUT	END AREA FILL	VOLUME CUT	VOLUME FILL
31	0		
		55	0
29	0		
		51	0
		106	0

CALCULATED JAH
CHECKED JML

MOT - CROSS SECTIONS TR-1D (TEMP I-70 EB)
STA. 1107+50.00 TO STA. 1108+00.00

FRA-70-14.54

ms consultants, inc.

PLOT.CEL
ms consultants, inc.
msconsultants.com
www.msconsultants.com
Ohio DOT Workspace
70\71 East Interchange 2E
Batchplot Spec: \\msconsultants.com\files\production\03\60\06634_2E\standards\plotdrv\batchplt.spc
Pen Table: \\msconsultants.com\files\Standards\ustn\ohdot\V8i\ms\plotting\pen\V8i_ms_std.tbl
Plot Driver: \\msconsultants.com\files\Standards\ustn\ohdot\v8i\ms\plotting\PDF.pltcfg
34" x 22"
Model: XS_SHEET_1107+50.00_TO_1108+00.00 SHEET
Printed: 9/28/2018 @ 10:16:32 AM By: kryan
File: N:\03\60\06634_2E\mot\sheets\77370XS601D01.dgn

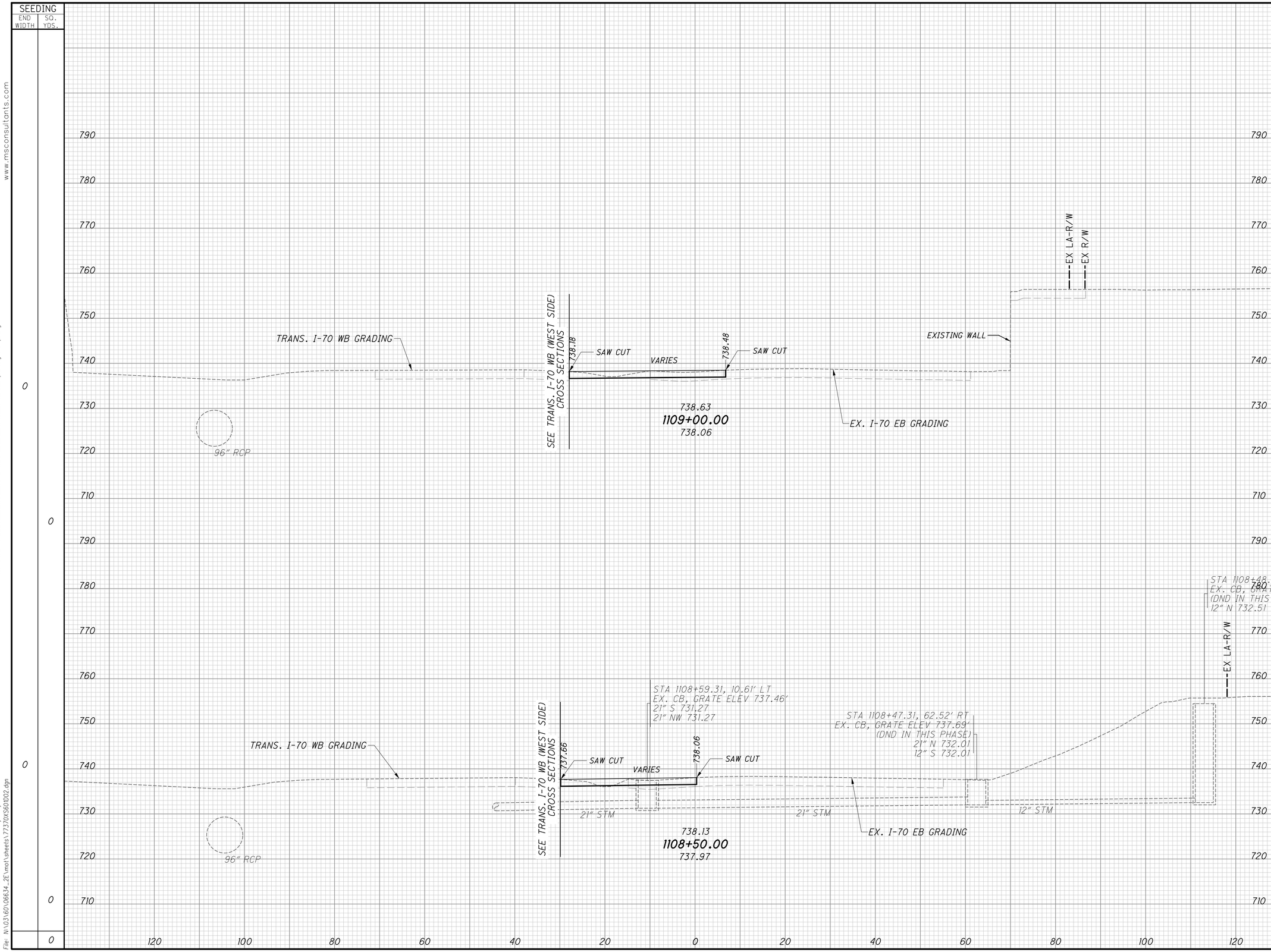

END AREA CUT	END AREA FILL	VOLUME CUT	VOLUME FILL
38	0		
		62	1
29	1		
		55	1
		117	2

CALCULATED JAH
CHECKED JML

MOT - CROSS SECTIONS TR-1D (TEMP I-70 EB)
STA. 1108+50.00 TO STA. 1109+00.00

FRA-70-14.54

ms consultants, inc.

PLOT.CEL
ms consultants, inc.
msconsultants.com
www.msconsultants.com
Ohio DOT Workspace
70\71 East Interchange 2E
Batchplot Spec: \\msconsultants.com\files\production\03\60\06634_2E\standards\plotdrv\batchplt.spc
Pen Table: \\msconsultants.com\files\Standards\ustn\ohdot\V8i\ms\plotting\pen\V8i_ms_std.tbl
Plot Driver: \\msconsultants.com\files\Standards\ustn\ohdot\v8i\ms\plotting\PDF.pltcfg
34" x 22"
Model: XS_SHEET_1108+50.00_TO_1109+00.00
Printed: 9/28/2018 @ 10:16:34 AM By: kryan
File: N:\03\60\06634_2E\mot\sheets\77370XS601D02.dgn

PLOT.CEL

ms consultants, inc.
msconsultants.com

Ohio DOT Workspace
70\71 East Interchange 2E
www.msconsultants.com

Batchplot Spec: \\msconsultants.com\files\production\03\60\06634_2E\standards\plotdrv\batchplt.spc
Pen Table: \\msconsultants.com\files\Standards\ustn\ohdot\V8i\ms\plotting\pen\V8i_ms_std.tbl
Plot Driver: \\msconsultants.com\files\Standards\ustn\ohdot\v8i\ms\plotting\PDF.pltcfg

34" x 22"

Model: XS_SHEET_1109+50.00_TO_1110+00.00
Printed: 9/28/2018 @ 10:16:35 AM By: kryan
File: N:\03\60\06634_2E\mot\sheets\77370XS601D03.dgn

SEEDING END WIDTH	SEEDING SQ. YDS.	END AREA CUT	END AREA FILL	VOLUME CUT	VOLUME FILL
0		50	0		
	0			84	0
0		41	0		
	0			74	0
	0			158	0

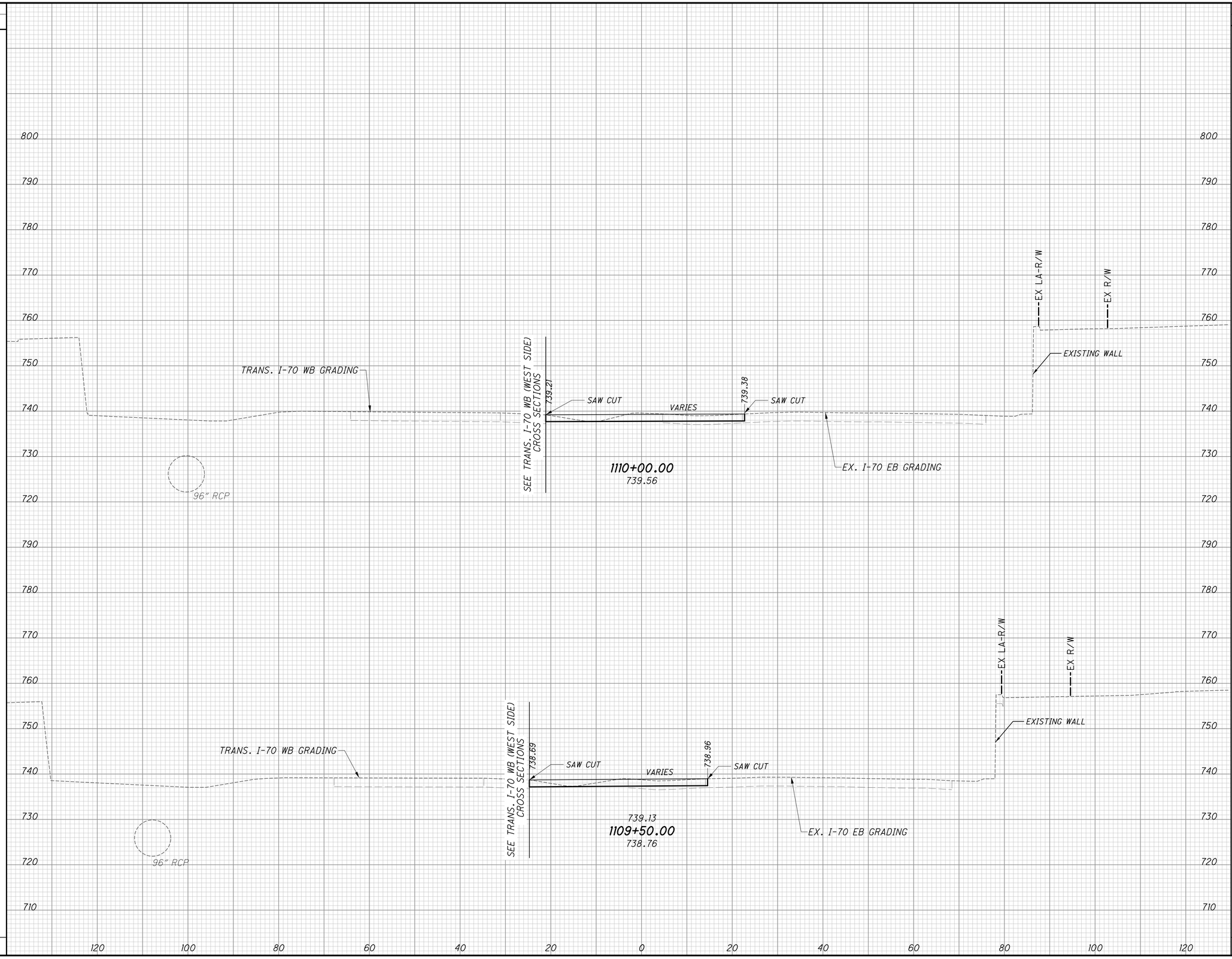

CALCULATED JAH
CHECKED JML

MOT - CROSS SECTIONS TR-1D (TEMP I-70 EB)
STA. 1109+50.00 TO STA. 1110+00.00

FRA-70-14.54

261
2317

ms consultants, inc.

PLOT.CEL

ms consultants, inc.
msconsultants.com

www.msconsultants.com

Ohio DOT Workspace
70\71 East Interchange 2E

1" 0 0.5"

Batchplot Spec: \\msconsultants.com\files\production\03\60\06634.2E\standards\oldr\batchplt.SPC
Pen Table: \\msconsultants.com\files\Standards\astm\ohdot\V8i\ms\plotting\pen\V8i_ms_std.TBL PCF: ohdot\V8i
Plot Driver: \\msconsultants.com\files\Standards\astm\ohdot\v8i\ms\plotting\PDF.pltcfg PCF: 60-06634_2E_Columbus

34" x 22"

Model: XS_SHEET_1110+50.00_TO_1111+00.00ex Sheet: SHEET
Printed: 9/28/2018 @ 10:16:37 AM By: kryan
File: N:\03\60\06634_2E\mot\sheets\773705560004.dgn

SEEDING	
END WIDTH	SQ. YDS.
0	0
0	0

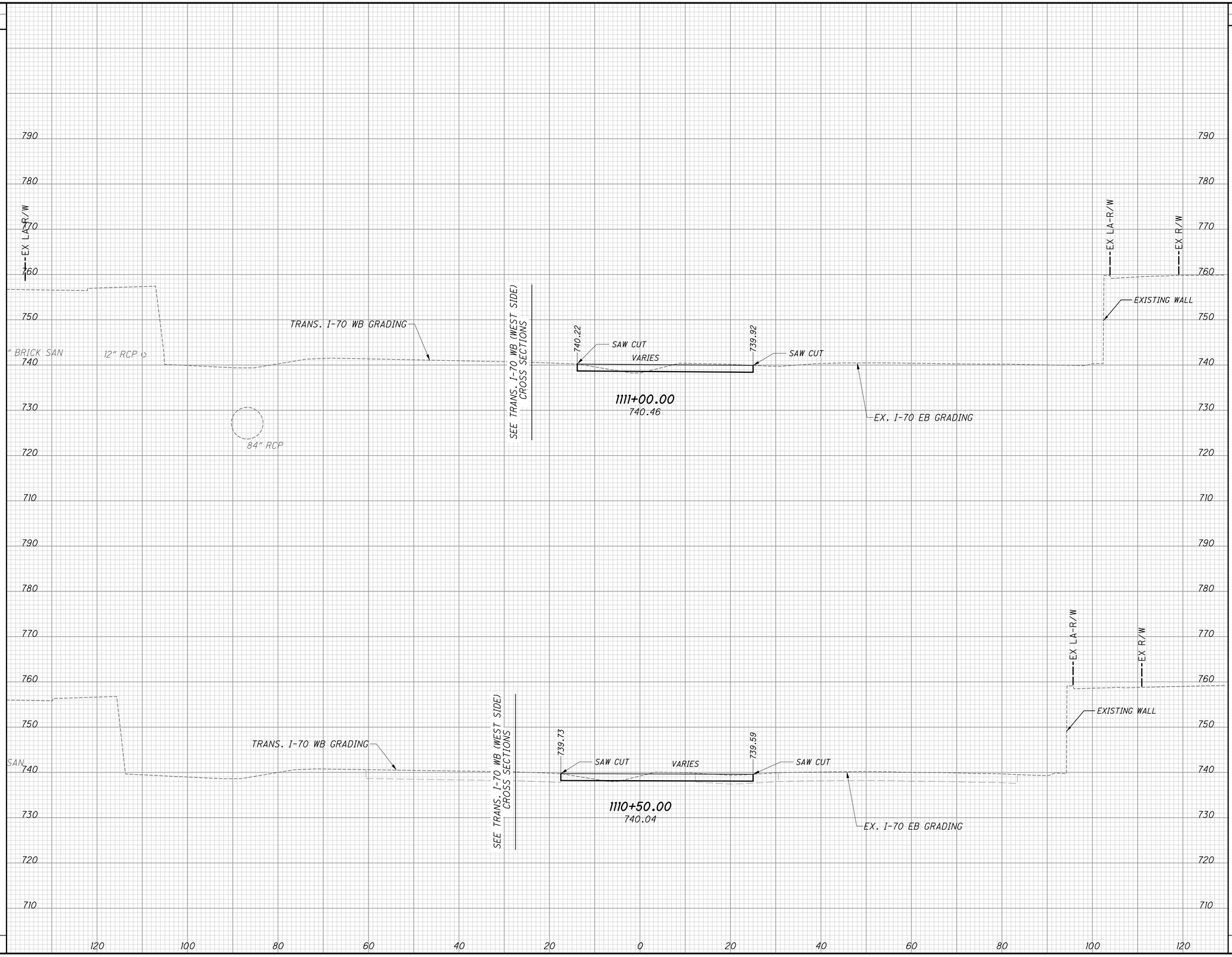

END AREA		VOLUME	
CUT	FILL	CUT	FILL
43	1	85	2
49	1	92	1
		177	3

CALCULATED JAH
CHECKED JML

MOT - CROSS SECTIONS TR-1D (TEMP I-70 EB)
STA. 1110+50.00 TO STA. 1111+00.00

FRA-70-14.54

ms consultants, inc.

PLOT.CEL

ms consultants, inc.
msconsultants.com

www.msconsultants.com

Ohio DOT Workspace
70\71 East Interchange 2E

1" 0 0.5"

Batchplot Spec: \\msconsultants.com\files\production\03\60\06634.2E\standards\oldtr\batchplt.SBC
Pen Table: \\msconsultants.com\files\Standards\astm\ohdot\V8i\ms\plotting\pen\V8i_ms_std.tbl PCF: ohdotV8i
Plot Driver: \\msconsultants.com\files\Standards\astm\ohdot\v8i\ms\plotting\PDF.pltcfg PCF: 60-06634_2E_Columbus

Model: XS_SHEET_1111+50.00_TO_1112+00.00ex
Printed: 9/28/2018 @ 10:16:38 AM By: kryan
File: N:\03\60\06634_2E\mot\sheets\773705601005.dgn

34" x 22"

SEEDING	
END WIDTH	SQ. YDS.
0	
0	
0	
0	
0	

END AREA		VOLUME	
CUT	FILL	CUT	FILL
25	3		
31	3		
51	6		
68	4		
119	10		

CALCULATED JAH
CHECKED JML

MOT - CROSS SECTIONS TR-1D (TEMP I-70 EB)
STA. 1111+50.00 TO STA. 1112+00.00

FRA-70-14.54

263
2317

ms consultants, inc.

PLOT.CEL

ms consultants, inc.
msconsultants.com

Ohio DOT Workspace
70\71 East Interchange 2E

www.msconsultants.com

0 1" 0.5"

Batchplot Spec: \\msconsultants.com\files\production\03\60\06634.2E\standards\oladr\batchplt.SPC
Pen Table: \\msconsultants.com\files\Standards\ustn\ohdot\V8\ms\plotting\pen\V8i_ms_std.TBL PDF: ohdotV8i
Plot Driver: \\msconsultants.com\files\Standards\ustn\ohdot\v8\ms\plotting\PDF.pltcfg PDF: 60-06634_2E_Columbus

34" x 22"

Model: XS_SHEET_1112+50.00_TO_1113+00.00
Printed: 9/28/2018 @ 10:16:40 AM By: kryon
File: N:\03\60\06634_2E\mot\sheets\773705601006.dgn

SEEDING	
END WIDTH	SQ. YDS.
0	0
0	0
0	0

END AREA		VOLUME	
CUT	FILL	CUT	FILL
21	0	35	2
16	2	37	5
		72	7

CALCULATED JAH
CHECKED JML

MOT - CROSS SECTIONS TR-1D (TEMP I-70 EB)
STA. 1112+50.00 TO STA. 1113+00.00

FRA-70-14.54

264
2317

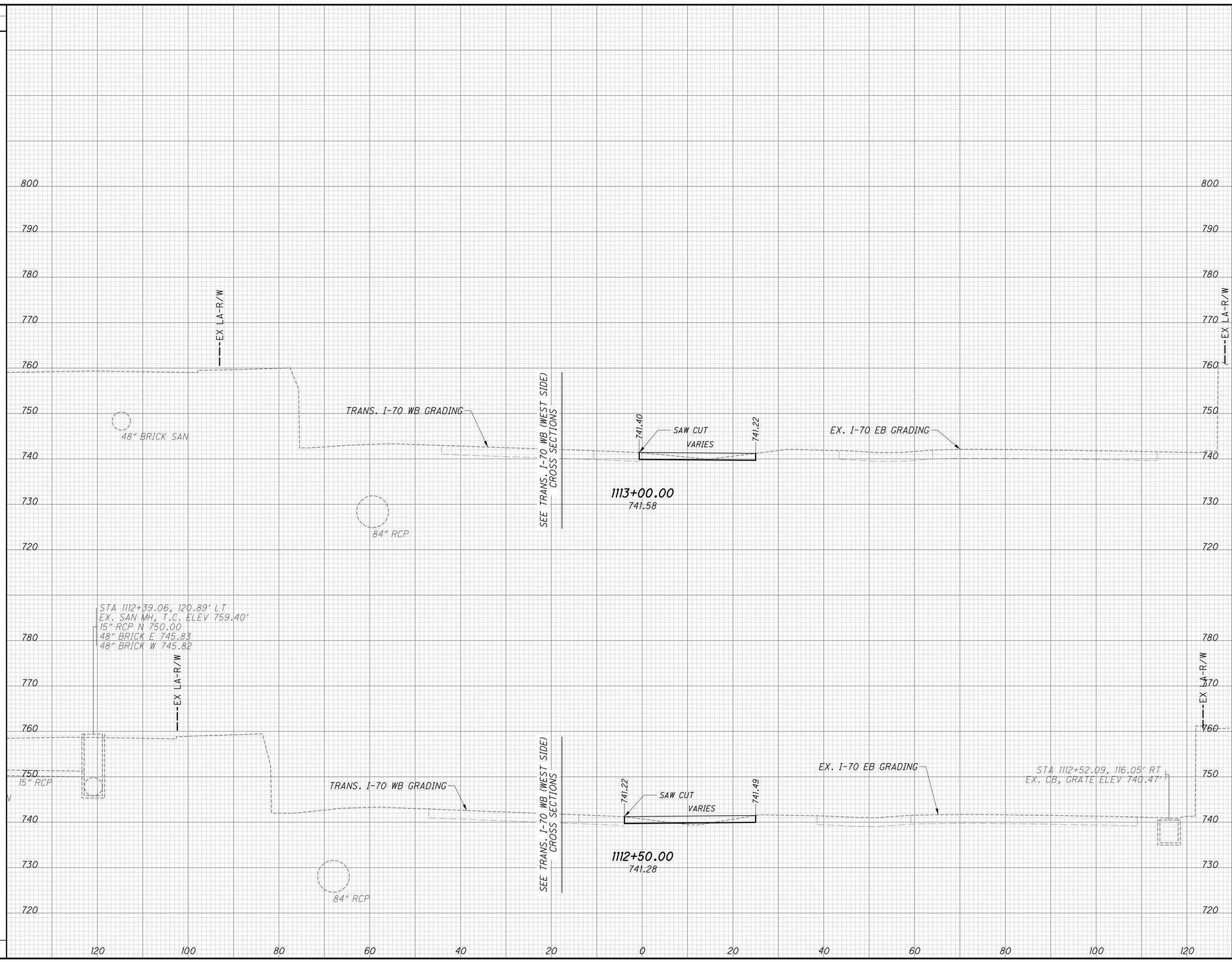

PLOT.CEL

ms consultants, inc.
msconsultants.com

Ohio DOT Workspace
70\71 East Interchange 2E

www.msconsultants.com

0 1" 0.5"

Batchplot Spec: \\msconsultants.com\files\production\03\60\06634.2E\standards\oldr\batchplt.SPC
Pen Table: \\msconsultants.com\files\Standards\astn\ohdot\V8i\ms\plotting\pen\V8i_ms_std.TBL
Plot Driver: \\msconsultants.com\files\Standards\astn\ohdot\v8i\ms\plotting\PDF.pltcfg

Model: XS_SHEET_1113+50.00_TO_1114+00.00
Printed: 9/28/2018 @ 10:16:42 AM By: kryon
File: N:\03\60\06634.2E\mot\sheets\773705601007.dgn

34" x 22"

SEEDING END WIDTH	SEEDING SQ. YDS.
2	5
0	0
5	

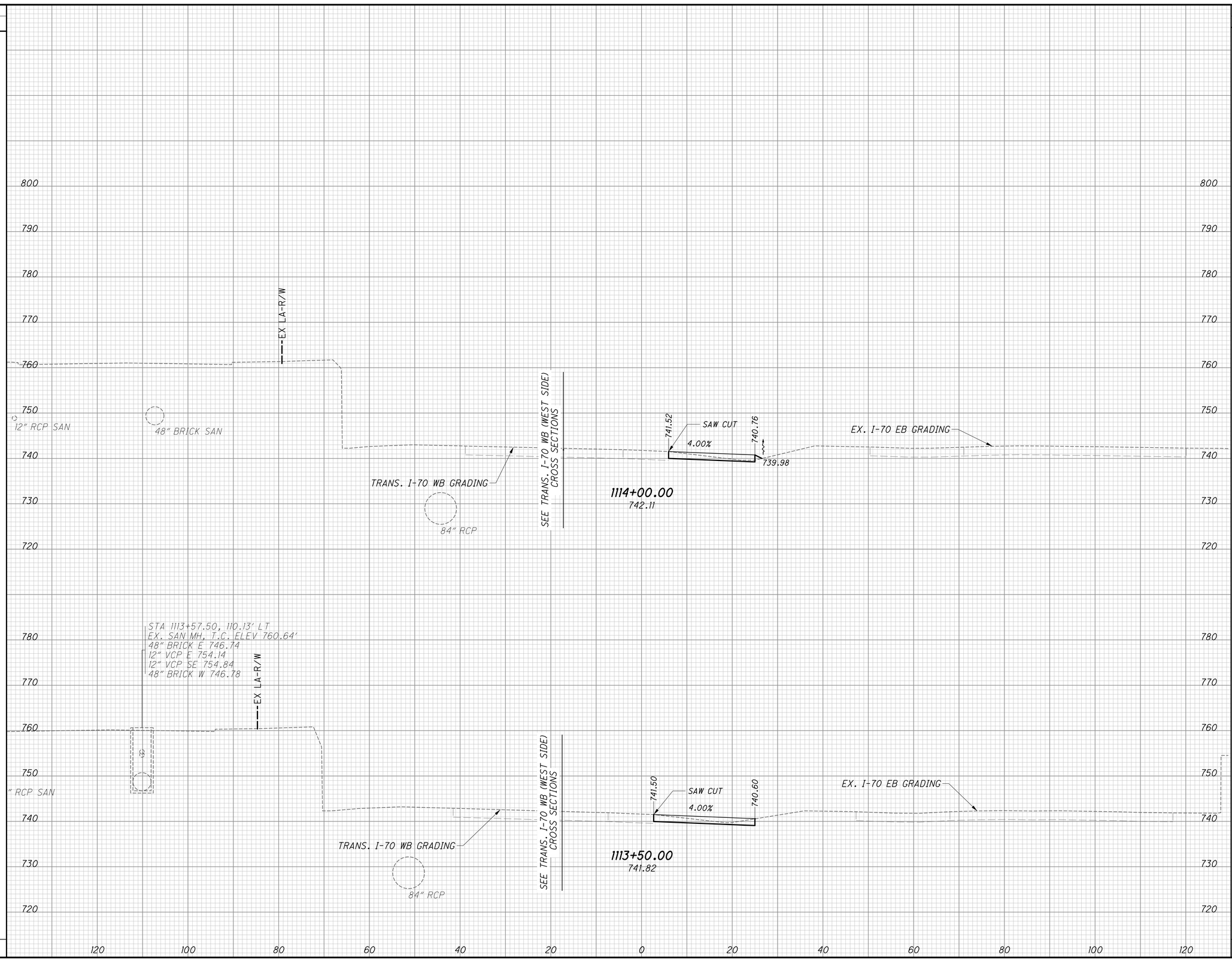

END AREA CUT	END AREA FILL	VOLUME CUT	VOLUME FILL
15	1		
31	1		
21	0		
39	0		
70	1		

CALCULATED JAH
CHECKED JML

MOT - CROSS SECTIONS TR-1D (TEMP I-70 EB)
STA. 1113+50.00 TO STA. 1114+00.00

FRA-70-14.54

265
2317

PLOT.CEL

ms consultants, inc.
msconsultants.com

Ohio DOT Workspace
70\71 East Interchange 2E

www.msconsultants.com

Batchplot Spec: \\msconsultants.com\Files\production\03\60\06634.2E\standards\plotdrv\batchplt.SPC
Pen Table: \\msconsultants.com\Files\Standards\usth\ohdot\V8\ms\plotting\pen\V8i_ms_std.tbl
Plot Driver: \\msconsultants.com\Files\Standards\usth\ohdot\v8i\ms\plotting\PDF.pltcfg
PDF: ohdotV8i
DGN: 60-06634_2E_Columbus

Model: XS_SHEET_1114+50.00_TO_1115+00.00
Printed: 9/28/2018 @ 10:16:43 AM
File: N:\03\60\06634_2E\mot\sheets\77370X560008.dgn
View: SHEET
By: kryan

34" x 22"

SEEDING END WIDTH	SEEDING SQ. YDS.
	4
	19
	14
	33

END AREA CUT	END AREA FILL	VOLUME CUT	VOLUME FILL
12	2		
		23	4
13	2		
		26	3
		49	7

CALCULATED JAH
CHECKED JML

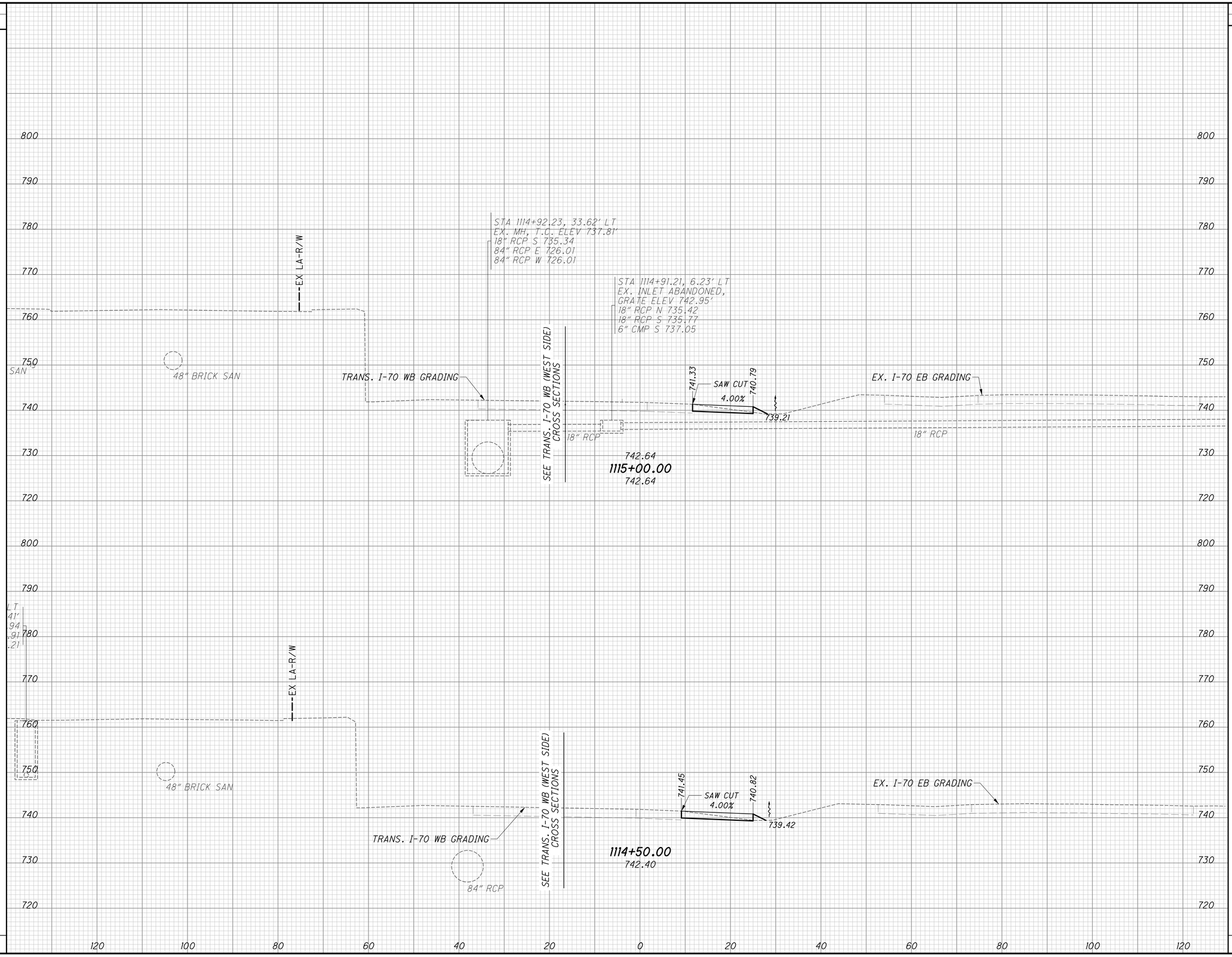

MOT - CROSS SECTIONS TR-1D (TEMP I-70 EB)
STA. 1114+50.00 TO STA. 1115+00.00

FRA-70-14.54

266
2317

ms consultants, inc.

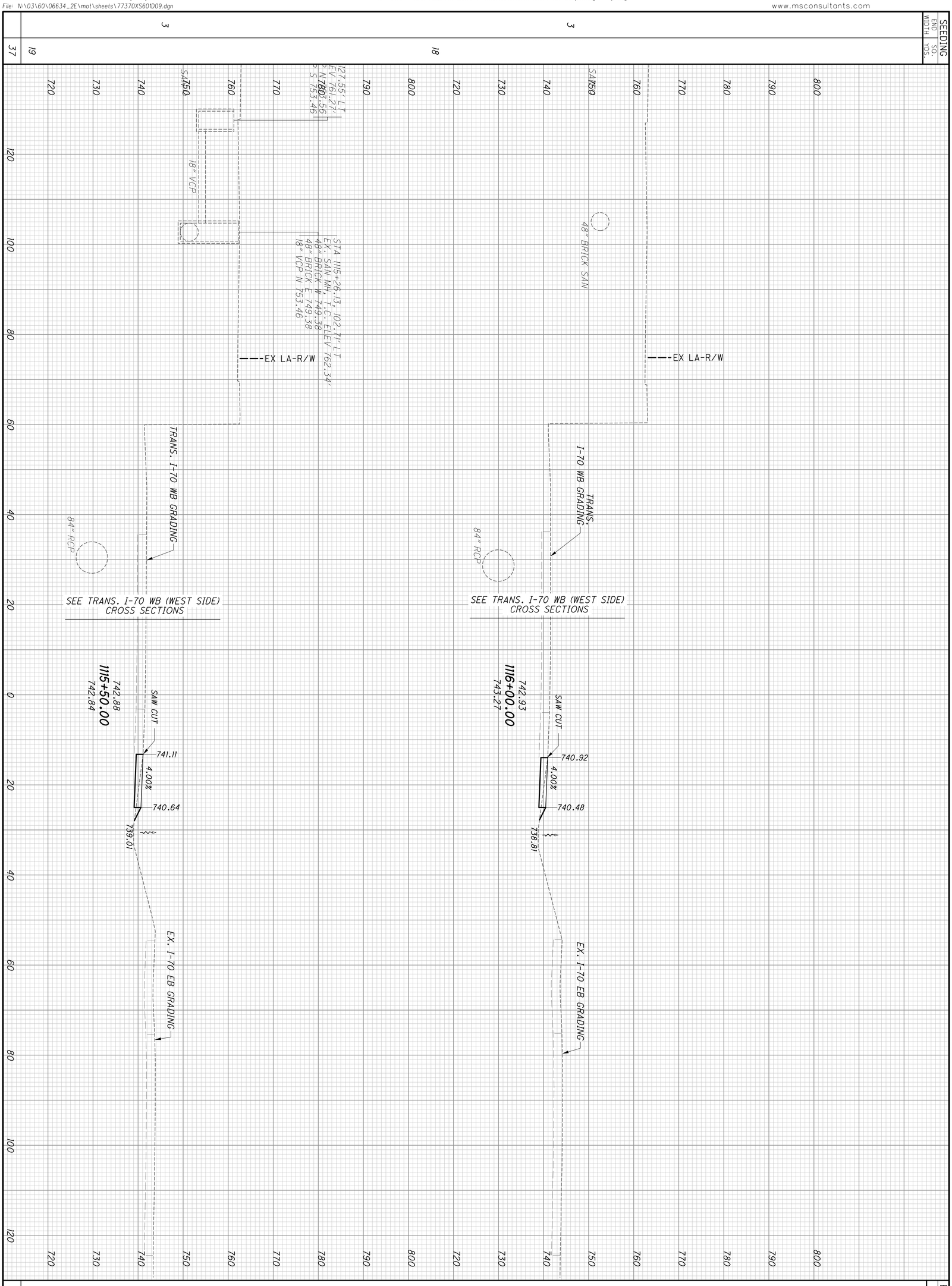

MOT - CROSS SECTIONS TR-1D (TEMP I-70 EB)
STA. 1115+50.00 TO STA. 1116+00.00

CALCULATED JAH
CHECKED JML

ms consultants, inc.

PLOT.CEL

ms consultants, inc.
msconsultants.com

Ohio DOT Workspace
70\71 East Interchange 2E

www.msconsultants.com

0 1" 0.5"

Batchplot Spec: \\msconsultants.com\files\production\03\60\06634.2E\standards\plotdrv\batchplt.SPC
Pen Table: \\msconsultants.com\files\Standards\usth\ohdot\V8i\ms\plotting\pen\V8i_ms_std.tbl PDF: ohdotV8i
Plot Driver: \\msconsultants.com\files\Standards\usth\ohdot\V8i\ms\plotting\PDF.plt PDF: 60-06634_2E_Columbus

34" x 22"

Model: XS_SHEET_1116-50.00_TO_1117+00.00 View: SHEET
Printed: 9/28/2018 @ 10:16:46 AM By: kryan
File: N:\03\60\06634_2E\mot\sheets\T7370X560100.dgn

SEEDING	
END WIDTH	SQ. YDS.
1	
3	
12	
17	
29	

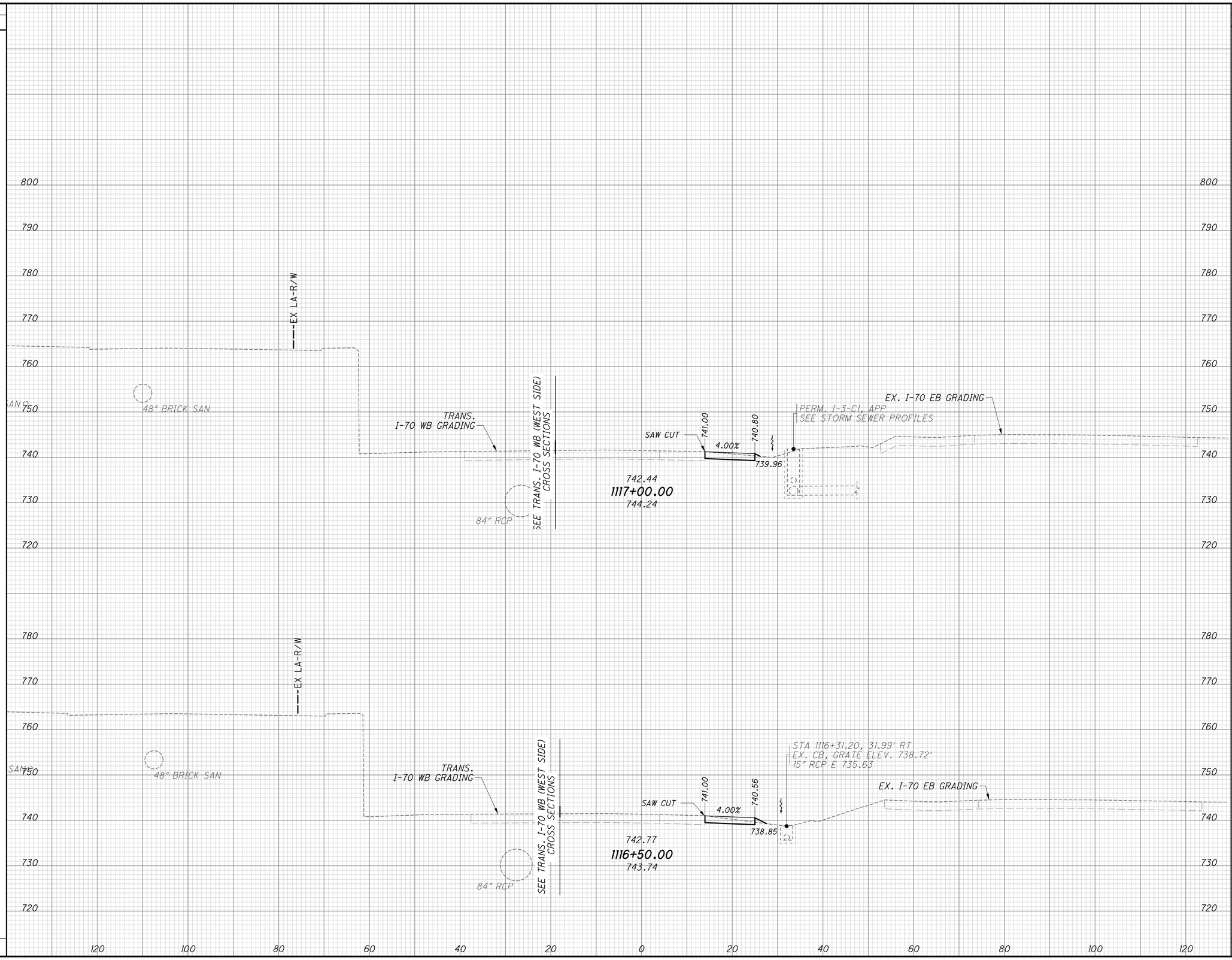

END AREA		VOLUME	
CUT	FILL	CUT	FILL
14	0		
11	1		
24	1		
21	2		
45	3		

CALCULATED JAH
CHECKED JML

MOT - CROSS SECTIONS TR-1D (TEMP I-70 EB)
STA. 1116+50.00 TO STA. 1117+00.00

FRA-70-14.54

268
2317

PLOT.CEL

ms consultants, inc.
msconsultants.com

www.msconsultants.com
Ohio DOT Workspace
70\71 East Interchange 2E
PCF: 60-06634_2E_Columbus
ODF: ohdot\V8i

Batchplot Spec: \\vnsconsultants.com\Files\production\03\60\06634_2E\standards\plotdrv\batchplt.spc
Pen Table: N:\03\60\06634_2E\standards\tables\V8i_ms_std_NoClouds.tbl
Plot Driver: \\vnsconsultants.com\Files\Standards\ustn\ohdot\v8i\ms\plotting\PDF.pltcfg

Model: Sheet
Printed: 2/12/2019 @ 9:58:24 AM
File: N:\03\60\06634_2E\mot\sheets\77370MT602001.dgn
View: FENCE_VIEW1
By: awhite

34" x 22"

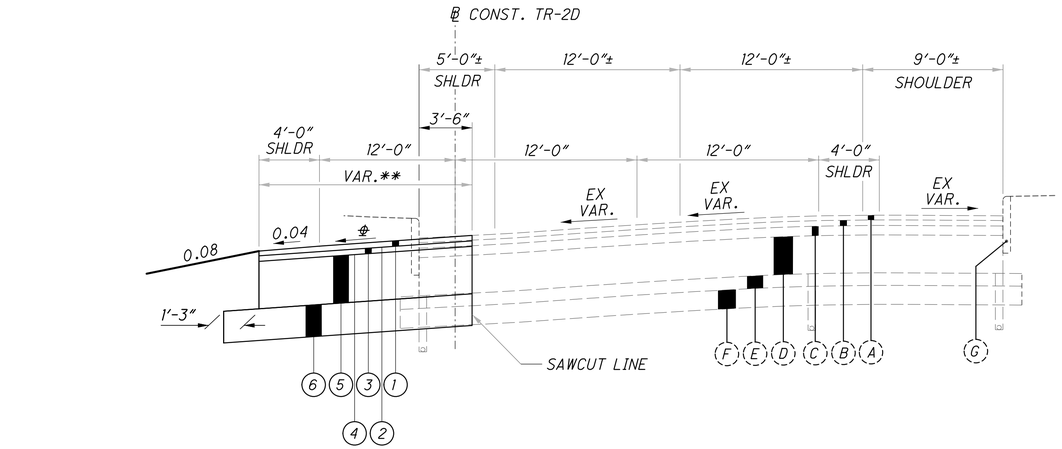

SUPERELEVATION SECTION - PAVEMENT FOR MAINTAINING TRAFFIC, CLASS A - TR-2D

SECTION APPLIES:
STA. 1367+29.41 TO STA. 1369+44.32 = 214.91 LIN. FT.
**PAVEMENT WIDENING VARIES FROM 4'-0" TO 34'-0".

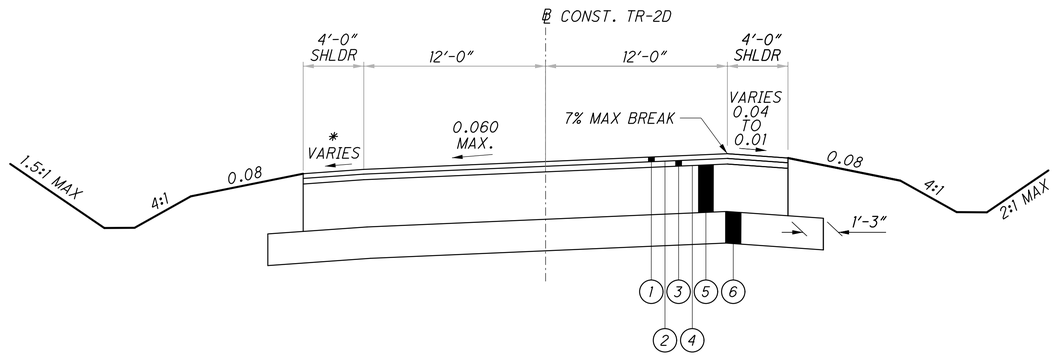

SUPERELEVATED SECTION - PAVEMENT FOR MAINTAINING TRAFFIC, CLASS A - TR-2D

SECTION APPLIES:
STA. 1365+85.99 TO STA. 1367+29.41 = 143.42 LIN. FT.

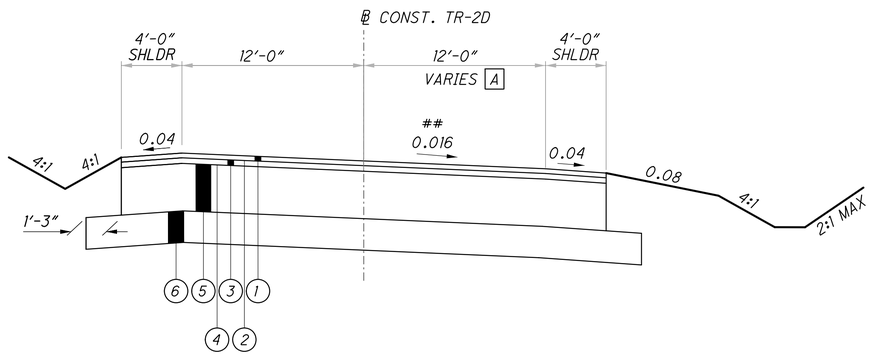

NORMAL SECTION - PAVEMENT FOR MAINTAINING TRAFFIC, CLASS A - TR-2D

SECTION APPLIES:
STA. 1356+00.00 TO STA. 1357+04.91 = 104.91 LIN. FT.
- PAVEMENT SLOPED IN OPPOSITE DIRECTION
STA. 1357+04.91 TO STA. 1365+85.99 = 881.08 LIN. FT.

LEGEND FOR EXISTING PAVEMENT

(A) 1.5" ASPHALT CONCRETE SURFACE COURSE, TYPE 1H

(B) 1.75" ASPHALT CONCRETE INTERMEDIATE COURSE, TYPE 2, PG64-28

(C) 3" BITUMINOUS AGGREGATE BASE, PG64-22

(D) 12" BITUMINOUS AGGREGATE BASE, PG64-22

(E) 4" ASPHALT TREATED FREE DRAINING BASE

(F) 6" AGGREGATE BASE

(G) CURB, TYPE 6

LEGEND FOR: ITEM 615 - PAVEMENT FOR MAINTAINING TRAFFIC, CLASS A, AS PER PLAN

(1) ITEM 448 - 1.5" ASPHALT CONCRETE SURFACE, TYPE 1, PG64-22

(2) ITEM 407 - TACK COAT FOR INTERMEDIATE COURSE (0.04 GAL/SY)

(3) ITEM 448 - 1.75" ASPHALT CONCRETE INTERMEDIATE COURSE, TYPE 2, PG64-22

(4) ITEM 407 - TACK COAT (0.075 GAL/SY)

(5) ITEM 302 - 7" ASPHALT CONCRETE BASE, PG64-22

(6) ITEM 304 - 6" AGGREGATE BASE

[A] STA. 1359+72.56 TO STA. 1361+96.38 = 12.00' TO 38.56'

* 0.04 OR RATE OF SUPERELEVATION IF GREATER

℄ MATCH EXISTING CROSS SLOPE

± UNLESS OTHERWISE SHOWN IN CROSS SECTIONS

CALCULATED JAH
CHECKED JML

MOT - TYPICAL SECTIONS - TR-2D (TEMP I-70 EB TO I-71 NB)
STA. 1356+00.00 TO STA. 1369+44.32

FRA-70-14.54

ms consultants, inc.

PLOT.CEL

ms consultants, inc.
msconsultants.com

Ohio DOT Workspace
70\71 East Interchange 2E
www.msconsultants.com

Batchplot Spec: \\msconsultants.com\files\production\03\60\06634_2E\standards\plotdr\batchplt.spc
Pen Table: \\msconsultants.com\files\Standards\ustn\ohdot\V8i\ms\plotting\pen\V8i_ms_std.tbl
Plot Driver: \\msconsultants.com\files\Standards\ustn\ohdot\v8i\ms\plotting\PDF.pltcfg
PDF: ohdotV8i
PCF: 60-06634_2E_Columbus

Model: Sheet
Printed: 9/28/2018 @ 10:17:01 AM
File: N:\03\60\06634_2E\mot\sheets\773706MP602002.dgn
View: FENCE_VIEW1
By: kryan

34" x 22"

LEGEND

TEMP. PAVEMENT PLACED DURING THIS PHASE

TEMP. PAVEMENT PLACED PRIOR TO THIS PHASE

P.I. Sta. 1360+77.84
Δ = 35° 33′ 46″ (LT)
Dc = 6° 00′ 00″
R = 954.93′
T = 306.25′
L = 592.71′
E = 47.91′
C = 583.25′
C.B. = N 63° 35′ 15″ E
e (max) = 1.6%
N = 712,340.27
E = 1,832,573.55

P.I. Sta. 1368+60.35
Δ = 38° 11′ 07″ (LT)
Dc = 9° 00′ 00″
R = 636.62′
T = 220.36′
L = 424.28′
E = 37.06′
C = 416.47′
C.B. = N 26° 42′ 48″ E
e (max) = *
N = 712,899.55
E = 1,833,148.78

℄ CONSTR. TR-1B

RAMP P2

℄ CONSTR. TR-2D

PT Sta. 1363+64.30

PC Sta. 1366+39.99

PT Sta. 1370+64.27

POT Sta. 1371+56.79

N 45° 48′ 21″ E

N 7° 37′ 14″ E

SAWCUT 2′ INSIDE EOS

DND

RTG

RAMP TO EX. I-71 NB

* BASELINE ESTABLISHED FOR CONSTUCTION ONLY. CROSS SLOPES SHALL MATCH ADJACENT PAVEMENT CROSS SLOPES, UNLESS SPECIFIED DIFFERENTLY IN THE CROSS SECTIONS.

762.93 763.25 763.62 764.05 764.54 765.08 765.65 766.79 767.93 769.02

GRAPHIC GRADE

GRAPHIC GRADE

P.V.I. STA 1365+59.33
ELEV = 763.58′
131.34′ VC
K = 108

STA 1364+93.66
ELEV = 762.89

STA 1366+25.00
ELEV = 765.08′

ELEV = 767.93′

+1.06 %

+2.28 %

+2.28 %

+2.28 %

EXISTING TR-2D PROFILE

PROPOSED TR-2D PROFILE

780
770
760
750

761.95 762.07 762.33 762.27 762.57 762.96 763.37 762.30 765.94 767.65 768.45 769.45 769.95 770.52 761.77 748.11 748.12 747.48 756.35

1363+00 1364+00 1365+00 1366+00 1367+00 1368+00 1369+00 1370+00 1371+00

TEMP I-70 EB TO I-71 NB
& PROFILE TR-2D
MOT - PLAN
STA. 1362+50 TO STA. 1369+42

HORIZONTAL SCALE IN FEET
0 20 40 80

CALCULATED JAH
CHECKED JML

FRA-70-14.54

270
2317

ms consultants, inc.

PLOT.CEL

ms consultants, inc.
msconsultants.com

www.msconsultants.com

Ohio DOT Workspace
70\71 East Interchange 2E

0 0.5" 1"

PDF: ohdot\V8i
PDF: 60-06634_2E_Columbus

34" x 22"

Batchplot Spec: \\msconsultants.com\files\production\Q3\60\06634_2E\standards\ohdot\v8i\batchplt.spc
Pen Table: \\msconsultants.com\files\Standards\usth\ohdot\V8i\ms\plotting\pen\V8i_ms_std.tbl
Plot Driver: \\msconsultants.com\files\Standards\usth\ohdot\v8i\ms\plotting\PDF.pltcfg

Model: XS_SHEET_1364+00.00_TO_1364+50.00_FENCE_VIEW1
Printed: 9/28/2018 @ 10:17:04 AM By: kryan
File: N:\03\60\06634_2E\mot\sheets\773705602009.dgn

SEEDING	
END WIDTH	SQ. YDS.
38	
	214
39	
	225
	439

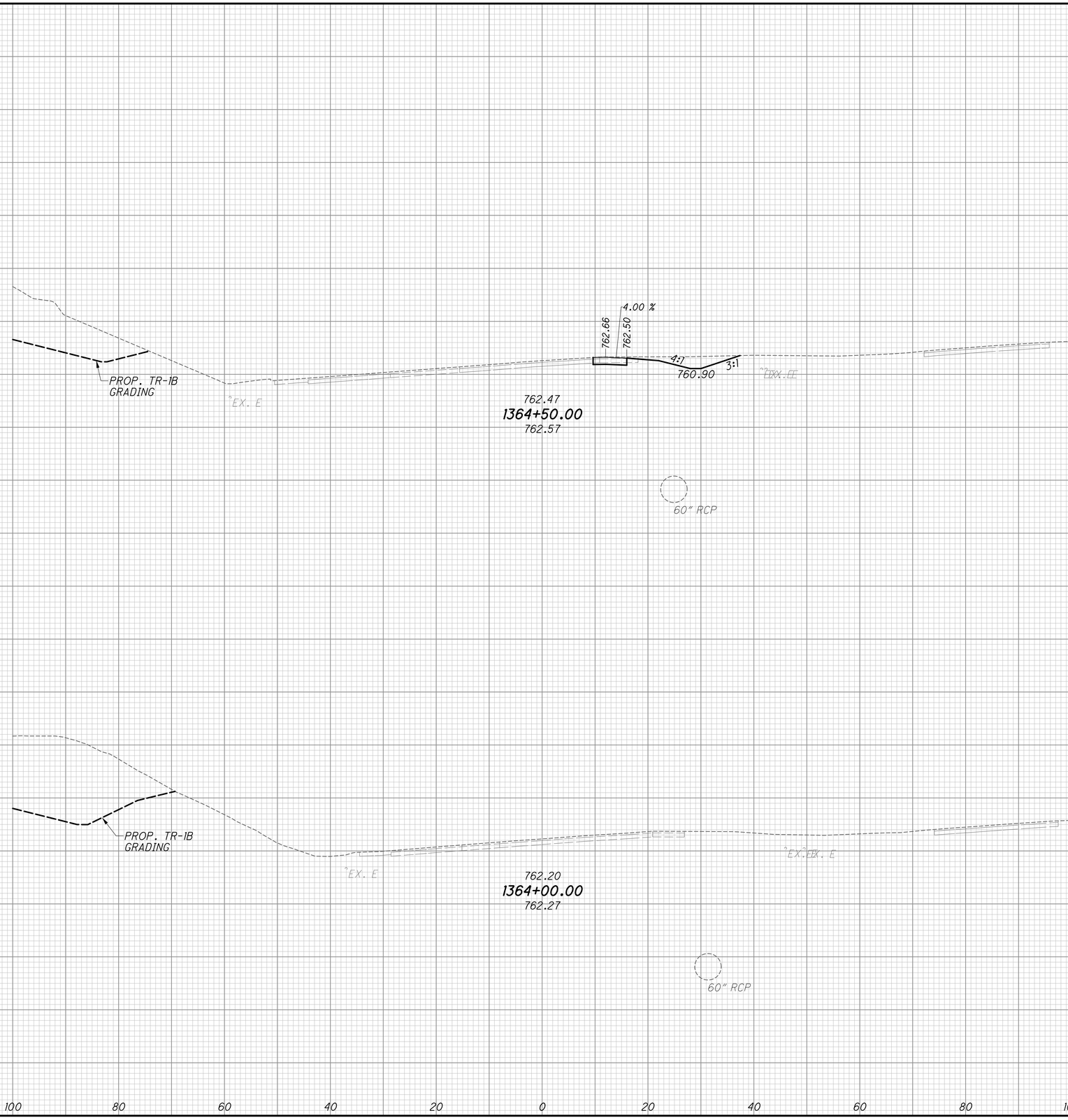

END AREA		VOLUME	
CUT	FILL	CUT	FILL
81	7	162	14
94	8	192	14
		354	28

CALCULATED JAH
CHECKED JML

MOT - CROSS SECTIONS TR-2D (TEMP I-70 EB TO I-71 NB)
STA. 1364+00.00 TO STA. 1364+50.00

FRA-70-14.54

271
2317

ms consultants, inc.

PLOT.CEL

ms consultants, inc.
msconsultants.com

www.msconsultants.com

Ohio DOT Workspace
70\71 East Interchange 2E

0 0.5" 1"

Batchplot Spec: \\msconsultants.com\files\production\03\60\06634_2E\standards\plotdrv\batchplt.spc
Pen Table: \\msconsultants.com\files\Standards\usth\ohdot\V8i\ms\plotting\pen\V8i_ms_std.tbl PCF: ohdotV8i
Plot Driver: \\msconsultants.com\files\Standards\usth\ohdot\V8i\ms\plotting\PDF.pltcfg PCF: 60-06634_2E_Columbus

Model: XS_SHEET_1365-00.00_TO_1365-50.00 FENCE_VIEW1
Printed: 9/28/2018 @ 10:17:06 AM By: kryan
File: N:\03\60\06634_2E\mot\sheets\773705X602010.dgn

34" x 22"

SEEDING END WIDTH	SEEDING SQ. YDS.
41	217
37	208
	425

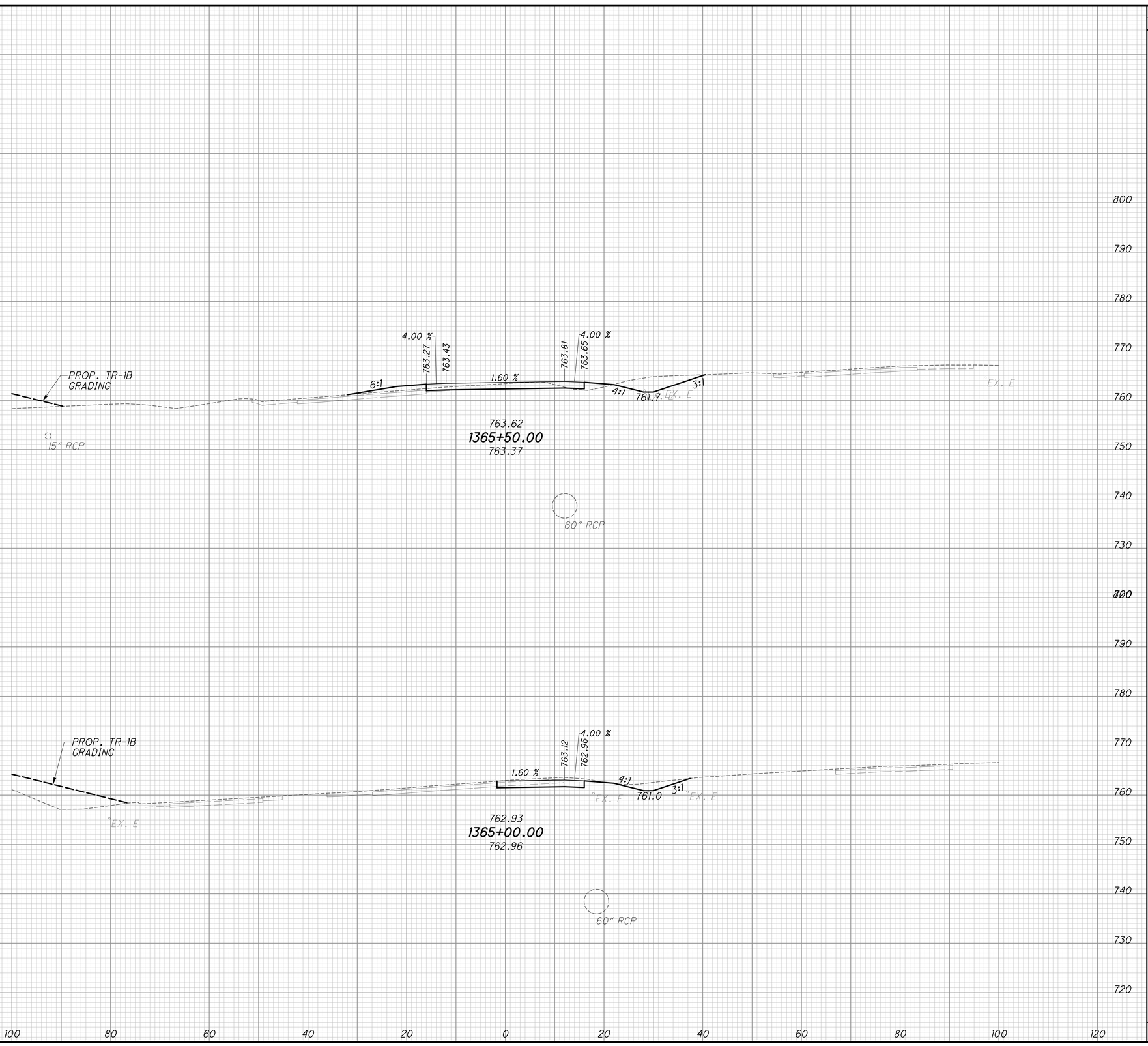

END AREA CUT	END AREA FILL	VOLUME CUT	VOLUME FILL
56	16		
53	8		
		101	22
		124	14
		225	36

CALCULATED JAH
CHECKED JML

MOT - CROSS SECTIONS TR-2D (TEMP I-70 EB TO I-71 NB)
STA. 1365+00.00 TO STA. 1365+50.00

FRA-70-14.54

272
2317

PLOT.CEL

ms consultants, inc.
msconsultants.com

www.msconsultants.com

Ohio DOT Workspace
70\71 East Interchange 2E

1" = 0.5"

PDF: ohdot\V8i
DGN: 60-06634_2E_Columbus

Batchplot Spec: \\vmsconsultants.com\files\production\03\60\06634_2E\standards\plotdir\batchplt.spc
Pen Table: \\vmsconsultants.com\files\Standards\usth\ohdot\V8i\ms\plotting\pen\V8i_ms_std.tbl
Plot Driver: \\vmsconsultants.com\files\Standards\usth\ohdot\v8i\ms\plotting\PDF.pltcfg

Model: XS_SHEET_1366-00.00_TO_1366-50.00_MOT_FENCE_VIEW1
Printed: 9/28/2018 @ 10:17:08 AM By: kryan
File: N:\03\60\06634_2E\mot\sheets\773705X60201f.dgn

34" x 22"

SEEDING	
END WIDTH	SQ. YDS.
53	
	269
44	
	236
	505

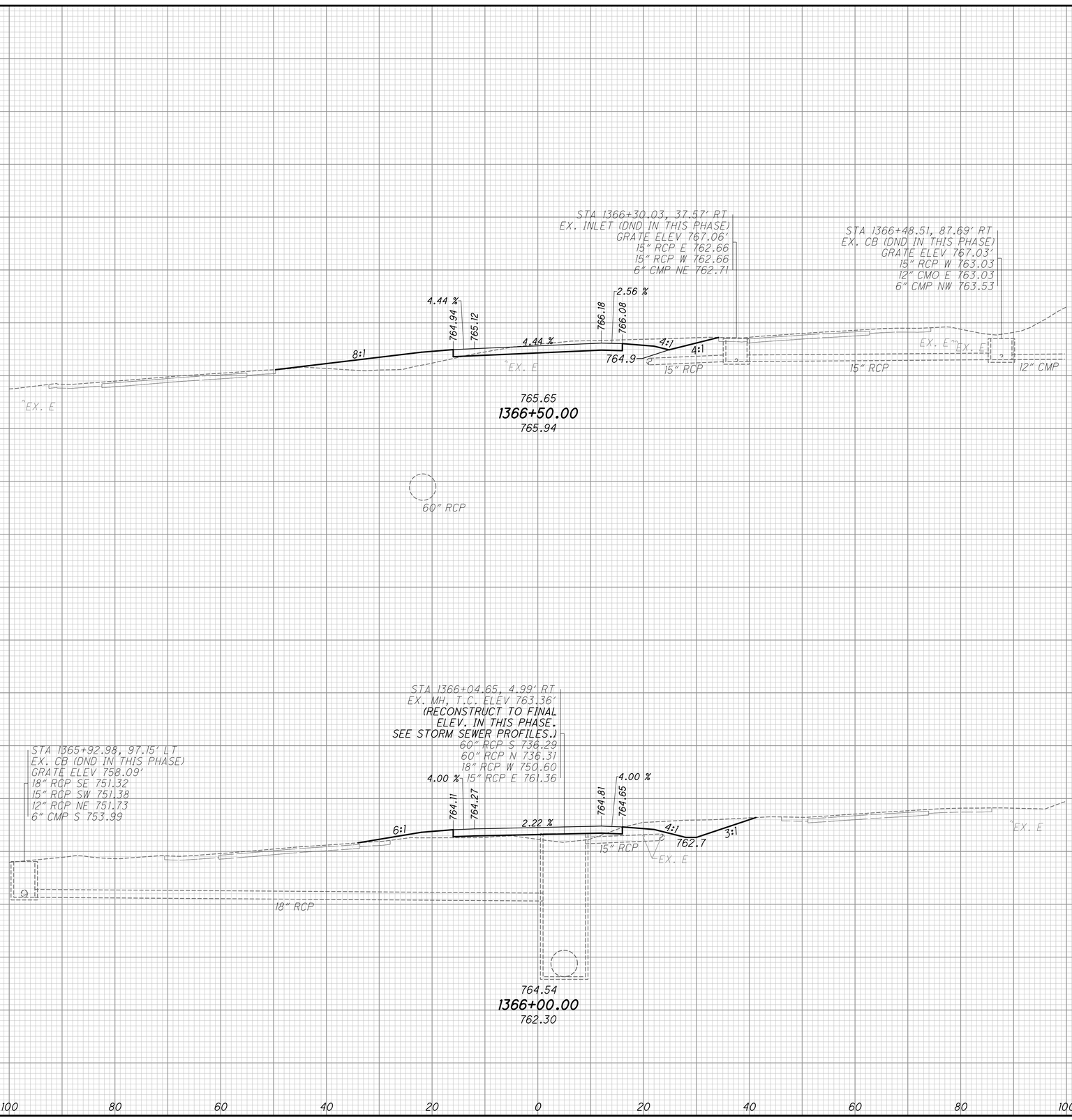

END AREA	
CUT	FILL
65	55
45	34
94	46
196	128

VOLUME	
CUT	FILL
102	82

CALCULATED JAH
CHECKED JML

MOT - CROSS SECTIONS TR-2D (TEMP I-70 EB TO I-71 NB)
STA. 1366+00.00 TO STA. 1366+50.00

FRA-70-14.54

273
2317

ms consultants, inc.

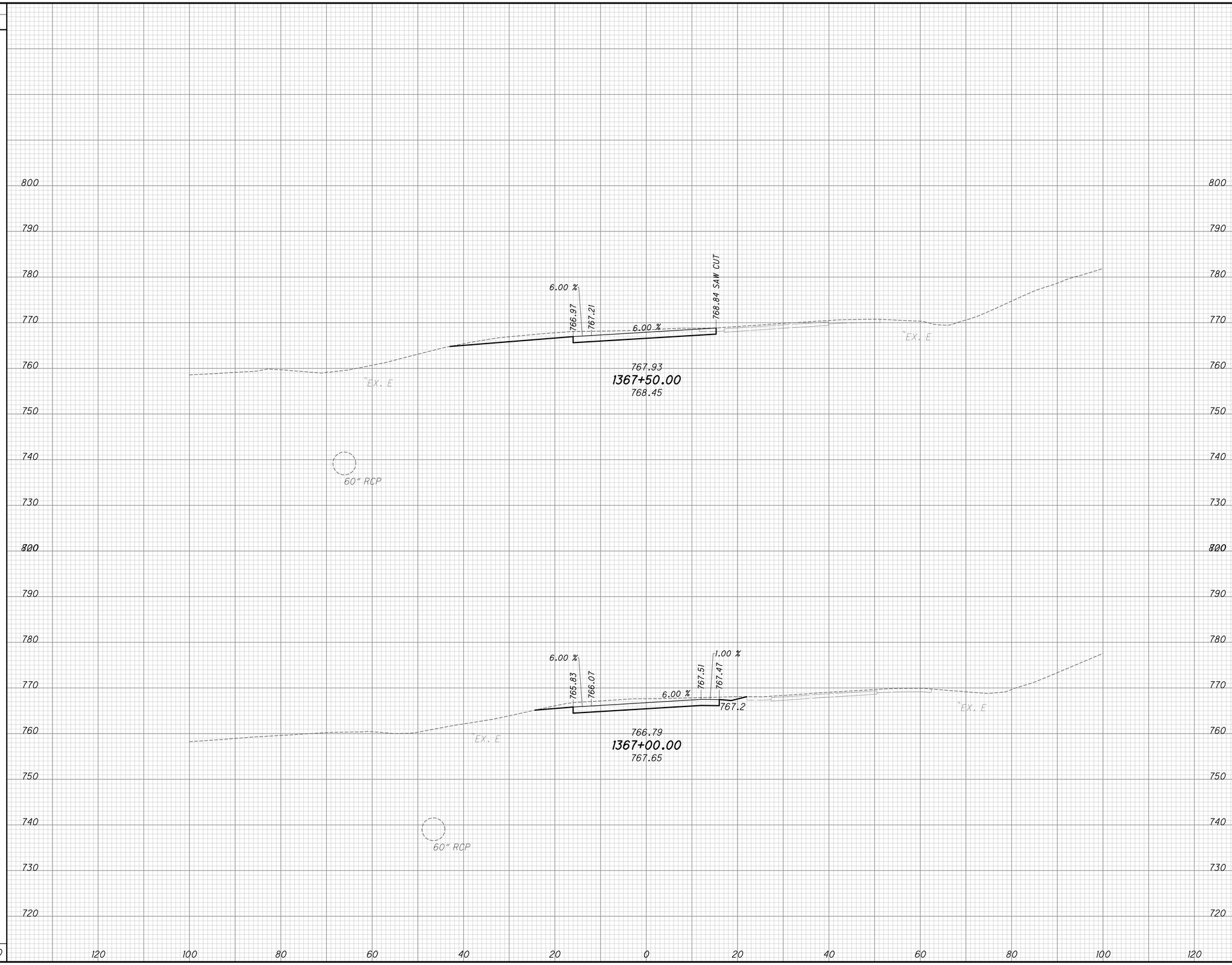

SEEDING END WIDTH	SEEDING SQ. YDS.	END AREA CUT	END AREA FILL	VOLUME CUT	VOLUME FILL
27		84	0		
	114			147	0
14		75	0		
	186			130	51
	300			277	51

CALCULATED JAH
CHECKED JML

MOT - CROSS SECTIONS TR-2D (TEMP I-70 EB TO I-71 NB)
STA. 1367+00.00 TO STA. 1367+50.00

FRA-70-14.54

274
2317

ms consultants, inc.

PLOT.CEL

ms consultants, inc.
msconsultants.com

Ohio DOT Workspace
70\71 East Interchange 2E
www.msconsultants.com

Batchplot Spec: \\msconsultants.com\files\production\03\60\06634_2E\standards\plotdrv\batchplt.spc
Pen Table: \\msconsultants.com\files\Standards\ustn\ohdot\V8i\ms\plotting\pen\V8i_ms_std.tbl
Plot Driver: \\msconsultants.com\files\Standards\ustn\ohdot\v8i\ms\plotting\PDF.pltcfg

34" x 22"

Model: XS_SHEET_1367+00.00_TO_1367+50.00 FENCE_VIEW1
Printed: 9/28/2018 @ 10:17:09 AM By: kryan
File: N:\03\60\06634_2E\mot\sheets\77370XS602D12.dgn

PLOT.CEL

ms consultants, inc.
msconsultants.com

www.msconsultants.com

Ohio DOT Workspace
70\71 East Interchange 2E

0 0.5" 1"

34" x 22"

Batchplot Spec: \\vmsconsultants.com\files\production\03\60\06634_2E\standards\plotdrv\batchplt.spc
Pen Table: \\vmsconsultants.com\files\Standards\ustn\ohdot\V8i\ms\plotting\pen\V8i_ms_std_PDF: ohdotV8i
Plot Driver: \\vmsconsultants.com\files\Standards\ustn\ohdot\V8i\ms\plotting\PDF: 60-06634_2E_Columbus

Model: XS_SHEET_1368-00.00_TO_1368-50.00 FENCE_VIEW1
Printed: 9/28/2018 @ 10:17:11 AM By: kryan
File: N:\03\60\06634_2E\mot\sheets\773705X602013.dgn

SEEDING END WIDTH	SEEDING SQ. YDS.
20	164
39	183
	347

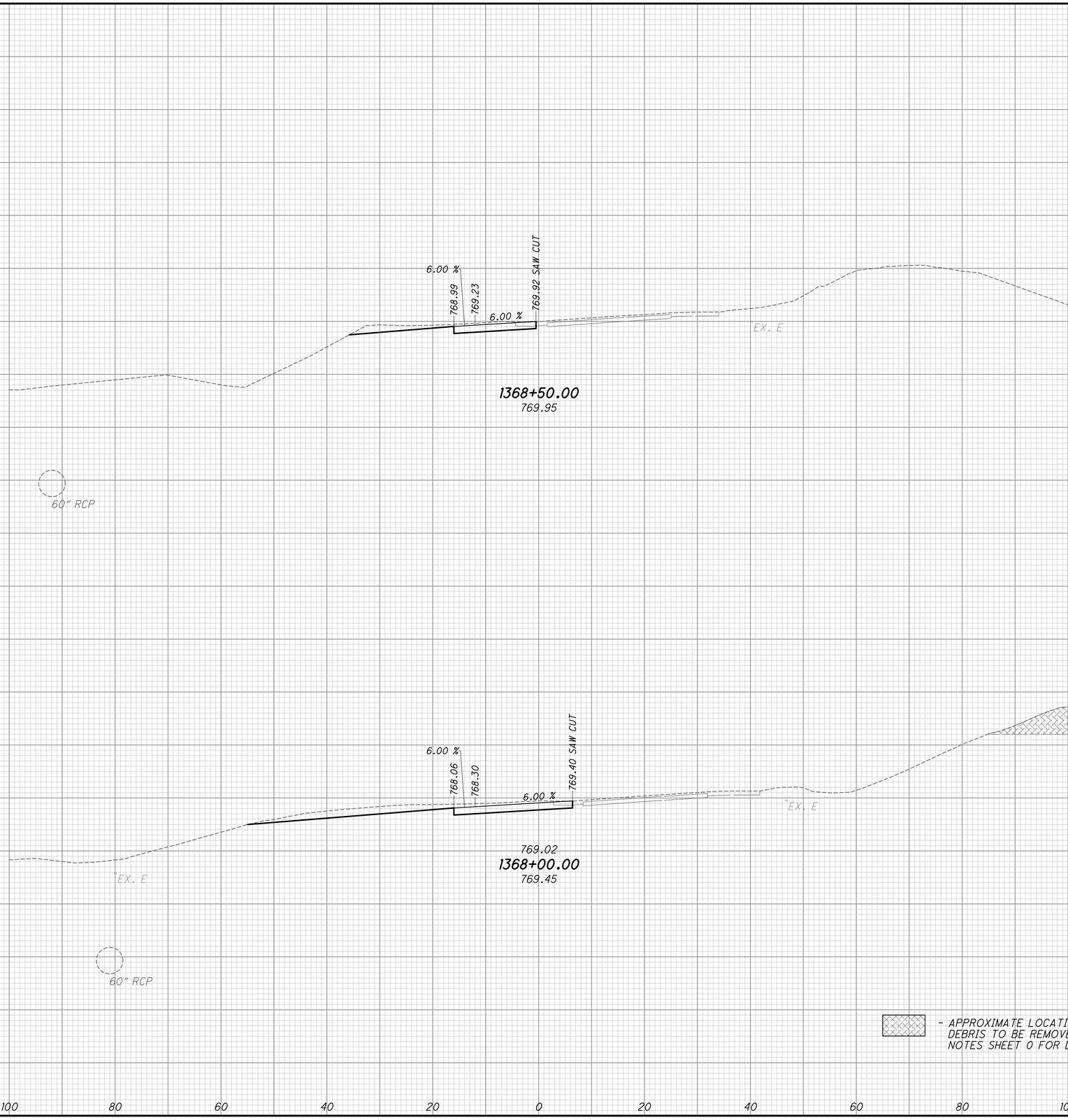

END AREA CUT	END AREA FILL	VOLUME CUT	VOLUME FILL
42	0		
81	0		
		114	0
		153	0
		267	0

CALCULATED JAH
CHECKED JML

MOT - CROSS SECTIONS TR-2D (TEMP I-70 EB TO I-71 NB)
STA. 1368+00.00 TO STA. 1368+50.00

FRA-70-14.54

275
2317

ms consultants, inc.

34" x 22"

Model: XS_SHEET_1369+00.00 View: FENCE_VIEW1
Printed: 9/28/2018 @ 10:17:13 AM By: kryan
File: N:\03\60\06634_2E\mot\sheets\77370XS602D14.dgn

Batchplot Spec: \\msconsultants.com\files\production\03\60\06634_2E\standards\plotdrv\batchplt.spf
Pen Table: \\msconsultants.com\files\Standards\ustn\ohdot\V8i\ms\plotting\pen\V8i_ms_std.tbl
Plot Driver: \\msconsultants.com\files\Standards\ustn\ohdot\v8i\ms\plotting\PDF.pltcfg

0 1" 0.5"

PCF: ohdotV8i
PCF: 60-06634_2E_Columbus

Ohio DOT Workspace
70\71 East Interchange 2E

ms consultants, inc.
msconsultants.com

PLOT.CEL

www.msconsultants.com

SEEDING	END WIDTH	SQ. YDS.
	49	192

710 720 730 740 750 760 770 780 790

120 100 80 60 40 20 0 20 40 60 80 100 120

60" RCP

769.52

6.00%

769.76

770.05 SAW CUT

1369+00.00

770.52

END AREA	CUT	FILL
	73	0

VOLUME	CUT	FILL
	106	0

276
2317

FRA-70-14.54

MOT - CROSS SECTIONS TR-2D (TEMP I-70 EB TO I-71 NB)
STA. 1369+00.00

CALCULATED JAH
CHECKED JML

ms consultants, inc.

PLOT.CEL

ms consultants, inc.
msconsultants.com

www.msconsultants.com

Ohio DOT Workspace
70\71 East Interchange 2E

1" 0.5" 0

PCF: ohdot\V8i
PCF: 60-06634_2E_Columbus

Batchplot Spec: \\msconsultants.com\files\production\Q3\60\06634_2E\standards\plotdr\batchplt.spc
Pen Table: \\msconsultants.com\files\Standards\ustn\ohdot\V8i\ms\plotting\pen\V8i_ms_std.tbl
Plot Driver: \\msconsultants.com\files\Standards\ustn\ohdot\v8i\ms\plotting\PDF.pltcfg

Model: Sheet View: FENCE_VIEW1
Printed: 9/28/2018 @ 10:17:15 AM By: kryan
File: N:\Q3\60\06634_2E\mot\sheets\773708E602001.dgn

34" x 22"

SUPERELEVATION TABLE

P.I. STA. 1368+60.35 | Dc = 9°00'00"

LEFT SIDE					CENTERLINE CONTROL		RIGHT SIDE					
EDGE ELEVATION	TRANSITION RATE	ELEVATION CORRECTION	CROSS SLOPE	WIDTH	STATION	PROFILE GRADE	WIDTH	CROSS SLOPE	ELEVATION CORRECTON	TRANSITION RATE	EDGE ELEVATION	REMARKS
762.00		-0.19	-0.0160	12.00	1363+75.00 R 1	762.19	12.00	0.0160	0.19		762.38	
762.01		-0.19	-0.0160	12.00	1364+00.00 R 1	762.20	12.00	0.0160	0.19		762.39	
762.13		-0.19	-0.0160	12.00	1364+25.00 R 1	762.32	12.00	0.0160	0.19		762.51	
762.28		-0.19	-0.0160	12.00	1364+50.00 R 1	762.47	12.00	0.0160	0.19		762.66	
762.48		-0.19	-0.0160	12.00	1364+75.00 R 1	762.67	12.00	0.0160	0.19		762.86	
762.74		-0.19	-0.0160	12.00	1365+00.00 R 1	762.93	12.00	0.0160	0.19		763.12	
763.06		-0.19	-0.0160	12.00	1365+25.00 R 1	763.25	12.00	0.0160	0.19		763.44	
763.43		-0.19	-0.0160	12.00	1365+50.00 R 1	763.62	12.00	0.0160	0.19		763.81	
763.86		-0.19	-0.0160	12.00	1365+75.00 R 1	764.05	12.00	0.0160	0.19		764.24	
764.07		-0.19	-0.0160	12.00	1365+85.99 R 1	764.26	12.00	0.0160	0.19		764.45	RC
764.27		-0.27	-0.0222	12.00	1366+00.00 R 1	764.54	12.00	0.0222	0.27		764.81	
764.68		-0.40	-0.0333	12.00	1366+25.00 R 1	765.08	12.00	0.0333	0.40		765.48	
764.94		-0.48	-0.0400	12.00	1366+39.99 R 1	765.42	12.00	0.0400	0.48	192:1	765.90	PC
765.12		-0.53	-0.0444	12.00	1366+50.00 R 1	765.65	12.00	0.0444	0.53		766.18	
765.55		-0.67	-0.0556	12.00	1366+75.00 R 1	766.22	12.00	0.0556	0.67		766.89	
765.73		-0.72	-0.0600	12.00	1366+84.99 R 1	766.45	12.00	0.0600	0.72		767.17	FS
766.07		-0.72	-0.0600	12.00	1367+00.00 R 1	766.79	12.00	0.0600	0.72		767.51	
766.64		-0.72	-0.0600	12.00	1367+25.00 R 1	767.36	12.00	0.0600	0.72		768.08	
767.21		-0.72	-0.0600	12.00	1367+50.00 R 1	767.93	-	-	-		EX	
-		-	-	-	-	-	-	-	-		-	
768.30		-0.72	-0.0600	12.00	1368+00.00 R 1	769.02	-	-	-		EX	
-		-	-	-	-	-	-	-	-		-	
769.23		-0.72	-0.0600	12.00	1368+50.00 R 1	769.95	-	-	-		EX	
-		-	-	-	-	-	-	-	-		-	
769.76		-0.72	-0.0600	12.00	1369+00.00 R 1	EX	-	-	-		EX	
-		-	-	-	-	-	-	-	-		-	

CALCULATED JAH
CHECKED JML

MOT - SUPERELEVATION TABLE TR-2D
(TEMP 1-70 EB TO I-71 NB)

FRA-70-14.54

277
2317

ms consultants, inc.

PLOT.CEL

ms consultants, inc.
msconsultants.com

www.msconsultants.com
70\71 East Interchange 2E
Ohio DOT Workspace

PCF: 60-06634_2E_Columbus
CDF: ohdot\V8i

Batchplot Spec: \\msconsultants.com\files\production\03\60\06634_2E\standards\plotdrv\batchplt.spc
Pen Table: N:\03\60\06634_2E\standards\tables\V8i_ms_std_NoClouds.tbl
Plot Driver: \\msconsultants.com\files\Standards\usinfra\ohdot\v8i\ms\plotting\PDF.pltcfg

Model: Sheet
Printed: 2/12/2019 @ 9:58:31 AM
File: N:\03\60\06634_2E\mot\sheets\v7737OMT602A01.dgn
View: FENCE_VIEW1
By: awhite

34" x 22"

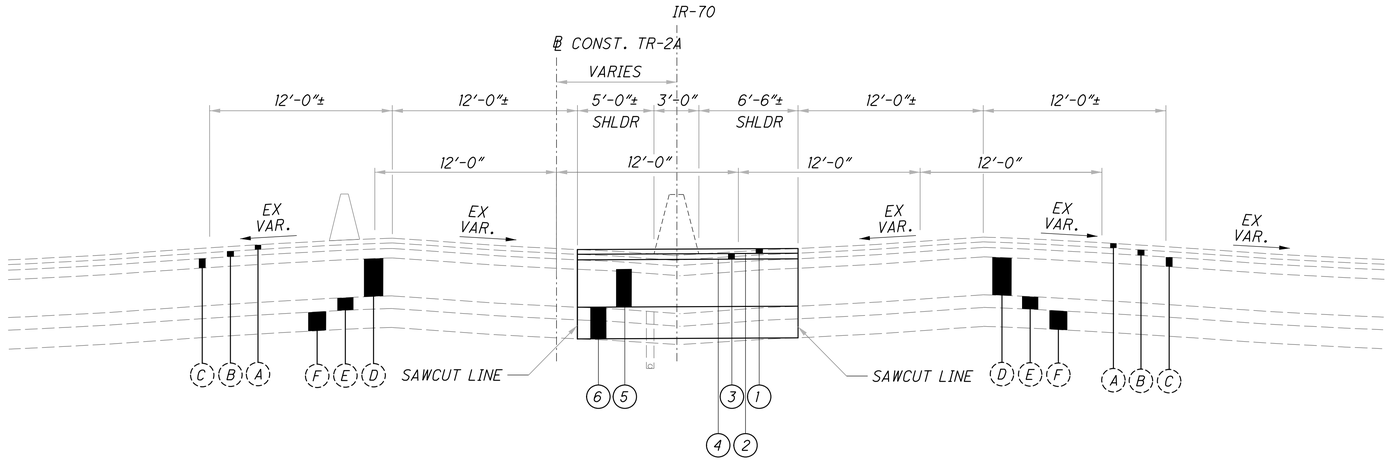

NORMAL SECTION - PAVEMENT FOR MAINTAINING TRAFFIC, CLASS A - TR-2A

SECTION APPLIES:
STA. 1229+72.02 TO STA. 1238+80.00 = 907.98 LIN. FT.

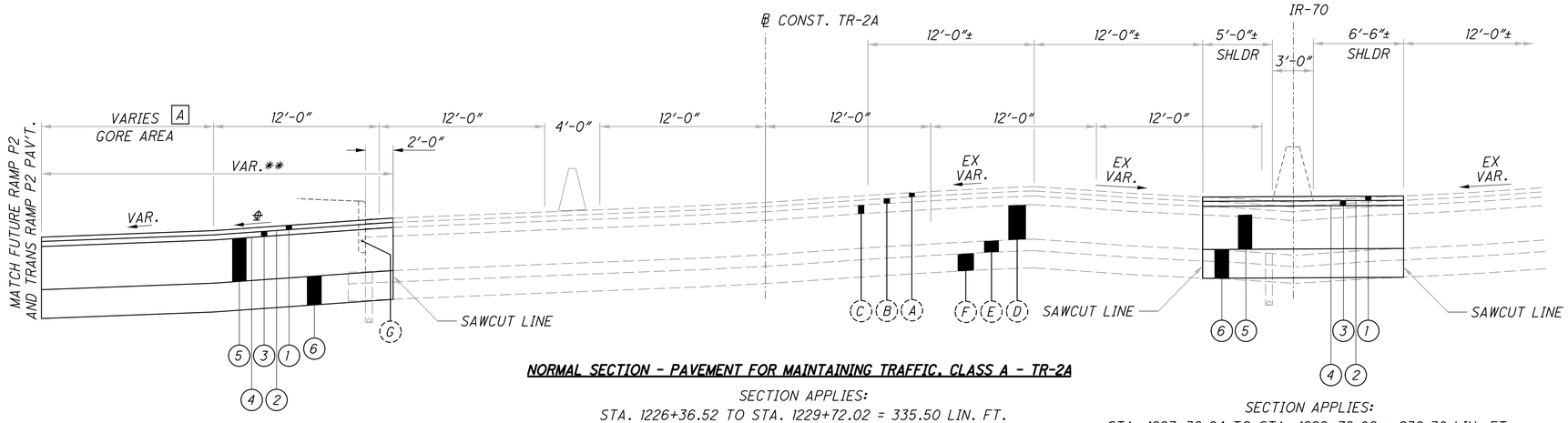

NORMAL SECTION - PAVEMENT FOR MAINTAINING TRAFFIC, CLASS A - TR-2A

SECTION APPLIES:
STA. 1226+36.52 TO STA. 1229+72.02 = 335.50 LIN. FT.
**PAVEMENT WIDENING VARIES FROM 32'-0" TO 2'-0".

SECTION APPLIES:
STA. 1227+32.64 TO STA. 1229+72.02 = 239.38 LIN. FT.

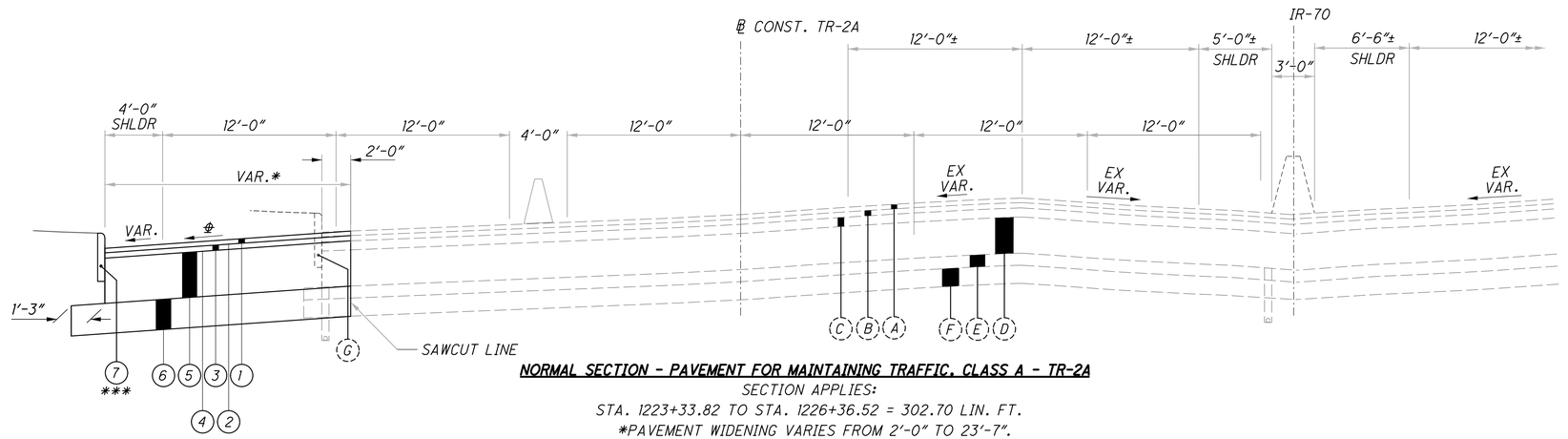

NORMAL SECTION - PAVEMENT FOR MAINTAINING TRAFFIC, CLASS A - TR-2A

SECTION APPLIES:
STA. 1223+33.82 TO STA. 1226+36.52 = 302.70 LIN. FT.
*PAVEMENT WIDENING VARIES FROM 2'-0" TO 23'-7".

LEGEND FOR EXISTING PAVEMENT

- (A) 1.5" ASPHALT CONCRETE SURFACE COURSE, TYPE 1H
- (B) 1.75" ASPHALT CONCRETE INTERMEDIATE COURSE, TYPE 2, PG64-28
- (C) 3" BITUMINOUS AGGREGATE BASE, PG64-22
- (D) 12" BITUMINOUS AGGREGATE BASE, PG64-22
- (E) 4" ASPHALT TREATED FREE DRAINING BASE
- (F) 6" AGGREGATE BASE
- (G) CURB, TYPE 6

LEGEND FOR: ITEM 615 - PAVEMENT FOR MAINTAINING TRAFFIC, CLASS A, AS PER PLAN

- (1) ITEM 441 - 1.5" ASPHALT CONCRETE SURFACE, TYPE 1, PG64-22
- (2) ITEM 407 - TACK COAT FOR INTERMEDIATE COURSE (0.04 GAL/SY)
- (3) ITEM 441 - 1.75" ASPHALT CONCRETE INTERMEDIATE COURSE, TYPE 2, PG64-22
- (4) ITEM 407 - TACK COAT (0.075 GAL/SY)
- (5) ITEM 302 - 5.5" ASPHALT CONCRETE BASE, PG64-22
- (6) ITEM 304 - 6" AGGREGATE BASE
- (7) ITEM 609 - CURB, TYPE 4-C

[A] STA. 1226+36.52 TO STA. 1228+12.89 = 12.48' TO 0.00'

***TRANSITION PROPOSED TYPE 4-C CURB HEIGHT TO MEET EXISTING TYPE 6 CURB HEIGHT IN 10 LINEAR FEET.

℄ MATCH EXISTING CROSS SLOPE

± UNLESS OTHERWISE SHOWN IN CROSS SECTIONS

CALCULATED JAH
CHECKED JML

MOT - TYPICAL SECTIONS - TR-2A (TEMP I-70 EB/WB CONNECTION) STA. 1223+33.82 TO STA. 1238+80.00

FRA-70-14.54

ms consultants, inc.

PLOT.CEL

ms consultants, inc.
msconsultants.com

Ohio DOT Workspace
70\71 East Interchange 2E
www.msconsultants.com

1" 0.5" 0

Batchplot Spec: \\msconsultants.com\files\production\03\60\06634.2E\standards\plotdrv\batchplt.spc
Pen Table: \\msconsultants.com\files\Standards\usth\ohdot\V8i\ms\plotting\pen\V8i_ms_std.tbl
Plot Driver: \\msconsultants.com\files\Standards\usth\ohdot\v8i\ms\plotting\PDF.pltcfg

Model: Sheet View: FENCE_VIEW1
Printed: 9/28/2018 @ 10:17:27 AM By: kryan
File: N:\03\60\06634.2E\mot sheets\V7370MP602A02.dgn

34" x 22"

LEGEND

TEMP. PAVEMENT PLACED DURING THIS PHASE

TEMP. PAVEMENT PLACED PRIOR TO THIS PHASE

MATCH LINE STA. 1212+50.00

MATCHLINE STA. 1223+50.00

℄ CONST. TR-2A

℄ CONST. TR-2C

RAMP P2

S 62° 00′ 48″ E

S 69° 33′ 05″ E

S 76° 55′ 09″ E

S 80° 29′ 38″ E

PC Sta. 1218+91.33

PT Sta. 1214+42.59

PT Sta. 1222+16.23

P.I. Sta. 1219+55.57
Δ = 10° 56′ 32″ (LT)
Dc = 2° 05′ 33″
R = 2,738.00′
T = 262.25′
L = 522.90′
E = 12.53′
C = 522.11′
C.B. = S 75° 01′ 22″ E
e (max) = *

P.I Sta. 1222+99.53

DND

DND

FULTON ST.

EX. I-70 EB

* BASELINE ESTABLISHED FOR CONSTUCTION ONLY. CROSS SLOPES SHALL MATCH ADJACENT PAVEMENT CROSS SLOPES, UNLESS SPECIFIED DIFFERENTLY IN THE CROSS SECTIONS.

EXISTING TR-2A PROFILE

GRAPHICAL GRADE

MATCH LINE STA. 1212+50.00

MATCH LINE STA. 1223+50.00

780 770 760

790.15 789.39 788.57 787.74 786.91 786.16 785.64 785.02 784.51 783.79 783.00 782.27 781.47 780.66 779.82 778.98 778.02 777.01 775.90 774.73 773.62 772.56

1213+00 1214+00 1215+00 1216+00 1217+00 1218+00 1219+00 1220+00 1221+00 1222+00 1223+00

N

0 20 40 80 HORIZONTAL SCALE IN FEET

CALCULATED JAH CHECKED JML

TEMP MP I-70 EB/WB CONNECTION

MOT - PLAN AND PROFILE TR-2A

STA. 1201+23.94 TO STA. 1212+50.00

FRA-70-14.54

279
2317

ms consultants, inc.

PLOT.CEL

ms consultants, inc.
msconsultants.com

www.msconsultants.com
Ohio DOT Workspace
70\71 East Interchange 2E
DCF: ohdot\V8i
DCF: 60-06634_2E_Columbus

Batchplot Spec: \\msconsultants.com\files\production\03\60\06634_2E\standards\plotdir\batchplt.spc
Pen Table: \\msconsultants.com\files\Standards\ustn\ohdot\V8\ms\plotting\pen\V8i_ms_std.tbl
Plot Driver: \\msconsultants.com\files\Standards\ustn\ohdot\V8\ms\plotting\PDF.pltcfg

Model: Sheet
Printed: 9/28/2018 @ 10:17:42 AM
File: N:\03\60\06634_2E\mot\sheets\77370MP602A03.dgn
View: FENCE_VIEW1
By: kryan

34" x 22"

LEGEND

TEMP. PAVEMENT PLACED DURING THIS PHASE

TEMP. PAVEMENT PLACED PRIOR TO THIS PHASE

MATCH LINE STA. 1223+50

MATCH LINE STA. 1234+50

CONSTRUCT PERMANENT MH-3 AND STORM SEWER OUTLET PIPE IN MOT PHASE 1. (SEE STORM SEWER PROFILES)

TIE TEMP. DITCH INTO PERM. RAMP P2 DITCH

RAMP P2

TRANS. RAMP P2

DND EXIST. 36" STORM SEWER PIPE

SAWCUT 2' INSIDE EOS

SAWCUT 4' INSIDE EOP

SAWCUT 0.5' INSIDE EOP

EX. I-70 WB

EX. I-70 EB

@ CONSTR. TR-2A

PC Sta. 1228+70.97

PT Sta. 1232+25.59

PC Sta. 1232+54.80

TBR

DND

18TH STREET

MOOBERRY ST.

P.I. Sta. 1413+59.90
Δ = 8° 31′ 28″ (LT)
Dc = 3° 30′ 39″
R = 1,632.00′
T = 121.63′
L = 242.81′
E = 4.53′
C = 242.58′
C.B. = S 78° 13′ 15″ E
e (max) = ✱

P.I. Sta. 1230+48.35
Δ = 7° 00′ 44″ (RT)
Dc = 1° 58′ 33″
R = 2,900.00′
T = 177.68′
L = 354.92′
E = 5.44′
C = 354.70′
C.B. = S 77° 27′ 54″ E
e (max) = ✱
N = 712,152.35
E = 1,835,530.99

P.I. Sta. 1234+04.34
Δ = 8° 33′ 08″ (LT)
Dc = 2° 51′ 53″
R = 2,000.00′
T = 149.54′
L = 298.53′
E = 5.58′
C = 298.25′
C.B. = S 78° 14′ 06″ E
e (max) = ✱
N = 712,053.86
E = 1,835,873.55

✱ BASELINE ESTABLISHED FOR CONSTUCTION ONLY. CROSS SLOPES SHALL MATCH ADJACENT PAVEMENT CROSS SLOPES, UNLESS SPECIFIED DIFFERENTLY IN THE CROSS SECTIONS.

GRAPHIC GRADE

EXISTING TR-2A PROFILE

PROPOSED TR-2A PROFILE

MATCH LINE 1223+50.00

MATCH LINE 1234+50.00

772.56

770.47 770.68 770.87

771.41 770.36 769.28 768.62 768.15 768.00 768.06 768.18 768.51 768.99 769.19 769.43 769.67 769.97 770.16 770.29 770.35 770.47 770.51 770.77 771.14 771.33

780 770 760

1224+00 1225+00 1226+00 1227+00 1228+00 1229+00 1230+00 1231+00 1232+00 1233+00 1234+00

HORIZONTAL SCALE IN FEET
0 20 40 80

CALCULATED JAH
CHECKED JML

TEMP I-70 EB/WB CONNECTION

MOT - PLAN AND PROFILE TR-2A

STA. 1212+50.00 TO STA. 1223+50.00

FRA-70-14.54

280
2317

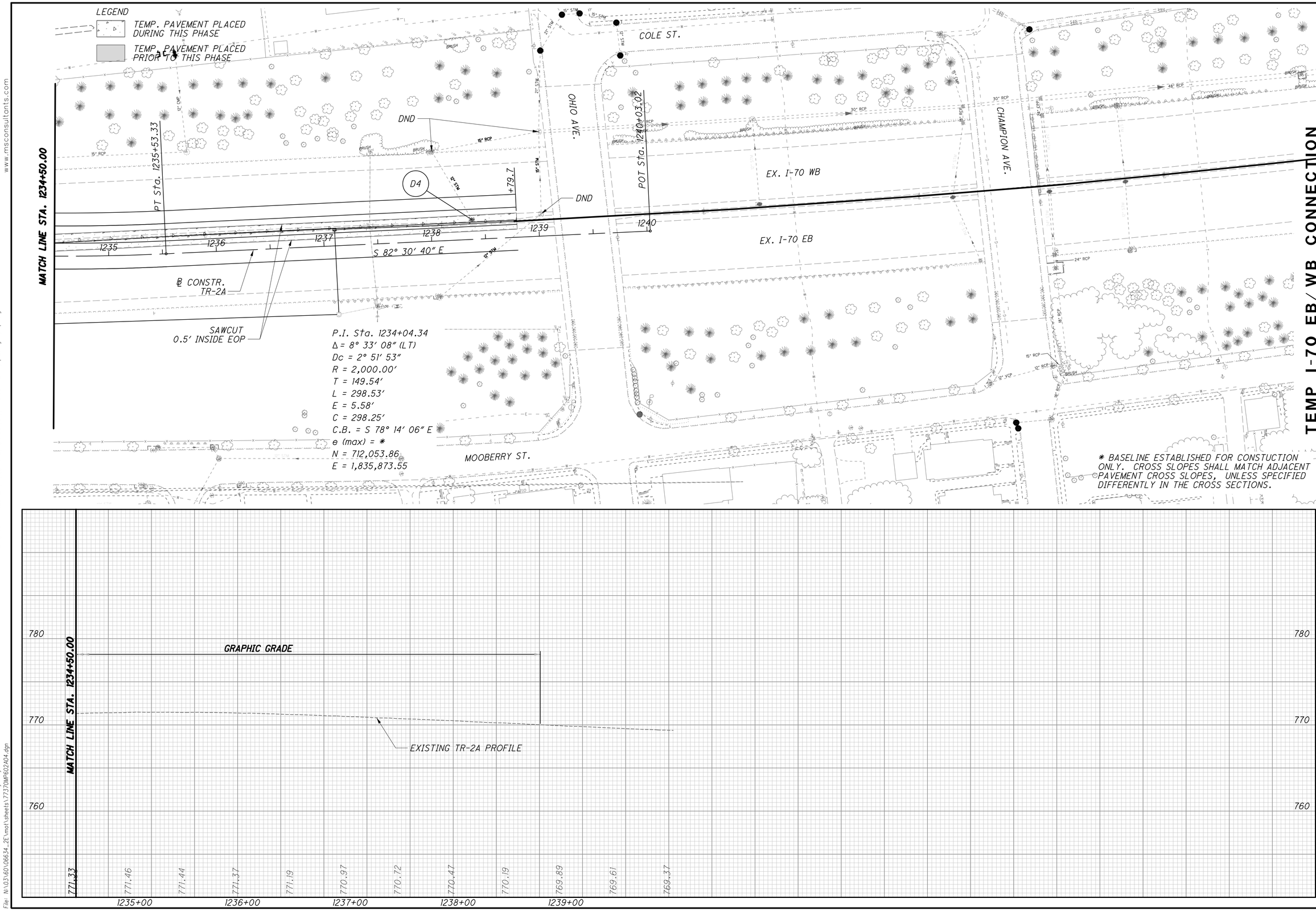

TEMP I-70 EB/WB CONNECTION

MOT - PLAN AND PROFILE TR-2A
STA. 1223+50.00 TO STA. 1234+50.00

HORIZONTAL SCALE IN FEET 0 20 40 80

CALCULATED JAH
CHECKED JML

FRA-70-14.54

281
2317

ms consultants, inc.

PLOT.CEL

ms consultants, inc.
msconsultants.com

Ohio DOT Workspace
70\71 East Interchange 2E
www.msconsultants.com

Batchplot Spec: \\msconsultants.com\files\production\03\60\06634_2E\standards\plotdrv\batchplt.spc
Pen Table: \\msconsultants.com\files\Standards\ustn\ohdot\V8i\ms\plotting\pen\V8i_ms_std.pdf
Plot Driver: \\msconsultants.com\files\Standards\ustn\ohdot\v8i\ms\plotting\PDF.pltcfg

34" x 22"

Model: Sheet
Printed: 9/28/2018 @ 10:17:48 AM
File: N:\03\60\06634_2E\mot\sheets\77370MP602A04.dgn
View: FENCE_VIEW1
By: kryan

PLOT.CEL

ms consultants, inc.
msconsultants.com

www.msconsultants.com

Ohio DOT Workspace
70\71 East Interchange 2E

PCF: ohdot\V8i
PCF: 60-06634_2E_Columbus

Batchplot Spec: \\msconsultants.com\files\production\03\60\06634_2E\standards\plotdir\batchplt.spc
Pen Table: \\msconsultants.com\files\Standards\usth\ohdot\V8i\ms\plotting\pen\V8i_ms_std.tbl
Plot Driver: \\msconsultants.com\files\Standards\usth\ohdot\v8i\ms\plotting\PDF.pltcfg

Model: XS_SHEET_1223-00.00_TO_1223+50.00 FENCE_VIEW1
Plotted: 9/28/2018 @ 10:17:52 AM By: kryan
File: N:\03\60\06634_2E\mot\sheets\773705602A01.dgn

34" x 22"

SEEDING	
END WIDTH	SQ. YDS.
4	
	17
2	
	2
	19

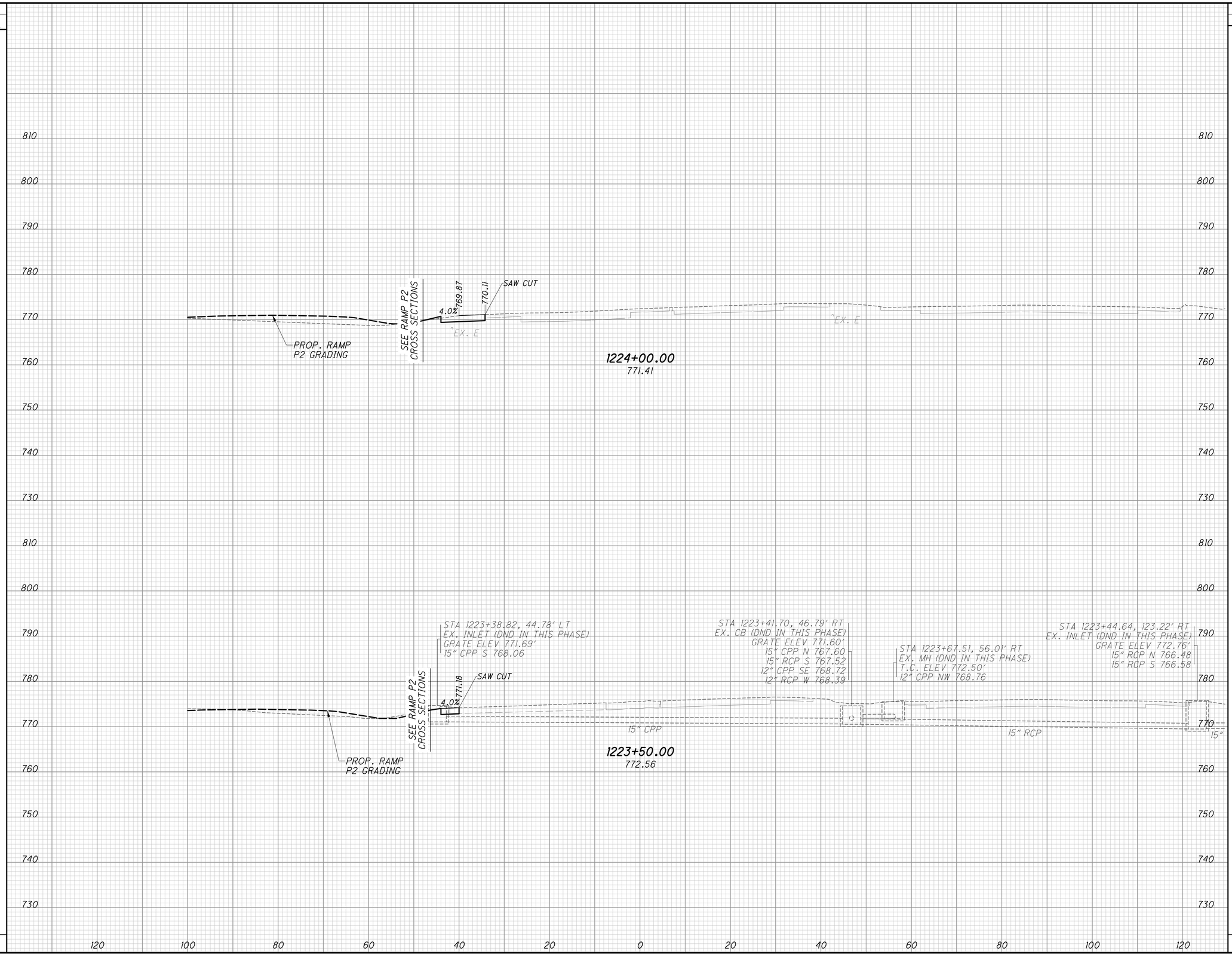

END AREA	
CUT	FILL
12	1
7	0

VOLUME	
CUT	FILL
18	1
2	0
20	1

CALCULATED JAH
CHECKED JML

MOT - CROSS SECTIONS TR-2A (TEMP I-70 EB/WB CONNECTION) STA. 1223+00.00 TO STA. 1223+50.00

FRA-70-14.54

ms consultants, inc.

PLOT.CEL

ms consultants, inc.
msconsultants.com

www.msconsultants.com

Ohio DOT Workspace
70\71 East Interchange 2E

1" 0.5" 0

34" x 22"

Batchplot Spec: \\msconsultants.com\files\production\Q3\60\06634_2E\standards\plotdrv\batchplt.spc
Pen Table: \\msconsultants.com\files\Standards\usth\ohdot\V8i\ms\plotting\pen\V8i_ms_std.tbl PCF: ohdotV8i
Plot Driver: \\msconsultants.com\files\Standards\usth\ohdot\v8i\ms\plotting\PDF.pltcfg PCF: 60-06634_2E_Columbus

Model: XS_SHEET_1224+00.00_TO_1224+50.00 FENCE_VIEW1
Printed: 9/28/2018 @ 10:17:53 AM By: kryan
File: N:\03\60\06634_2E\mot\sheets\v7730XS602A02.dgn

SEEDING	
END WIDTH	SQ. YDS.
6	36
7	31
	67

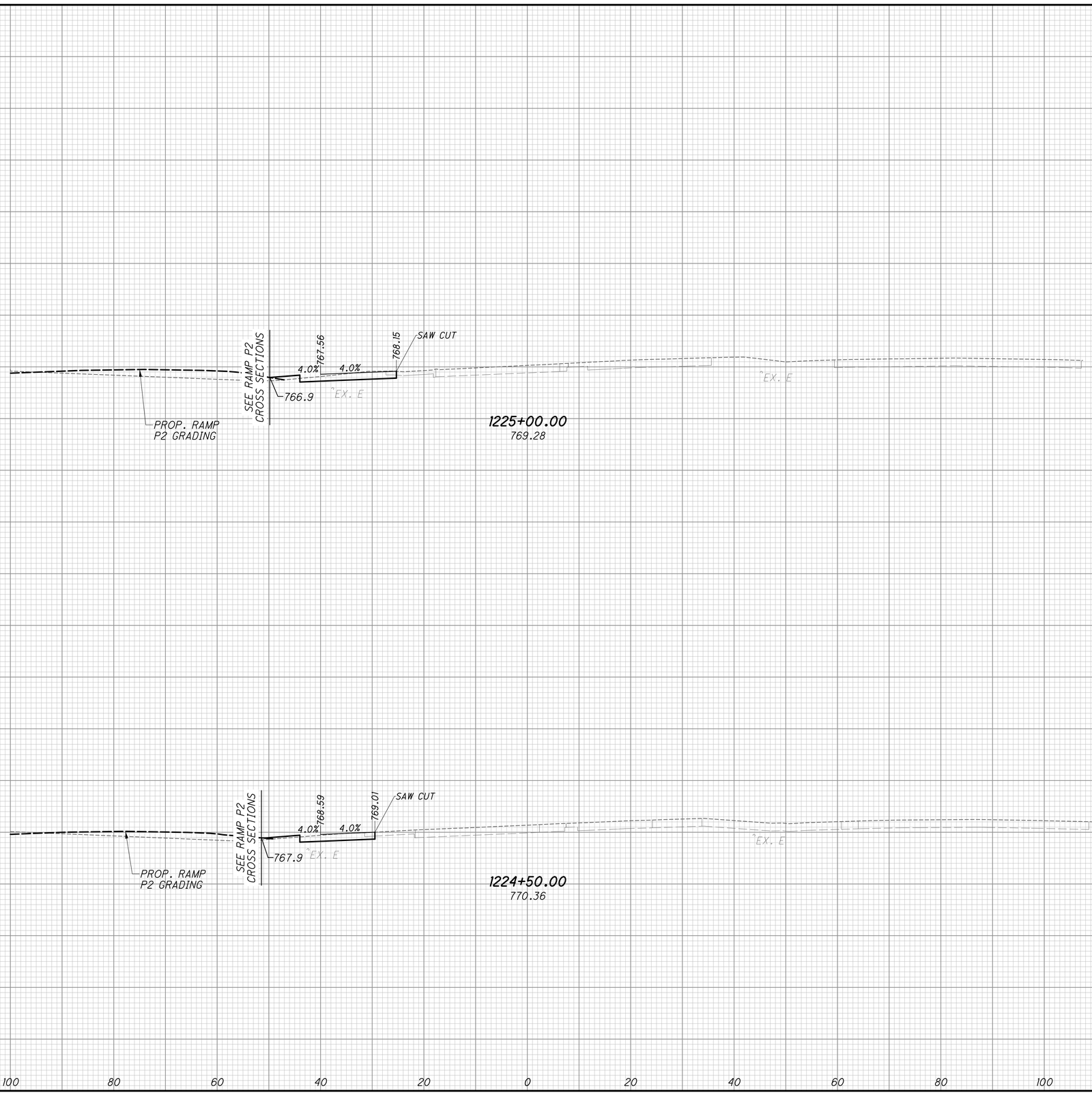

END AREA		VOLUME	
CUT	FILL	CUT	FILL
22	3		
18	2		
		37	5
		28	3
		65	8

CALCULATED JAH
CHECKED JML

MOT - CROSS SECTIONS TR-2A (TEMP I-70 EB/WB CONNECTION) STA. 1224+00.00 TO STA. 1224+50.00

FRA-70-14.54

283
2317

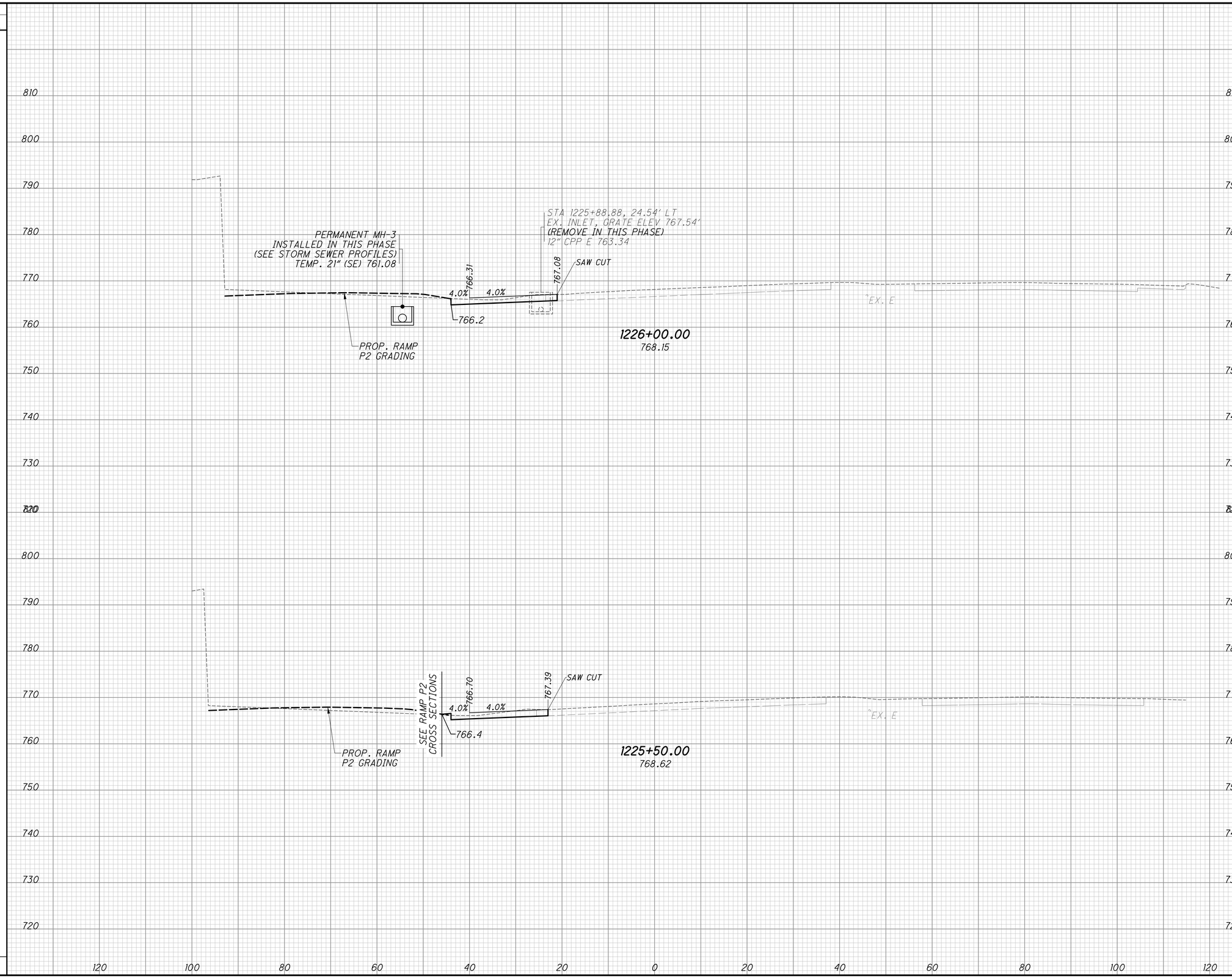

SEEDING END WIDTH	SEEDING SQ. YDS.	END AREA CUT	END AREA FILL	VOLUME CUT	VOLUME FILL
0		25	0		
	6			44	1
2		23	1		
	22			42	4
	28			86	5

CALCULATED JAH
CHECKED JML

MOT - CROSS SECTIONS TR-2A (TEMP I-70 EB/WB CONNECTION) STA. 1225+00.00 TO STA. 1225+50.00

FRA-70-14.54

284
2317

ms consultants, inc.

PLOT.CEL

ms consultants, inc.
msconsultants.com

Ohio DOT Workspace
70\71 East Interchange 2E
www.msconsultants.com

Batchplot Spec: \\msconsultants.com\files\production\03\60\06634_2E\standards\plotdrv\batchplt.spc
Pen Table: \\msconsultants.com\files\Standards\ustn\ohdot\V8i\ms\plotting\pen\V8i_ms_std.tbl
Plot Driver: \\msconsultants.com\files\Standards\ustn\ohdot\v8i\ms\plotting\PDF.pltcfg

34" x 22"

Model: XS_SHEET_1225+00.00_TO_1225+50.00 FENCE_VIEW1
Printed: 9/28/2018 @ 10:17:55 AM By: kryan
File: N:\03\60\06634_2E\mot\sheets\77370XS602A03.dgn

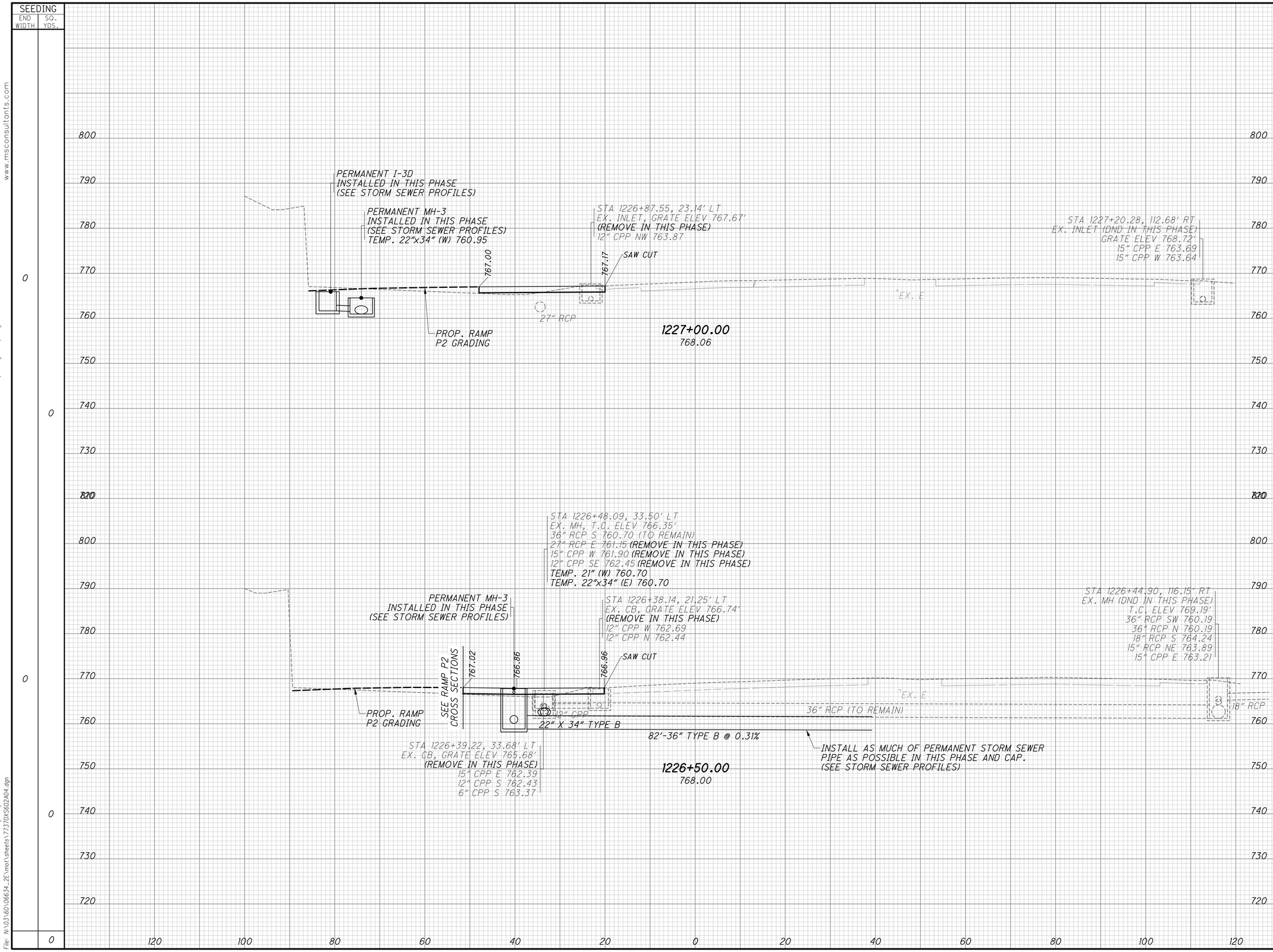

END AREA CUT	END AREA FILL	VOLUME CUT	VOLUME FILL
14	4		
		21	12
9	9		
		31	8
		52	20

CALCULATED JAH
CHECKED JML

MOT - CROSS SECTIONS TR-2A (TEMP I-70 EB/WB CONNECTION) STA. 1226+00.00 TO STA. 1226+50.00

FRA-70-14.54

ms consultants, inc.

PLOT.CEL
ms consultants, inc.
msconsultants.com
www.msconsultants.com
Ohio DOT Workspace
70\71 East Interchange 2E
PCF: 60-06634_2E_Columbus
PCF: ohdotV8i
PCF: 60-06634_2E_Columbus
Batchplot Spec: \\msconsultants.com\files\production\03\60\06634_2E\standards\plotdrv\batchplt.spc
Pen Table: \\msconsultants.com\files\Standards\ustn\ohdot\V8i\ms\plotting\pen\V8i_ms_std.tbl
Plot Driver: \\msconsultants.com\files\Standards\ustn\ohdot\v8i\ms\plotting\PDF.pltcfg
34" x 22"
Model: XS_SHEET_1226+00.00_TO_1226+50.00 FENCE_VIEW1
Printed: 9/28/2018 @ 10:17:57 AM By: kryan
File: N:\03\60\06634_2E\mot\sheets\77370XS602A04.dgn

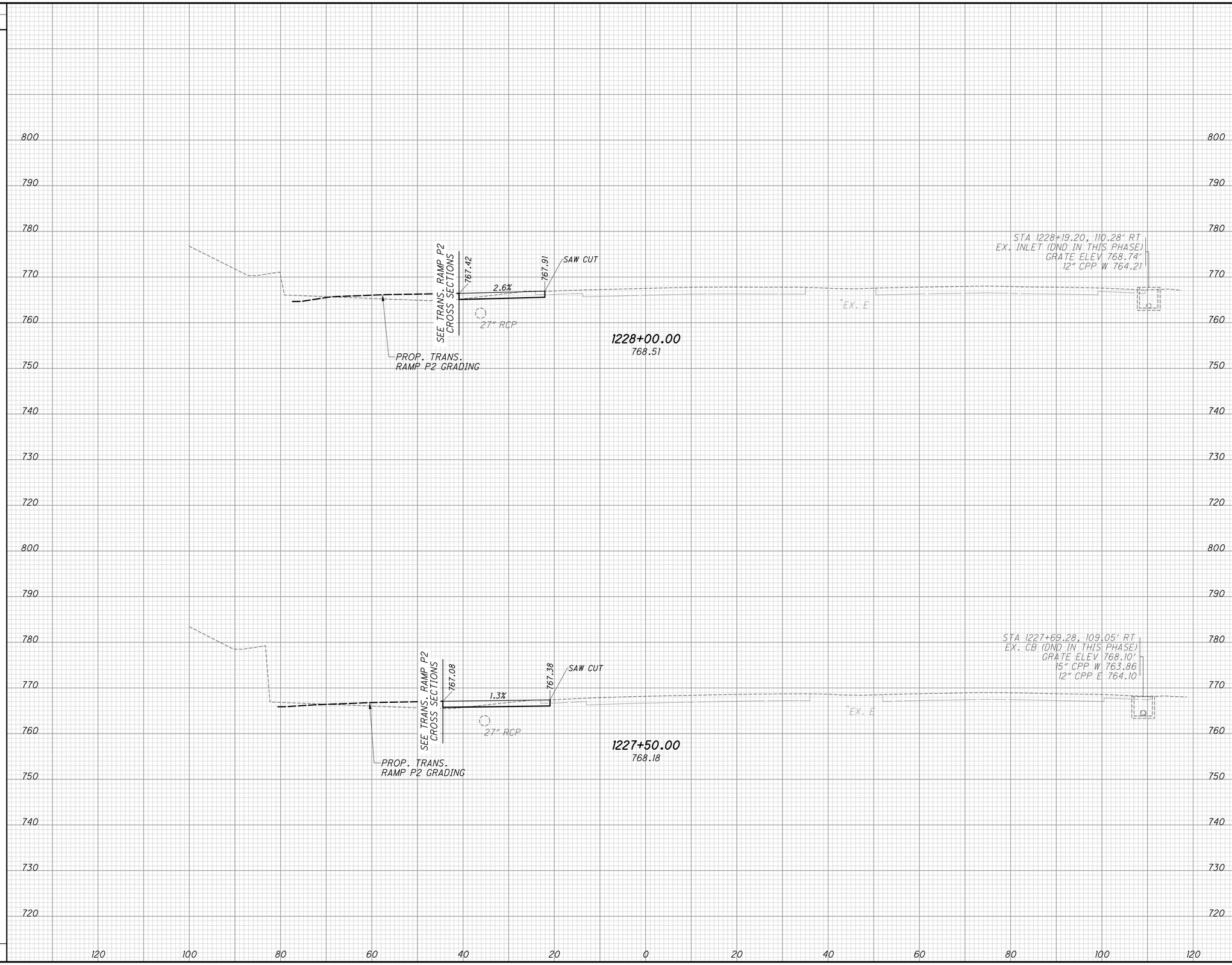

SEEDING END WIDTH	SEEDING SQ. YDS.	END AREA CUT	END AREA FILL	VOLUME CUT	VOLUME FILL
0		16	0		
	0			29	1
0		15	1		
	0			27	5
	0			56	6

CALCULATED JAH
CHECKED JML

MOT - CROSS SECTIONS TR-2A (TEMP I-70 EB/WB CONNECTION) STA. 1227+00.00 TO STA. 1227+50.00

FRA-70-14.54

ms consultants, inc.

PLOT.CEL
ms consultants, inc.
msconsultants.com
Ohio DOT Workspace
70\71 East Interchange 2E
www.msconsultants.com
Batchplot Spec: \\msconsultants.com\files\production\03\60\06634_2E\standards\plotdrv\batchplt.spc
Pen Table: \\msconsultants.com\files\Standards\ustn\ohdot\V8i\ms\plotting\pen\V8i_ms_std.tbl
Plot Driver: \\msconsultants.com\files\Standards\ustn\ohdot\v8i\ms\plotting\PDF.pltcfg
34" x 22"
Model: XS_SHEET_1227+00.00_TO_1227+50.00 FENCE_VIEW1
Printed: 9/28/2018 @ 10:17:58 AM By: kryan
File: N:\03\60\06634_2E\mot\sheets\77370XS602A05.dgn

PLOT.CEL

ms consultants, inc.
msconsultants.com

SEEDING	
END WIDTH	SQ. YDS.
0	0
0	0
0	0

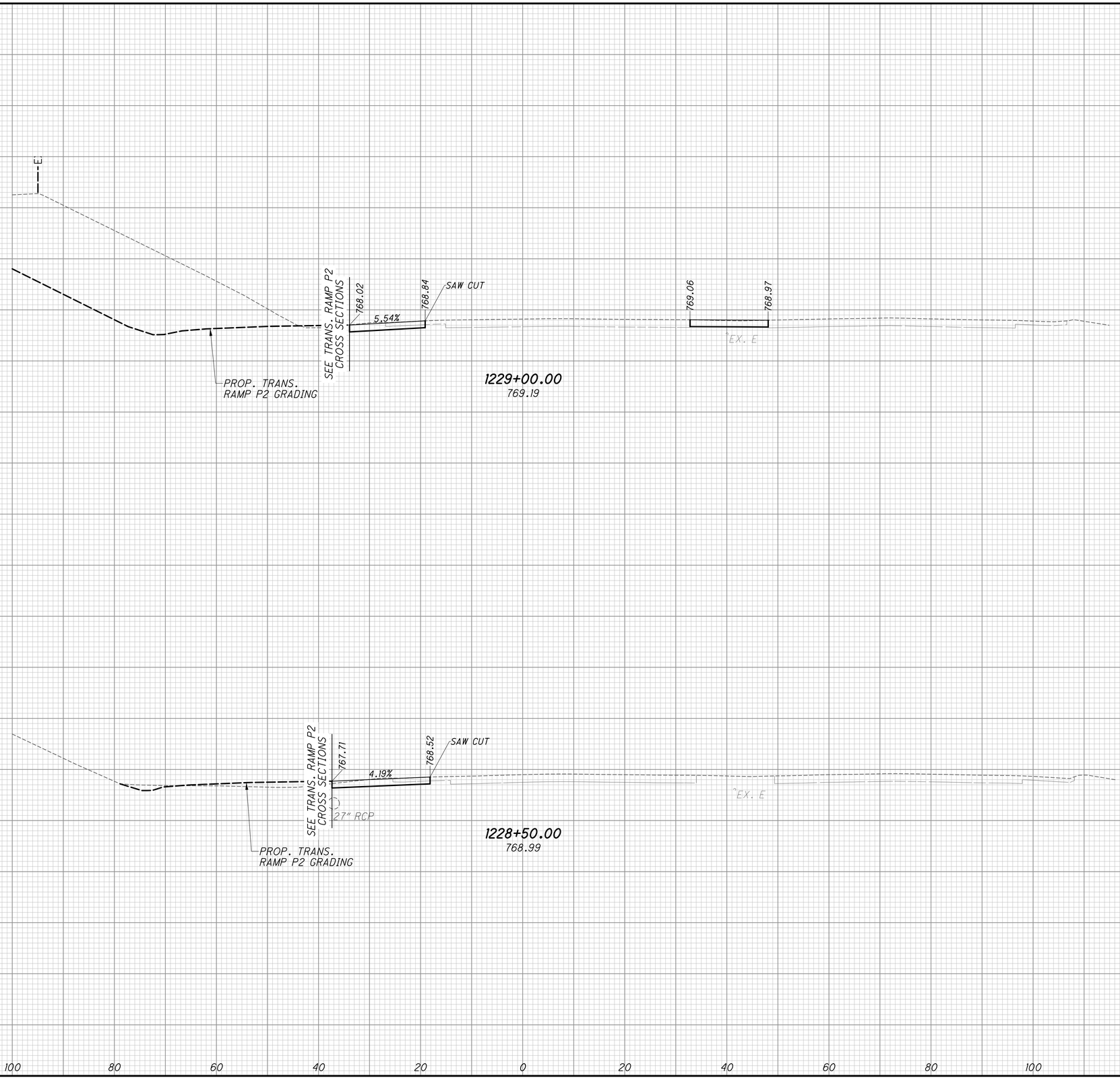

END AREA		VOLUME	
CUT	FILL	CUT	FILL
40	0		
25	0		
		78	0
		38	0
		116	0

CALCULATED JAH
CHECKED JML

MOT - CROSS SECTIONS TR-2A (TEMP I-70 EB/WB CONNECTION)

STA. 1228+00.00 TO STA. 1228+50.00

FRA-70-14.54

287
2317

ms consultants, inc.

Batchplot Spec: \\msconsultants.com\files\production\03\60\06634_2E\standards\plotdir\batchplt.spc
Pen Table: \\msconsultants.com\files\Standards\usth\ohdot\V8i\ms\plotting\pen\V8i_ms_std.tbl
Plot Driver: \\msconsultants.com\files\Standards\usth\ohdot\v8i\ms\plotting\PDF.pltcfg

Ohio DOT Workspace
70\71 East Interchange 2E
www.msconsultants.com

DGN: ohdot\V8i
DCF: 60-06634_2E_Columbus

1"
0.5"
0

34" x 22"

Model: XS_SHEET_1228+00.00_TO_1228+50.00 FENCE_VIEW1
Printed: 9/28/2018 @ 10:18:00 AM By: kryan
File: N:\03\60\06634_2E\mot\sheets\v7730XS602A06.dgn

34" x 22"

Model: XS_SHEET_1229+00.00_TO_1229+50.00 FENCE_VIEW1
Printed: 9/28/2018 @ 10:18:02 AM By: kryan
File: N:\03\60\06634_2E\mot\sheets\77370XS602A07.dgn

Batchplot Spec: \\msconsultants.com\files\production\03\60\06634_2E\standards\plotdrv\batchplt.spf
Pen Table: \\msconsultants.com\files\Standards\ustn\ohdot\V8i\ms\plotting\pen\V8i_ms_std.tbl
Plot Driver: \\msconsultants.com\files\Standards\ustn\ohdot\v8i\ms\plotting\PDF.pltcfg

0 1" 0.5"

DGN: ohdotV8i
PCF: 60-06634_2E_Columbus

Ohio DOT Workspace
70\71 East Interchange 2E

ms consultants, inc.
msconsultants.com

PLOT.CEL

www.msconsultants.com

SEEDING

END WIDTH	SQ. YDS.
0	0

730 740 750 760 770 780 790 800 810 820 740 750 760 770 780 790 800 810

120 100 80 60 40 20 0 20 40 60 80 100 120

E.

PROP. TRANS. RAMP P2 GRADING

SEE TRANS. RAMP P2 CROSS SECTIONS

768.44

6.35%

769.11

SAW CUT

1229+50.00

769.43

769.25

EX. E

769.10

PROP. TRANS. RAMP P2 GRADING

SEE TRANS. RAMP P2 CROSS SECTIONS

1230+00.00

769.67

769.43

EX. E

769.32

730 740 750 760 770 780 790 800 810 820 740 750 760 770 780 790 800 810

END AREA	CUT	FILL
	37	19
	0	0

VOLUME	CUT	FILL
123	71	52
0	0	0

ms consultants, inc.

288
2317

FRA-70-14.54

MOT - CROSS SECTIONS TR-2A (TEMP I-70 EB/WB CONNECTION) STA. 1229+00.00 TO STA. 1229+50.00

CALCULATED JAH

CHECKED JML

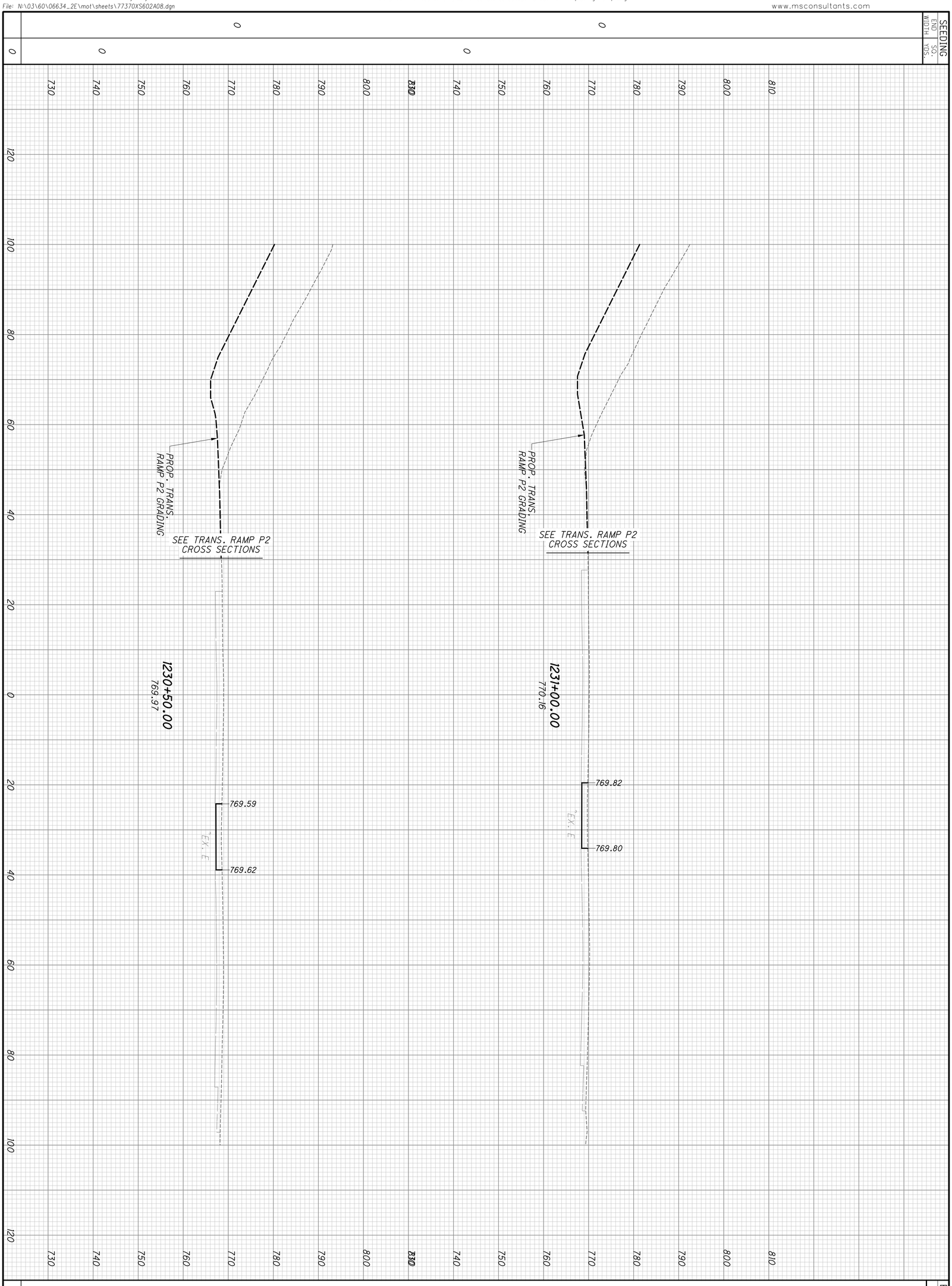

18	18		
0	0		
67	34	33	
0	0	0	

FRA-70-14.54

MOT - CROSS SECTIONS TR-2A (TEMP I-70 EB/WB CONNECTION) STA. 1230+00.00 TO STA. 1230+50.00

CALCULATED JAH
CHECKED JML

ms consultants, inc.

PLOT.CEL

ms consultants, inc.
msconsultants.com

www.msconsultants.com

Ohio DOT Workspace
70\71 East Interchange 2E

1" 0.5" 0

Batchplot Spec: \\msconsultants.com\files\production\Q3\60\06634_2E\standards\plotdr\batchplt.spc
Pen Table: \\msconsultants.com\files\Standards\usth\ohdot\V8i\ms\plotting\pen\V8i_ms_std.tbl PCF: ohdotV8i
Plot Driver: \\msconsultants.com\files\Standards\usth\ohdot\V8i\ms\plotting\PDF.pltcfg PCF: 60-06634_2E_Columbus

34" x 22"

Model: XS_SHEET_1231+00.00_TO_1231+50.00 FENCE_VIEW1
Printed: 9/28/2018 @ 10:18:05 AM By: kryan
File: N:\03\60\06634_2E\mot\sheets\v7730XS602A00.dgn

SEEDING	
END WIDTH	SQ. YDS.
0	0
0	0
0	0

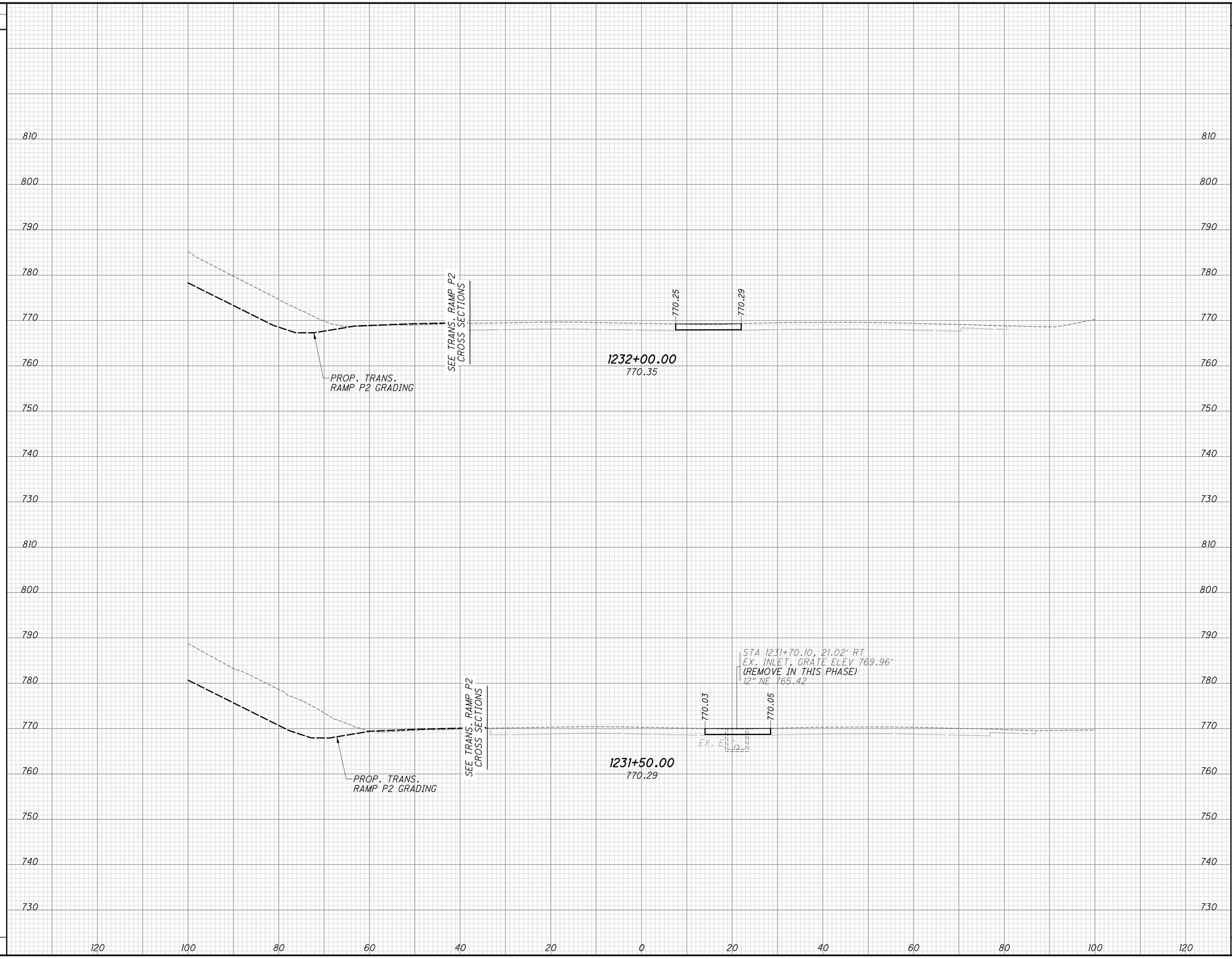

END AREA		VOLUME	
CUT	FILL	CUT	FILL
18	0		
18	0		
		33	0
		33	0
		66	0

CALCULATED JAH
CHECKED JML

MOT - CROSS SECTIONS TR-2A (TEMP I-70 EB/WB CONNECTION) STA. 1231+00.00 TO STA. 1231+50.00

FRA-70-14.54

290
2317

34" x 22"

Model: XS_SHEET_1232+00.00_TO_1232+50.00 FENCE_VIEW1
Printed: 9/28/2018 @ 10:18:07 AM By: kryan
File: N:\03\60\06634_2E\mot\sheets\77370XS602A10.dgn

Batchplot Spec: \\msconsultants.com\files\production\03\60\06634_2E\standards\plotdrv\batchplt.spf
Pen Table: \\msconsultants.com\files\Standards\ustn\ohdot\V8i\ms\plotting\pen\V8i_ms_std.tbl
Plot Driver: \\msconsultants.com\files\Standards\ustn\ohdot\v8i\ms\plotting\PDF.pltcfg

PCF: ohdotV8i
PCF: 60-06634_2E_Columbus

Ohio DOT Workspace
70\71 East Interchange 2E

ms consultants, inc.
msconsultants.com

PLOT.CEL

www.msconsultants.com

SEEDING
END WIDTH | SQ. YDS.

PROP. TRANS. RAMP P2 GRADING

SEE TRANS. RAMP P2 CROSS SECTIONS

1232+50.00
770.47
770.47

770.47
770.53

EX. 12" W

PROP. TRANS. RAMP P2 GRADING

SEE TRANS. RAMP P2 CROSS SECTIONS

1233+00.00
770.68
770.51

770.66
770.70

END AREA
CUT | FILL

VOLUME
CUT | FILL

MOT - CROSS SECTIONS TR-2A (TEMP I-70 EB/WB CONNECTION) STA. 1232+00.00 TO STA. 1232+50.00

FRA-70-14.54

291
2317

CALCULATED JAH
CHECKED JML

ms consultants, inc.

PLOT.CEL

ms consultants, inc.
msconsultants.com

www.msconsultants.com

Ohio DOT Workspace
70\71 East Interchange 2E

1" 0.5" 0

Batchplot Spec: \\msconsultants.com\files\production\03\60\06634_2E\standards\plotdrv\batchplt.spc
Pen Table: \\msconsultants.com\files\Standards\usth\ohdot\V8i\ms\plotting\pen\V8i_ms_std.tbl
Plot Driver: \\msconsultants.com\files\Standards\usth\ohdot\v8i\ms\plotting\PDF.pltcfg
PDF: ohdotV8i
PCF: 60-06634_2E_Columbus

34" x 22"

Model: XS_SHEET_1233+00.00_TO_1233+50.00 FENCE_VIEW1
Printed: 9/28/2018 @ 10:18:08 AM By: kryan
File: N:\03\60\06634_2E\mot\sheets\v7730XS02Alt.dgn

SEEDING	
END WIDTH	SQ. YDS.
0	
	0
0	
	0
0	
	0

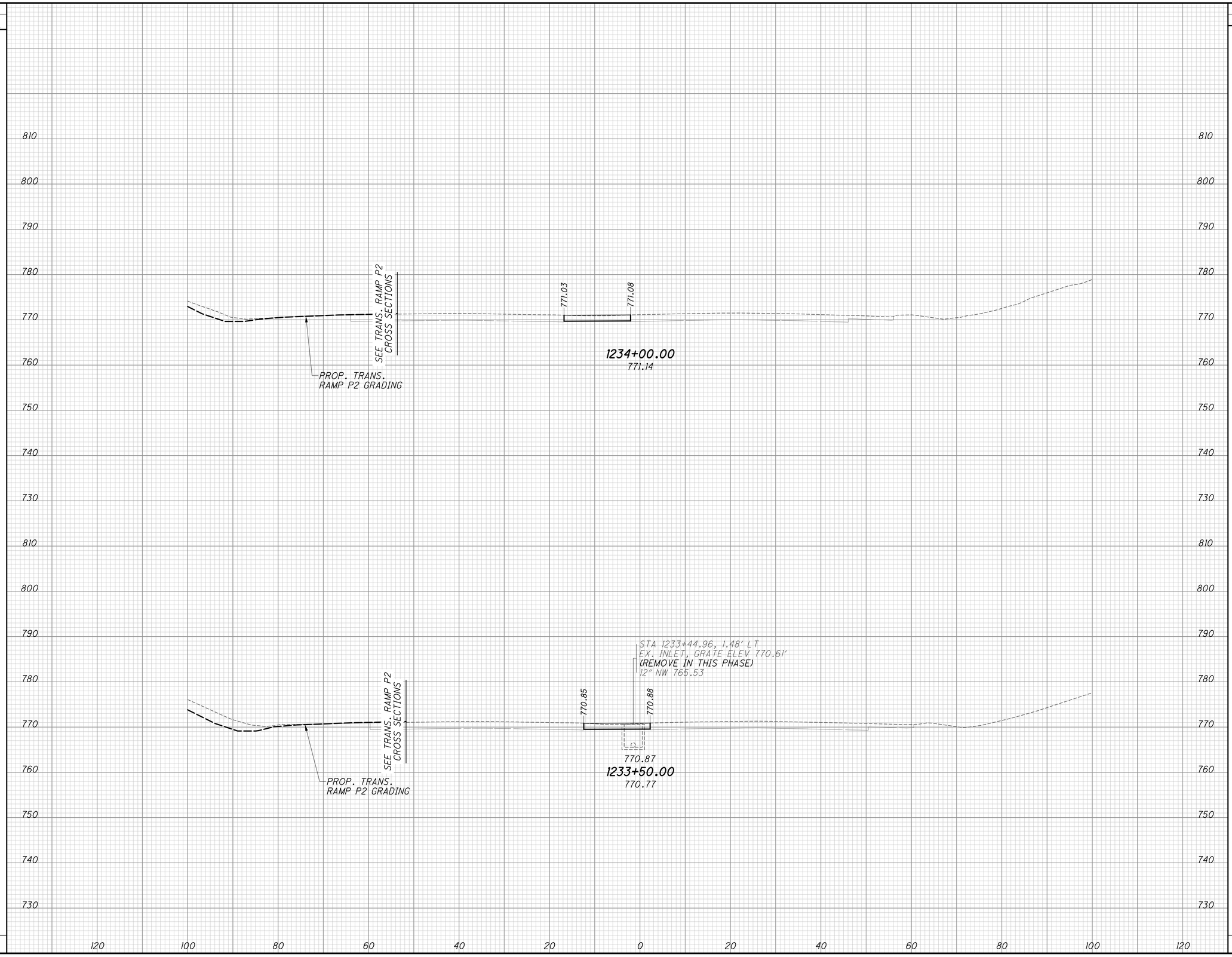

END AREA		VOLUME	
CUT	FILL	CUT	FILL
18	0		
		32	0
17	0		
		32	0
		64	0

CALCULATED JAH
CHECKED JML

MOT - CROSS SECTIONS TR-2A (TEMP I-70 EB/WB CONNECTION) STA. 1233+00.00 TO STA. 1233+50.00

FRA-70-14.54

292
2317

ms consultants, inc.

34" x 22"

Model: XS_SHEET_1234+00.00_TO_1234+50.00 FENCE_VIEW1
Printed: 9/28/2018 @ 10:18:10 AM By: kryan
File: N:\03\60\06634_2E\mot\sheets\77370XS602A12.dgn

Batchplot Spec: \\msconsultants.com\files\production\03\60\06634_2E\standards\plotdrv\batchplt.spc
Pen Table: \\msconsultants.com\files\Standards\ustn\ohdot\V8i\ms\plotting\pen\V8i_ms_std.tbl
Plot Driver: \\msconsultants.com\files\Standards\ustn\ohdot\v8i\ms\plotting\PDF.pltcfg

0 1" 0.5"

PCF: ohdotV8i
PCF: 60-06634_2E_Columbus

Ohio DOT Workspace
70\71 East Interchange 2E

ms consultants, inc.
msconsultants.com

PLOT.CEL

www.msconsultants.com

SEEDING

END WIDTH	SQ. YDS.
0	0
0	0

PROP. TRANS. RAMP P2 GRADING

SEE TRANS. RAMP P2 CROSS SECTIONS

15" RCP

1234+50.00
771.33

771.18

771.21

1235+00.00
771.46

771.25

771.30

END AREA CUT	END AREA FILL	VOLUME CUT	VOLUME FILL
19	0	69	0
19	0	34	0
		35	0

FRA-70-14.54

MOT - CROSS SECTIONS TR-2A (TEMP I-70 EB/WB CONNECTION) STA. 1234+00.00 TO STA. 1234+50.00

293
2317

CALCULATED JAH
CHECKED JML

ms consultants, inc.

PLOT.CEL

ms consultants, inc.
msconsultants.com

Ohio DOT Workspace
70\71 East Interchange 2E
www.msconsultants.com

UCF: ohdotV8i
PCF: 60-06634_2E_Columbus

Batchplot Spec: \\msconsultants.com\files\production\03\60\06634_2E\standards\plotdrv\batchplt.spc
Pen Table: \\msconsultants.com\files\Standards\ustn\ohdot\V8i\ms\plotting\pen\V8i_ms_std.tbl
Plot Driver: \\msconsultants.com\files\Standards\ustn\ohdot\v8i\ms\plotting\PDF.pltcfg

34" x 22"

Model: XS_SHEET_1235+00.00_TO_1235+50.00 FENCE_VIEW1
Printed: 9/28/2018 @ 10:18:12 AM By: kryan
File: N:\03\60\06634_2E\mot\sheets\77370XS602A13.dgn

SEEDING		END AREA		VOLUME	
END WIDTH	SQ. YDS.	CUT	FILL	CUT	FILL
0		18	0		
	0			33	0
0		18	0		
	0			34	0
	0			67	0

CALCULATED JAH
CHECKED JML

MOT - CROSS SECTIONS TR-2A (TEMP I-70 EB/WB CONNECTION) STA. 1235+00.00 TO STA. 1235+50.00

FRA-70-14.54

294
2317

ms consultants, inc.

PLOT.CEL

ms consultants, inc.
msconsultants.com

www.msconsultants.com

Ohio DOT Workspace
70\71 East Interchange 2E

1"
0.5"
0

Batchplot Spec: \\msconsultants.com\files\production\03\60\06634_2E\standards\plotdrv\batchplt.spc
Pen Table: \\msconsultants.com\files\Standards\usth\ohdot\V8i\ms\plotting\pen\V8i_ms_std.tbl
Plot Driver: \\msconsultants.com\files\Standards\usth\ohdot\v8i\ms\plotting\PDF.pltcfg

PDF: ohdotV8i
PDF: 60-06634_2E_Columbus

34" x 22"

Model: XS_SHEET_1239-00.00_TO_1239-48.00_FENCE_VIEW1
Plotted: 9/28/2018 @ 10:18:13 AM By: kryan
File: N:\03\60\06634_2E\mot\sheets\V7370X3602A14.dgn

SEEDING	
END WIDTH	SQ. YDS.
0	0
0	0

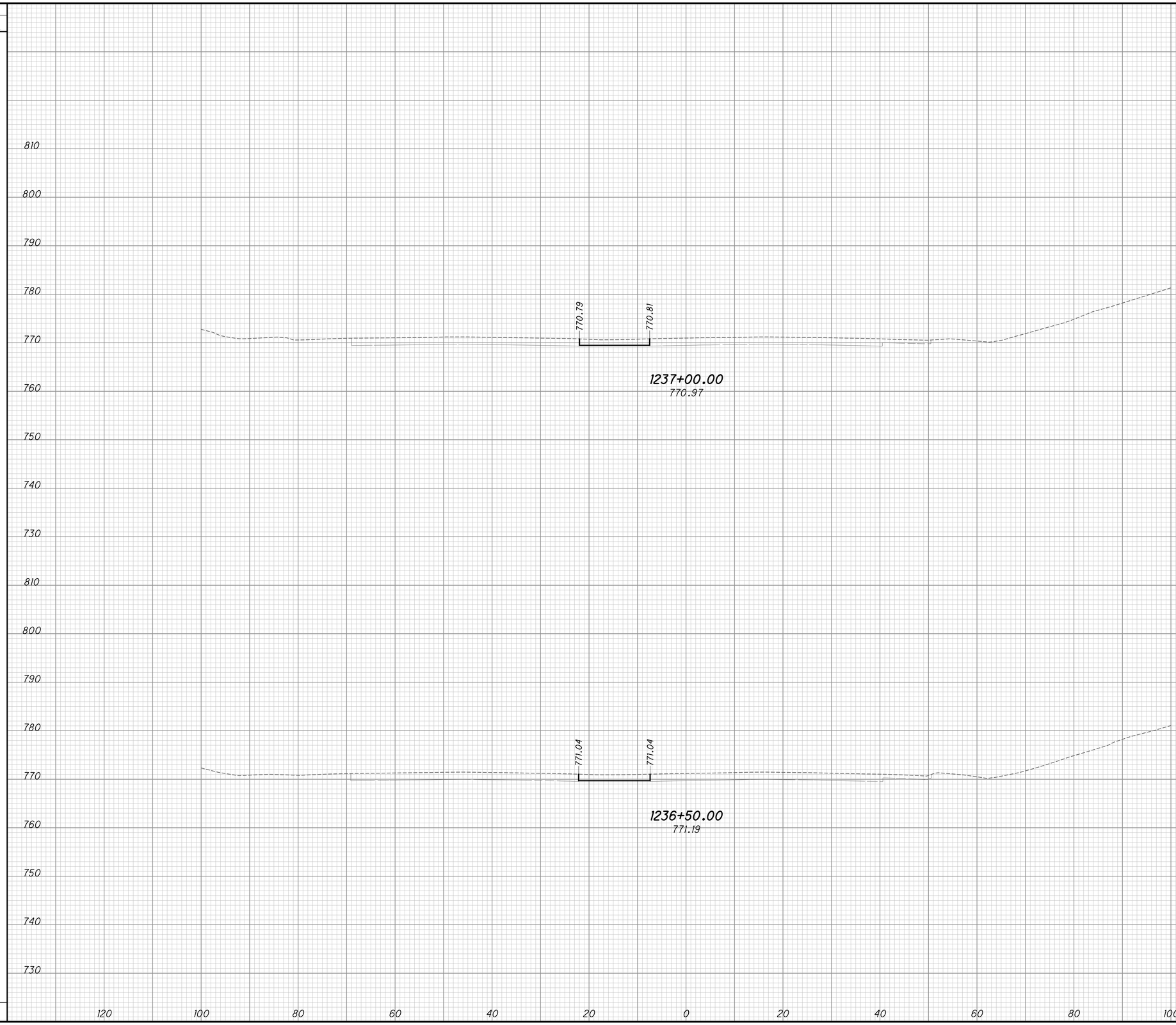

END AREA		VOLUME	
CUT	FILL	CUT	FILL
18	0		
18	0		
		33	0
		33	0
		66	0

CALCULATED JAH
CHECKED JML

MOT - CROSS SECTIONS TR-2A (TEMP I-70 EB/WB CONNECTION) STA. 1236+00.00 TO STA. 1236+50.00

FRA-70-14.54

295
2317

PLOT.CEL

ms consultants, inc.
msconsultants.com

www.msconsultants.com

Ohio DOT Workspace
70\71 East Interchange 2E

1"
0.5"
0

Batchplot Spec: \\msconsultants.com\files\production\03\60\06634_2E\standards\plotdr\batchplt.spc
Pen Table: \\msconsultants.com\files\Standards\ustn\ohdot\V8i\ms\plotting\pen\V8i_ms_std.tbl
Plot Driver: \\msconsultants.com\files\Standards\ustn\ohdot\v8i\ms\plotting\PDF.pltcfg
PCF: ohdotV8i
PCF: 60-06634_2E_Columbus

34" x 22"

Model: XS_SHEET_1239-00.00_TO_1239-48.98 FENCE_VIEW1
Printed: 9/28/2018 @ 10:18:15 AM By: kryan
File: N:\03\60\06634_2E\mot\sheets\V7370X3602A15.dgn

SEEDING	
END WIDTH	SQ. YDS.
0	0
0	0

STA 1238+03.94, 83.41' LT
EX. INLET (DND IN THIS PHASE)
GRATE ELEV 770.44'
15" RCP E 765.99
6" CPP W 766.74
15" RCP SW 765.99

EX. 15" RCP

770.24 770.30

1238+00.00
770.47

STA 1238+04.79, 52.34' RT
EX. INLET (DND IN THIS PHASE)
GRATE ELEV 771.14'
12" CPP NE 767.48
4" CPP N 767.51

EX. 12" CPP

770.50 770.56

1237+50.00
770.72

EX. E

END AREA		VOLUME	
CUT	FILL	CUT	FILL
17	0		
17	0	31	0
		32	0
		63	0

CALCULATED JAH
CHECKED JML

MOT - CROSS SECTIONS TR-2A (TEMP I-70 EB/WB CONNECTION) STA. 1236+00.00 TO STA. 1236+50.00

FRA-70-14.54

296
2317

ms consultants, inc.

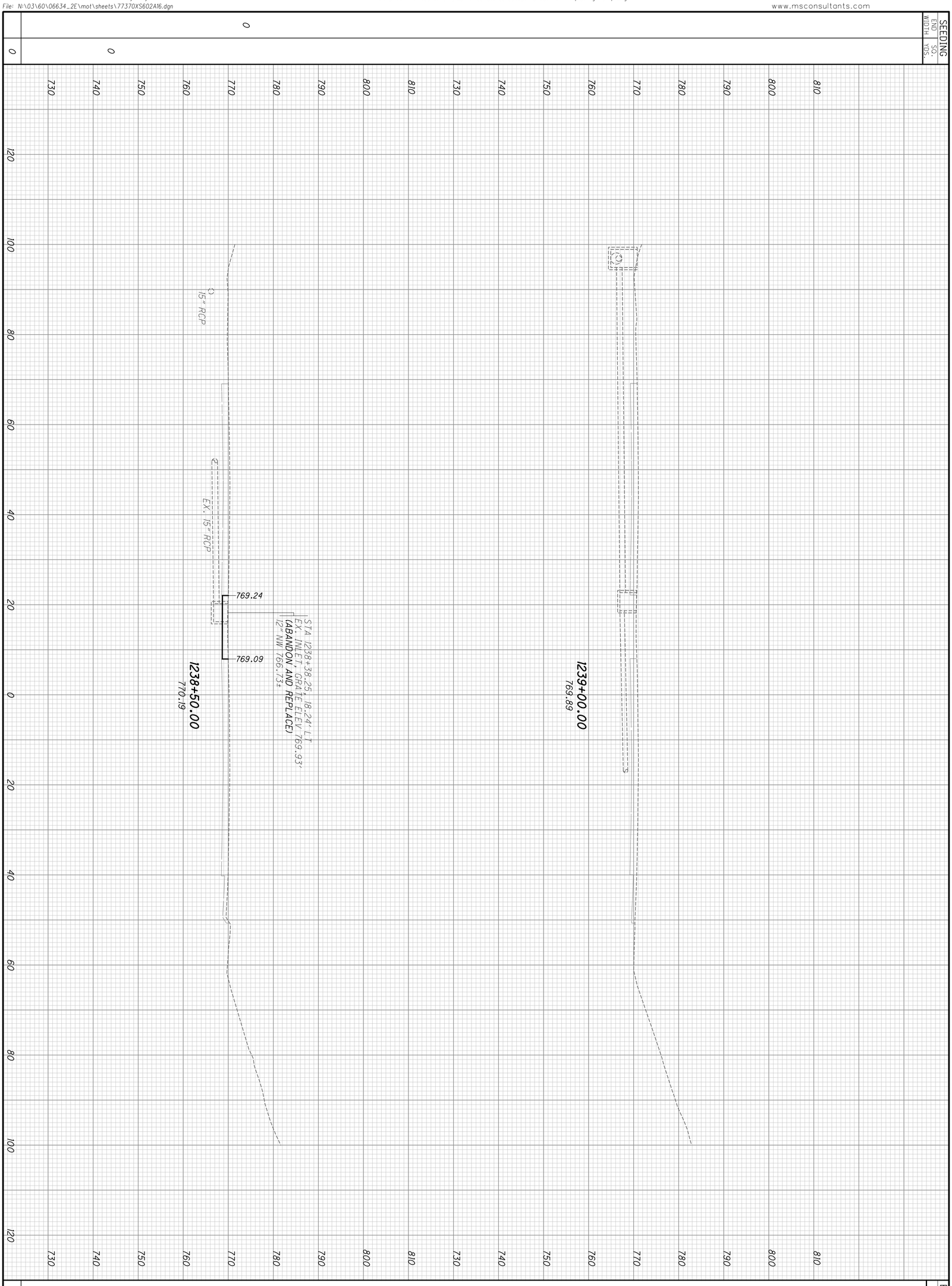

END AREA		VOLUME	
CUT	FILL	CUT	FILL
17	0		
31	31		
0	0		

297
2317

FRA-70-14.54

MOT - CROSS SECTIONS TR-2A (TEMP I-70 EB/WB CONNECTION) STA. 1237+00.00 TO STA. 1237+50.00

CALCULATED JAH
CHECKED JML

PLOT.CEL

ms consultants, inc.
msconsultants.com

www.msconsultants.com

Ohio DOT Workspace
70\71 East Interchange 2E

1"
0.5"
0

CPF: ohdot\V8i
PCF: 60-06634_2E_Columbus

Batchplot Spec: \\msconsultants.com\files\production\03\60\06634_2E\standards\plotdr\batchplt.spc
Pen Table: \\msconsultants.com\files\Standards\ustn\ohdot\V8i\ms\plotting\pen\V8i_ms_std.tbl
Plot Driver: \\msconsultants.com\files\Standards\ustn\ohdot\v8i\ms\plotting\PDF.pltcfg

Model: XS_SHEET_1239+00.00_TO_1239+50.00 FENCE_VIEW1
Printed: 9/28/2018 @ 10:18:18 AM By: kryan
File: N:\03\60\06634_2E\mot\sheets\v7370XS602A17.dgn

34" x 22"

SEEDING	
END WIDTH	SQ. YDS.
0	

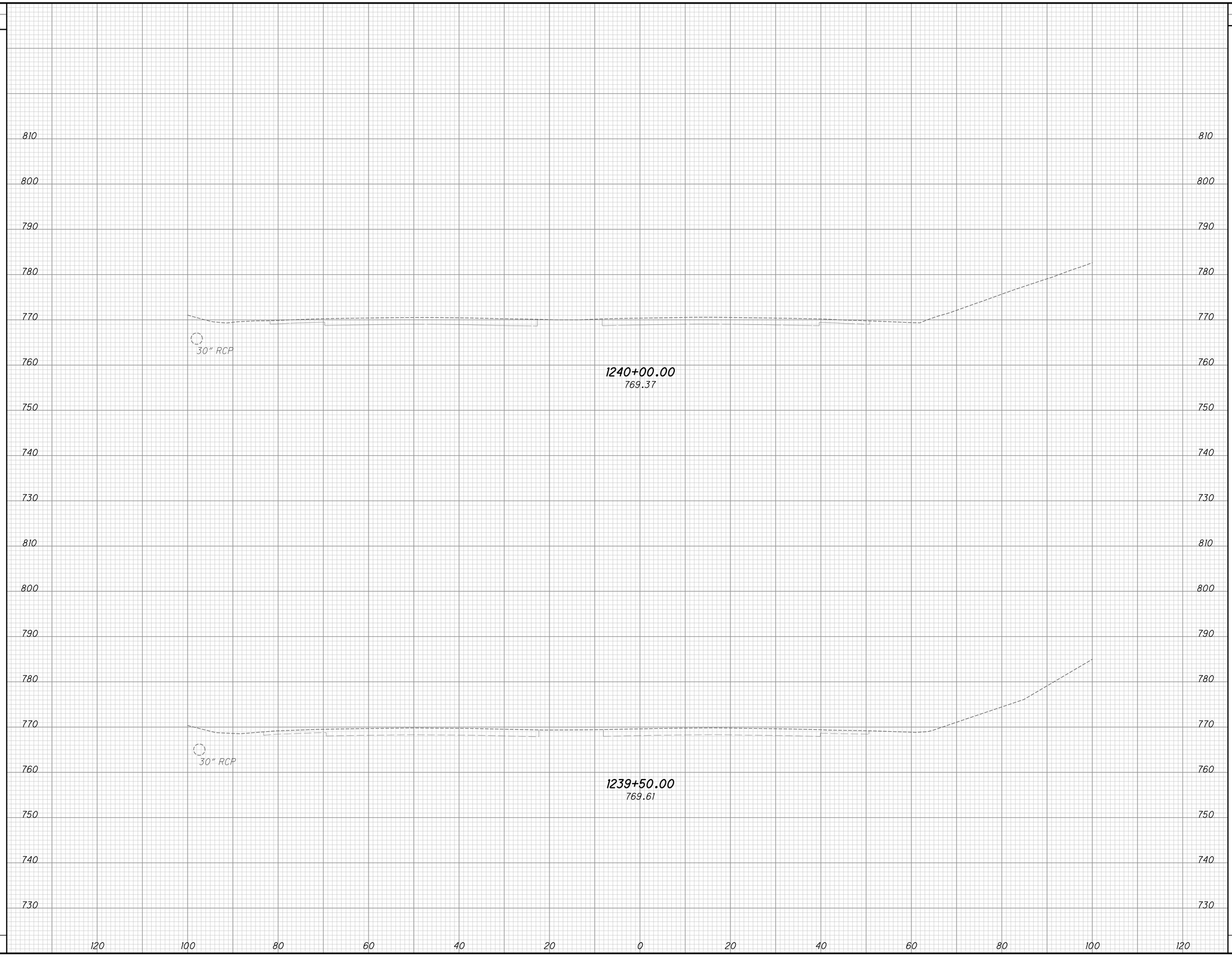

END AREA		VOLUME	
CUT	FILL	CUT	FILL
		0	0

CALCULATED JAH
CHECKED JML

MOT - CROSS SECTIONS TR-2A (TEMP I-70 EB/WB CONNECTION) STA. 1238+00.00 TO STA. 1238+50.00

FRA-70-14.54

298
2317

ms consultants, inc.

PLOT.CEL
ms consultants, inc.
msconsultants.com
Ohio DOT Workspace
70\71 East Interchange 2E
www.msconsultants.com
Batchplot Spec: \\msconsultants.com\files\production\03\60\06634_2E\standards\plotdrv\batchplt.spc
Pen Table: N:\03\60\06634_2E\standards\tables\V8i_ms_std_06634_2D_Plan View_NoClouds.tbl
Plot Driver: \\msconsultants.com\files\Standards\ustn\ohdot\v8i\ms\plotting\PDF.pltcfg
34" x 22"
Model: Sheet
Printed: 2/12/2019 @ 2:20:36 PM
File: N:\03\60\06634_2E\mot\sheets\105322MY601B01.dgn
View: FENCE_VIEW1
By: hbrendlinger

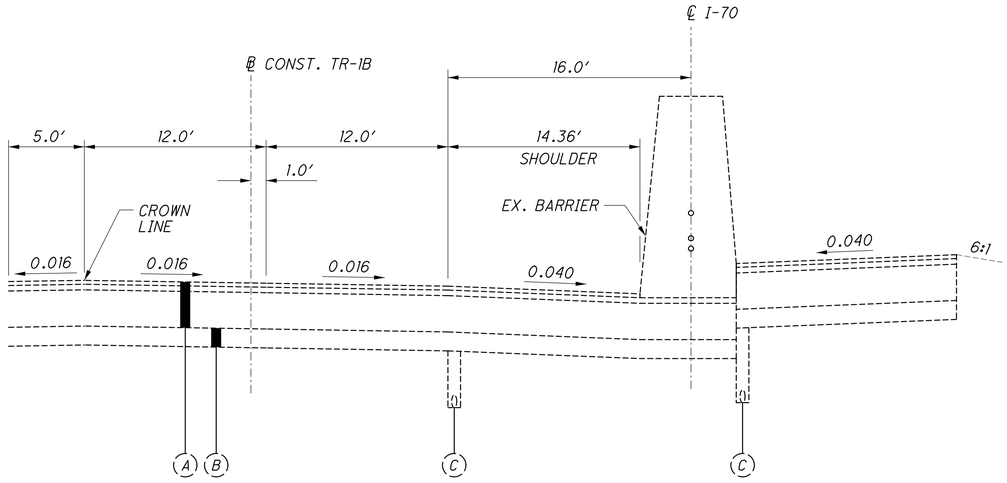

ADJOINING TYPICAL SECTION - TR-1B

SECTION APPLIES:
STA. 50+00.00

LEGEND

1. ITEM 441 - 1.5" ASPHALT CONCRETE SURFACE, TYPE 1, PG64-22, A.P.P.
2. ITEM 407 - TACK COAT FOR INTERMEDIATE COURSE (0.04 GAL/SY)
3. ITEM 441 - 1.75" ASPHALT CONCRETE INTERMEDIATE COURSE, TYPE 2, PG64-22, A.P.P.
4. ITEM 407 - TACK COAT (0.075 GAL/SY)
5. ITEM 302 - 5.5" ASPHALT CONCRETE BASE, PG64-22, A.P.P.
6. ITEM 304 - 6" AGGREGATE BASE, A.P.P.
7. ITEM 441 - VARIABLE DEPTH ASPHALT CONCRETE INTERMEDIATE COURSE, TYPE 2, PG64-22
8. ITEM 302 - VARIABLE DEPTH ASPHALT CONCRETE BASE, PG64-22
9. ITEM 304 - VARIABLE DEPTH AGGREGATE BASE

LEGEND FOR EXISTING PAVEMENT

A. 14.75" ASPHALT CONCRETE
B. 6" AGGREGATE BASE
C. UNDERDRAIN

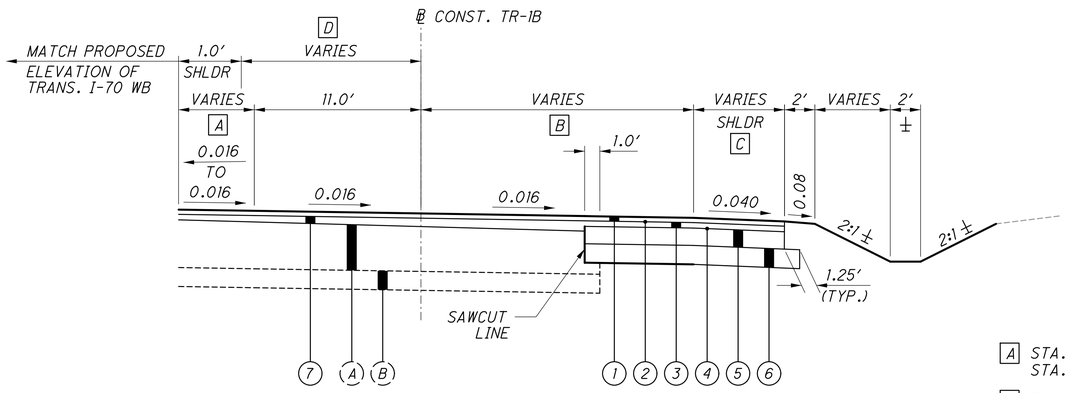

NORMAL SECTION - TR-1B

SECTION APPLIES:
STA. 50+00.00 TO STA. 52+05.38 = 205.38 LIN. FT.
STA. 53+80.26 TO STA. 55+73.64 = 193.38 LIN. FT.

* SEE SUPERELEVATION TABLES

± UNLESS OTHERWISE SHOWN IN CROSS SECTIONS

A. STA. 50+00.00 TO STA. 50+97.51 = 5.0'
STA. 50+97.51 TO STA. 52+05.38 = 5.0' - 5.06'

B. STA. 50+00.00 TO STA. 50+97.51 = 18.0'
STA. 50+97.51 TO STA. 52+05.38 = 18.0' - 17.94'

C. STA. 50+00.00 TO STA. 50+83.47 = 11.37' - 4.00'
STA. 50+83.47 TO STA. 52+05.38 = 4.0'

D. STA. 50+00.00 TO STA. 50+97.51 = 15.0'
STA. 50+97.51 TO STA. 52+05.38 = 15.0' - 15.06'
STA. 53+80.26 TO STA. 54+23.17 = 15.06'
STA. 54+23.17 TO STA. 55+73.64 = 15.06' - 12.33'

CALCULATED
CHECKED

MOT - TYPICAL SECTIONS - TR-1B (I-70 EB TO I-71 NB)
STA 50+00.00 TO STA 52+05.38

FRA-70-14.54

ms consultants, inc.

PLOT.CEL

ms consultants, inc.
msconsultants.com

www.msconsultants.com
Ohio DOT Workspace
70\71 East Interchange 2E
PDF: ohdot\V8i
DGN: 60-06634_2E_Columbus

Batchplot Spec: \\msconsultants.com\files\production\03\60\06634_2E\standards\plotdir\batchplt.spc
Pen Table: N:\03\60\06634_2E\standards\tables\V8i_ms_std_06634_2D_Plan View_NoClouds.tbl
Plot Driver: \\msconsultants.com\files\Standards\ustn\ohdot\v8i\ms\plotting\PDF.pltcfg

Model: Sheet
Printed: 2/12/2019 @ 2:20:37 PM
File: N:\03\60\06634_2E\mot\sheets\105322MT601B02.dgn
View: FENCE_VIEW1
By: hbrendlinger

34" x 22"

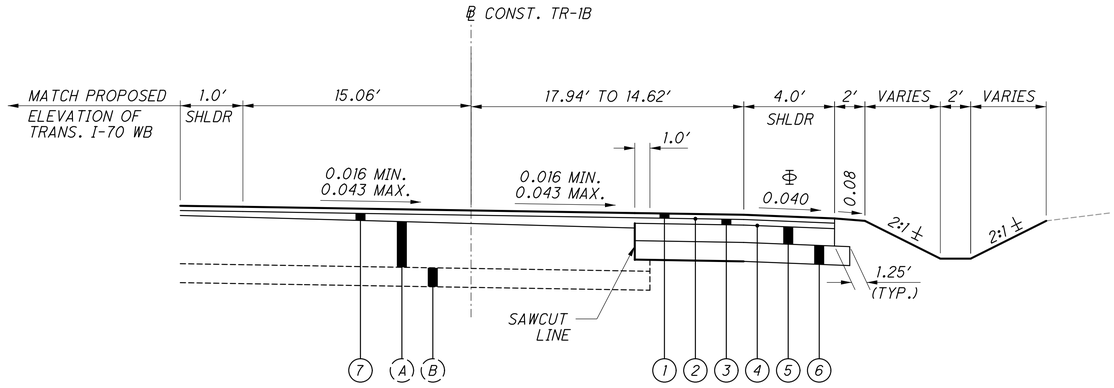

NORMAL SECTION - TR-1B

SECTION APPLIES:
STA. 52+05.38 TO STA. 53+80.26 = 174.88 L.F.

Φ OR RATE OF SUPER ELEVATION, WHICHEVER IS GREATER

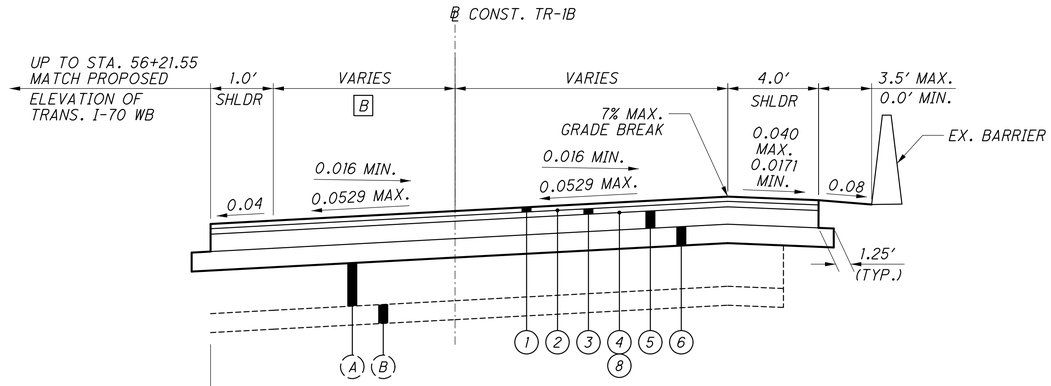

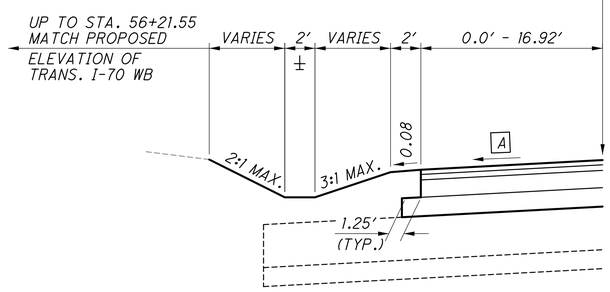

STA. 58+50.00 TO STA. 59+25.00 = 75.0 L.F.

SUPERELEVATED SECTION - TR-1B

SECTION APPLIES:
STA. 55+73.64 TO STA. 59+25.00 = 351.36 L.F.

± UNLESS OTHERWISE SHOWN IN CROSS SECTIONS

LEGEND

1. *ITEM 441 - 1.5″ ASPHALT CONCRETE SURFACE, TYPE 1, PG64-22, A.P.P.*
2. *ITEM 407 - TACK COAT FOR INTERMEDIATE COURSE (0.04 GAL/SY)*
3. *ITEM 441 - 1.75″ ASPHALT CONCRETE INTERMEDIATE COURSE, TYPE 2, PG64-22, A.P.P.*
4. *ITEM 407 - TACK COAT (0.075 GAL/SY)*
5. *ITEM 302 - 5.5″ ASPHALT CONCRETE BASE, PG64-22, A.P.P.*
6. *ITEM 304 - 6″ AGGREGATE BASE, A.P.P.*
7. *ITEM 441 - VARIABLE DEPTH ASPHALT CONCRETE INTERMEDIATE COURSE, TYPE 2, PG64-22*
8. *ITEM 302 - VARIABLE DEPTH ASPHALT CONCRETE BASE, PG64-22*
9. *ITEM 304 - VARIABLE DEPTH AGGREGATE BASE*

LEGEND FOR EXISTING PAVEMENT

- *(A) 14.75″ ASPHALT CONCRETE*
- *(B) 6″ AGGREGATE BASE*
- *(C) UNDERDRAIN*

- *[A] TIE PROPOSED PAVEMENT INTO EXISTING*
- *[B] STA. 55+73.64 TO STA. 55+86.98 = 12.33′ - 12.00′*
  STA. 55+86.98 TO STA. 59+25.00 = 12.00′

CALCULATED | CHECKED

MOT - TYPICAL SECTIONS - TR-1B (I-70 EB TO I-71 NB)
STA. 52+05.38 TO STA. 59+25.00

FRA-70-14.54

ms consultants, inc.

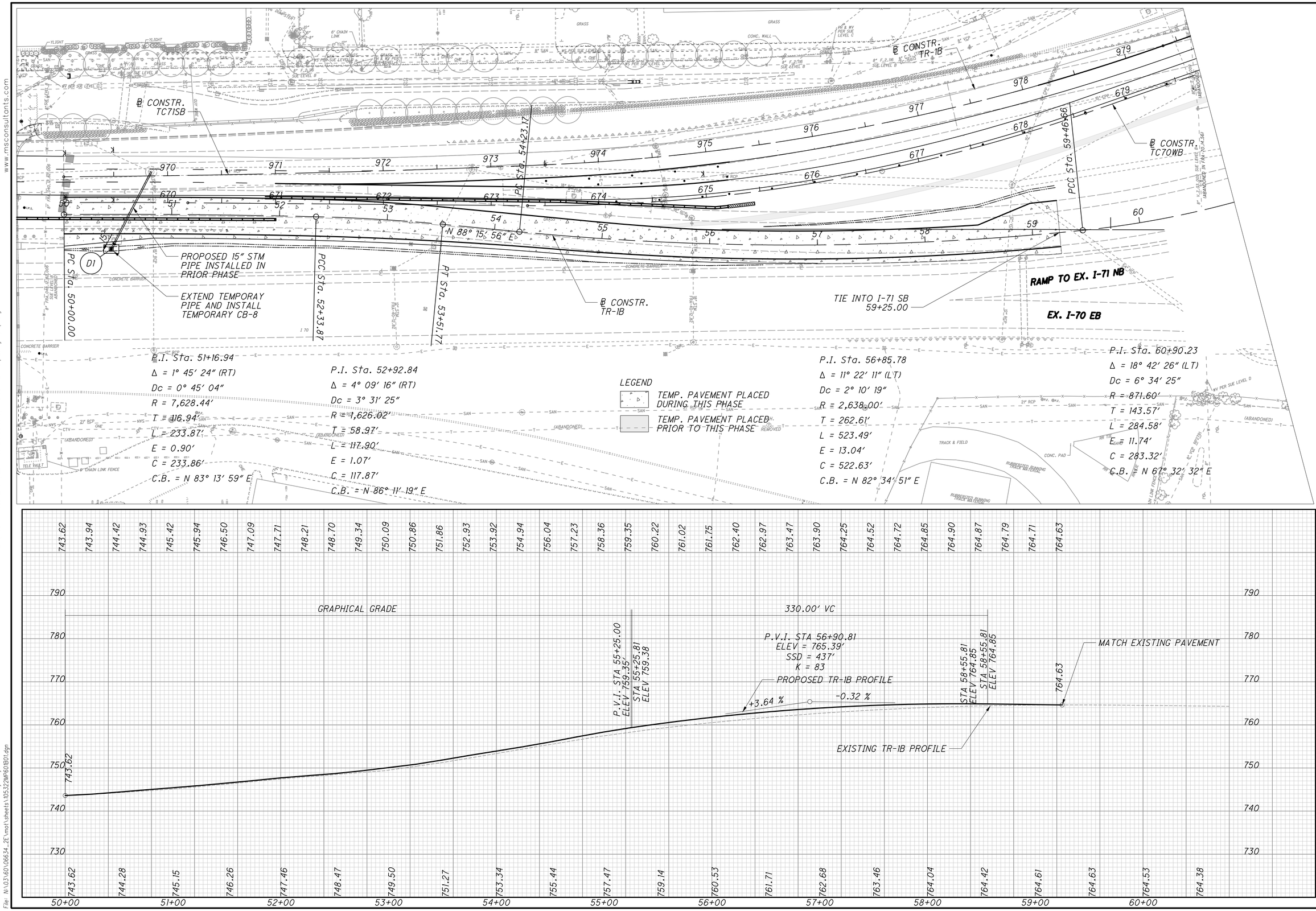

PLOT.CEL

ms consultants, inc.
msconsultants.com

Ohio DOT Workspace
70\71 East Interchange 2E
www.msconsultants.com

Batchplot Spec: \\msconsultants.com\files\production\03\60\06634_2E\standards\plotdrv\batchplt.spc
Pen Table: N:\03\60\06634_2E\standards\tables\V8i_ms_std_06634_2D_Plan View.tbl
Plot Driver: \\msconsultants.com\files\Standards\ustn\ohdot\v8i\ms\plotting\PDF.pltcfg

34" x 22"

Model: Sheet
Printed: 9/28/2018 @ 10:18:31 AM
File: N:\03\60\06634_2E\mot\sheets\105322MP601B01.dgn
View: FENCE_VIEW1
By: kryan

0 20 40 80
HORIZONTAL SCALE IN FEET

CALCULATED
CHECKED

MOT - PLAN & PROFILE TR-1B

FRA-70-14.48

311
2317

ms consultants, inc.

34" x 22"

0 1"
0.5"

Model: Sheet
Printed: 9/28/2018 @ 10:18:34 AM
File: N:\03\60\06634_2E\mot\sheets\105322MXL601B.dgn
View: FENCE_VIEW1
By: kryan

Batchplot Spec: \\msconsultants.com\files\production\03\60\06634_2E\standards\plotdrv\batchplt.spc
Pen Table: N:\03\60\06634_2E\standards\tables\V8i_ms_std_06634_2D_Plan View.tbl
Plot Driver: \\msconsultants.com\files\Standards\ustn\ohdot\v8i\ms\plotting\PDF.pltcfg

DGF: ohdotV8i
PCF: 60-06634_2E_Columbus

Ohio DOT Workspace
70\71 East Interchange 2E

ms consultants, inc.
msconsultants.com
PLOT.CEL

www.msconsultants.com

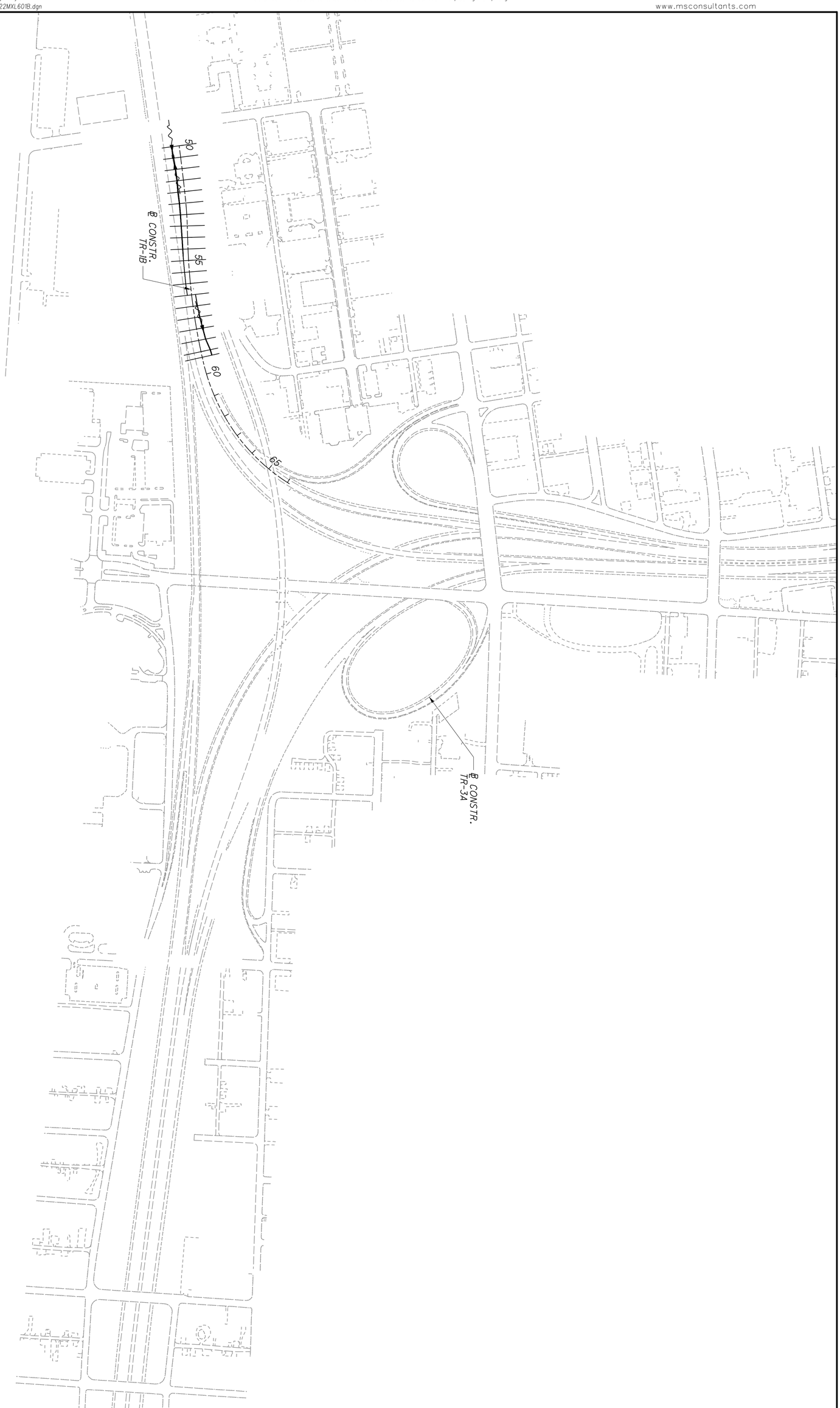

ms consultants, inc.

312
2317

FRA-70-14.54

MOT - PLAN & PROFILE TR-1B
STA. 50+00.00 TO STA. 59+25.00

CALCULATED
CHECKED

0 200
100 400
HORIZONTAL SCALE IN FEET

N

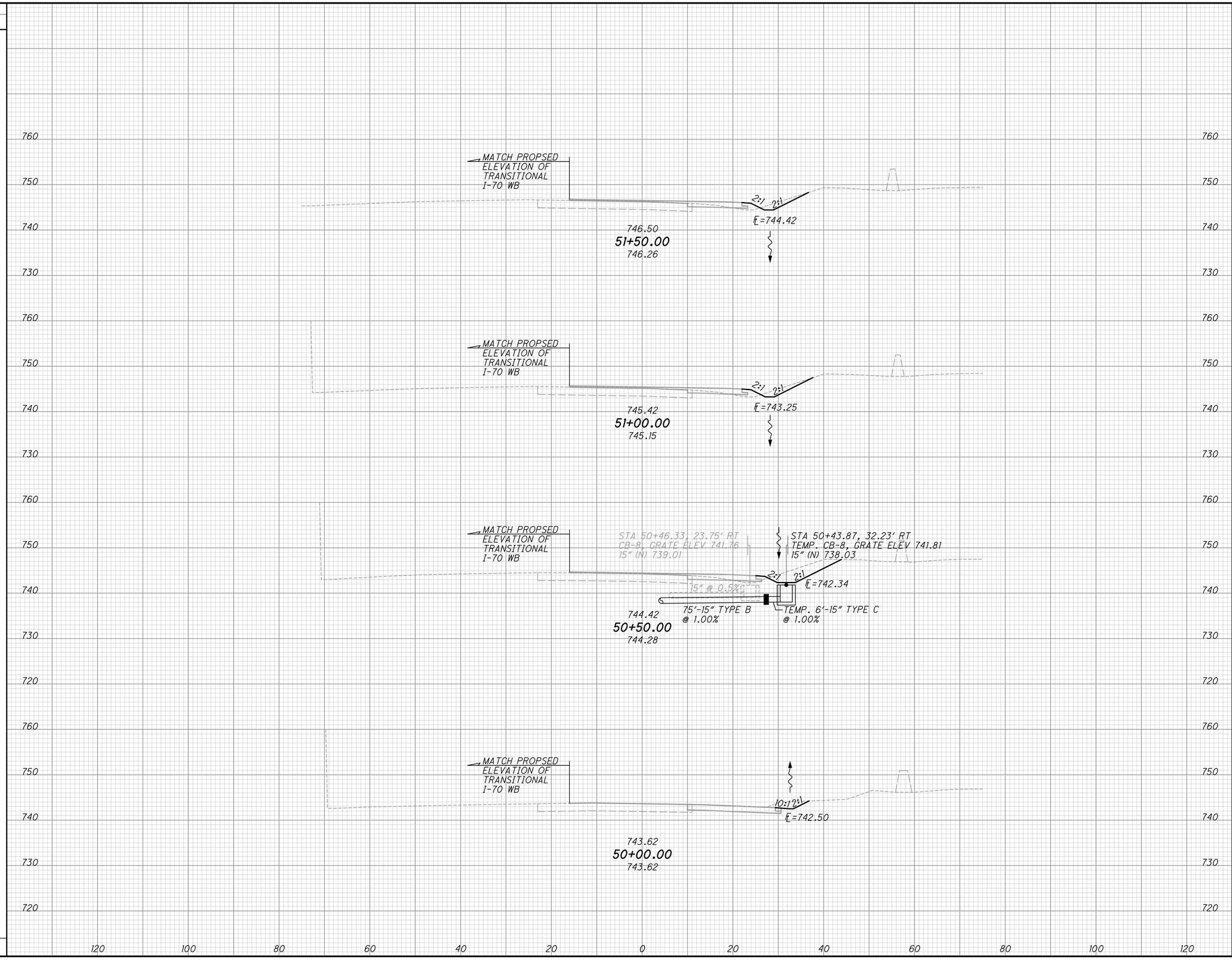

END AREA CUT	END AREA FILL	VOLUME CUT	VOLUME FILL
14	5		
		25	11
13	6		
		46	9
37	4		
		66	4
35	1		
		0	0
		137	24

CALCULATED

CHECKED

MOT-CROSS SECTION-TR-1B (I-70 EB TO I-71 NB)
STA. 50+00.00 TO STA. 51+50.00

FRA-70-14.54

313
2317

ms consultants, inc.

PLOT.CEL

ms consultants, inc.
msconsultants.com

Ohio DOT Workspace
70\71 East Interchange 2E
www.msconsultants.com

Batchplot Spec: \\msconsultants.com\files\production\03\60\06634_2E\standards\plotdrv\batchplt.spc
Pen Table: N:\03\60\06634_2E\standards\tables\V8i_ms_std_06634_2D_Plan View.tbl
Plot Driver: \\msconsultants.com\files\Standards\ustn\ohdot\v8i\ms\plotting\PDF.pltcfg

34" x 22"

Model: XS_SHEET_50+00.00_TO_51+50.00View: FENCE_VIEW1
Printed: 9/28/2018 @ 10:18:36 AM By: kryan
File: N:\03\60\06634_2E\mot\sheets\105322XS601B01.dgn

PLOT.CEL

ms consultants, inc.
msconsultants.com

Ohio DOT Workspace
70\71 East Interchange 2E

www.msconsultants.com

1"
0.5"
0

ODF: ohdot\V8i
PCF: 60-06634_2E_Columbus

34" x 22"

Batchplot Spec: \\msconsultants.com\files\production\03\60\06634_2E\standards\plotdir\batchplt.spc
Pen Table: N:\03\60\06634_2E\standards\tables\V8i_ms_std_06634_2D_Plan View.tbl
Plot Driver: \\msconsultants.com\files\Standards\usetn\ohdot\v8i\ms\plotting\PDF.pltcfg

Model: XS_SHEET_52+00.00_TO_53+50.00View: FENCE_VIEW1
Printed: 9/28/2018 @ 10:18:38 AM By: kryan
File: N:\03\60\06634_2E\mot\sheets\105322\S601601.dgn

SEEDING	
END WIDTH	SQ. YDS.

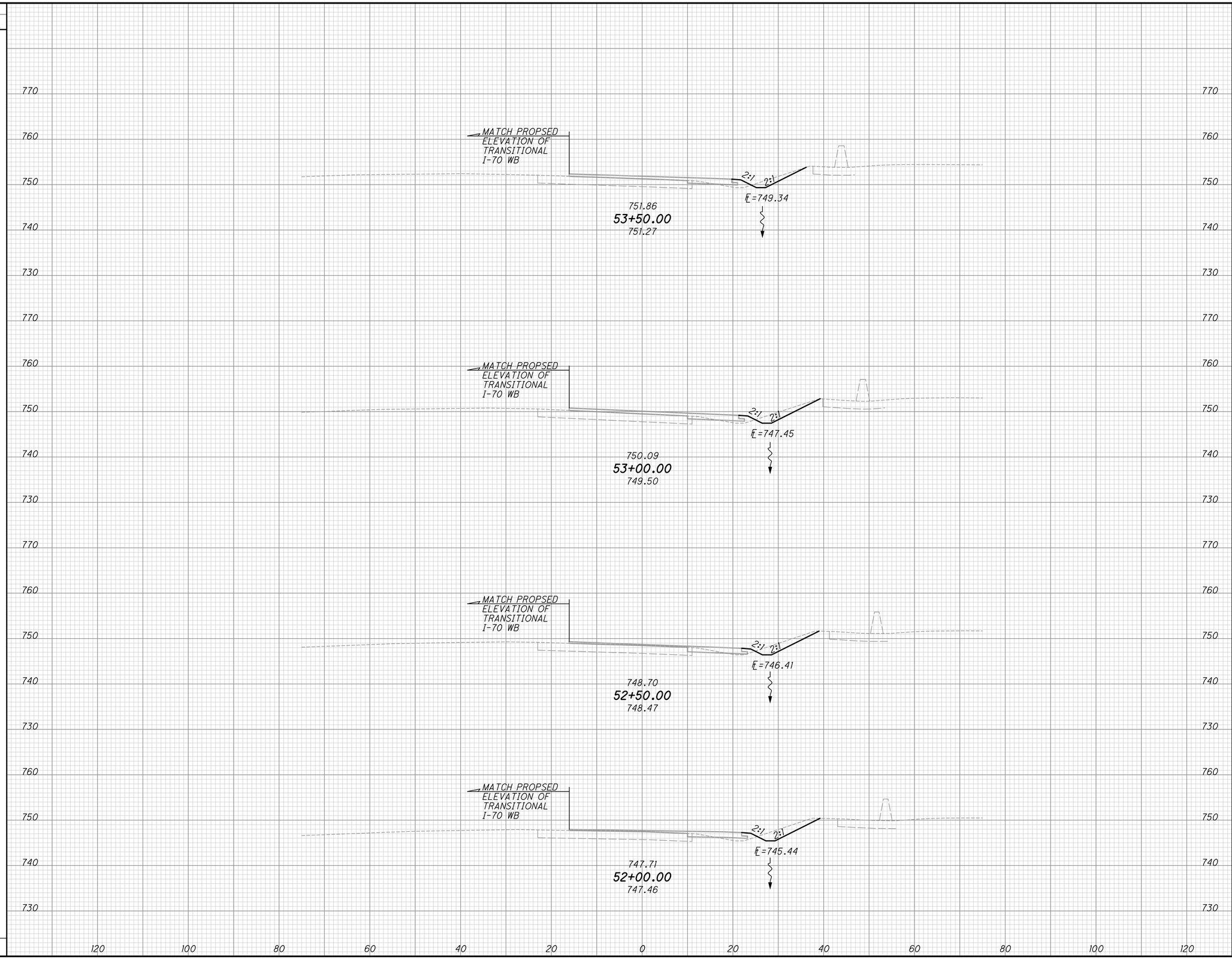

END AREA		VOLUME	
CUT	FILL	CUT	FILL
13	7		
		30	13
19	6		
		38	8
22	3		
		42	9
23	7		
		34	11
		144	41

CALCULATED

CHECKED

MOT-CROSS SECTION-TR-1B (I-70 EB TO I-71 NB)
STA. 52+00.00 TO STA. 53+50.00

FRA-70-14.54

314
2317

ms consultants, inc.

PLOT.CEL

ms consultants, inc.
msconsultants.com

Ohio DOT Workspace
70\71 East Interchange 2E
www.msconsultants.com

0 1" 0.5"

DGN: ohdot\V8i
PCF: 60-06634_2E_Columbus

Batchplot Spec: \\msconsultants.com\files\production\03\60\06634_2E\standards\plotdrv\batchplt.spc
Pen Table: N:\03\60\06634_2E\standards\tables\V8i_ms_std_06634_2D_Plan View.tbl
Plot Driver: \\msconsultants.com\files\Standards\ustn\ohdot\v8i\ms\plotting\PDF.pltcfg

Model: XS_SHEET_54+00.00_TO_55+50.00#view: FENCE_VIEW1
Printed: 9/28/2018 @ 10:18:39 AM By: kryan
File: N:\03\60\06634_2E\mot\sheets\105322\560601.dgn

34" x 22"

SEEDING	
END WIDTH	SQ. YDS.

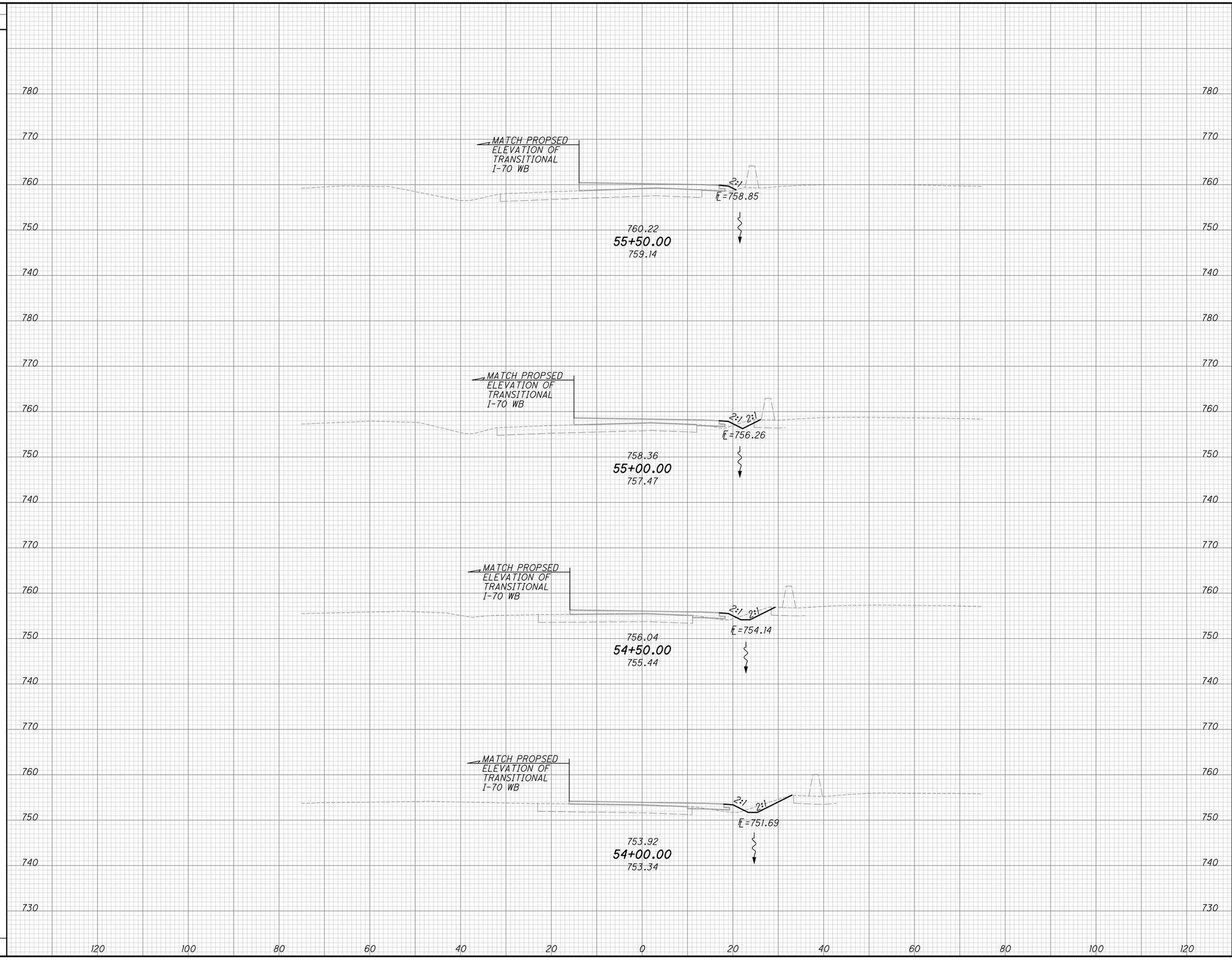

END AREA		VOLUME	
CUT	FILL	CUT	FILL
1	3		
		5	6
5	4		
		12	7
9	4		
		17	10
10	7		
		22	13
		56	36

CALCULATED

CHECKED

MOT-CROSS SECTION-TR-1B (I-70 EB TO I-71 NB)
STA. 54+00.00 TO STA. 55+50.00

FRA-70-14.54

ms consultants, inc.

PLOT.CEL

ms consultants, inc.
msconsultants.com

www.msconsultants.com

Ohio DOT Workspace
70\71 East Interchange 2E

0 0.5" 1"

ODF: ohdot\V8i
PCF: 60-06634_2E_Columbus

Batchplot Spec: \\msconsultants.com\files\production\03\60\06634_2E\standards\plotdrv\batchplt.spc
Pen Table: H:\03\60\06634_2E\standards\tables\V8i_ms_std_06634_2D_Plan View.tbl
Plot Driver: \\msconsultants.com\files\Standards\usetn\ohdot\v8i\ms\plotting\PDF.pltdrv

Model: XS_SHEET_56+00.00_TO_57+50.00
Printed: 9/28/2018 @ 10:18:40 AM
File: N:\03\60\06634_2E\mot\sheets\V05322XS60TB01.dgn

View: FENCE_VIEW1
By: kryan

34" x 22"

SEEDING	
END WIDTH	SQ. YDS.

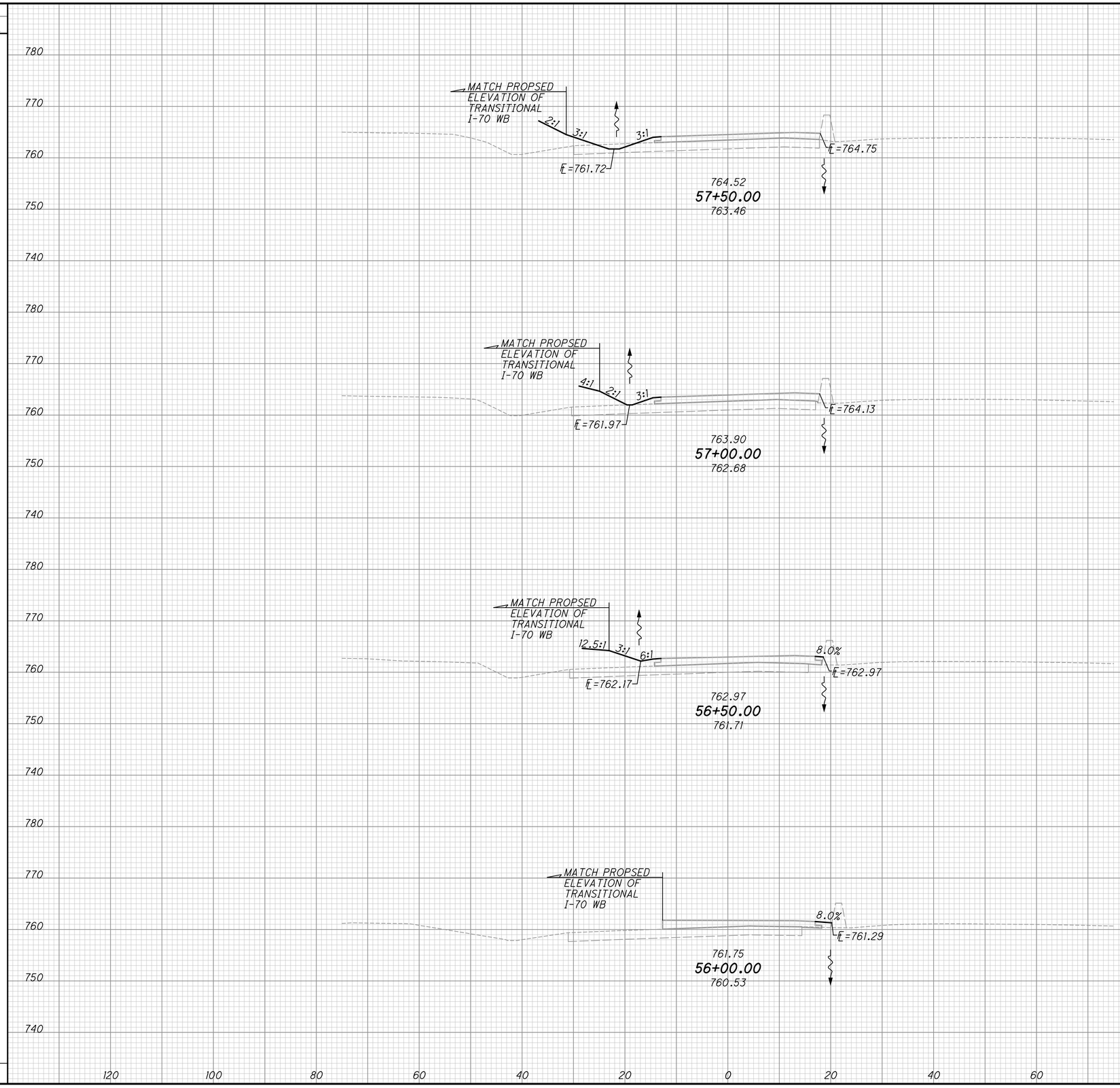

END AREA		VOLUME	
CUT	FILL	CUT	FILL
0	10		
		0	19
0	11		
		0	28
0	19		
		0	20
1	3		
		1	5
		1	72

CALCULATED

CHECKED

MOT-CROSS SECTION-TR-1B (I-70 EB TO I-71 NB)
STA. 56+00.00 TO STA. 57+50.00

FRA-70-14.54

316
2317

ms consultants, inc.

PLOT.CEL

ms consultants, inc.
msconsultants.com

www.msconsultants.com

Ohio DOT Workspace
70\71 East Interchange 2E

1" 0.5" 0

ODF: ohdot\V8i
PCF: 60-06634_2E_Columbus

Batchplot Spec: \\msconsultants.com\files\production\03\60\06634_2E\standards\plotdir\batchplt.spc
Pen Table: N:\03\60\06634_2E\standards\tables\V8i_ms_std_06634_2D_Plan View.tbl
Plot Driver: \\msconsultants.com\files\Standards\usetn\ohdot\v8i\ms\plotting\PDF.pltcfg

Model: XS_SHEET_58+00.00_TO_59+25.00
Printed: 9/28/2018 @ 10:18:41 AM
File: N:\03\60\06634_2E\mot\sheets\105322XS60TB01.dgn

View: FENCE_VIEW1
By: kryan

34" x 22"

SEEDING	
END WIDTH	SQ. YDS.

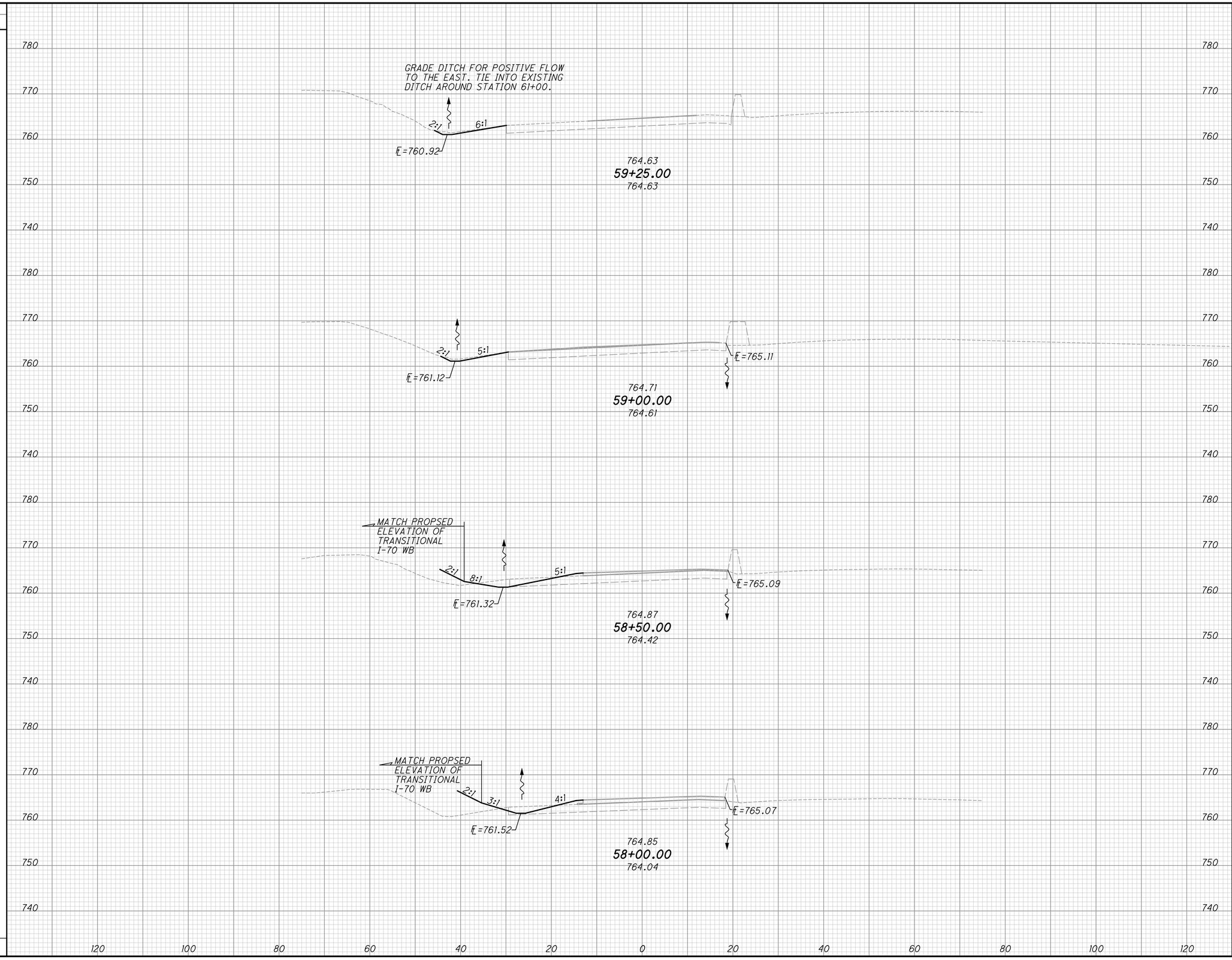

END AREA		VOLUME	
CUT	FILL	CUT	FILL
LT. DITCH 61+00		12	0
4	0		
		4	0
4	0		
		11	3
8	3		
		8	9
1	7		
		1	15
		36	27

CALCULATED

CHECKED

MOT-CROSS SECTION-TR-1B (I-70 EB TO I-71 NB)
STA. 58+00.00 TO STA. 59+25.00

FRA-70-14.54

317
2317

PLOT.CEL

ms consultants, inc.
msconsultants.com

www.msconsultants.com
Ohio DOT Workspace
70\71 East Interchange 2E

0 0.5" 1"

PDF: ohdotV8i
PCF: 60-06634_2E_Columbus

Batchplot Spec: \\msconsultants.com\Files\production\03\60\06634_2E\standards\plotdrv\batchplt.spc
Pen Table: N:\03\60\06634_2E\standards\tables\V8i_ms_std_06634_2D_Plan View.tbl
Plot Driver: \\msconsultants.com\Files\Standards\astm\ohdot\v8i\ms\plotting\PDF.pltcfg

Model: Sheet
Printed: 9/28/2018 @ 10:18:43 AM
File: N:\03\60\06634_2E\rmol\sheets\105322ME60801.dgn
View: FENCE_VIEW1
By: krygn

34" x 22"

SUPERELEVATION TABLE

P.I STA 51+16.94 | Dc = 0° 45′ 04″

LEFT SIDE					CENTERLINE CONTROL		RIGHT SIDE					
EDGE ELEVATION	TRANSITION RATE	ELEVATION CORRECTION	CROSS SLOPE	WIDTH	STATION	PROFILE GRADE	WIDTH	CROSS SLOPE	ELEVATION CORRECTON	TRANSITION RATE	EDGE ELEVATION	REMARKS
743.72		N/A	MATCH EX.	16.00	50+00.00	743.62	18.00	MATCH EX.	N/A		743.41	PC
744.01		0.26	0.016	16.00	50+10.00	743.75	18.00	-0.016	-0.29		743.46	NC
744.20		0.26	0.016	16.00	50+25.00	743.94	18.00	-0.016	-0.29		743.65	
744.68		0.26	0.016	16.00	50+50.00	744.42	18.00	-0.016	-0.29		744.13	
745.19		0.26	0.016	16.00	50+75.00	744.93	18.00	-0.016	-0.29		744.64	
745.68		0.26	0.016	16.00	51+00.00	745.42	18.00	-0.016	-0.29		745.13	
746.20		0.26	0.016	16.01	51+25.00	745.94	17.99	-0.016	-0.29		745.65	
746.76		0.26	0.016	16.02	51+50.00	746.50	17.98	-0.016	-0.29		746.21	
747.35		0.26	0.016	16.03	51+75.00	747.09	17.97	-0.016	-0.29		746.80	
748.08	185:1	0.26	0.016	16.06	52+05.38	747.82	17.94	-0.016	-0.29	185:1	747.53	NC
748.63		0.42	0.026	16.06	52+25.00	748.21	17.94	-0.026	-0.50		747.71	
748.86		0.48	0.030	16.06	52+33.87	748.38	17.94	-0.030	-0.54		747.84	PT

SUPERELEVATION TABLE

P.I STA 52+92.84 | Dc = 3° 31′ 25″

LEFT SIDE					CENTERLINE CONTROL		RIGHT SIDE					
EDGE ELEVATION	TRANSITION RATE	ELEVATION CORRECTION	CROSS SLOPE	WIDTH	STATION	PROFILE GRADE	WIDTH	CROSS SLOPE	ELEVATION CORRECTON	TRANSITION RATE	EDGE ELEVATION	REMARKS
748.86	185:1	0.48	0.030	16.06	52+33.87	748.38	17.94	-0.030	-0.54	185:1	747.84	PC
749.31		0.61	0.038	16.06	52+50.00	748.70	17.94	-0.038	-0.68		748.02	
749.65		0.69	0.043	16.06	52+60.33	748.96	17.88	-0.043	-0.77		748.19	
750.03		0.69	0.043	16.06	52+75.00	749.34	17.73	-0.043	-0.76		748.58	FS
750.78		0.69	0.043	16.06	53+00.00	750.09	17.30	-0.043	-0.74		749.35	
751.55		0.69	0.043	16.06	53+25.00	750.86	16.64	-0.043	-0.72		750.14	
751.56		0.69	0.043	16.06	53+25.31	750.87	16.63	-0.043	-0.72		750.15	
752.36		0.50	0.031	16.06	53+50.00	751.86	15.75	-0.034	-0.54		751.32	
752.42	185:1	0.48	0.030	16.06	53+51.77	751.94	15.68	-0.030	-0.47	185:1	751.47	PT
753.24		0.31	0.019	16.06	53+75.00	752.93	14.80	-0.019	-0.28		752.65	
753.40		0.26	0.016	16.06	53+80.26	753.14	14.62	-0.016	-0.23		752.91	NC
754.18		0.26	0.016	16.06	54+00.00	753.92	14.01	-0.016	-0.22		753.70	

SUPERELEVATION TABLE

P.I. STA 56+85.78 | Dc = 2° 10′ 19″

LEFT SIDE					CENTERLINE CONTROL		RIGHT SIDE					
EDGE ELEVATION	TRANSITION RATE	ELEVATION CORRECTION	CROSS SLOPE	WIDTH	STATION	PROFILE GRADE	WIDTH	CROSS SLOPE	ELEVATION CORRECTON	TRANSITION RATE	EDGE ELEVATION	REMARKS
755.13		0.26	0.016	16.06	54+23.17	754.87	13.41	-0.016	-0.21		754.66	PC
755.20		0.26	0.016	16.06	54+25.00	754.94	13.37	-0.016	-0.21		754.73	
756.30		0.25	0.016	15.92	54+50.00	756.04	13.03	-0.016	-0.21		755.83	
757.48		0.25	0.016	15.56	54+75.00	757.23	13.00	-0.016	-0.21		757.02	
758.60		0.24	0.016	15.02	55+00.00	758.36	13.00	-0.016	-0.21		758.15	
759.58		0.23	0.016	14.46	55+25.00	759.35	13.00	-0.016	-0.21		759.14	
760.44		0.22	0.016	13.89	55+50.00	760.22	13.00	-0.016	-0.21		760.01	
761.19		0.21	0.016	13.33	55+73.61	760.98	13.00	-0.016	-0.21		760.77	NC
761.22		0.20	0.015	13.29	55+75.00	761.02	13.00	-0.015	-0.18		760.83	
761.79	185:1	0.039	0.003	13.00	56+00.00	761.75	13.00	-0.003	-0.04	185:1	761.71	
762.28		-0.12	-0.009	13.00	56+25.00	762.40	13.00	0.009	0.12		762.51	
762.68		-0.29	-0.022	13.00	56+50.00	762.97	13.00	0.022	0.29		763.26	
762.98		-0.42	-0.032	13.00	56+71.27	763.40	13.00	0.032	0.42		763.82	
763.05		-0.42	-0.032	13.00	56+75.00	763.47	13.00	0.032	0.42		763.89	
763.48		-0.42	-0.032	13.00	57+00.00	763.90	13.00	0.032	0.42		764.32	
763.83		-0.42	-0.032	13.00	57+25.00	764.25	13.00	0.032	0.42		764.67	
764.10		-0.42	-0.032	13.00	57+50.00	764.52	13.00	0.032	0.42		764.94	
764.30		-0.42	-0.032	13.00	57+75.00	764.72	13.00	0.032	0.42		765.14	
764.43		-0.42	-0.032	13.00	58+00.00	764.85	13.00	0.032	0.42		765.27	FS
764.48		-0.42	-0.032	13.00	58+25.00	764.90	13.00	0.032	0.42		765.32	
764.45		-0.42	-0.032	13.00	58+50.00	764.87	13.00	0.032	0.42		765.29	
764.37		-0.42	-0.032	13.00	58+75.00	764.79	13.00	0.032	0.42		765.21	
764.35		-0.42	-0.032	13.00	58+82.47	764.77	13.00	0.032	0.42		765.19	
764.18	185:1	-0.53	-0.041	13.00	59+00.00	764.71	13.00	0.041	0.53	185:1	765.24	
763.94		-0.69	-0.053	13.00	59+25.00	764.63	13.00	0.053	0.69		765.32	

CALCULATED | CHECKED

MOT - SUPERELEVATION TABLE TR-1B
(TEMP I-70 EB TO I-71 NB)

FRA-70-14.54

ms consultants, inc.

PLOT.CEL

ms consultants, inc.
msconsultants.com

Ohio DOT Workspace
70\71 East Interchange 2E
www.msconsultants.com

0 0.5" 1"

34" x 22"

Batchplot Spec: \\msconsultants.com\files\production\03\60\06634_2E\standards\plotdrv\batchplt.spc PCF: ohdot\V8i
Pen Table: \\msconsultants.com\files\Standards\usth\ohdot\V8i\ms\plotting\pen\V8i_ms_std.tbl PCF: 60-06634_2E_Columbus
Plot Driver: \\msconsultants.com\files\Standards\usth\ohdot\V8i\ms\plotting\PDF.pltcfg
Model: Sheet View: FENCE_VIEW1
Printed: 9/28/2018 @ 10:18:53 AM By: kryon
File: N:\03\60\06634_2E\mot\sheets\105322MB2001.dgn

LEGEND

- WORK AREA
- ROADWAY CLOSED DURING THIS PHASE
- ROADWAY CLOSED PRIOR TO THIS PHASE
- TEMPORARY PAVEMENT PLACED DURING THIS PHASE
- TEMPORARY PAVEMENT PLACED PRIOR TO THIS PHASE
- I-6 RETAINING WALL
- A DEBRIS SITE

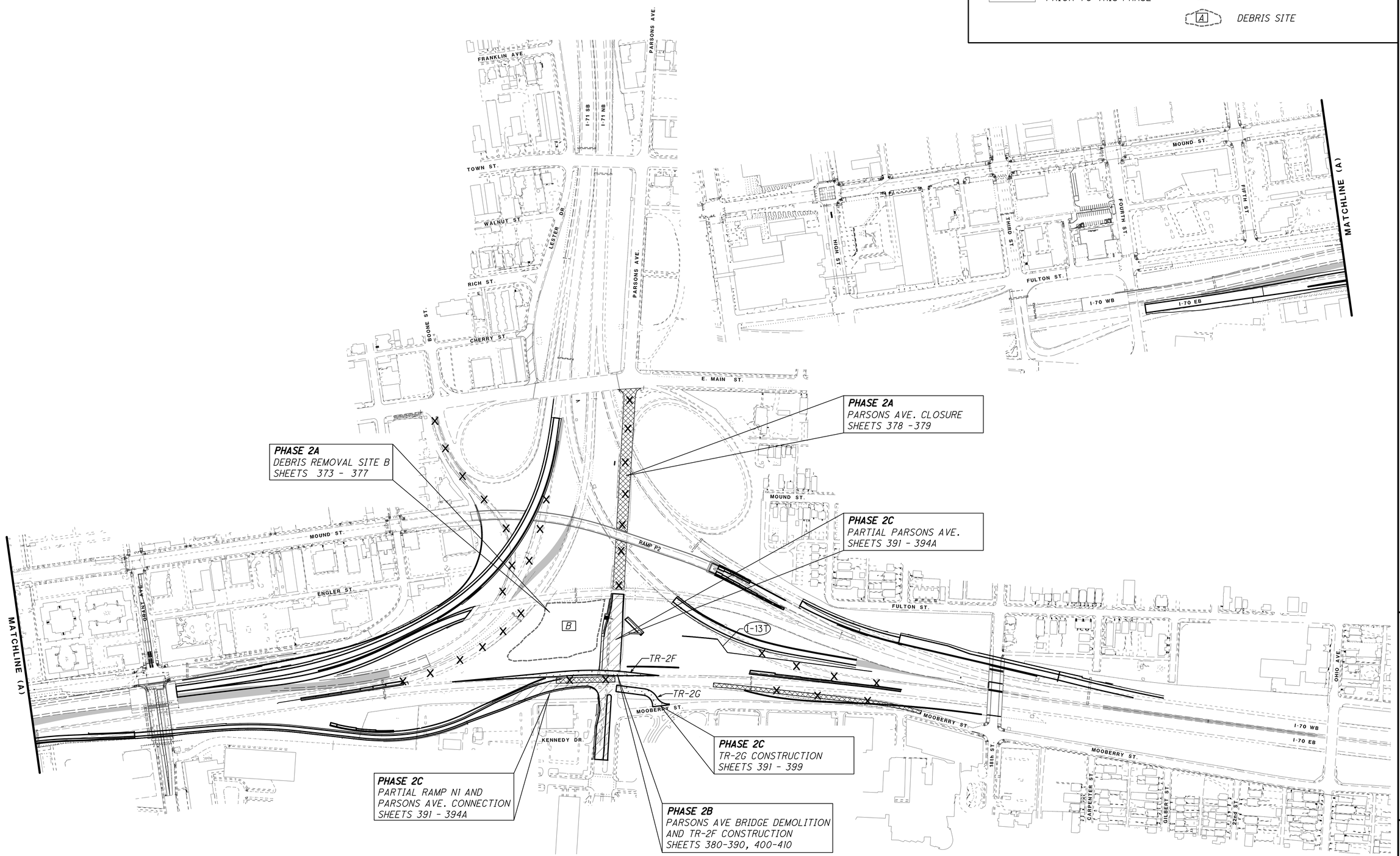

CALCULATED JAH
CHECKED JML

MAINTENANCE OF TRAFFIC - PHASE 2 SCHEMATIC

FRA-70-14.54

370
2317

PLOT.CEL

ms consultants, inc.
msconsultants.com

www.msconsultants.com

Ohio DOT Workspace
70\71 East Interchange 2E

1"
0.5"
0

OPF: ohdot\V8i
PCF: 60-06634_2E_Columbus

34" x 22"

Model: Sheet
Printed: 9/28/2018 @ 10:19:01 AM
File: N:\03\60\06634_2E\mat\Sheets\105322MN2001.dgn

View: FENCE_VIEW1
By: kryan

Batchplot Spec: \\msconsultants.com\files\production\03\60\06634_2E\standards\ohdot\v8i\batchplt.spc
Pen Table: \\msconsultants.com\files\Standards\usth\ohdot\V8i\ms\plotting\pen\V8i_ms_std.tbl
Plot Driver: \\msconsultants.com\files\Standards\usth\ohdot\v8i\ms\plotting\PDF.pltcfg

CALCULATED JAH
CHECKED JML

PHASE 2 SEQUENCE OF CONSTRUCTION

PHASE 2 SEQUENCE OF CONSTRUCTION

PHASE 2A (SHEETS 373 - 379)

1) CLOSE PARSONS AVENUE BETWEEN MOOBERRY STREET AND MAIN STREET. DETOUR TRAFFIC TO GRANT AVENUE.

2) BEGIN DEBRIS REMOVAL FROM SITE B. REMOVAL WORK FROM THIS SITE IS PERMITTED TO EXTEND INTO MULTIPLE PHASES BUT SHALL BE COMPLETED PRIOR TO BEGINNING WORK IN PHASE 2D.

PHASE 2B (SHEETS 380 - 390)

1) DURING A SINGLE WEEKEND (8PM FRIDAY TO 5AM MONDAY), CLOSE THE THIRD STREET ON-RAMP AND THE 18TH STREET EXIT AND DETOUR TRAFFIC TO LIVINGSTON AVENUE. REMOVE THE PARSONS AVENUE BRIDGE OVER I-70 EB AND ANY NECESSARY EARTHWORK REQUIRED TO CONSTRUCT TR-2F.

2) REOPEN THE THIRD STREET ON-RAMP AND THE 18TH STREET EXIT TO TRAFFIC AND COMPLETE CONSTRUCTION OF TR-2F.

PHASE 2C (SHEETS 391 - 394A)

1) SWITCH TRAFFIC ONTO TR-2F AND CONTINUE PARTIAL CONSTRUCTION OF RAMP N1 AT THE INTERSECTION WITH PARSONS AVENUE.

2) CONSTRUCT TR-2G AND THE WEST HALF OF PARSONS AVENUE. MAINTAIN ONE LANE IN EACH DIRECTION ON PARSONS AVENUE FROM CHILDREN'S CROSSROAD TO MOOBERRY STREET. MAINTAIN ACCESS TO ALL CHILDREN'S HOSPITAL DRIVEWAYS AT ALL TIMES.

FRA-70-14.54

371
2317

ms consultants, inc.

PLOT.CEL

ms consultants, inc.
msconsultants.com

www.msconsultants.com

Ohio DOT Workspace
70\71 East Interchange 2E

1"
0
0.5"

DGN: ohdot\V8i
PCF: 60-06634_2E_Columbus

Batchplot Spec: \\msconsultants.com\Files\Production\03\60\06634_2E\standards\plotdr\batchplt.spc
Pen Table: \\msconsultants.com\Files\Standards\usth\ohdot\v8i\ms\plotting\pen\V8i_ms_std.tbl
Plot Driver: \\msconsultants.com\Files\Standards\usth\ohdot\v8i\ms\plotting\PDF.pltcfg

Model: Sheet
Printed: 2/26/2019 @ 5:14:43 PM
File: \\msconsultants.com\Files\Production\03\60\06634_2E\mot\sheets\105322MN2002.dgn

View: FENCE_VIEW1
By: hbrendinger

34" x 22"

PHASE 2 SUMMARY

CONSTRUCTION CRITICAL TO NEXT PHASE

BRIDGE DEMOLITION
- PARSONS AVENUE BRIDGE OVER I-70

ROADWAY REMOVAL
- PARSONS AVENUE OVER I-70

DEBRIS REMOVAL
- SITE B

TEMPORARY ROADWAY CONSTRUCTION
- TR-2F: TEMP I-70 EB EXIT TO 18TH STREET
- TR-2G: TEMP MOOBERRY STREET CONNECTION

PERMANENT RETAINING WALL CONSTRUCTION
- WALL I-9A-1 BETWEEN RAMP N3 AND N1

PERMANENT ROADWAY CONSTRUCTION
- PARTIAL RAMP N1 FROM STATION 881+00± TO PROPOSED INTERSECTION WITH PARSONS AVENUE
- SOUTH HALF OF PROPOSED PARSONS AVENUE AND MOOBERRY STREET INTERSECTION

CONSTRUCTION AVAILABLE THIS PHASE
- MOOBERRY STREET
- PARTIAL I-70 EB AND RAMP Q3 EAST OF PARSONS AVENUE
- PARTIAL RAMP N4 BETWEEN EXISTING FLYOVER BRIDGE AND MAIN STREET BRIDGE
- WALLS I-13, I-13A, I-13B, I-13D, AND I-13E

CHILDREN'S HOSPITAL ACCESS DURING THIS PHASE

- GRANT AVENUE BRIDGE AND ROADWAY OPEN
- 18TH STREET BRIDGE OPEN
- PARSONS AVENUE SOUTH OF MOOBERRY STREET OPEN
- RAMP N1 TO 18TH STREET OFF-RAMP OR TEMPORARY MOOBERRY CONNECTION

LANE VALUE CONTRACT TABLE

ACTIVITY	AFFECTED ROADWAY(S)	RESTRICTION TYPE	RESTRICTION TIME	DISINCENTIVE
DEBRIS REMOVAL - SITE B	I-70 EB TO I-71 NB (TR-2D)	SINGLE LANE CLOSURE	10PM TO 5AM DAILY	$200 PER MIN PER LANE
PARSONS AVE. BRIDGE REMOVAL	18TH ST. OFF-RAMP	ROAD CLOSURE	8PM FRI - 5AM MON	$200 PER MIN PER LANE

WINDOW CONTRACT TABLE

ACTIVITY	AFFECTED ROADWAY(S)	RESTRICTION TYPE	RESTRICTION TIME	DISINCENTIVE
PARSONS AVE. CONSTRUCTION NORTH OF MOOBERRY ST.	PARSONS AVE.	ROAD CLOSURE	60 CALENDAR DAYS	$2000 PER DAY

NOTE: SEE SHEET 111 FOR DISINCENTIVE AMOUNTS ASSOCIATED WITH ANY MAINLINE ROADWAY OR SYSTEM RAMP OVERNIGHT CLOSURE REQUIRED IN THIS PHASE.

PROPOSED ROADWAY DESCRIPTIONS

ROAD NAME	DESCRIPTION (DIRECTION OF STATIONING)
RAMP Q1	I-71 SB TO I-70 WB
RAMP Q3	I-71 SB TO I-70 EB
RAMP N4	I-70 EB TO I-71 NB
RAMP P4	I-70 WB TO I-71 NB
RAMP P5	I-70 WB TO I-670
RAMP N1	I-70 EB TO PARSONS AVE
RAMP N2	FULTON ST EB (BY WAY OF RAMP N3) TO I-71 NB
RAMP N3	FULTON ST EB TO I-70 EB
RAMP P1	I-70 WB (BY WAY OF RAMP P2) TO PARSONS AVE
RAMP P2	I-70 WB TO MOUND ST WB
RAMP P6	MAIN ST TO I-71 NB/I-670

TEMPORARY ROADWAY DESCRIPTIONS

PLAN VIEW LABEL	DESCRIPTION
TR-1B	TEMP I-70 EB TO I-71 NB
TR-1D	TEMP I-70 EB
TR-2A	TEMP I-70 EB/WB CONNECTION
TR-2D	TEMP I-70 EB TO I-71 NB
TR-2F	TEMP I-70 EB EXIT TO 18TH ST
TR-2G	TEMP MOOBERRY ST CONNECTION

CALCULATED JAH
CHECKED JML

PHASE 2 - SUMMARY & DISINCENTIVE CHART

FRA-70-14.54

372
2317

34" x 22"

Model: Sheet
Printed: 9/28/2018 @ 10:19:09 AM
File: N:\03\60\06634_2E\mot\sheets\105322MP0009.dgn
View: FENCE_VIEW1
By: kryan

Batchplot Spec: \\msconsultants.com\files\production\03\60\06634_2E\standards\plotdrv\batchplt.spc
Pen Table: \\msconsultants.com\files\Standards\ustn\ohdot\V8i\ms\plotting\pen\V8i_ms_std.tbl
Plot Driver: \\msconsultants.com\files\Standards\ustn\ohdot\v8i\ms\plotting\PDF.pltcfg
PCF: ohdotV8i
PCF: 60-06634_2E_Columbus

0 1"
0.5"

Ohio DOT Workspace
70\71 East Interchange 2E

ms consultants, inc.
msconsultants.com
PLOT.CEL

www.msconsultants.com

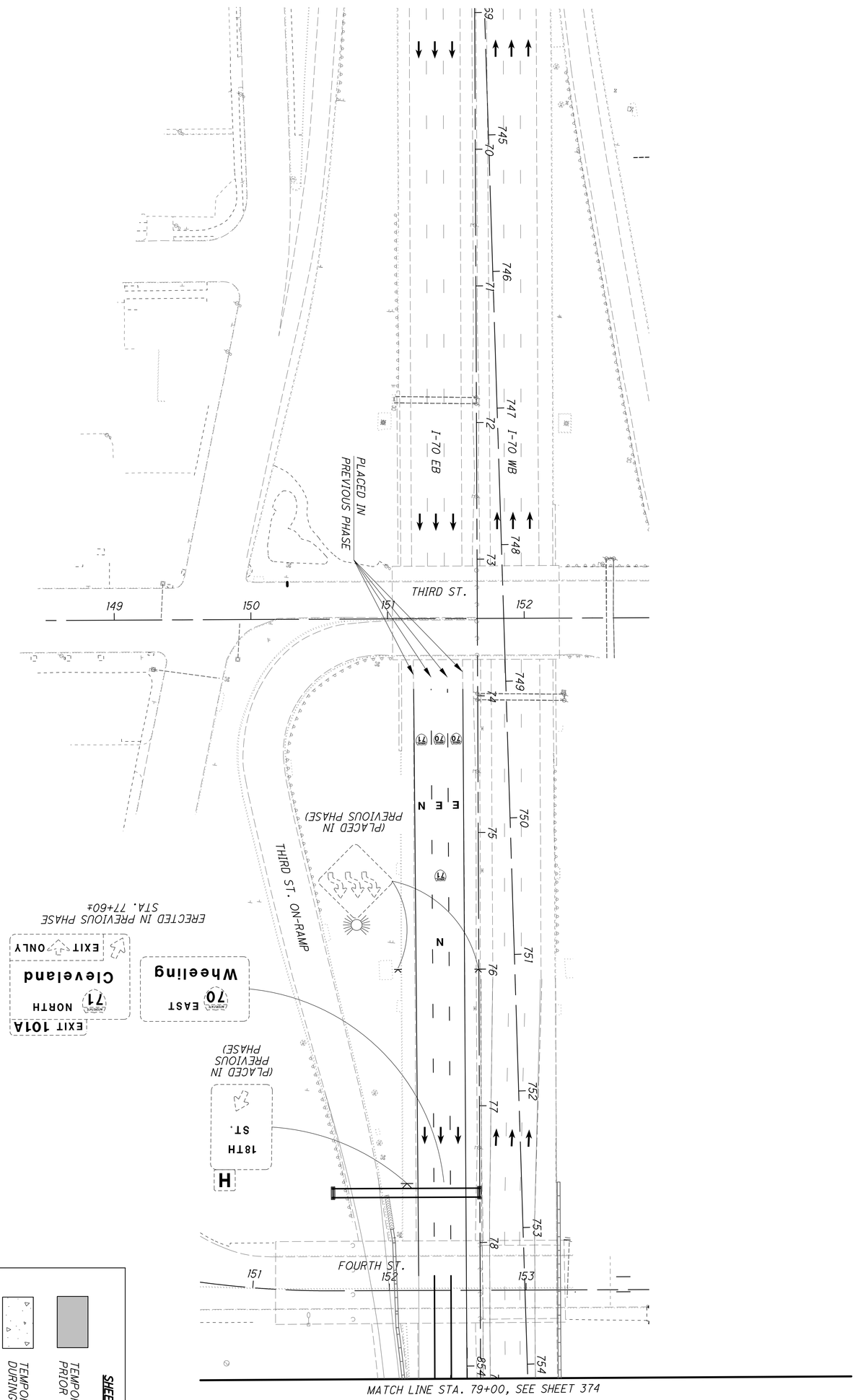

SHEET LEGEND

- TEMPORARY PAVEMENT PLACED PRIOR TO THIS PHASE
- TEMPORARY PAVEMENT PLACED DURING THIS PHASE
- WORK AREA

FOR COMPLETE LEGEND AND DRUM SPACING CHART, SEE SHEET 156

ms consultants, inc.

PLOT.CEL

ms consultants, inc.
msconsultants.com

www.msconsultants.com

Ohio DOT Workspace
70\71 East Interchange 2E

PCF: ohdot\V8i
PCF: 60-06634_2E_Columbus

Batchplot Spec: \\msconsultants.com\files\production\03\60\06634_2E\standards\plotdr\batchplt.spc
Pen Table: \\msconsultants.com\files\Standards\astm\ohdot\V8i\ms\plotting\pen\V8i_ms_std.tbl
Plot Driver: \\msconsultants.com\files\Standards\astm\ohdot\v8i\ms\plotting\PDF.pltcfg

Model: Sheet
Printed: 9/28/2018 @ 10:19:13 AM
File: N:\03\60\06634_2E\mot\sheets\105229MP0001.dgn

View: FENCE_VIEW1
By: kryan

34" x 22"

MATCH LINE STA. 1114+00, SEE SHEET 375

MATCH LINE STA. 79+00, SEE SHEET 373

WEST 70 RIGHT 2 LANES (PLACED IN PREVIOUS PHASE)

WI-HI6-36 (PLACED IN PREVIOUS PHASE)

50" PB PLACED IN PREVIOUS PHASE

I-70 WB

I-70 EB

TR-1D

RAMP N1

N 49° 39' 37" E

32" PB PLACED IN PREVIOUS PHASE

PAVEMENT MARKINGS PLACED IN PREVIOUS PHASE

WI-HI6-36 (PLACED IN PREVIOUS PHASE)

E5-HID-48 (PLACED IN PREVIOUS PHASE)

EXIT

SHEET LEGEND

TEMPORARY PAVEMENT PLACED PRIOR TO THIS PHASE

TEMPORARY PAVEMENT PLACED DURING THIS PHASE

WORK AREA

FOR COMPLETE LEGEND AND DRUM SPACING CHART, SEE SHEET 156

HORIZONTAL SCALE IN FEET
0 20 40 80

CALCULATED JAH
CHECKED JML

MAINTENANCE OF TRAFFIC - PHASE 2A
CONTRACTOR ACCESS-DEBRIS REMOVAL SITE B

FRA-70-14.54

374
2317

ms consultants, inc.

34" x 22"
0 0.5" 1"
Model: Sheet View: FENCE_VIEW1
Printed: 9/28/2018 @ 10:19:25 AM By: kryan
File: N:\03\60\06634_2E\mot\sheets\105322MP0002.dgn
Batchplot Spec: \\msconsultants.com\files\production\03\60\06634_2E\standards\plotdrv\batchplt.spc
Pen Table: \\msconsultants.com\files\Standards\ustn\ohdot\V8i\ms\plotting\pen\V8i_ms_std.tbl
Plot Driver: \\msconsultants.com\files\Standards\ustn\ohdot\v8i\ms\plotting\PDF.pltcfg
PCF: ohdotV8i
PCF: 60-06634_2E_Columbus
Ohio DOT Workspace
70\71 East Interchange 2E
ms consultants, inc.
msconsultants.com
PLOT.CEL
www.msconsultants.com

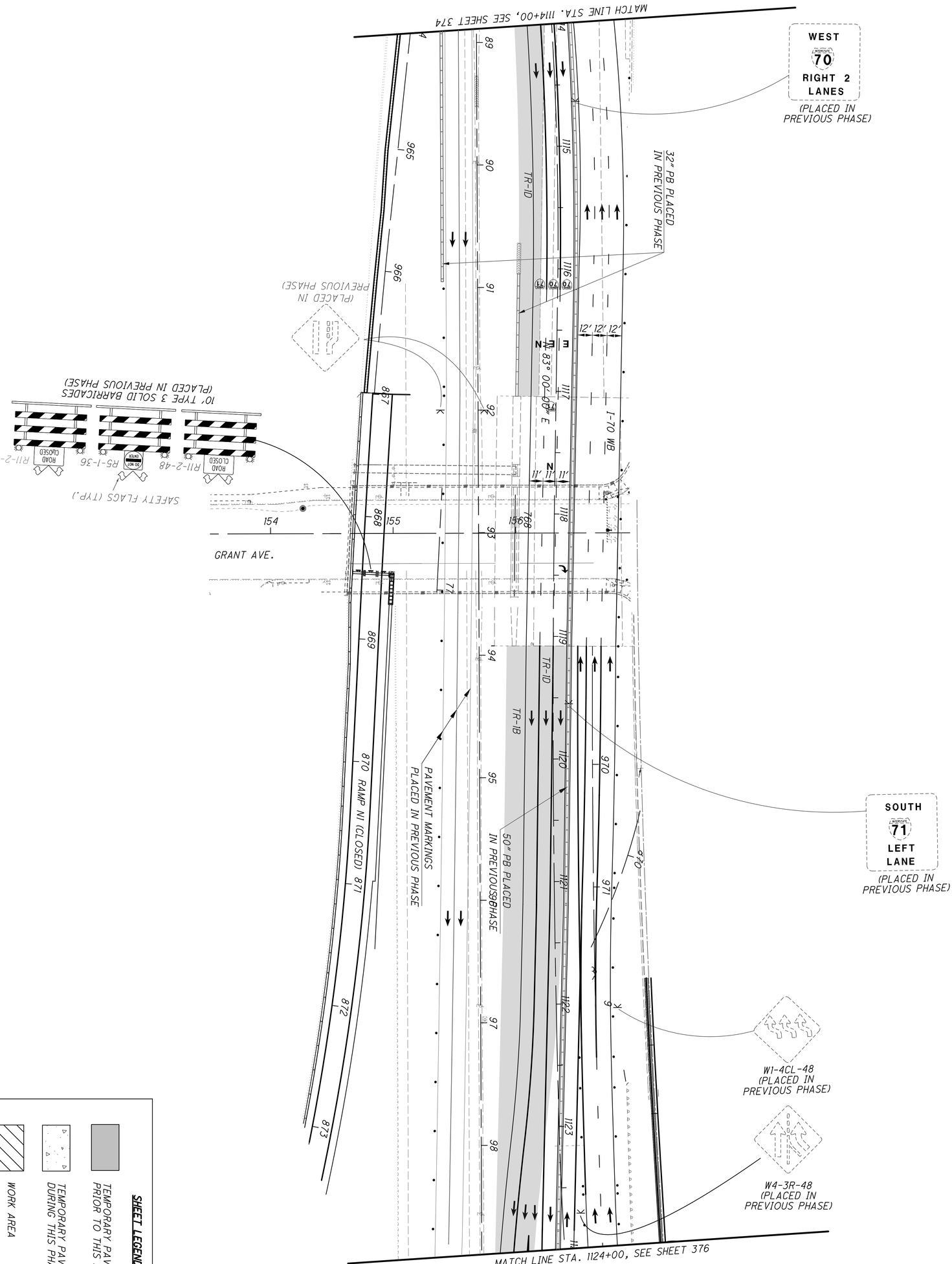

SHEET LEGEND

- TEMPORARY PAVEMENT PLACED PRIOR TO THIS PHASE
- TEMPORARY PAVEMENT PLACED DURING THIS PHASE
- WORK AREA

FOR COMPLETE LEGEND AND DRUM SPACING CHART, SEE SHEET 156

375 / 2317	FRA-70-14.54	MAINTENANCE OF TRAFFIC - PHASE 2A CONTRACTOR ACCESS-DEBRIS REMOVAL SITE B	CALCULATED JAH CHECKED JML	0 20 40 80 HORIZONTAL SCALE IN FEET	N

ms consultants, inc.

PLOT.CEL

ms consultants, inc.
msconsultants.com

www.msconsultants.com

Ohio DOT Workspace
70\71 East Interchange 2E

0 0.5" 1"

Batchplot Spec: \\msconsultants.com\files\production\03\60\06634_2E\standards\plotdr\batchplt.spc
Pen Table: \\msconsultants.com\files\Standards\astm\ohdot\V8i\ms\plotting\pen\V8i_ms_std.tbl
Plot Driver: \\msconsultants.com\files\Standards\astm\ohdot\V8i\ms\plotting\PDF.pltcfg

PDF: ohdot\V8i
PDF: 60-06634_2E_Columbus

34" x 22"

View: FENCE_VIEW1
By: Kryan

Model: Sheet
Printed: 9/28/2018 @ 10:19:31 AM
File: N:\03\60\06634_2E\mot\sheets\105322MP0003.dgn

SHEET LEGEND

TEMPORARY PAVEMENT PLACED PRIOR TO THIS PHASE

TEMPORARY PAVEMENT PLACED DURING THIS PHASE

WORK AREA

FOR COMPLETE LEGEND AND DRUM SPACING CHART, SEE SHEET 156

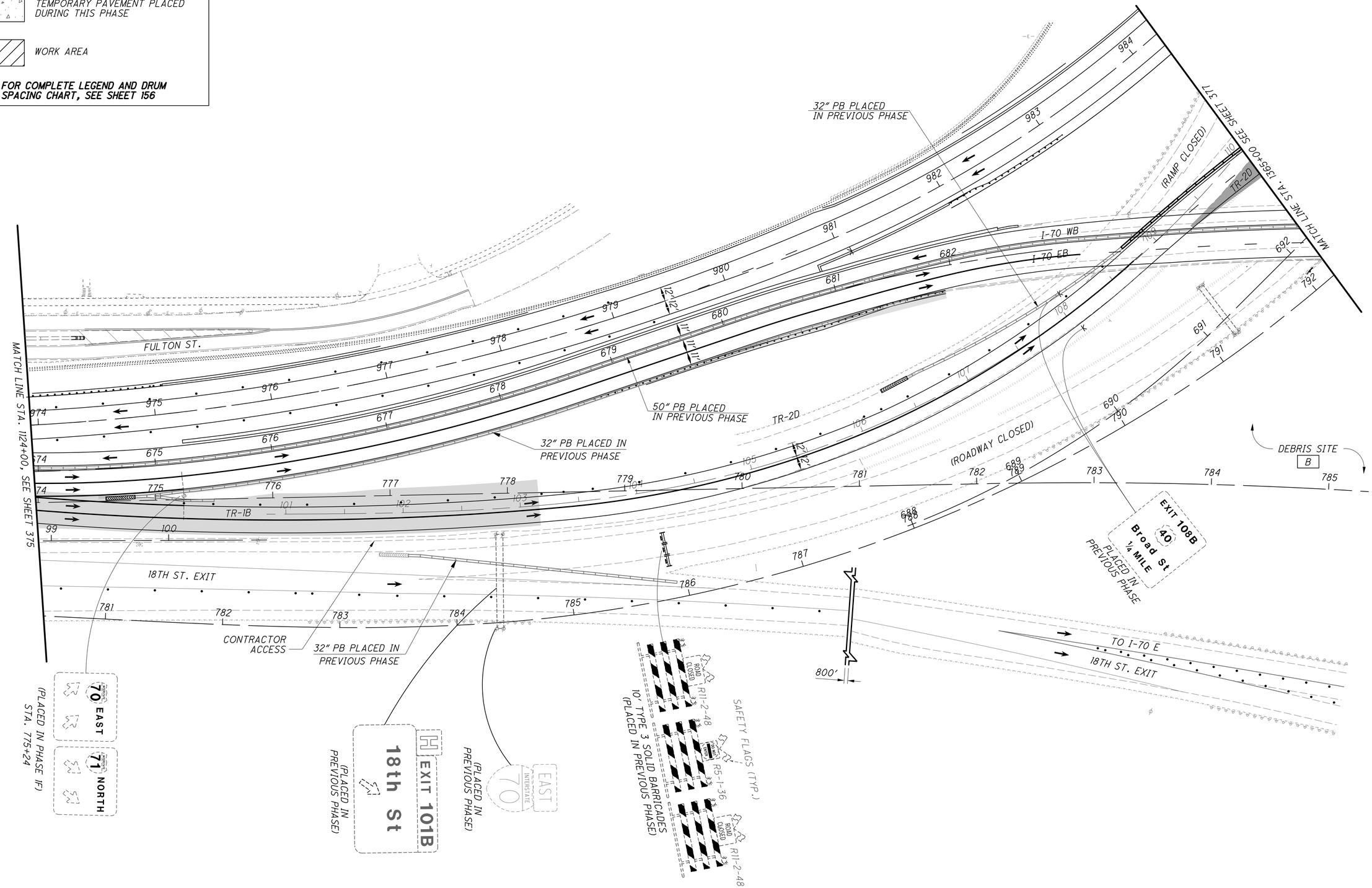

HORIZONTAL SCALE IN FEET
0 20 40 80

CALCULATED JAH
CHECKED JML

MAINTENANCE OF TRAFFIC - PHASE 2A
CONTRACTOR ACCESS-DEBRIS REMOVAL SITE B

FRA-70-14.54

376
2317

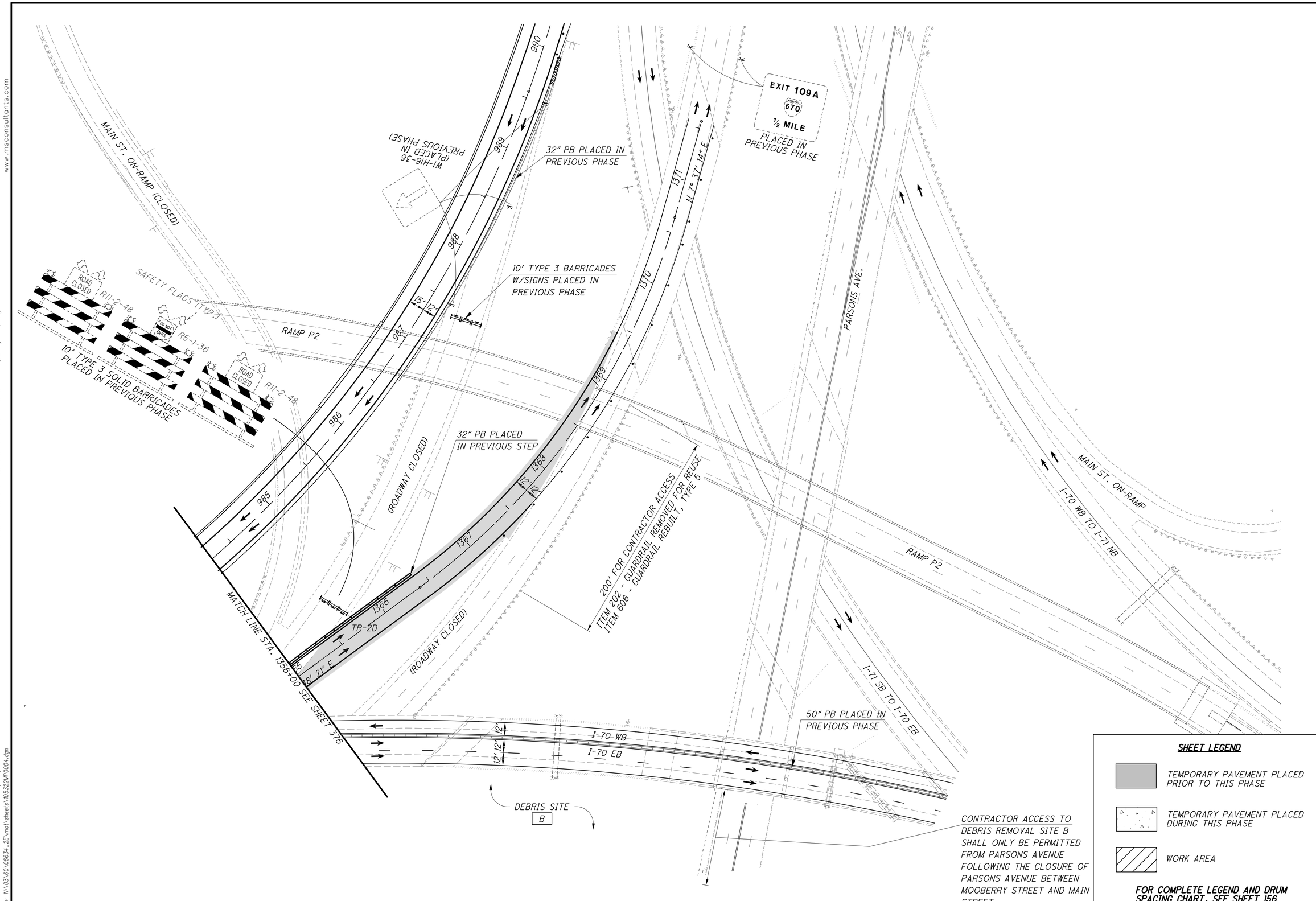

CONTRACTOR ACCESS TO DEBRIS REMOVAL SITE B SHALL ONLY BE PERMITTED FROM PARSONS AVENUE FOLLOWING THE CLOSURE OF PARSONS AVENUE BETWEEN MOOBERRY STREET AND MAIN STREET.

SHEET LEGEND

- TEMPORARY PAVEMENT PLACED PRIOR TO THIS PHASE
- TEMPORARY PAVEMENT PLACED DURING THIS PHASE
- WORK AREA

FOR COMPLETE LEGEND AND DRUM SPACING CHART, SEE SHEET 156

HORIZONTAL SCALE IN FEET: 0 20 40 80

CALCULATED JAH
CHECKED JML

MAINTENANCE OF TRAFFIC - PHASE 2A
CONTRACTOR ACCESS-DEBRIS REMOVAL SITE B

FRA-70-14.54

ms consultants, inc.

PLOT.CEL
ms consultants, inc.
msconsultants.com
Ohio DOT Workspace
70\71 East Interchange 2E
www.msconsultants.com
Batchplot Spec: \\msconsultants.com\files\production\03\60\06634_2E\standards\plotdrv\batchplt.spc
Pen Table: \\msconsultants.com\files\Standards\ustn\ohdot\V8i\ms\plotting\pen\V8i_ms_std.tbl
Plot Driver: \\msconsultants.com\files\Standards\ustn\ohdot\v8i\ms\plotting\PDF.pltcfg
Model: Sheet
Printed: 9/28/2018 @ 10:19:34 AM
File: N:\03\60\06634_2E\mot\sheets\105322MP0004.dgn
View: FENCE_VIEW1
By: kryan

PLOT.CEL

ms consultants, inc.
msconsultants.com

www.msconsultants.com

Ohio DOT Workspace
70\71 East Interchange 2E

DGN: ohdot\V8i
DGN: 60-06634_2E_Columbus

Batchplot Spec: \\msconsultants.com\files\production\03\60\06634_2E\standards\ohdot\v8i\batchplot.spc
Pen Table: \\msconsultants.com\files\Standards\ustn\ohdot\V8i\ms\plotting\pen\V8i_ms_std.tbl
Plot Driver: \\msconsultants.com\files\Standards\ustn\ohdot\v8i\ms\plotting\PDF.pltcfg

Model: Sheet
Printed: 9/28/2018 @ 10:19:37 AM
File: N:\03\60\06634_2E\mot\sheets\105322M02001.dgn

View: FENCE_VIEW1
By: kryan

34" x 22"

D3-1 48" X 12" (BLACK/ORANGE)

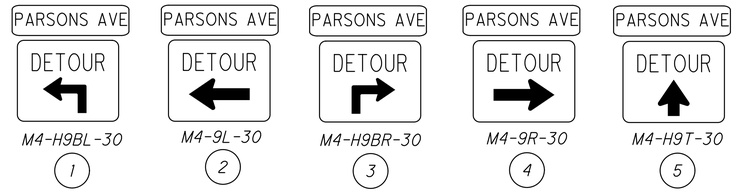

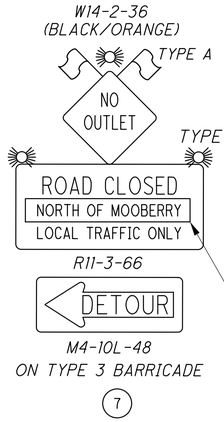

SPECIAL 48" X 48" (BLACK/ORANGE)

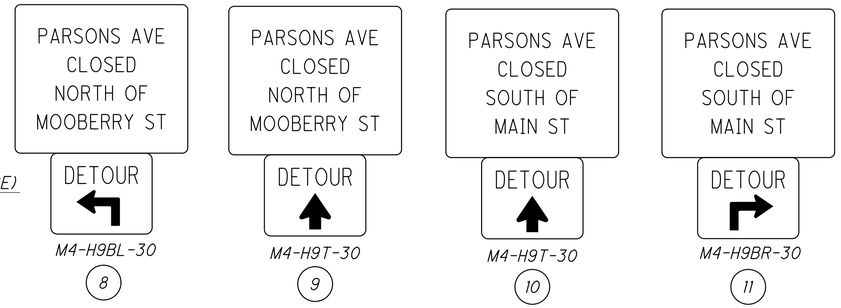

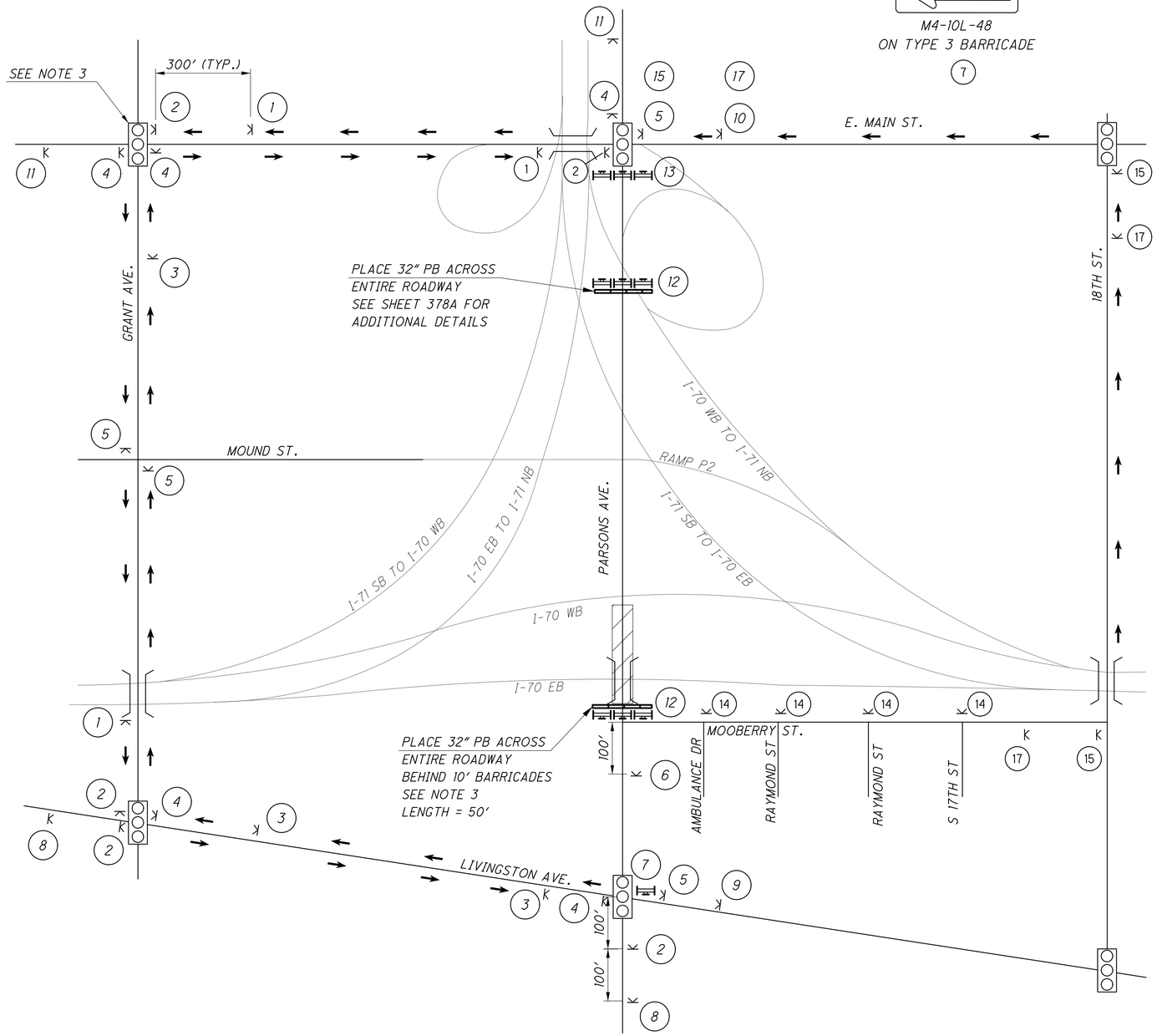

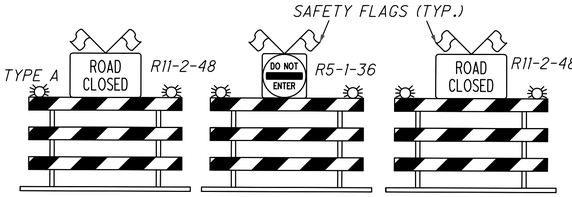

10' TYPE 3 SOLID BARRICADES
(PLACED ACROSS ENTIRE ROADWAY)

12

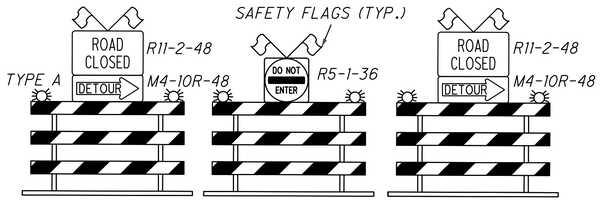

10' TYPE 3 SOLID BARRICADES
(PLACED ACROSS NORTHBOUND LANES)

13

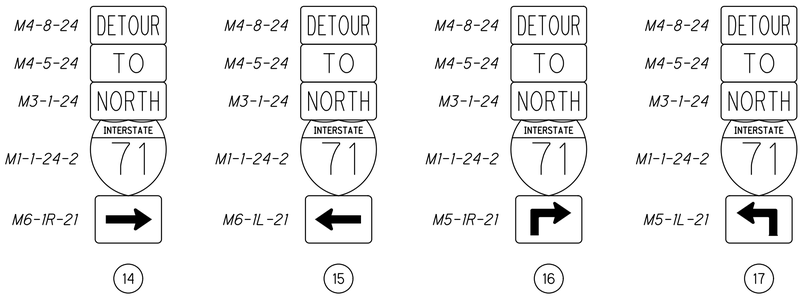

LEGEND

K WORK ZONE SIGN W/ SUPPORT

TYPE 3 BARRICADES W/ SIGN

DETOUR ROUTE

SIGNALIZED INTERSECTION

NOTES:

1. THIS DETOUR SHALL BE IN EFFECT FOR THE CLOSURE AND CONSTRUCTION ON PARSONS AVENUE BETWEEN MOOBERRY STREET AND THE NORTH CONSTRUCTION LIMITS.

2. SEE SHEET 378A FOR I-71 NB DETOUR DETAILS AT MAIN ST. AND PARSONS AVE.

3. SEE SHEET 1393A FOR SIGNAL MODIFICATION DETAILS AT MAIN ST. AND GRANT AVE. PRIOR TO CLOSING PARSONS AVE.

CALCULATED JAH
CHECKED JML

PHASE 2A - PARSONS AVE. CLOSURE

FRA-70-14.54

ms consultants, inc.

PLOT.CEL

ms consultants, inc.
rmsconsultants.com

Ohio DOT Workspace
70\71 East Interchange 2E

www.rmsconsultants.com

0 0.5" 1"

Batchplot Spec: \\rmsconsultants.com\files\Production\03\60\06634_2E\standards\plotdrv\batchplt.spc
Pen Table: \\rmsconsultants.com\files\Standards\ustn\ohdot\V8i\ms\plotting\pen\V8i_ms_std.tbl PDF: ohdot\V8i
Plot Driver: \\rmsconsultants.com\files\Standards\ustn\ohdot\V8i\ms\plotting\PDF_60-06634_2E_Columbus.pltcfg

Model: Sheet View: FENCE_VIEW1
Printed: 9/28/2018 @ 10:19:39 AM By: kryan
File: \\rmsconsultants.com\files\Production\03\60\06634_2E\mot\sheets\105322M020002A.dgn

34" x 22"

PARSONS AVE.

R3-H8bd-30 (POLE MTD.)

ONLY ONLY

TRUCK DETOUR NORTH INTERSTATE 71 ONLY

M4-4-24 M4-8-24

MAIN ST.

ONLY

TRUCK DETOUR NORTH INTERSTATE 71 (POLE MTD.)

M4-4-24 M4-8-24

ALLEN AVE.

MAIN ST.

(SPAN MTD.)

R4-7b-24 KEEP RIGHT

12AM-6AM MON-FRI

COVER OR REMOVE

SEE SHEET 378 FOR SIGN AND BARRICADE DETAILS

M6-1-21

M1-1-24-2 71 INTERSTATE

M3-1-24 NORTH

PARSONS AVE.

ONLY ONLY

SEE SHEET 378 FOR SIGN AND BARRICADE DETAILS

32" PORTABLE BARRIER PLACED ACROSS ENTIRE ROADWAY (50') (SEE NOTE 4)

RAMP TO I-71 NB

NOTES:

1. SEE SHEET 378 FOR ADDITIONAL DETOUR SIGNING.

2. THIS DETOUR SHALL BE IN EFFECT FOR THE CLOSURE OF PARSONS AVENUE FROM MOOBERRY ST TO THE NORTH LIMIT OF CONSTRUCTION.

3. SEE SHEET 379 FOR PEDESTRIAN DETOUR DETAILS.

4. IN ADDITION TO THE PORTABLE BARRIER, THE CONTRACTOR SHALL PLACE 6' CHAIN LINK FENCING WITH GATES COMPLETELY ACROSS THE ROADWAY AND SIDEWALK TO PREVENT PEDESTRIANS FROM TRAVELING PAST THE CLOSURE POINT.

HORIZONTAL SCALE IN FEET
0 10 20 40

CALCULATED
CHECKED

MAINTENANCE OF TRAFFIC - PHASE 2A
PARSONS AVE. CLOSURE I-71 NB DETOUR

FRA-70-14.54

378A
2317

PLOT.CEL

ms consultants, inc.
msconsultants.com

www.msconsultants.com

Ohio DOT Workspace
70\71 East Interchange 2E

0 0.5" 1"

Batchplot Spec: \\msconsultants.com\files\production\03\60\06634.2E\standards\plotdr\batchplt.spc
Pen Table: \\msconsultants.com\files\Standards\usitn\ohdot\V8i\ms\plotting\pen\V8i_ms_std.tbl
Plot Driver: \\msconsultants.com\files\Standards\usitn\ohdot\V8i\ms\plotting\PDF.pltcfg
PDF: ohdotV8i
PCF: 60-06634_2E_Columbus

Model: Sheet
Printed: 9/28/2018 @ 10:19:40 AM
File: N:\03\60\06634.2E\mot\sheets\105327M02002.dgn
View: FENCE_VIEW1
By: kryan

34" x 22"

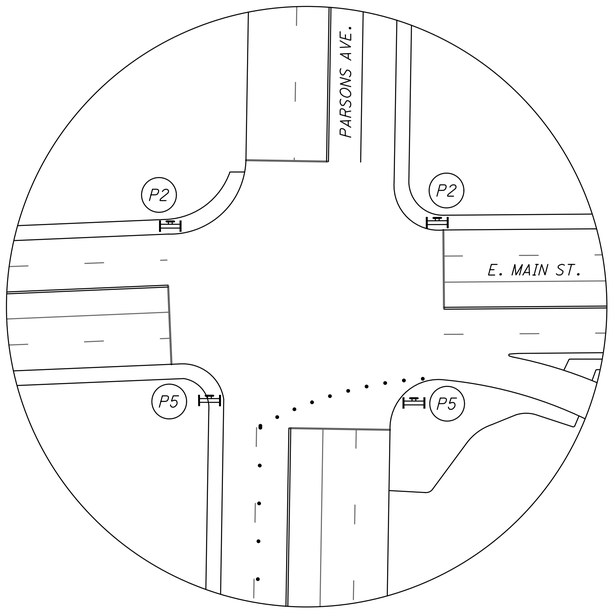

INTERSECTION DETAIL 'A'

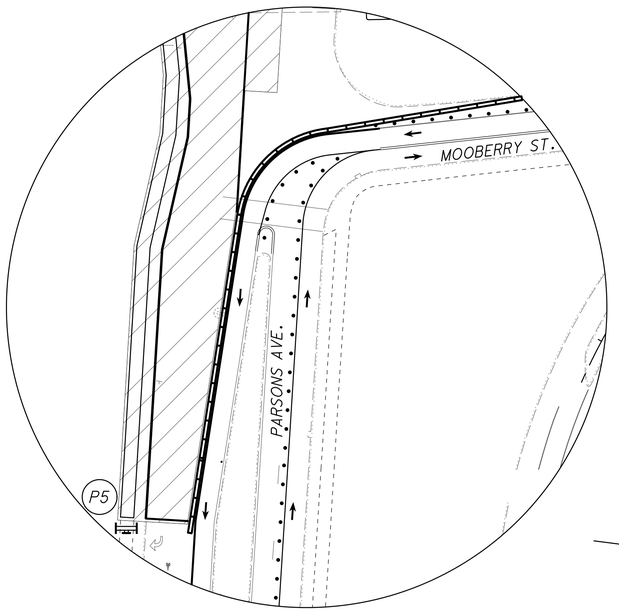

INTERSECTION DETAIL 'B'

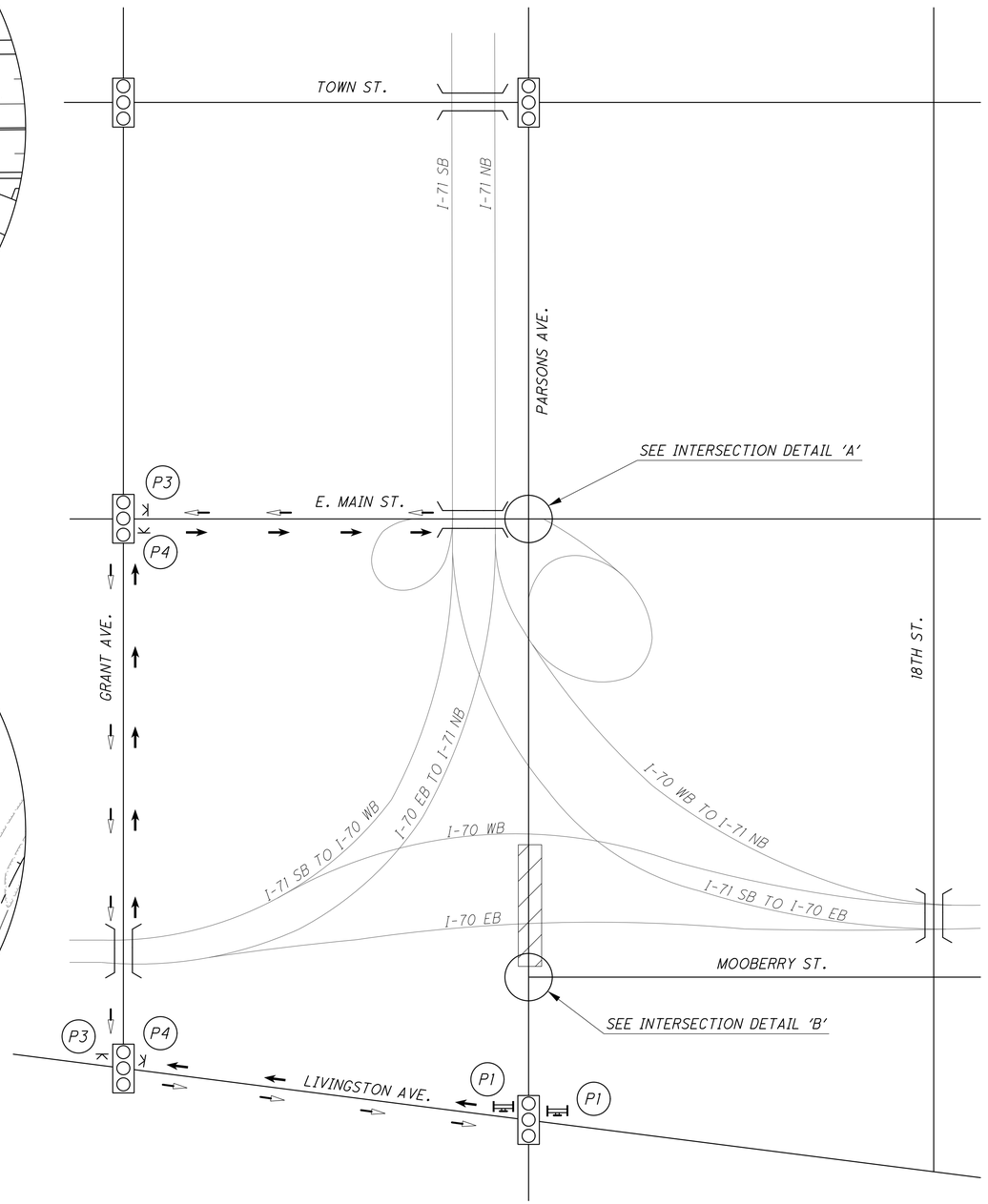

R9-9-30
SIDEWALK CLOSED
DETOUR
M4-9BL-30
P1

R9-9-30
SIDEWALK CLOSED
DETOUR
M4-9BR-30
P2

D3-1 36" X 9" (BLACK/ORANGE)

PARSONS AVE
DETOUR
M4-9BL-30
P3

PARSONS AVE
DETOUR
M4-9BR-30
P4

R9-9-30
SIDEWALK CLOSED
P5

NOTES

1. THIS PEDESTRIAN DETOUR SHALL BE IN EFFECT FOR THE CLOSURE OF SOUTH PARSONS AVENUE.

2. THE PEDESTRIAN DETOUR FOR PARSONS AVENUE SHALL OCCUR IN CONJUNCTION WITH THE VEHICULAR DETOURS FOR THE PARSONS AVENUE CLOSURE.

LEGEND

- K WORK ZONE SIGN W/ SUPPORT
- 6' TYPE 3 BARRICADES W/ SIGN
- PEDESTRIAN DETOUR ROUTE (NORTH PARSONS)
- PEDESTRIAN DETOUR ROUTE (SOUTH PARSONS)
- SIGNALIZED INTERSECTION

CALCULATED JAH
CHECKED JML

PHASE 2A - PARSONS AVE. CLOSURE PEDESTRIAN DETOUR

FRA-70-14.54

379
2317

PLOT.CEL
ms consultants, inc.
msconsultants.com
www.msconsultants.com
Ohio DOT Workspace
70\71 East Interchange 2E
0 0.5" 1"
Batchplot Spec: \\msconsultants.com\files\production\03\60\06634_2E\standards\plotdrv\batchplt.spc
Pen Table: \\msconsultants.com\files\Standards\ustn\ohdot\V8i\ms\plotting\pen\V8i_ms_std.tbl
Plot Driver: \\msconsultants.com\files\Standards\ustn\ohdot\v8i\ms\plotting\PDF.pltcfg
PDF: ohdot\V8i
PCF: 60-06634_2E_Columbus
34" x 22"
View FENCE_VIEW1
By: kryan
Model: Sheet
Printed: 9/28/2018 @ 10:19:42 AM
File: N:\03\60\06634_2E\mot\sheets\105322M02003.dgn

MESSAGES FOR PORTABLE CHANGEABLE MESSAGE SIGNS

(2 SEC)	(2 SEC)	(2 SEC)	(2 SEC)	(2 SEC)	(2 SEC)
EXIT TO 18TH ST CLOSES	8PM FRI TO 5AM MON	CHILDRNS HOSPITAL TRAFFIC	EXIT 4TH ST LVNGSTON	18TH ST EXIT CLOSED	USE 4TH ST EXIT
1		2		3	

D9-H2A(MOD)-48
H CHILDRENS HOSPITAL
18TH ST
DETOUR
D3-1 48" X 12" (BLACK/ORANGE)
M4-H9T-30 (DUAL)
4

D3-1 48" X 12" (BLACK/ORANGE)
18TH ST
DETOUR
M4-H9T-30
5

D9-H2A(MOD)-48
H CHILDRENS HOSPITAL
DETOUR
M4-9L-30
6

DETOUR TO EAST INTERSTATE 70
M4-8-24
M4-5-24
M3-2-24
M1-1-36-2
M6-3-21
7

DETOUR TO EAST INTERSTATE 70
M4-8-24
M4-5-24
M3-2-24
M1-1-36-2
M6-1-21
8

DETOUR TO EAST INTERSTATE 70
M4-8-24
M4-5-24
M3-2-24
M1-1-36-2
M5-1-21
9

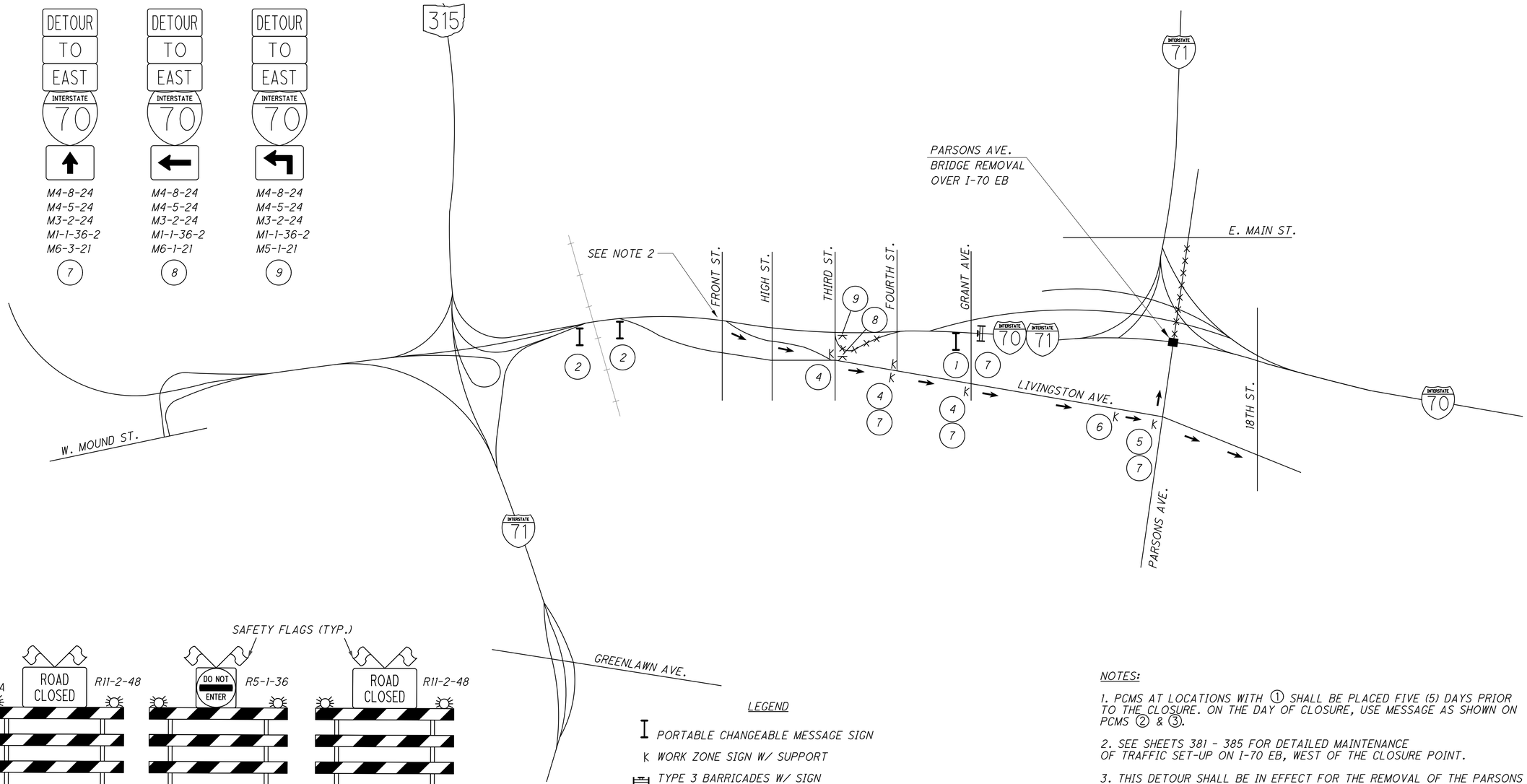

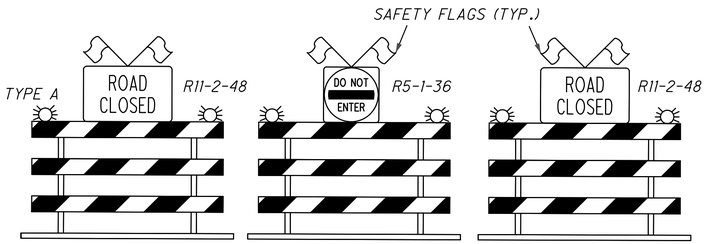

10' TYPE 3 SOLID BARRICADES
(PLACED ACROSS ENTIRE ROADWAY)
7

LEGEND
- I PORTABLE CHANGEABLE MESSAGE SIGN
- K WORK ZONE SIGN W/ SUPPORT
- TYPE 3 BARRICADES W/ SIGN
- DETOUR ROUTE
- ROADWAY CLOSED
- RAILROAD

NOTES:

1. PCMS AT LOCATIONS WITH (1) SHALL BE PLACED FIVE (5) DAYS PRIOR TO THE CLOSURE. ON THE DAY OF CLOSURE, USE MESSAGE AS SHOWN ON PCMS (2) & (3).

2. SEE SHEETS 381 - 385 FOR DETAILED MAINTENANCE OF TRAFFIC SET-UP ON I-70 EB, WEST OF THE CLOSURE POINT.

3. THIS DETOUR SHALL BE IN EFFECT FOR THE REMOVAL OF THE PARSONS AVENUE BRIDGE OVER THE EXISTING I-70 EB ROADWAY AND SHALL ONLY BE PERMITTED ON A SINGLE WEEKEND FROM 8:00 P.M. FRIDAY TO 5:00 A.M. MONDAY.

CALCULATED JAH
CHECKED JML

18TH ST. DETOUR (PARSONS AVE. BRIDGE REMOVAL)

FRA-70-14.54

ms consultants, inc.

PLOT.CEL

ms consultants, inc.
msconsultants.com

Ohio DOT Workspace
70\71 East Interchange 2E
www.msconsultants.com

0 1" 0.5"

Batchplot Spec: \\msconsultants.com\files\production\03\60\06634_2E\standards\plotdrv\batchplt.spc
Pen Table: \\msconsultants.com\files\Standards\ustn\ohdot\V8i\ms\plotting\pen\V8i_ms_std.tbl
Plot Driver: \\msconsultants.com\files\Standards\ustn\ohdot\v8i\ms\plotting\PDF.pltcfg
PDF: ohdot\V8i
PCF: 60-06634_2E_Columbus

3.4" x 22"

Model: Sheet
Printed: 9/28/2018 @ 10:19:45 AM
File: N:\03\60\06634_2E\mot\sheets\05322MP2060.dgn
View: FENCE_VIEW1
By: kryan

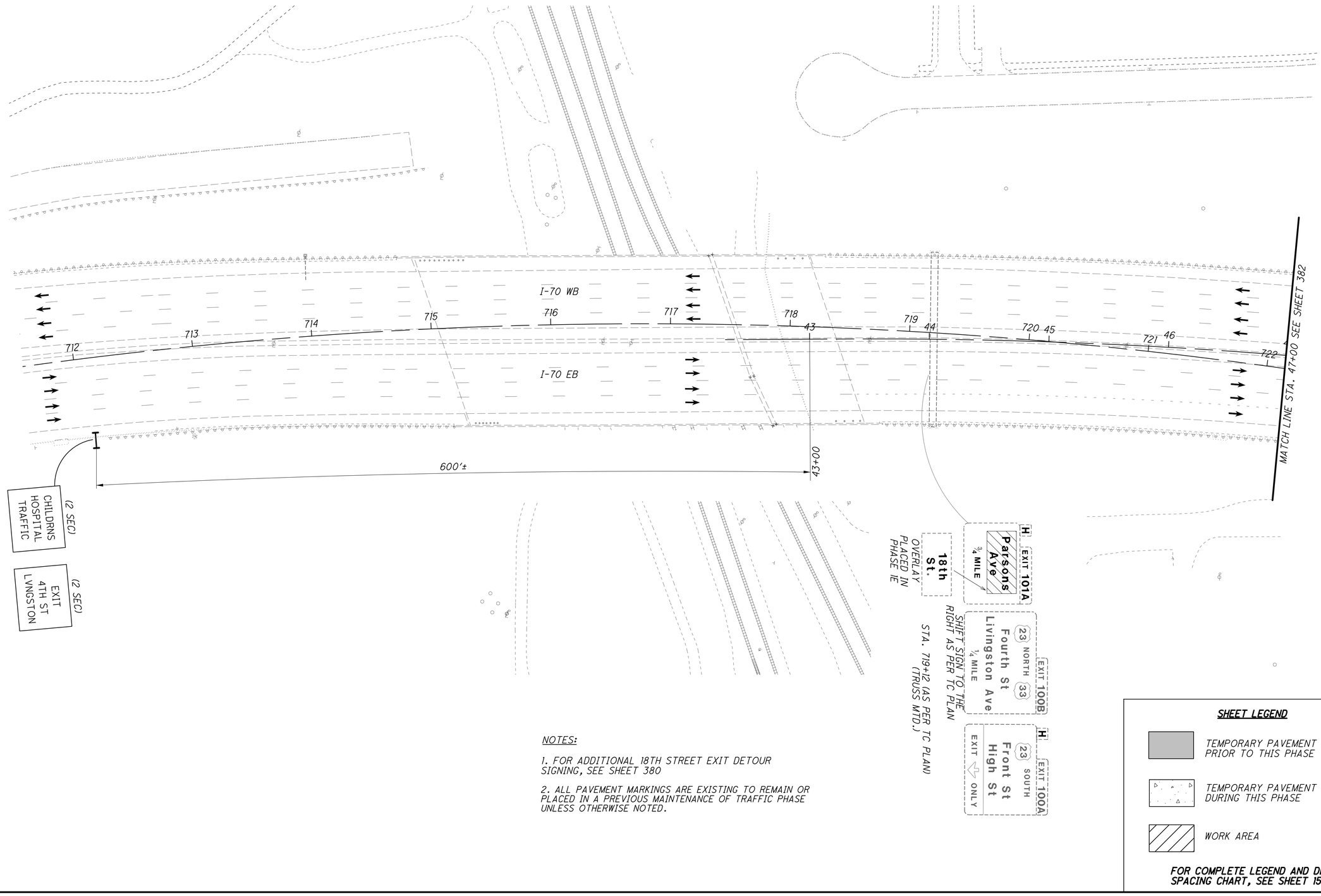

NOTES:

1. FOR ADDITIONAL 18TH STREET EXIT DETOUR SIGNING, SEE SHEET 380

2. ALL PAVEMENT MARKINGS ARE EXISTING TO REMAIN OR PLACED IN A PREVIOUS MAINTENANCE OF TRAFFIC PHASE UNLESS OTHERWISE NOTED.

SHEET LEGEND

- TEMPORARY PAVEMENT PLACED PRIOR TO THIS PHASE
- TEMPORARY PAVEMENT PLACED DURING THIS PHASE
- WORK AREA

FOR COMPLETE LEGEND AND DRUM SPACING CHART, SEE SHEET 156

N

0 20 40 80
HORIZONTAL SCALE IN FEET

CALCULATED JAH
CHECKED JML

MAINTENANCE OF TRAFFIC - PHASE 2B
I-70 EB CLOSURE - PARSONS BRIDGE REMOVAL

FRA-70-14.54

381
2317

PLOT.CEL

ms consultants, inc.
msconsultants.com

www.msconsultants.com

Ohio DOT Workspace
70\71 East Interchange 2E

1"
0.5"
0

Batchplot Spec: \\msconsultants.com\Files\Production\03\60\06634_2E\standards\plotdrv\batchplt.spc
Pen Table: \\msconsultants.com\Files\Standards\usth\ohdot\V8i\ms\plotting\pen\V8i_ms_std.tbl
Plot Driver: \\msconsultants.com\Files\Standards\usth\ohdot\v8i\ms\plotting\PDF.pltcfg

PDF: ohdotV8i
PCF: 60-06634_2E_Columbus

Model: Sheet
Printed: 9/26/2018 @ 10:19:48 AM
File: N:\03\60\06634_2E\mot\sheets\105322MP2061.dgn

View: FENCE_VIEW1
By: kryan

34" x 22"

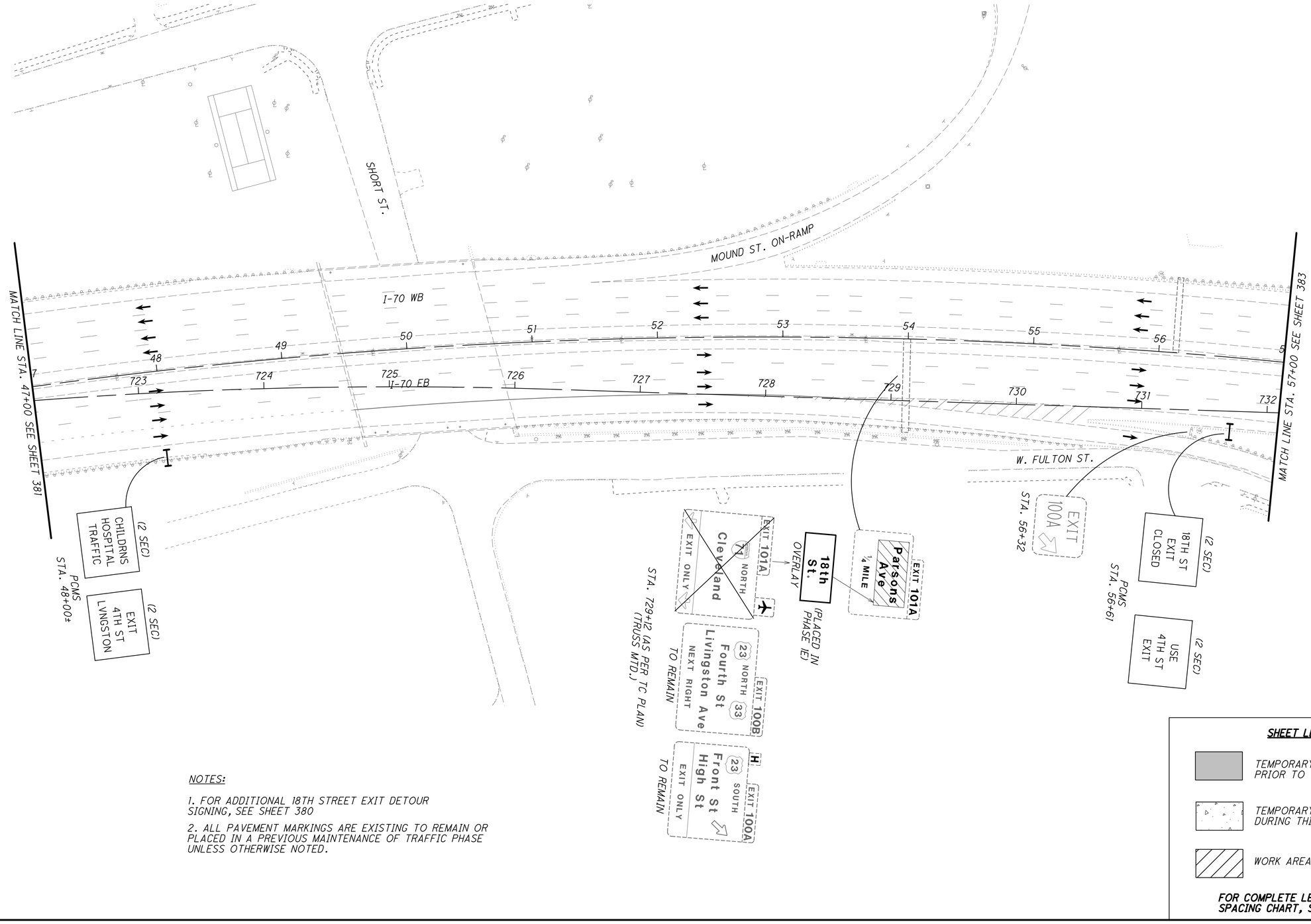

NOTES:

1. FOR ADDITIONAL 18TH STREET EXIT DETOUR SIGNING, SEE SHEET 380

2. ALL PAVEMENT MARKINGS ARE EXISTING TO REMAIN OR PLACED IN A PREVIOUS MAINTENANCE OF TRAFFIC PHASE UNLESS OTHERWISE NOTED.

SHEET LEGEND

- TEMPORARY PAVEMENT PLACED PRIOR TO THIS PHASE
- TEMPORARY PAVEMENT PLACED DURING THIS PHASE
- WORK AREA

FOR COMPLETE LEGEND AND DRUM SPACING CHART, SEE SHEET 156

HORIZONTAL SCALE IN FEET
0 20 40 80

CALCULATED JAH
CHECKED JML

MAINTENANCE OF TRAFFIC - PHASE 2B
I-70 EB CLOSURE - PARSONS BRIDGE REMOVAL

FRA-70-14.54

382
2317

ms consultants, inc.

34" x 22"
Model: Sheet View: FENCE_VIEW1
Printed: 9/28/2018 @ 10:19:50 AM By: kryan
File: N:\03\60\06634_2E\mot\sheets\105322MP2062.dgn
Batchplot Spec: \\msconsultants.com\files\production\03\60\06634_2E\standards\plotdrv\batchplt.spc
Pen Table: \\msconsultants.com\files\Standards\ustn\ohdot\V8i\ms\plotting\pen\V8i_ms_std.tbl
Plot Driver: \\msconsultants.com\files\Standards\ustn\ohdot\v8i\ms\plotting\PDF.pltcfg
PCF: ohdotV8i
PCF: 60-06634_2E_Columbus
Ohio DOT Workspace
70\71 East Interchange 2E
ms consultants, inc.
msconsultants.com
PLOT.CEL
www.msconsultants.com

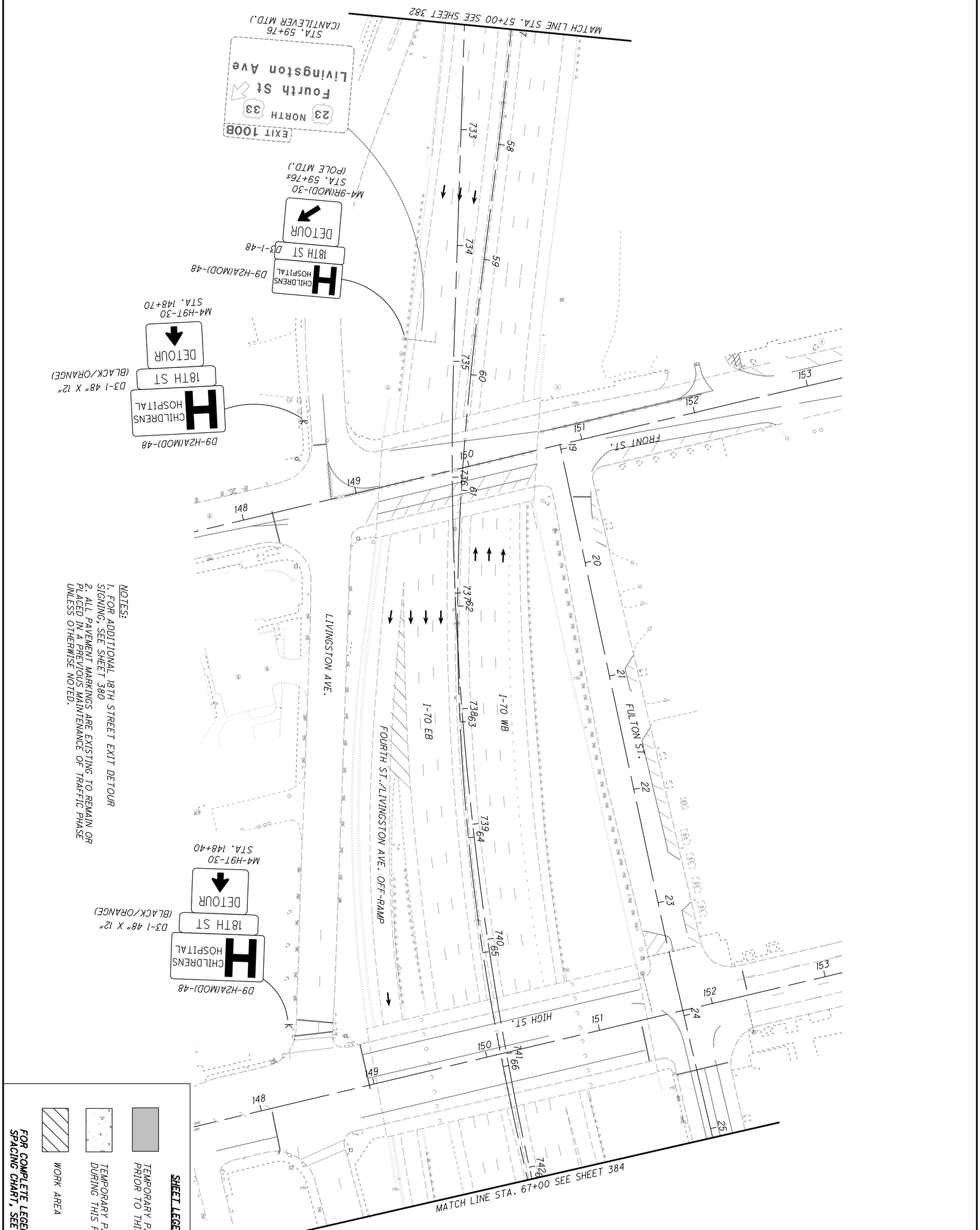

NOTES:
1. FOR ADDITIONAL 18TH STREET EXIT DETOUR SIGNING, SEE SHEET 380
2. ALL PAVEMENT MARKINGS ARE EXISTING TO REMAIN OR PLACED IN A PREVIOUS MAINTENANCE OF TRAFFIC PHASE UNLESS OTHERWISE NOTED.

SHEET LEGEND

- TEMPORARY PAVEMENT PLACED PRIOR TO THIS PHASE
- TEMPORARY PAVEMENT PLACED DURING THIS PHASE
- WORK AREA

FOR COMPLETE LEGEND AND DRUM SPACING CHART, SEE SHEET 156

383
2317

FRA-70-14.54

MAINTENANCE OF TRAFFIC - PHASE 2B
I-70 EB CLOSURE - PARSONS BRIDGE REMOVAL

CALCULATED JAH
CHECKED JML

0 20 40 80
HORIZONTAL SCALE IN FEET

ms consultants, inc.

34" x 22"
Model: Sheet View: FENCE_VIEW1
Printed: 9/28/2018 @ 10:19:53 AM By: kryan
File: N:\03\60\06634_2E\mot\sheets\105322MP2063.dgn
Batchplot Spec: \\msconsultants.com\files\production\03\60\06634_2E\standards\plotdrv\batchplt.spc
Pen Table: \\msconsultants.com\files\Standards\ustn\ohdot\V8i\ms\plotting\pen\V8i_ms_std.tbl
Plot Driver: \\msconsultants.com\files\Standards\ustn\ohdot\v8i\ms\plotting\PDF.pltcfg
PCF: ohdotV8i
PCF: 60-06634_2E_Columbus
Ohio DOT Workspace
70\71 East Interchange 2E
www.msconsultants.com
ms consultants, inc.
msconsultants.com
PLOT.CEL

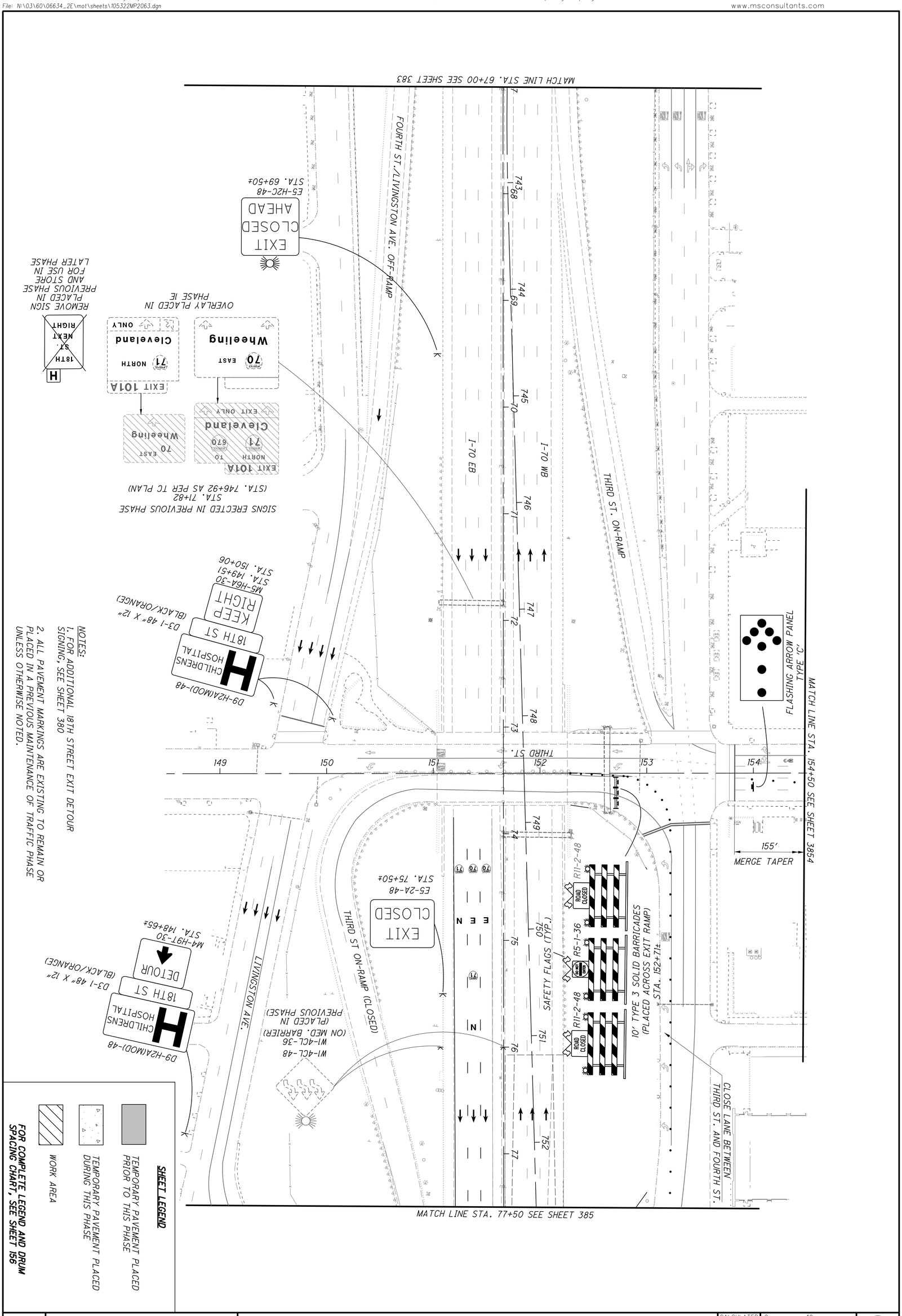

NOTES:
1. FOR ADDITIONAL 18TH STREET EXIT DETOUR SIGNING, SEE SHEET 380
2. ALL PAVEMENT MARKINGS ARE EXISTING TO REMAIN OR PLACED IN A PREVIOUS MAINTENANCE OF TRAFFIC PHASE UNLESS OTHERWISE NOTED.

384 / 2317	FRA-70-14.54	MAINTENANCE OF TRAFFIC - PHASE 2B I-70 EB CLOSURE - PARSONS BRIDGE REMOVAL	CALCULATED JAH CHECKED JML	0 20 40 80 HORIZONTAL SCALE IN FEET

34" x 22"
Model: Sheet
Printed: 9/28/2018 @ 10:19:57 AM
File: N:\03\60\06634_2E\mot\sheets\105322MP2064.dgn
View: FENCE_VIEW1
By: kryan
Batchplot Spec: \\msconsultants.com\files\production\03\60\06634_2E\standards\plotdrv\batchplt.spc
Pen Table: \\msconsultants.com\files\Standards\ustn\ohdot\V8i\ms\plotting\pen\V8i_ms_std.tbl
Plot Driver: \\msconsultants.com\files\Standards\ustn\ohdot\v8i\ms\plotting\PDF.pltcfg
PCF: ohdotV8i
PCF: 60-06634_2E_Columbus
Ohio DOT Workspace
70\71 East Interchange 2E
ms consultants, inc.
msconsultants.com
PLOT.CEL
www.msconsultants.com

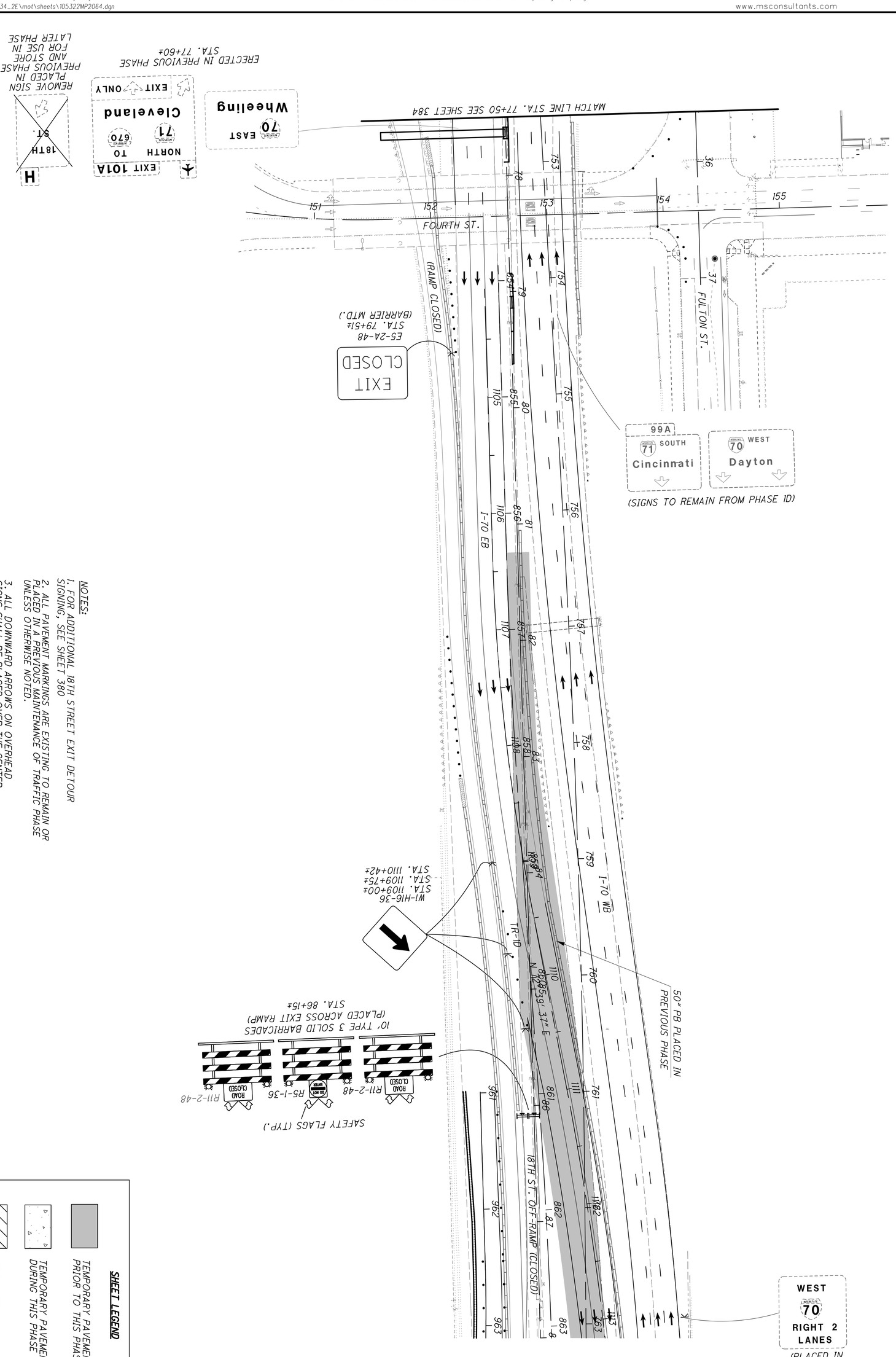

NOTES:

1. FOR ADDITIONAL 18TH STREET EXIT DETOUR SIGNING, SEE SHEET 380
2. ALL PAVEMENT MARKINGS ARE EXISTING TO REMAIN OR PLACED IN A PREVIOUS MAINTENANCE OF TRAFFIC PHASE UNLESS OTHERWISE NOTED.
3. ALL DOWNWARD ARROWS ON OVERHEAD SIGNS SHALL BE PLACED OVER THE CENTER OF TRAVEL LANE.

SHEET LEGEND

- TEMPORARY PAVEMENT PLACED PRIOR TO THIS PHASE
- TEMPORARY PAVEMENT PLACED DURING THIS PHASE
- WORK AREA

FOR COMPLETE LEGEND AND DRUM SPACING CHART, SEE SHEET 156

385 / 2317	FRA-70-14.54	MAINTENANCE OF TRAFFIC - PHASE 2B I-70 EB CLOSURE - PARSONS BRIDGE REMOVAL	CALCULATED JAH CHECKED JML	0 20 40 80 HORIZONTAL SCALE IN FEET	N

ms consultants, inc.

PLOT.CEL

ms consultants, inc.
msconsultants.com

www.msconsultants.com

Ohio DOT Workspace
70\71 East Interchange 2E

0 0.5" 1"

Batchplot Spec: \\msconsultants.com\files\production\03\60\06634_2E\standards\plotdrv\batchplt.spc
Pen Table: \\msconsultants.com\files\Standards\ustn\ohdot\V8i\ms\plotting\pen\V8i_ms_std.tbl
Plot Driver: \\msconsultants.com\files\Standards\ustn\ohdot\v8i\ms\plotting\PDF.pltcfg

PDF: ohdot\V8i
PCF: 60-06634_2E_Columbus

Model: Sheet
Printed: 9/28/2018 @ 10:20:07 AM
File: N:\03\60\06634_2E\mot\sheets\105322MP109.dgn

View: FENCE_VIEW1
By: kryan

34" x 22"

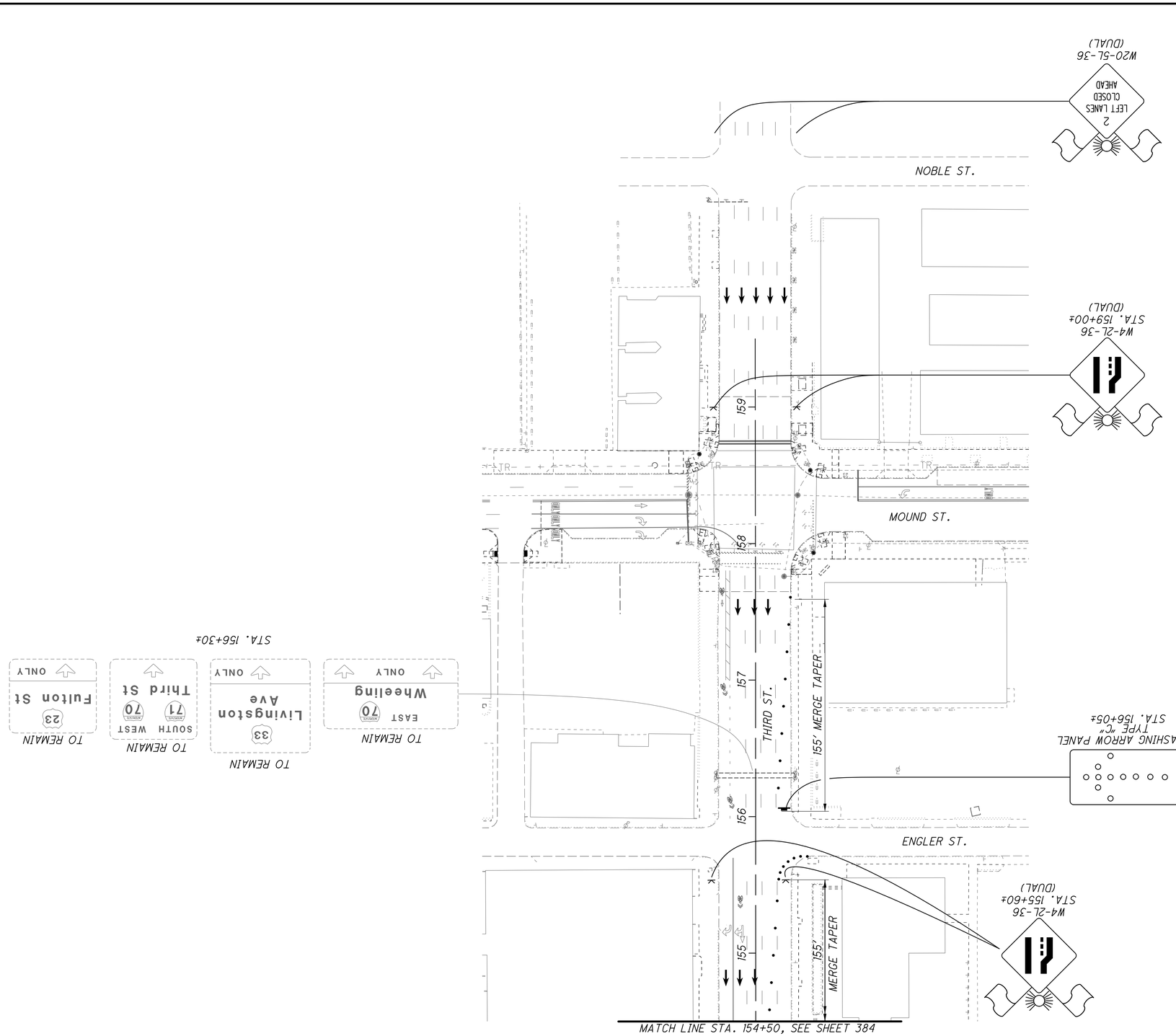

SHEET LEGEND

- TEMPORARY PAVEMENT PLACED PRIOR TO THIS PHASE
- TEMPORARY PAVEMENT PLACED DURING THIS PHASE
- WORK AREA

FOR COMPLETE LEGEND AND DRUM SPACING CHART, SEE SHEET 156

0 20 40 80
HORIZONTAL SCALE IN FEET

CALCULATED JAH
CHECKED JML

MAINTENANCE OF TRAFFIC - PHASE 2B
I-70 EB CLOSURE - PARSONS BRIDGE REMOVAL

FRA-70-14.54

385A
2317

34" x 22"
0 0.5" 1"
Batchplot Spec: \\msconsultants.com\files\production\03\60\06634_2E\standards\plotdrv\batchplt.spc
Pen Table: \\msconsultants.com\files\Standards\ustn\ohdot\V8i\ms\plotting\pen\V8i_ms_std.tbl
Plot Driver: \\msconsultants.com\files\Standards\ustn\ohdot\v8i\ms\plotting\PDF.pltcfg
PCF: ohdotV8i
PCF: 60-06634_2E_Columbus
Ohio DOT Workspace
70\71 East Interchange 2E
Model: Sheet
Printed: 9/28/2018 @ 10:20:11 AM
File: N:\03\60\06634_2E\mot\sheets\105322MP2023.dgn
View: FENCE_VIEW1
By: kryan
ms consultants, inc.
msconsultants.com
PLOT.CEL
www.msconsultants.com

SHEET LEGEND

- TEMPORARY PAVEMENT PLACED PRIOR TO THIS PHASE
- TEMPORARY PAVEMENT PLACED DURING THIS PHASE
- WORK AREA

FOR COMPLETE LEGEND AND DRUM SPACING CHART, SEE SHEET 156

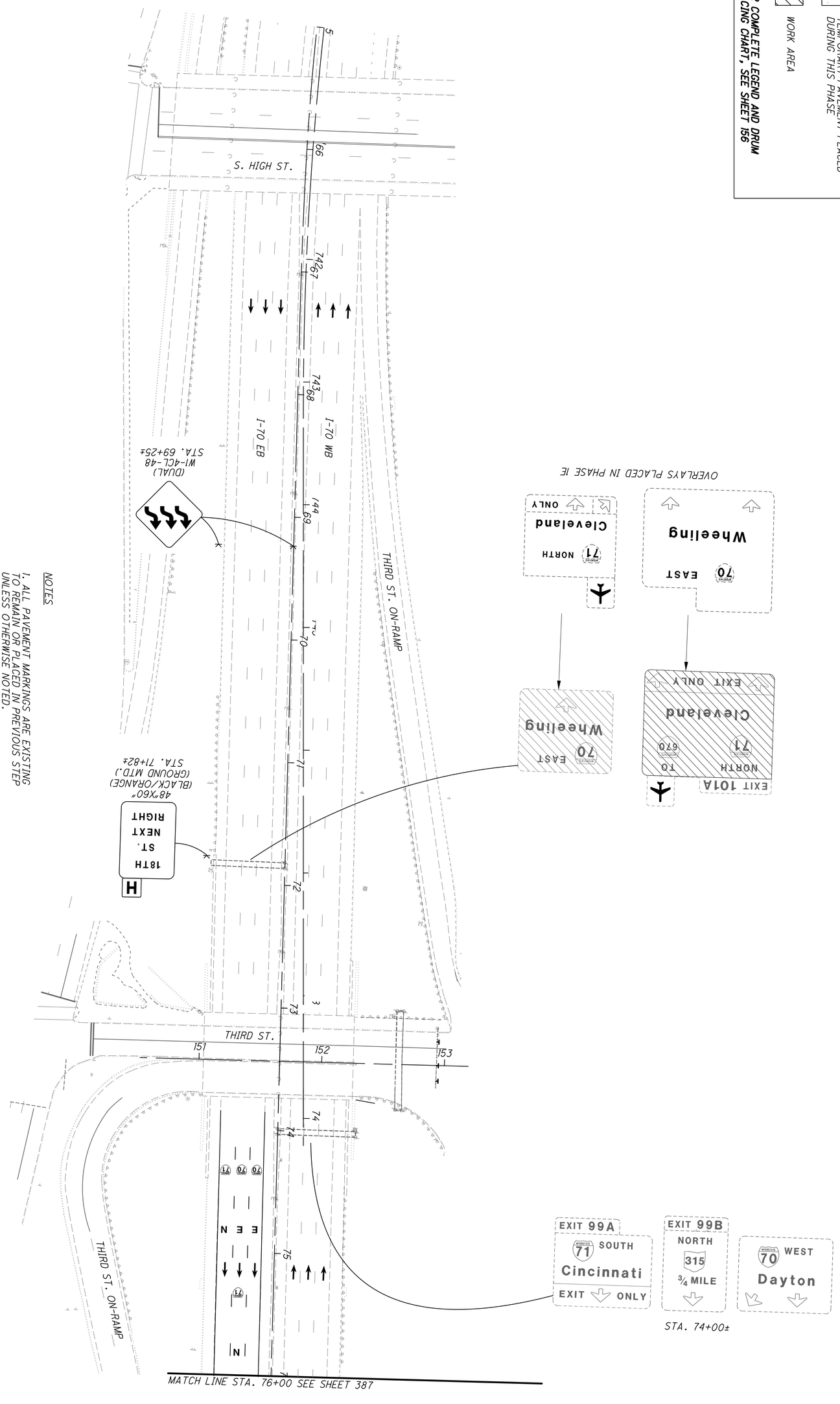

NOTES

1. ALL PAVEMENT MARKINGS ARE EXISTING TO REMAIN OR PLACED IN PREVIOUS STEP UNLESS OTHERWISE NOTED.
2. ALL DOWNWARD ARROWS ON OVERHEAD SIGNS SHALL BE PLACED OVER THE CENTER OF THEIR RESPECTIVE TRAVEL LANE.

386 / 2317	FRA-70-14.54	MAINTENANCE OF TRAFFIC - PHASE 2B TR-2F	CALCULATED JAH CHECKED JML	0 20 40 80 HORIZONTAL SCALE IN FEET

ms consultants, inc.

34" x 22"

Model: Sheet
Printed: 9/28/2018 @ 10:20:17 AM
File: N:\03\60\06634_2E\mot\sheets\105322MP2024.dgn
View: FENCE_VIEW1
By: kryan

Batchplot Spec: \\msconsultants.com\files\production\03\60\06634_2E\standards\plotdrv\batchplt.spc
Pen Table: \\msconsultants.com\files\Standards\ustn\ohdot\V8i\ms\plotting\pen\V8i_ms_std.tbl
Plot Driver: \\msconsultants.com\files\Standards\ustn\ohdot\v8i\ms\plotting\PDF.pltcfg
PCF: ohdotV8i
PCF: 60-06634_2E_Columbus

0 1"
0.5"

Ohio DOT Workspace
70\71 East Interchange 2E

ms consultants, inc.
msconsultants.com
PLOT.CEL

www.msconsultants.com

SIGNS ERECTED IN PREVIOUS PHASE
STA. 77+60±

EXIT 101A
NORTH TO 71 670
Cleveland
EXIT ONLY

EAST 70
Wheeling

MATCH LINE STA. 76+00 SEE SHEET 386

THIRD ST. ON-RAMP

48"X60" (BLACK/ORANGE) (GROUND MTD.) (PLACED IN PREVIOUS STEP)

18TH ST.

FOURTH ST.

151 152 153 78 3

EXIT 99A
71 SOUTH Cincinnati
70 WEST Dayton
(SIGNS TO REMAIN FROM PHASE 1D)

(OVERLAY)
71 NORTH
70 EAST
(GROUND MTD. ON MEDIAN SIDE)
(PLACED IN PHASE 1)

I-70 WB

50" PB PLACED IN PREVIOUS PHASE

TR-1D

N 72° 39' 37" E

W1-H16-36 (PLACED IN PREVIOUS PHASE)

RAMP N1

MATCH LINE STA. 862+00 SEE SHEET 388

NOTES:

1. ALL PAVEMENT MARKINGS ARE EXISTING TO REMAIN OR PLACED IN A PREVIOUS MAINTENANCE OF TRAFFIC PHASE UNLESS OTHERWISE NOTED.
2. ALL DOWNWARD ARROWS ON OVERHEAD SIGNS SHALL BE PLACED OVER THE CENTER OF TRAVEL LANE.

SHEET LEGEND

- TEMPORARY PAVEMENT PLACED PRIOR TO THIS PHASE
- TEMPORARY PAVEMENT PLACED DURING THIS PHASE
- WORK AREA

FOR COMPLETE LEGEND AND DRUM SPACING CHART, SEE SHEET 156

34" x 22"
Model: Sheet View: FENCE_VIEW1
Printed: 9/28/2018 @ 10:20:55 AM By: kryan
File: N:\03\60\06634_2E\mot\sheets\105322MP2025.dgn
Batchplot Spec: \\msconsultants.com\files\production\03\60\06634_2E\standards\plotdrv\batchplt.spf
Pen Table: \\msconsultants.com\files\Standards\ustn\ohdot\V8i\ms\plotting\pen\V8i_ms_std.tbl
Plot Driver: \\msconsultants.com\files\Standards\ustn\ohdot\v8i\ms\plotting\PDF.pltcfg
PCF: ohdotV8i
PCF: 60-06634_2E_Columbus
Ohio DOT Workspace
70\71 East Interchange 2E
ms consultants, inc.
msconsultants.com
PLOT.CEL
www.msconsultants.com

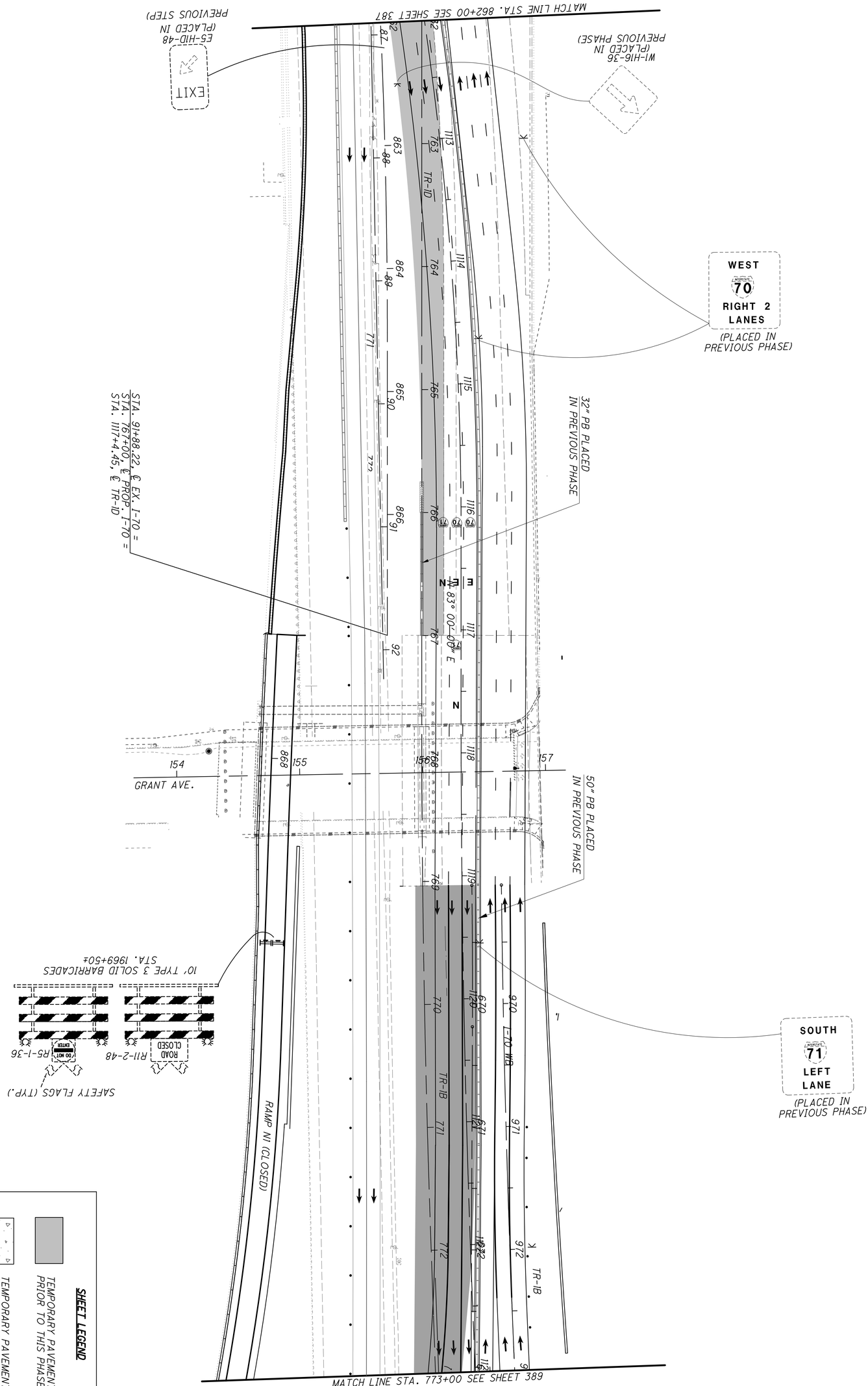

NOTES:

1. ALL PAVEMENT MARKINGS ARE EXISTING TO REMAIN OR PLACED IN A PREVIOUS MAINTENANCE OF TRAFFIC PHASE UNLESS OTHERWISE NOTED.

SHEET LEGEND

- TEMPORARY PAVEMENT PLACED PRIOR TO THIS PHASE
- TEMPORARY PAVEMENT PLACED DURING THIS PHASE
- WORK AREA

FOR COMPLETE LEGEND AND DRUM SPACING CHART, SEE SHEET 156

388
2317

FRA-70-14.54

MAINTENANCE OF TRAFFIC - PHASE 2B
TR-2F

CALCULATED JAH
CHECKED JML

HORIZONTAL SCALE IN FEET
0 20 40 80

ms consultants, inc.

PLOT.CEL

ms consultants, inc.
msconsultants.com

Batchplot Spec: \\msconsultants.com\Files\Production\03\60\06634_2E\standards\plotdrv\batchplt.spc
Pen Table: \\msconsultants.com\Files\Standards\ustn\ohdot\V8i\ms\plotting\pen\V8i_ms_std.tbl
Plot Driver: \\msconsultants.com\Files\Standards\ustn\ohdot\V8i\ms\plotting\PDF.pltcfg

Ohio DOT Workspace
70\71 East Interchange 2E
www.msconsultants.com

PDF: ohdotV8i
DGN: 60-06634_2E_Columbus

1" / 0.5" / 0

34" x 22"

Model: Sheet
Printed: 9/28/2018 @ 10:20:59 AM
File: N:\03\60\06634_2E\mot\sheets\105220MP2026.dgn
View: FENCE_VIEW1
By: kryan

NOTE

1. ALL PAVEMENT MARKINGS ARE EXISTING TO REMAIN OR PLACED IN PREVIOUS STEP UNLESS OTHERWISE NOTED.

70 EAST
71 NORTH
(PLACED IN PHASE 1F)
STA. 776+75

W4-3L-48
(PLACED IN PREVIOUS PHASE)

EXIT 108B
40
Broad St
1/4 MILE
PLACED IN PREVIOUS PHASE

32" PB PLACED IN PREVIOUS PHASE

50" PB PLACED IN PREVIOUS PHASE

I-70 WB

I-70 EB

FULTON ST.

MATCH LINE STA. 773+00 SEE SHEET 388

N 81° 22' 08" E

N 65° 00' 41" E

32" PB PLACED IN PREVIOUS PHASE

TR-1B

TR-2D

(ROADWAY CLOSED)

BEGIN TEMP. PVMT.
STA. 1460+50

N 84° 36' 13" E

TR-2F

I-70 EB / 18TH ST. EXIT

MATCH LINE STA. 784+50 SEE SHEET 390

YE

WE

BEGIN YE
MEET EXISTING PAVEMENT MARKINGS
STA. 773+91

W.Z. ATTENUATOR

BEGIN WE
MEET EXISTING PAVEMENT MARKINGS
STA. 1457+11

1457+29

300' PB FLARE (12:1)

1460+29

BEGIN 32" PB
MEET EX. PB
STA. 1459+48

10' TYPE 3 SOLID BARRICADES (PLACED IN PREVIOUS PHASE)

ROAD CLOSED
R11-2-48

DO NOT ENTER
R5-1-36

SAFETY FLAGS (TYP.)

RAMP N1 (CLOSED)

RAMP N1 (CLOSED)

SHEET LEGEND

- TEMPORARY PAVEMENT PLACED PRIOR TO THIS PHASE
- TEMPORARY PAVEMENT PLACED DURING THIS PHASE
- WORK AREA

FOR COMPLETE LEGEND AND DRUM SPACING CHART, SEE SHEET 156

HORIZONTAL SCALE IN FEET
0 20 40 80

CALCULATED JAH
CHECKED JML

MAINTENANCE OF TRAFFIC - PHASE 2B
TR-2F

FRA-70-14.54

389
2317

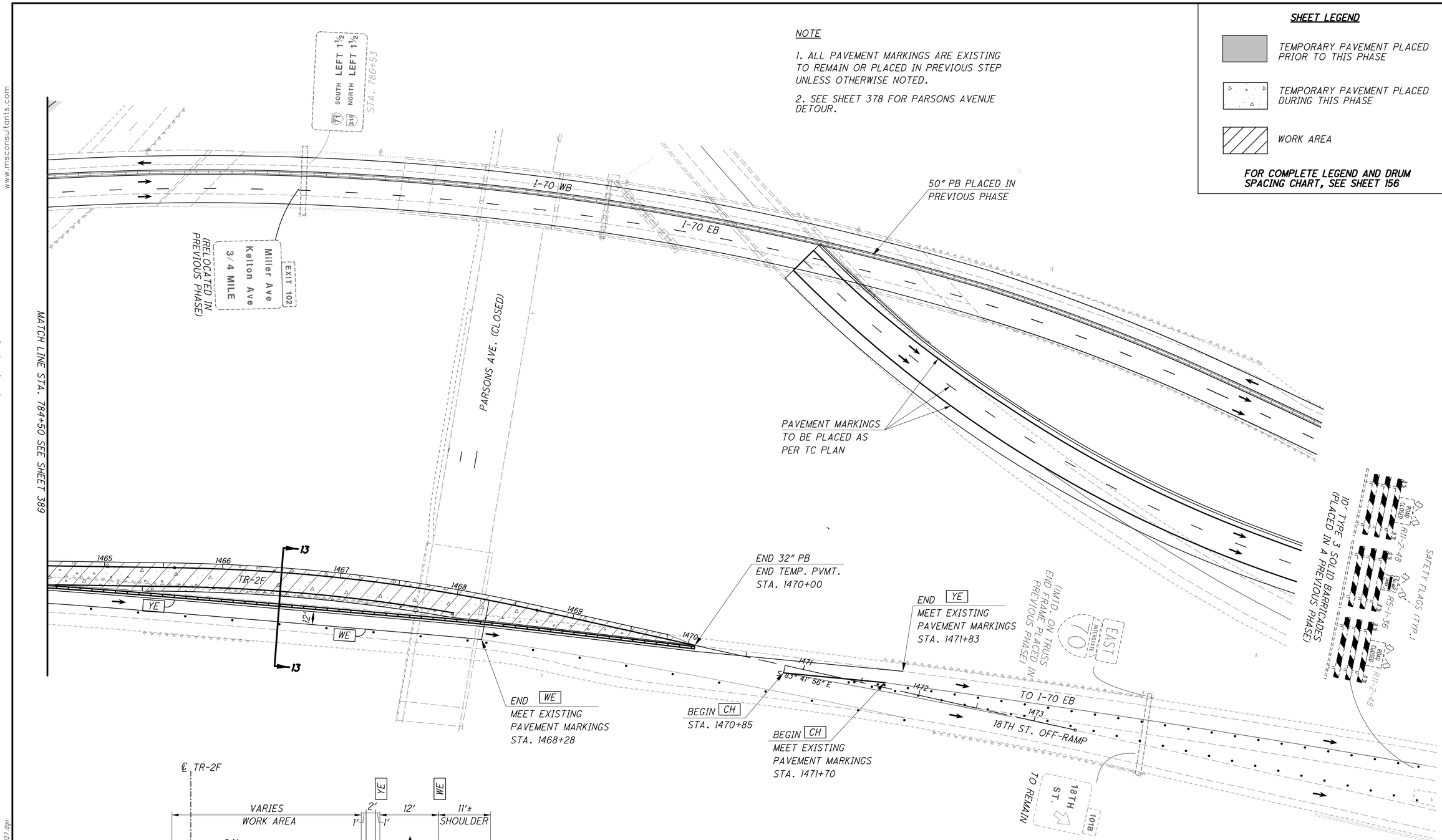

TYPICAL SECTION 13-13
NOT TO SCALE

NOTE

1. ALL PAVEMENT MARKINGS ARE EXISTING TO REMAIN OR PLACED IN PREVIOUS STEP UNLESS OTHERWISE NOTED.

2. SEE SHEET 378 FOR PARSONS AVENUE DETOUR.

SHEET LEGEND

- TEMPORARY PAVEMENT PLACED PRIOR TO THIS PHASE
- TEMPORARY PAVEMENT PLACED DURING THIS PHASE
- WORK AREA

FOR COMPLETE LEGEND AND DRUM SPACING CHART, SEE SHEET 156

0 20 40 80
HORIZONTAL SCALE IN FEET

CALCULATED JAH
CHECKED JML

MAINTENANCE OF TRAFFIC - PHASE 2B
TR-2F

FRA-70-14.54

PLOT.CEL
ms consultants, inc.
msconsultants.com
Ohio DOT Workspace
70\71 East Interchange 2E
www.msconsultants.com
Batchplot Spec: \\msconsultants.com\files\production\03\60\06634_2E\standards\plotdrv\batchplt.spc
Pen Table: \\msconsultants.com\files\Standards\ustn\ohdot\V8i\ms\plotting\pen\V8i_ms_std.tbl
Plot Driver: \\msconsultants.com\files\Standards\ustn\ohdot\v8i\ms\plotting\PDF.pltcfg
34" x 22"
Model: Sheet
Printed: 9/28/2018 @ 10:21:01 AM
File: N:\03\60\06634_2E\mot\sheets\105322MP2027.dgn
View: FENCE_VIEW1
By: kryan
ms consultants, inc.

PLOT.CEL
ms consultants, inc.
msconsultants.com
www.msconsultants.com

NOTES:

1. ALL PAVEMENT MARKINGS ARE EXISTING TO REMAIN OR PLACED IN A PREVIOUS MAINTENANCE OF TRAFFIC PHASE UNLESS OTHERWISE NOTED.

SHEET LEGEND

- TEMPORARY PAVEMENT PLACED PRIOR TO THIS PHASE
- TEMPORARY PAVEMENT PLACED DURING THIS PHASE
- WORK AREA

FOR COMPLETE LEGEND AND DRUM SPACING CHART, SEE SHEET 156

HORIZONTAL SCALE IN FEET
0 15 30 60
CALCULATED JAH
CHECKED JML

MAINTENANCE OF TRAFFIC - PHASE 2C
RAMP N1 CONNECTION TO PARSONS AVE.

FRA-70-14.54

391
2317

Ohio DOT Workspace
70\71 East Interchange 2E
DGN: ohdot\V8i
PCF: 60-06634_2E_Columbus
Batchplot Spec: \\msconsultants.com\Files\production\03\60\06634_2E\standards\plotdir\batchplt.spc
Pen Table: \\msconsultants.com\Files\Standards\ustn\ohdot\V8i\ms\plotting\pen\V8i_ms_std.tbl
Plot Driver: \\msconsultants.com\Files\Standards\ustn\ohdot\v8i\ms\plotting\PDF.pltcfg
Model: Sheet View: FENCE_VIEW1
Printed: 9/28/2018 @ 10:21:29 AM By: kryan
File: N:\03\60\06634_2E\mot\sheets\105322MP2053.dgn
34" x 22"

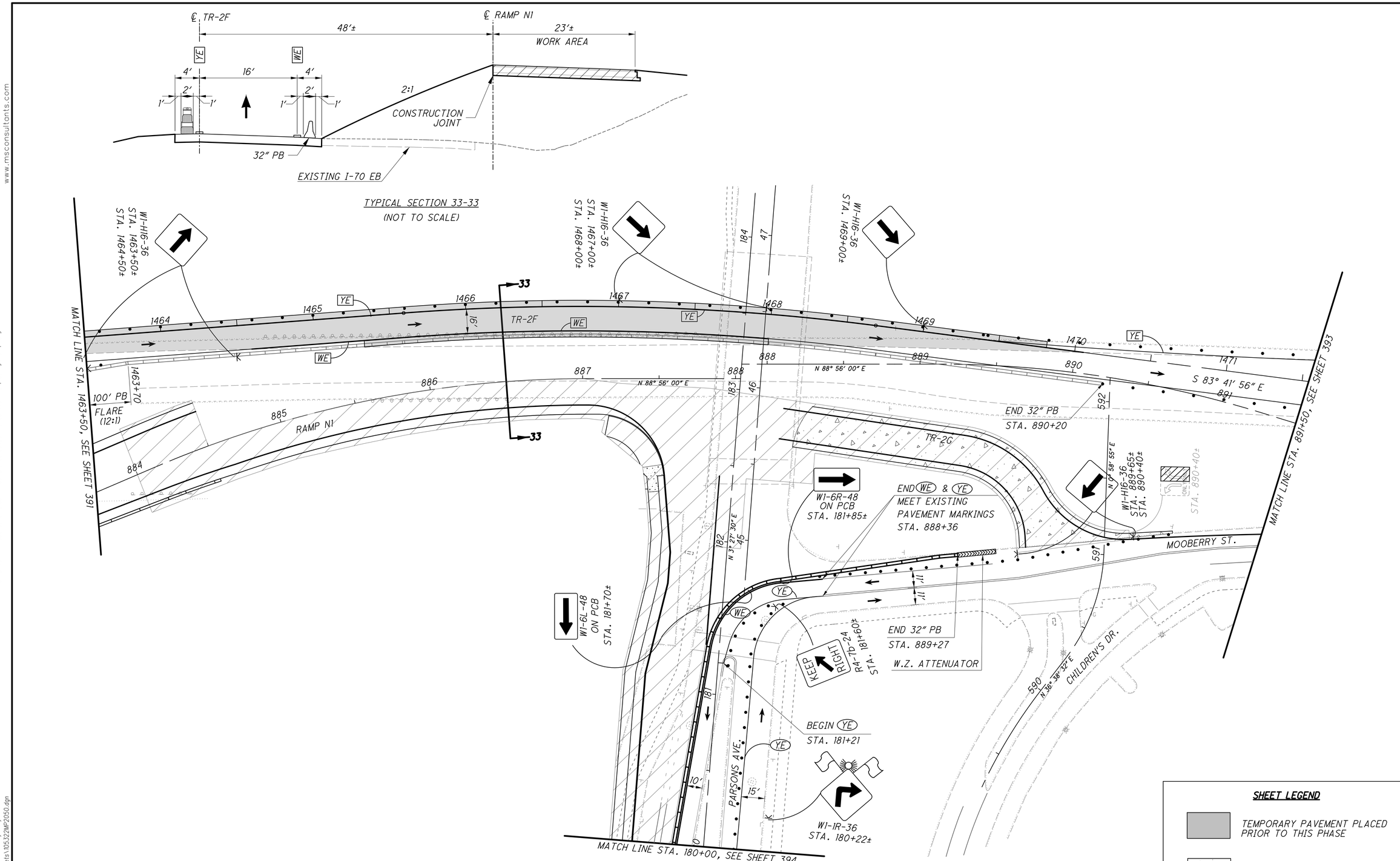

NOTES:

1. ALL PAVEMENT MARKINGS ARE EXISTING TO REMAIN OR PLACED IN A PREVIOUS MAINTENANCE OF TRAFFIC PHASE UNLESS OTHERWISE NOTED.

2. SEE SHEET 378 FOR PARSONS AVENUE DETOUR.

SHEET LEGEND

- TEMPORARY PAVEMENT PLACED PRIOR TO THIS PHASE
- TEMPORARY PAVEMENT PLACED DURING THIS PHASE
- WORK AREA

FOR COMPLETE LEGEND AND DRUM SPACING CHART, SEE SHEET 156

HORIZONTAL SCALE IN FEET 0 15 30 60

CALCULATED JAH
CHECKED JML

MAINTENANCE OF TRAFFIC - PHASE 2C
RAMP N1 CONNECTION TO PARSONS AVE.

FRA-70-14.54

ms consultants, inc.

PLOT.CEL
ms consultants, inc.
msconsultants.com
www.msconsultants.com

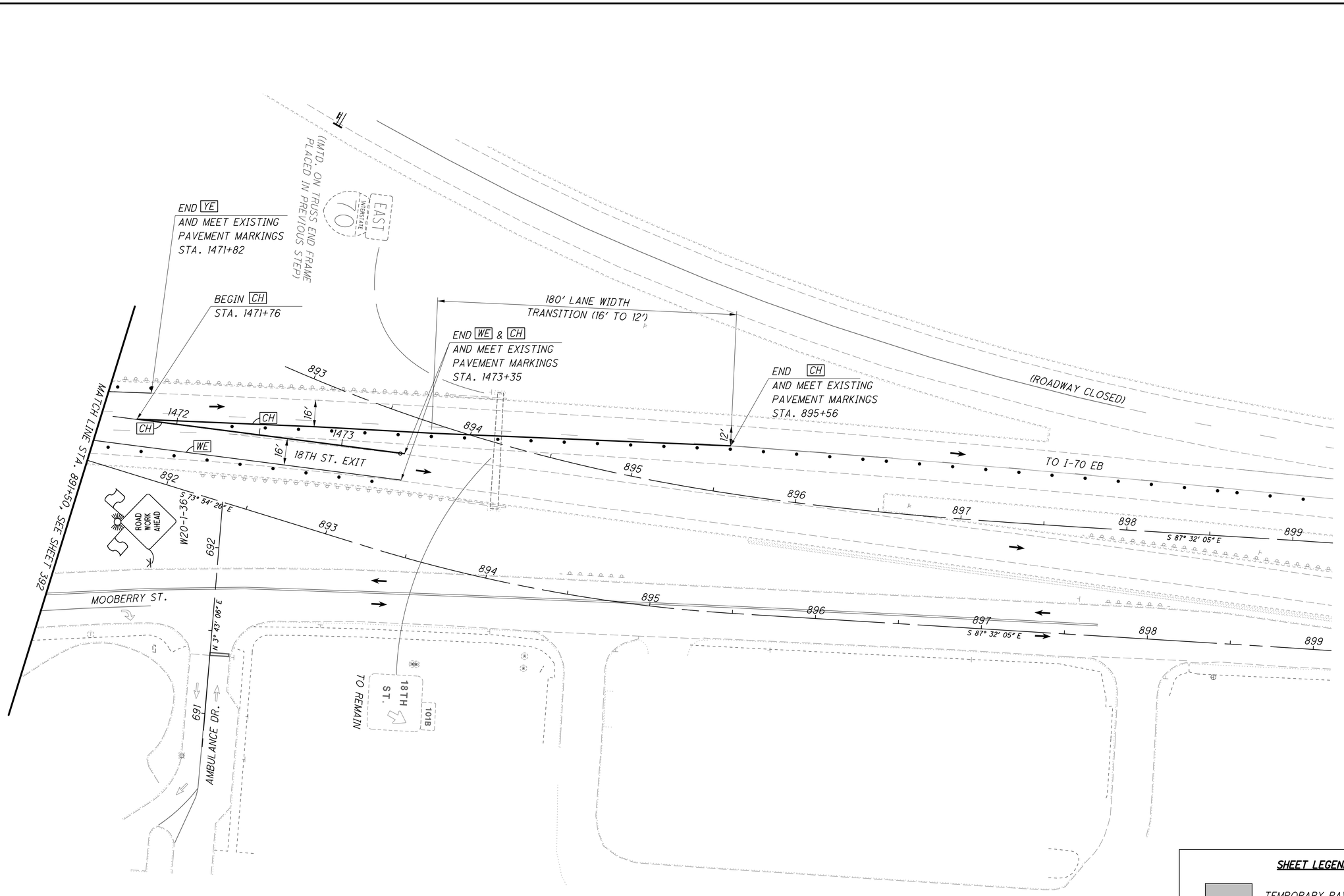

NOTES:

1. ALL PAVEMENT MARKINGS ARE EXISTING TO REMAIN OR PLACED IN A PREVIOUS MAINTENANCE OF TRAFFIC PHASE UNLESS OTHERWISE NOTED.

SHEET LEGEND

- TEMPORARY PAVEMENT PLACED PRIOR TO THIS PHASE
- TEMPORARY PAVEMENT PLACED DURING THIS PHASE
- WORK AREA

FOR COMPLETE LEGEND AND DRUM SPACING CHART, SEE SHEET 156

HORIZONTAL SCALE IN FEET
0 15 30 60

CALCULATED JAH
CHECKED JML

MAINTENANCE OF TRAFFIC - PHASE 2C
RAMP N1 CONNECTION TO PARSONS AVE.

FRA-70-14.54

393
2317

Batchplot Spec: \\msconsultants.com\Files\Production\03\60\06634_2E\standards\plotdrv\batchplt.spc
Pen Table: \\msconsultants.com\Files\Standards\ustn\ohdot\V8i\ms\plotting\pen\V8i_ms_std.tbl
Plot Driver: \\msconsultants.com\Files\Standards\ustn\ohdot\V8i\ms\plotting\PDF.pltcfg
Ohio DOT Workspace
70\71 East Interchange 2E
PCF: ohdotV8i
PCF: 60-06634_2E_Columbus
1" 0.5" 0
34" x 22"
Model: Sheet View: FENCE_VIEW1
Printed: 9/28/2018 @ 10:21:35 AM By: kryan
File: N:\03\60\06634_2E\mot\sheets\105322MP205.dgn

PLOT.CEL

ms consultants, inc.
msconsultants.com

www.msconsultants.com

Ohio DOT Workspace
70\71 East Interchange 2E

0 0.5" 1"

Batchlist Spec: \\msconsultants.com\Files\production\03\60\06634.2E\standards\plotdr\batchplt.spc
Pen Table: \\msconsultants.com\Files\Standards\ustn\ohdot\V8i\ms\plotting\pen\V8i_ms_std.tbl
Plot Driver: \\msconsultants.com\Files\Standards\ustn\ohdot\v8i\ms\plotting\PDF.pltcfg

PDF: ohdot\V8i
PCF: 60-06634_2E_Columbus

Model: Sheet
Printed: 9/28/2018 @ 10:21:39 AM
File: N:\03\60\06634_2E\mot\sheets\1053228MP2052.dgn

View: FENCE_VIEW1
By: kryan

34" x 22"

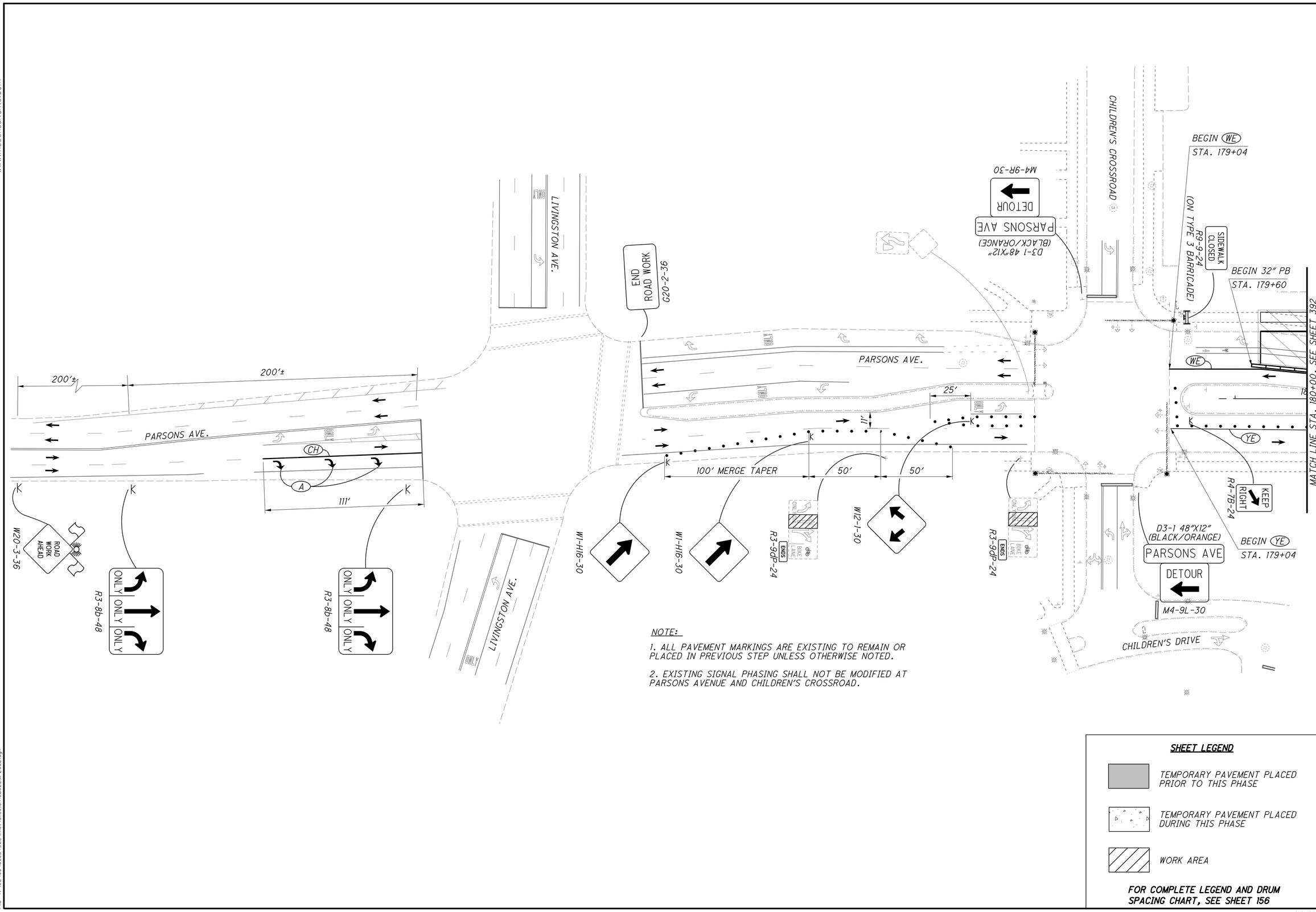

NOTE:

1. ALL PAVEMENT MARKINGS ARE EXISTING TO REMAIN OR PLACED IN PREVIOUS STEP UNLESS OTHERWISE NOTED.

2. EXISTING SIGNAL PHASING SHALL NOT BE MODIFIED AT PARSONS AVENUE AND CHILDREN'S CROSSROAD.

SHEET LEGEND

- TEMPORARY PAVEMENT PLACED PRIOR TO THIS PHASE
- TEMPORARY PAVEMENT PLACED DURING THIS PHASE
- WORK AREA

FOR COMPLETE LEGEND AND DRUM SPACING CHART, SEE SHEET 156

N

0 15 30 60
HORIZONTAL SCALE IN FEET

CALCULATED JAH
CHECKED JML

MAINTENANCE OF TRAFFIC - PHASE 2C
RAMP N1 CONNECTION TO PARSONS AVE.

FRA-70-14.54

394
2317

ms consultants, inc.

PLOT.CEL

ms consultants, inc.
msconsultants.com

Ohio DOT Workspace
70\71 East Interchange 2E
www.msconsultants.com

Batchplot Spec: \\msconsultants.com\Files\Production\03\60\06634.2E\standards\plotdrv\batchplt.spc
Pen Table: \\msconsultants.com\Files\Standards\ustn\ohdot\V8i\ms\plotting\pen\V8i_ms_std.tbl
Plot Driver: \\msconsultants.com\Files\Standards\ustn\ohdot\V8i\ms\plotting\PDF.pltcfg
PDF: ohdotV8i
PCF: 60-06634_2E_Columbus

1" 0.5" 0

34" x 22"

View: FENCE_VIEW1
By: kryan

Model: Sheet
Printed: 9/28/2018 @ 10:21:57 AM
File: \\msconsultants.com\Files\Production\03\60\06634.2E\mot\sheets\105327MM001.dgn

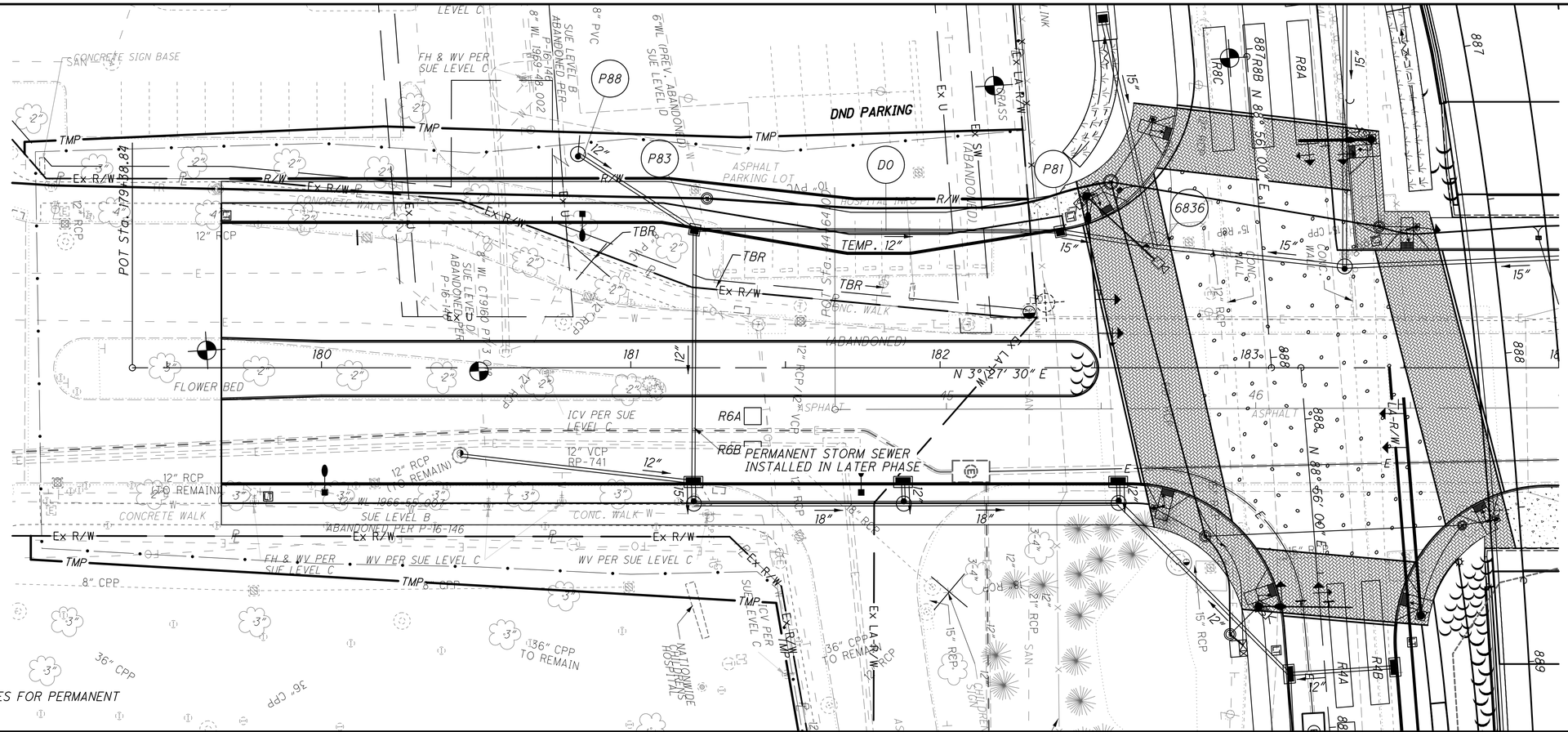

SEE STORM SEWER PROFILES FOR PERMANENT DRAINAGE INSTALLATIONS.

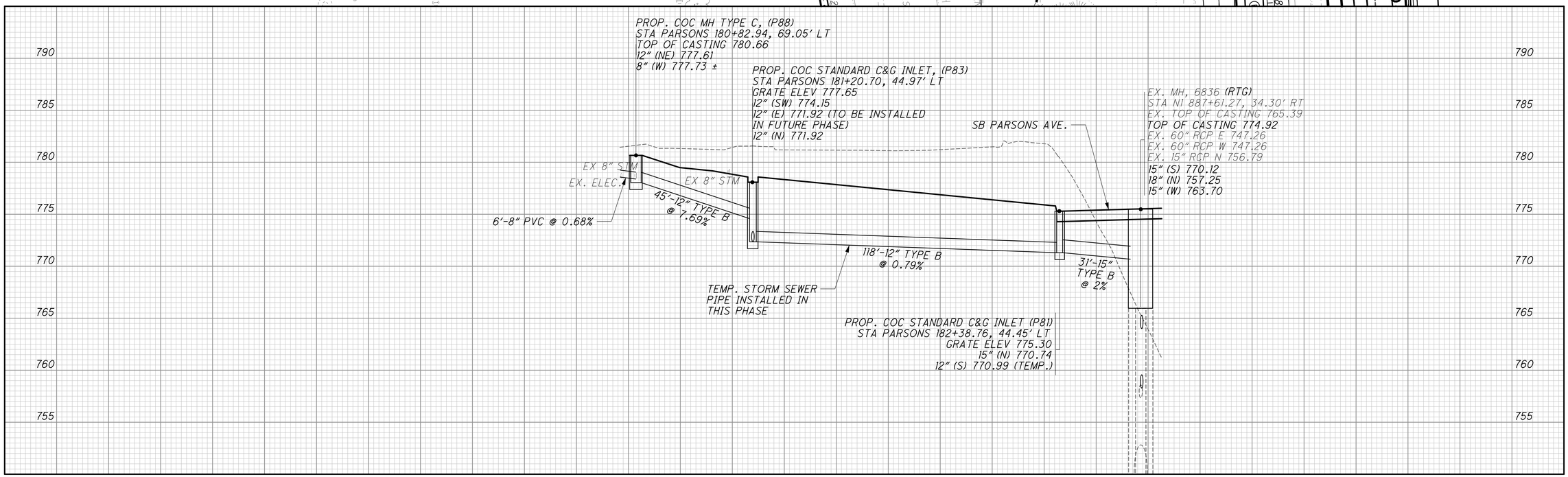

N

HORIZONTAL SCALE IN FEET
0 10 20 40

CALCULATED
CHECKED

MAINTENANCE OF TRAFFIC - PHASE 2C
TEMPORARY DRAINAGE INSTALLATION

FRA-70-14.54

394A
2317

ms consultants, inc.

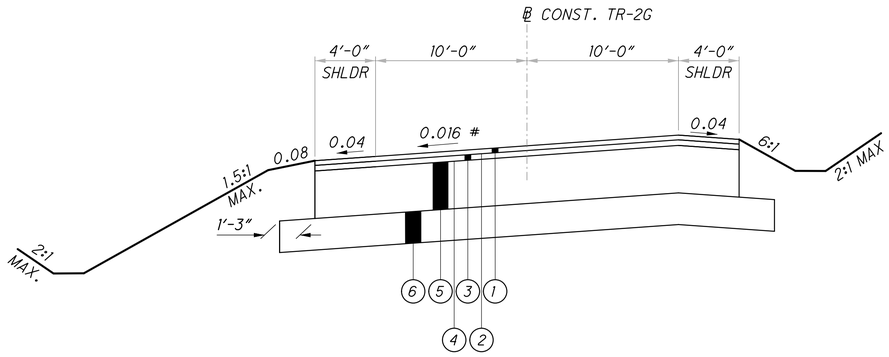

SUPERELEVATED SECTION - PAVEMENT FOR MAINTAINING TRAFFIC, CLASS A - TR-2G

SECTION APPLIES:
STA. 1488+43.70 TO STA. 1490+40.50 = 196.80 LIN. FT.

- CROSS SLOPE VARIES FROM +0.0175 TO -0.016
FROM 1488+43.73 TO 1489+30.56

LEGEND FOR: ITEM 615 - PAVEMENT FOR MAINTAINING TRAFFIC, CLASS A, AS PER PLAN

1. ITEM 441 - 1.5" ASPHALT CONCRETE SURFACE, TYPE 1, PG64-22
2. ITEM 407 - TACK COAT FOR INTERMEDIATE COURSE (0.04 GAL/SY)
3. ITEM 441 - 1.75" ASPHALT CONCRETE INTERMEDIATE COURSE, TYPE 2, PG64-22
4. ITEM 407 - TACK COAT (0.075 GAL/SY)
5. ITEM 302 - 5.5" ASPHALT CONCRETE BASE, PG64-22
6. ITEM 304 - 6" AGGREGATE BASE

CALCULATED JAH
CHECKED JML

MOT - TYPICAL SECTIONS - TR-2G (TEMP MOOBERRY ST CONNECTION) STA. 1488+43.70 TO STA. 1490+40.50

FRA-70-14.54

395
2317

PLOT.CEL
ms consultants, inc.
msconsultants.com
Ohio DOT Workspace
70\71 East Interchange 2E
www.msconsultants.com
Batchplot Spec: \\msconsultants.com\files\production\03\60\06634_2E\standards\plotdrv\batchplt.spc
Pen Table: N:\03\60\06634_2E\standards\tables\V8i_ms_std_NoClouds.tbl
Plot Driver: \\msconsultants.com\files\Standards\ustn\ohdot\v8i\ms\plotting\PDF.pltcfg
34" x 22"
Model: Sheet
Printed: 2/12/2019 @ 9:58:33 AM
File: N:\03\60\06634_2E\mot\sheets\77370MY602G01.dgn
View: FENCE_VIEW1
By: awhite

PLOT.CEL

ms consultants, inc.
msconsultants.com

Ohio DOT Workspace
70\71 East Interchange 2E
www.msconsultants.com

1"
0.5"
0

ODF: ohdot\Bi
PCF: 60-06634_2E_Columbus

Batchplot Spec: \\msconsultants.com\Files\production\03\60\06634_2E\standards\plotdrv\batchplt.spc
Pen Table: N:\03\60\06634_2E\standards\tables\V8i_ms_std_NoClouds.tbl
Plot Driver: \\msconsultants.com\Files\Standards\usetn\ohdot\v8i\ms\plotting\PDF.pltcfg

Model: Sheet
Printed: 2/12/2019 @ 9:59:24 AM
File: N:\03\60\06634_2E\mot\sheets\77370MP602001.dgn

View: FENCE_VIEW1
By: awhite

34" x 22"

TEMP MOOBERRY ST CONNECTION

MOT PLAN AND PROFILE TR-2G
STA. 1488+03.06 TO STA. 1490+61.5

CALCULATED JAH
CHECKED JML

0 20 40 80
HORIZONTAL SCALE IN FEET

FRA-70-14.54

396
2317

ms consultants, inc.

PLOT.CEL

ms consultants, inc.
msconsultants.com

www.msconsultants.com

Ohio DOT Workspace
70\71 East Interchange 2E

1" 0.5" 0

Batchplot Spec: \\msconsultants.com\files\production\Q3\60\06634_2E\standards\plotdr\batchplt.spc
Pen Table: \\msconsultants.com\files\Standards\usin\ohdot\V8i\ms\plotting\pen\V8i_ms_std.tbl
Plot Driver: \\msconsultants.com\files\Standards\usin\ohdot\V8i\ms\plotting\PDF.pltcfg
PCF: ohdotV8i
PCF: 60-06634_2E_Columbus

Model: Sheet
Printed: 9/28/2018 @ 10:22:09 AM
File: N:\03\60\06634_2E\mot\sheets\773705602001.dgn
By: kryan
View: FENCE_VIEW1
34" x 22"

SEEDING END WIDTH	SEEDING SQ. YDS.
61	272
37	307
35	

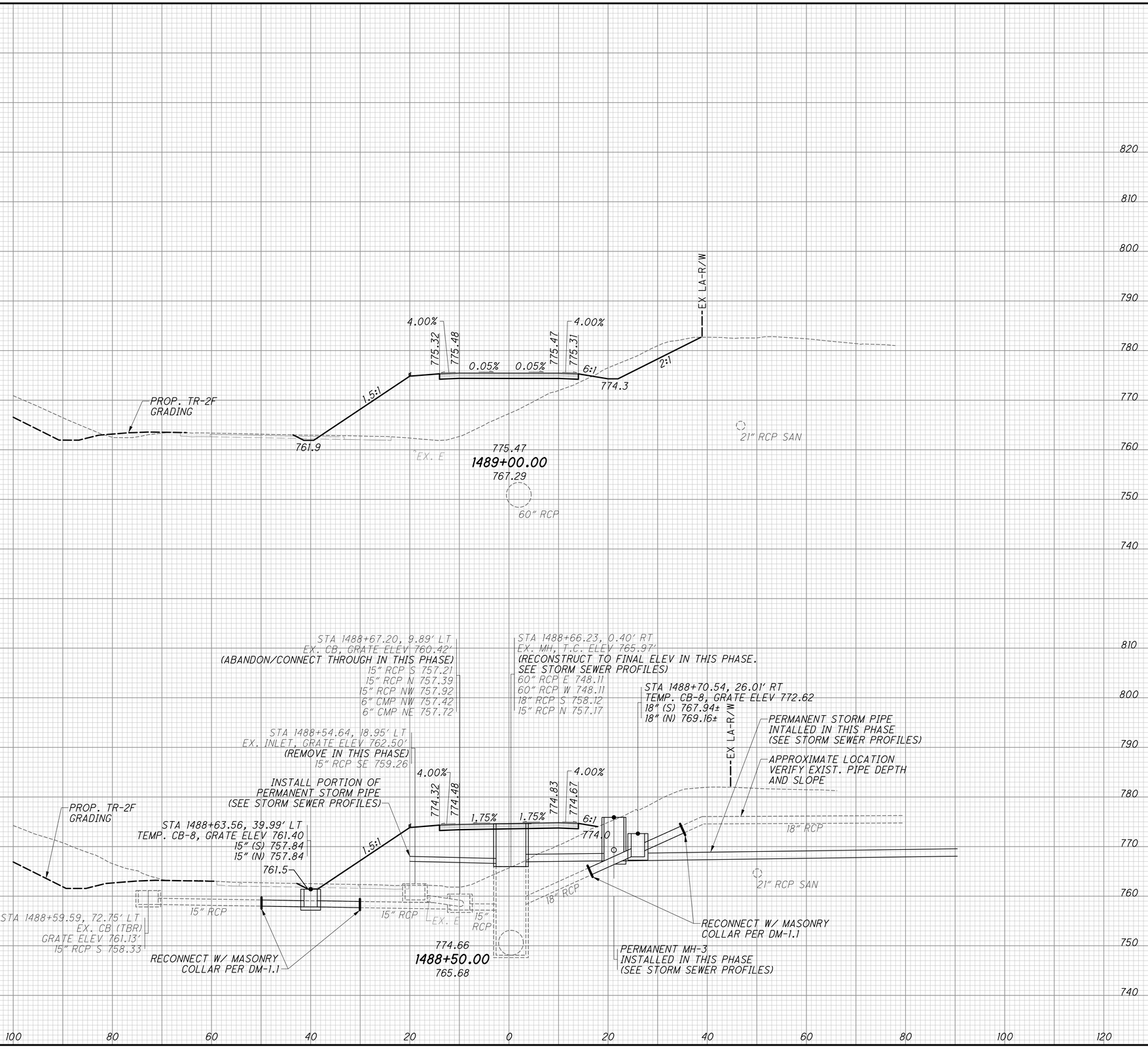

END AREA CUT	END AREA FILL	VOLUME CUT	VOLUME FILL
49	386		
		49	717
4	388		
		1	122
		50	839

CALCULATED JAH
CHECKED JML

MOT - CROSS SECTIONS TR-2G (TEMP MOOBERRY ST CONNECTION) STA. 1488+50 TO STA. 1489+00

FRA-70-14.54

397
2317

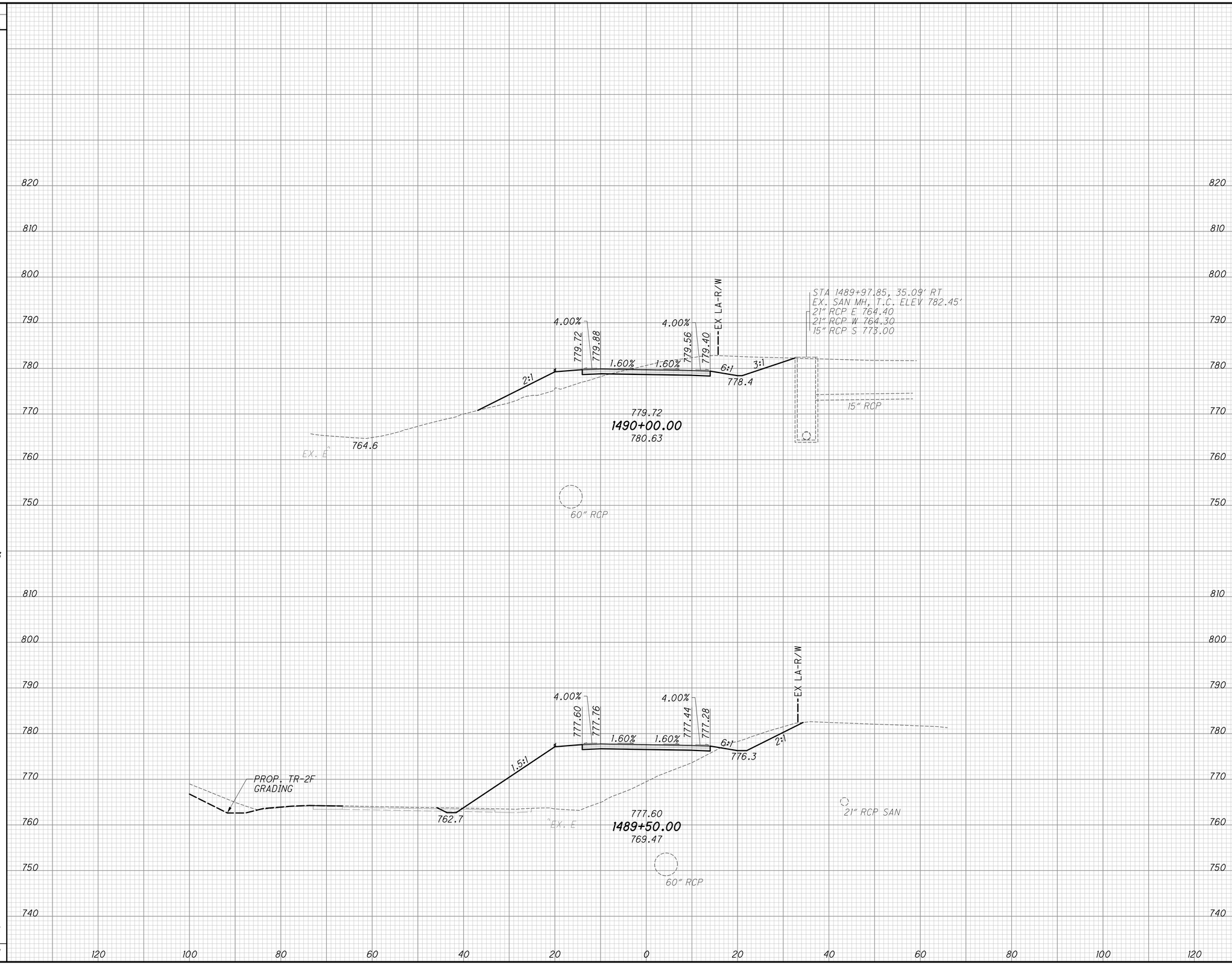

SEEDING END WIDTH	SEEDING SQ. YDS.	END AREA CUT	END AREA FILL	VOLUME CUT	VOLUME FILL
44		106	60		
	283			128	445
58		32	421		
	331			75	747
	614			203	1192

CALCULATED JAH
CHECKED JML

MOT - CROSS SECTIONS TR-2G (TEMP MOOBERRY ST CONNECTION) STA. 1489+50 TO STA. 1490+50

FRA-70-14.54

398
2317

ms consultants, inc.

PLOT.CEL

ms consultants, inc.
msconsultants.com

Ohio DOT Workspace
70\71 East Interchange 2E
www.msconsultants.com

Batchplot Spec: \\msconsultants.com\files\production\03\60\06634_2E\standards\plotdrv\batchplt.spc
Pen Table: \\msconsultants.com\files\Standards\ustn\ohdot\V8i\ms\plotting\pen\V8i_ms_std.tbl
Plot Driver: \\msconsultants.com\files\Standards\ustn\ohdot\V8i\ms\plotting\PDF.pltcfg

34" x 22"

Model: Sheet
Printed: 9/28/2018 @ 10:22:10 AM
File: N:\03\60\06634_2E\mot\sheets\77370XS602G02.dgn
View: FENCE_VIEW1
By: kryan

34" x 22"

Model: Sheet
Printed: 9/28/2018 @ 10:22:12 AM
File: N:\03\60\06634_2E\mot\sheets\77370XS602G03.dgn
View: FENCE_VIEW1
By: kryan

Batchplot Spec: \\msconsultants.com\files\production\03\60\06634_2E\standards\plotdrv\batchplt.spc
Pen Table: \\msconsultants.com\files\Standards\ustn\ohdot\V8i\ms\plotting\pen\V8i_ms_std.tbl
Plot Driver: \\msconsultants.com\files\Standards\ustn\ohdot\v8i\ms\plotting\PDF.pltcfg

PCF: ohdotV8i
PCF: 60-06634_2E_Columbus

0 1"
0.5"

Ohio DOT Workspace
70\71 East Interchange 2E

PLOT.CEL

ms consultants, inc.
msconsultants.com

www.msconsultants.com

SEEDING
END WIDTH | SQ. YDS.

148 | 148

22

760 770 780 790 800 810 820 830 840

120 100 80 60 40 20 0 20 40 60 80 100 120

EX LA-R/W

STA 1490+32.06, 84.59' LT
EX. MH, T.C. ELEV 783.55'
60" RCP W 750.10
60" RCP E 750.20
15" RCP SE 777.55
15" RCP N 761.86

12.5:1

781.84

0.89%

781.71

21" RCP SAN

0.89%

781.44
1490+40.50
781.44

END AREA
CUT | FILL

57 | 0

VOLUME
CUT | FILL

122 | 122

45 | 45

FRA-70-14.54

MOT - CROSS SECTIONS TR-2G (TEMP MOOBERRY ST CONNECTION) STA. 1490+40.50

CALCULATED JAH
CHECKED JML

ms consultants, inc.

PLOT.CEL

ms consultants, inc.
rmsconsultants.com

www.rmsconsultants.com

Ohio DOT Workspace
70\71 East Interchange 2E

0 0.5" 1"

PDF: ohdot\V8i
PLCF: 60-06634_2E_Columbus

Batchplot Spec: \\rmsconsultants.com\files\production\03\60\06634_2E\standards\plotdrv\batchplt.spc
Pen Table: \\rmsconsultants.com\files\Standards\ustn\ohdot\V8i\ms\plotting\pen\V8i_ms_std.tbl
Plot Driver: \\rmsconsultants.com\files\Standards\ustn\ohdot\v8i\ms\plotting\PDF.pltcfg

Model: Sheet View: FENCE_VIEW1
Printed: 9/28/2018 @ 10:22:13 AM By: kryan
File: \\rmsconsultants.com\files\Production\03\60\06634_2E\mot\sheets\77370MY602101.dgn

34" x 22"

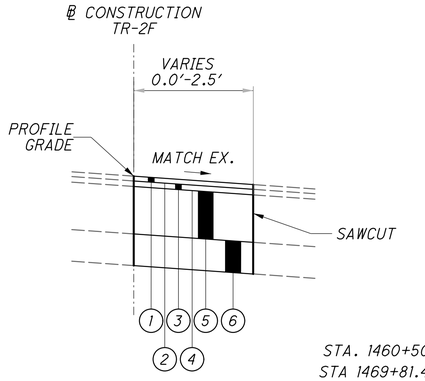

SAWCUT SECTION
TR - 2F

SECTION APPLIES:
STA. 1460+50.00TO 1461+31.47 = 81.47 LIN. FT.
STA 1469+81.40 TO 1470+05.69 = 24.29 LIN. FT.
TOTAL = 105.76 LIN. FT.

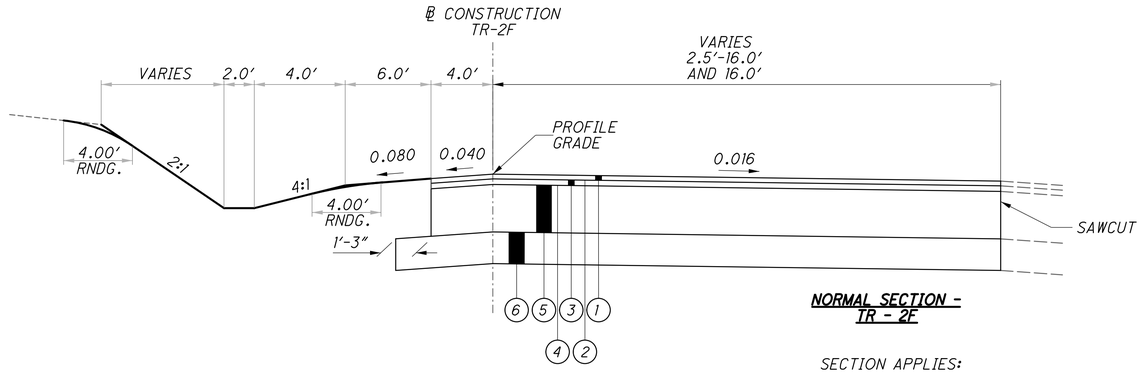

NORMAL SECTION -
TR - 2F

SECTION APPLIES:
STA. 1461+31.47 TO 1464+58.57 = 327.10 LIN. FT.

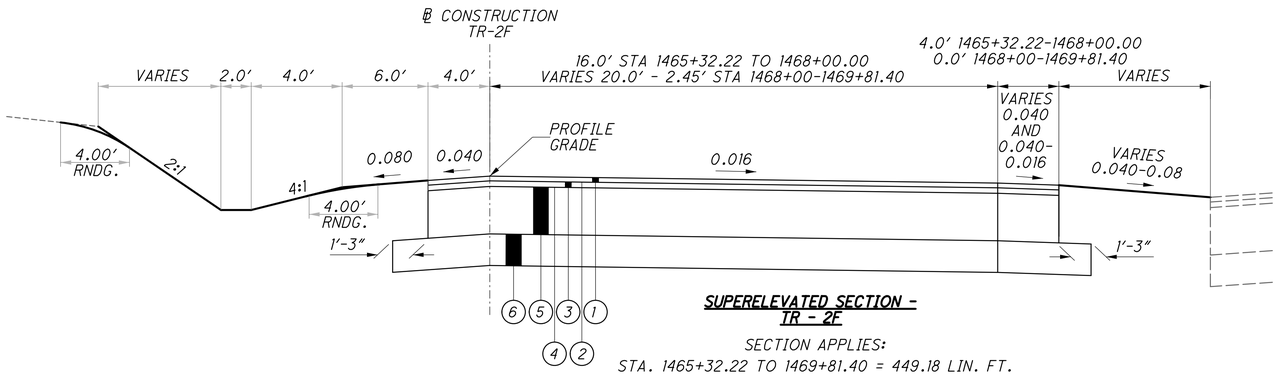

SUPERELEVATED SECTION -
TR - 2F

SECTION APPLIES:
STA. 1465+32.22 TO 1469+81.40 = 449.18 LIN. FT.

LEGEND FOR: ITEM 615 - PAVEMENT FOR MAINTAINING TRAFFIC, CLASS A

(1) ITEM 441 - 1.25" ASPHALT CONCRETE SURFACE, TYPE 1, PG64-22

(2) ITEM 407 - TACK COAT FOR INTERMEDIATE COURSE (0.04 GAL/SY)

(3) ITEM 441 - 1.75" ASPHALT CONCRETE INTERMEDIATE COURSE, TYPE 2, PG64-22

(4) ITEM 407 - TACK COAT (0.075 GAL/SY)

(5) ITEM 302 - 5.5" ASPHALT CONCRETE BASE, PG64-22

(6) ITEM 304 - 6" AGGREGATE BASE

(7) ITEM 609 - CURB, TYPE 4-C

(8) ITEM 606 - GUARDRAIL, TYPE 5

CALCULATED | CHECKED

MOT TYPICAL SECTIONS TR-2F (TEMP I-70 EB EXIT TO 18TH ST.)
STA. 1460+50.00 TO STA. 1470+05.69

FRA-70-14.54

400
2317

ms consultants, inc.

PLOT.CEL

ms consultants, inc.
msconsultants.com

www.msconsultants.com

Ohio DOT Workspace
70\71 East Interchange 2E

1" 0.5" 0

Batchplot Spec: \\msconsultants.com\files\production\03\60\06634_2E\standards\plotdrv\batchplt.spc
Pen Table: \\msconsultants.com\files\Standards\usth\ohdot\V8i\ms\plotting\pen\V8i_ms_std.tbl
Plot Driver: \\msconsultants.com\files\Standards\usth\ohdot\V8i\ms\plotting\PDF.pltcfg

PCF: ohdotV8i
PCF: 60-06634_2E_Columbus

Model: Sheet
Printed: 9/28/2018 @ 10:22:19 AM
File: \\msconsultants.com\files\Production\03\60\06634_2E\mot\sheets\773701MP602F01.dgn

34" x 22"

View: FENCE_VIEW1
By: kryan

LEGEND

TEMP. PAVEMENT PLACED DURING THIS PHASE

TEMP. PAVEMENT PLACED PRIOR TO THIS PHASE

℄ CONSTRUCTION TR-2F

TBR

PARSONS AVE.

MOOBERRY ST.

D1

D2

15"

1460 1461 1462 1463 1464 1465 1466 1467 1468 1469 1470 1471

N 84° 36' 13" E

S 83° 41' 56" E

PC STA. 1465+59.31

PT STA. 1468+68.82

P.I. Sta. 1467+14.61
Δ = 11° 41' 51" (RT)
Dc = 3° 46' 46"
R = 1,516.00'
T = 155.29'
L = 309.51'
E = 7.93'
C = 308.97'
C.B. = S 89° 32' 51" E

12" RCP
15" RCP
21" RCP
24" RCP
30" RCP
36" RCP
60" RCP
8" VCP
8" PVC
12" VCP
12" CPP
12" CMP
21" VCP
SAN
W
E
G
T
OHU
(ABANDONED)
M.H. REMOVED
WV PER SUE LEVEL D
SUE LEVEL D
SUE LEVEL C
SUE LEVEL B
ABANDONED PER P-16-146
8" WL (PREV. ABANDONED)
8" WL (PREV. ABANDONED) SUE LEVEL D
8" WL (7960 PVT) SUE LEVEL D
8" WL (968-48.002) SUE LEVEL B
12" FRA-062-15.30.017 SUE LEVEL B ABANDONED PER P-16-146
FH & WV PER SUE LEVEL C
ICV PER SUE LEVEL C
LIMITS OF ABANDONED WATER LINE PER P-16-146
FH & W SUE LEVEL C
SEE CPP TO KRUM

767.38 767.35 767.31 767.30 767.30 767.20 767.11 767.07 766.99 766.84 766.64 766.45 766.25 766.06 765.86 765.63 765.34 765.02 764.70 764.33 763.96 763.59 763.22 762.96 762.76 762.65 762.61 762.65 762.76 762.91 763.06 763.14 763.26 763.45 763.72 764.06 764.49 764.99 765.52

780
770
760
750

GRAPHICAL GRADE

767.39

PROPOSED PROFILE GRADE

EXISTING PROFILE GRADE

EX. ELEC

EX. SG COND

135.00' VC
P.V.I. STA 1466+80.00
ELEV = 762.35'
K = 80

145.00' VC
P.V.I. STA 1469+00.00
ELEV = 763.39'
K = 80

PVC STA 1466+12.50
ELEV 763.08

PVT STA 1467+47.50
ELEV 762.75

PVC STA 1468+27.50
ELEV 763.15

PVT STA 1469+72.50
ELEV 764.94

765.62

-1.09 %
+0.59 %
+0.59 %
+0.33 %
+2.13 %

EX. 12" RCP

STA 1467+34.96, 6.80' RT
EX. CB, GRATE ELEV 760.92
EX. 15" CPP S 758.22
EX. 12" RCP SE 758.32

STA 1467+44.21, 57.11' RT
EX. CB, GRATE ELEV 761.40

STA 1468+44.67, 0.91' LT
EX. CB, GRATE ELEV 761.13
EX. 15" RCP S 758.33

STA 1468+50.34, 62.17' RT
EX. CB, GRATE ELEV 760.42
EX. 15" RCP S 757.21
EX. 15" RCP N 757.39
EX. 15" RCP NW 757.92
EX. 6" CMP NW 757.42
EX. 6" CMP NE 757.72

767.22 767.38 767.31 767.16 767.12 766.68 766.22 765.59 765.06 764.58 763.93 763.92 764.17 764.51 764.03 763.75 763.59 761.24 763.41 764.32 765.52 766.63 767.72 768.83

1460 1461 1462 1463 1464 1465 1466 1467 1468 1469 1470 1471

HORIZONTAL SCALE IN FEET
0 20 40 80

CALCULATED

CHECKED

TEMP I-70 EB EXIT TO 18TH ST.

MOT - PLAN AND PROFILE TR-2F

STA. 1460+50.00 TO STA. 1470+05.69

FRA-70-14.54

401
2317

ms consultants, inc.

34" x 22"

Model: Sheet
Printed: 9/28/2018 @ 10:22:21 AM
File: \\msconsultants.com\files\Production\03\60\06634_2E\mot\sheets\77370MXL602.dgn

View: FENCE_VIEW1
By: kryan

Batchplot Spec: \\msconsultants.com\files\production\03\60\06634_2E\standards\plotdrv\batchplt.spc
Pen Table: \\msconsultants.com\files\Standards\ustn\ohdot\V8i\ms\plotting\pen\V8i_ms_std.tbl
Plot Driver: \\msconsultants.com\files\Standards\ustn\ohdot\v8i\ms\plotting\PDF.pltcfg

0 1"
0.5"

DGN: ohdotV8i
PCF: 60-06634_2E_Columbus

Ohio DOT Workspace
70\71 East Interchange 2E

ms consultants, inc.
msconsultants.com

PLOT.CEL

www.msconsultants.com

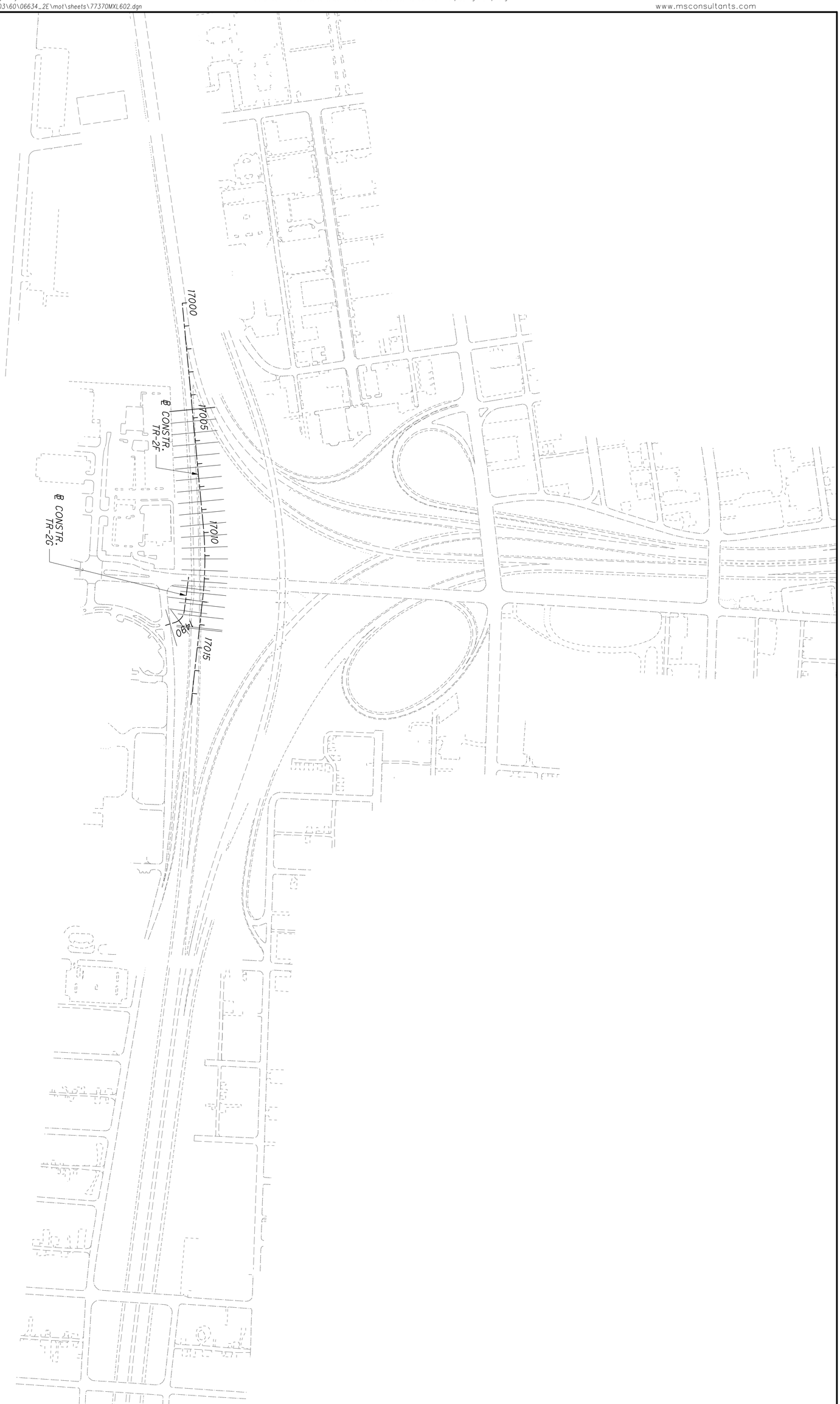

34" x 22"
Model: Sheet View: FENCE_VIEW1
Printed: 9/28/2018 @ 10:22:29 AM By: kryan
File: \\msconsultants.com\files\Production\03\60\06634_2E\mot\sheets\77370XM602f01.dgn
Batchplot Spec: \\msconsultants.com\files\production\03\60\06634_2E\standards\plotdrv\batchplt.spf
Pen Table: S:\std\plotting\ustn\V8i\pen\V8i_ms_std.tbl
Plot Driver: \\msconsultants.com\files\Standards\ustn\ohdot\v8i\ms\plotting\PDF.pltcfg
DGF: ohdotV8i
PCF: 60-06634_2E_Columbus
Ohio DOT Workspace
70\71 East Interchange 2E
PLOT.CEL
ms consultants, inc.
msconsultants.com
www.msconsultants.com

SEEDING		
	END WIDTH	SQ. YDS.
0	0.00	0

EX. SG COND

EX. ELEC
EX. ELEC

676.38
1460+50.00
767.38

MEET EXISTING PAVEMENT

EX. ELEC

767.31
1461+00.00
767.31

SAW CUT

EX. ELEC

END AREA		VOLUME	
	CUT		FILL
2	2	0	0
0	0	0	0
0	0	0	0

403
2317

FRA-70-14.54

MOT - CROSS SECTIONS - TR-2F (TEMP I-70 EB TO 18TH ST.)
STA. 1460+50 TO STA. 1461+00

CALCULATED
CHECKED

ms consultants, inc.

SEEDING		
END WIDTH	34.17	46.91
SQ. YDS.	95	225
320		

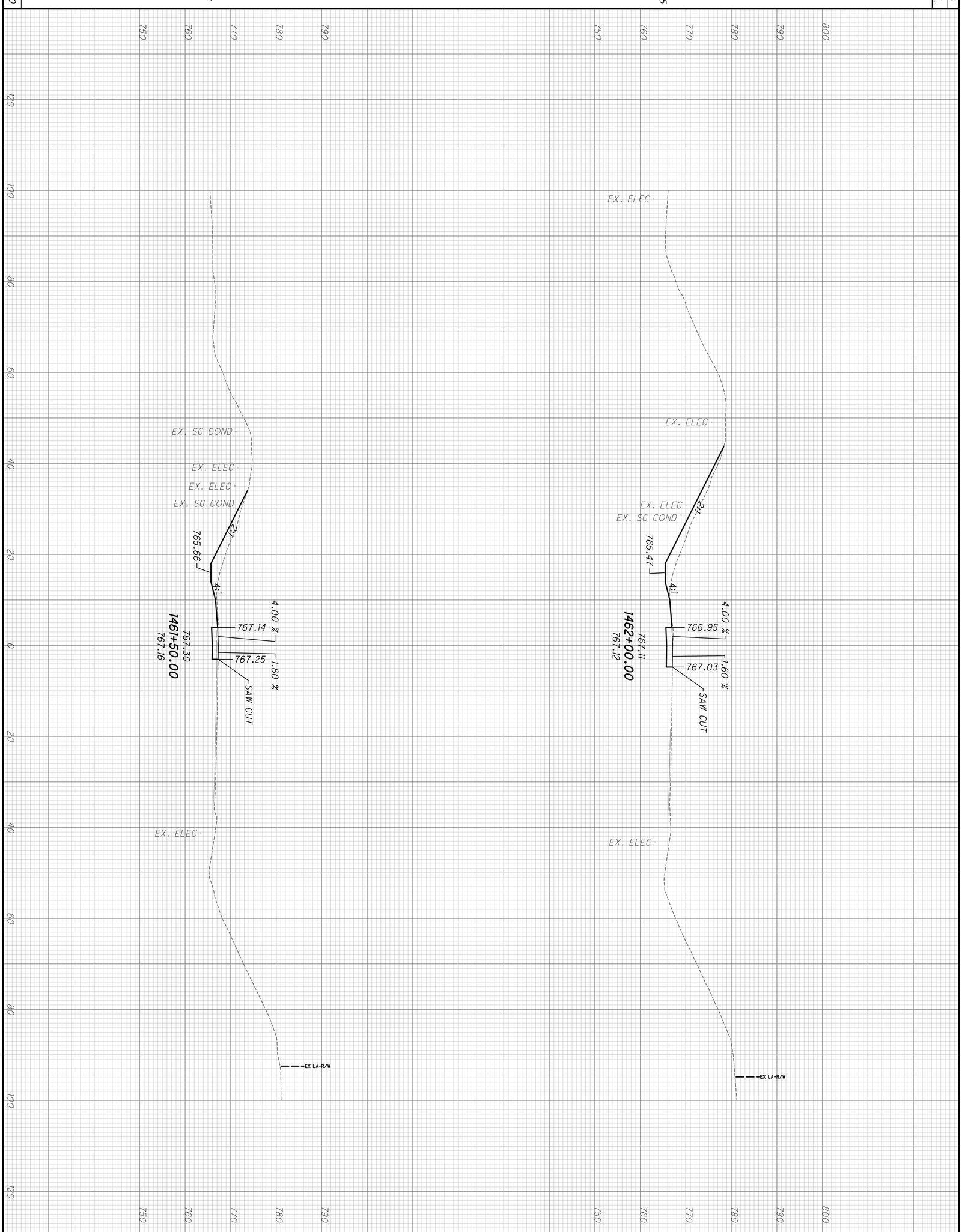

END AREA		
CUT	43	54
FILL	0	0
VOLUME		
CUT	42	90
FILL	0	0
93		
0		
132		
0		

404
2317

FRA-70-14.54

MOT - CROSS SECTIONS - TR-2F (TEMP I-70 EB TO 18TH ST.)
STA. 1461+50 TO STA. 1462+00

CALCULATED
CHECKED

34" x 22"
Model: Sheet View: FENCE_VIEW1
Printed: 9/28/2018 @ 10:22:32 AM By: kryan
File: \\msconsultants.com\files\Production\03\60\06634_2E\mot\sheets\77370XM602101b.dgn
Batchplot Spec: \\msconsultants.com\files\production\03\60\06634_2E\standards\plotdrv\batchplt.spc
Pen Table: S:\std\plotting\ustn\V8i\pen\V8i_ms_std.tbl
Plot Driver: \\msconsultants.com\files\Standards\ustn\ohdot\v8i\ms\plotting\PDF.pltcfg
DGF: ohdotV8i
PCF: 60-06634_2E_Columbus
Ohio DOT Workspace
70\71 East Interchange 2E
PLOT.CEL
ms consultants, inc.
msconsultants.com
www.msconsultants.com

SEEDING	1462+50.00	1463+00.00	1463+50.00
END WIDTH	53.65	52.36	55.38
SQ. YDS.	279	295	299
873			

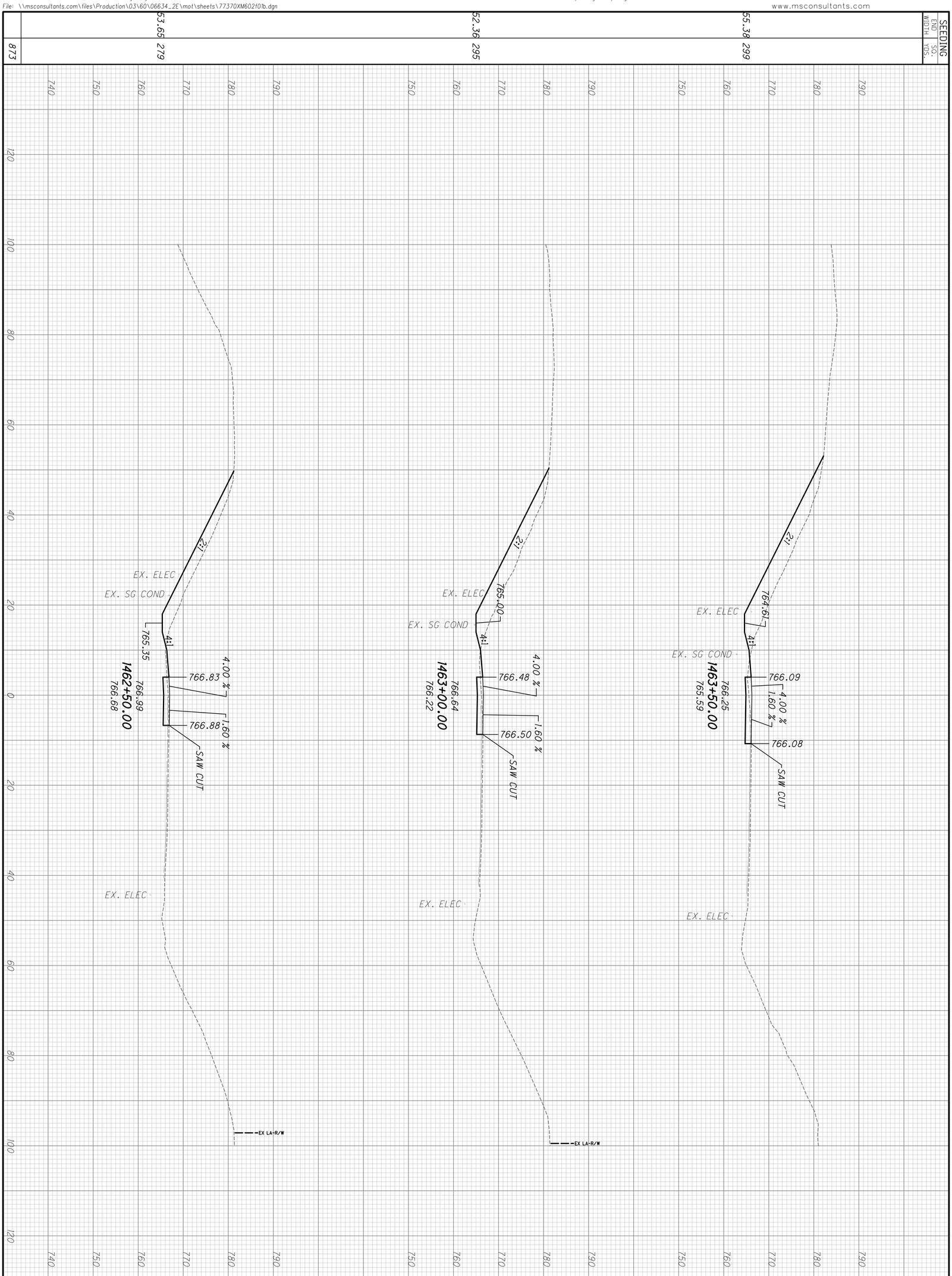

	1462+50.00	1463+00.00	1463+50.00
END AREA CUT	89	117	144
END AREA FILL	2	2	2
VOLUME CUT	133	191	242
VOLUME FILL	2	4	4
566			
10			

405 / 2317	FRA-70-14.54	MOT - CROSS SECTIONS - TR-2F (TEMP I-70 EB TO 18TH ST.) STA. 1462+50 TO STA. 1463+50	CALCULATED / CHECKED

ms consultants, inc.

34" x 22"
Model: Sheet View: FENCE_VIEW1
Printed: 9/28/2018 @ 10:22:34 AM By: kryan
File: \\msconsultants.com\files\Production\03\60\06634_2E\mot\sheets\77370XM602101c.dgn
Batchplot Spec: \\msconsultants.com\files\production\03\60\06634_2E\standards\plotdrv\batchplt.spc
Pen Table: S:\std\plotting\ustn\V8i\pen\V8i_ms_std.tbl
Plot Driver: \\msconsultants.com\files\Standards\ustn\ohdot\v8i\ms\plotting\PDF.pltcfg
DGF: ohdotV8i
PCF: 60-06634_2E_Columbus
Ohio DOT Workspace
70\71 East Interchange 2E
PLOT.CEL
ms consultants, inc.
msconsultants.com
www.msconsultants.com

SEEDING END WIDTH	SEEDING SQ. YDS.
57.95	315
58.25	323
62.46	335

973

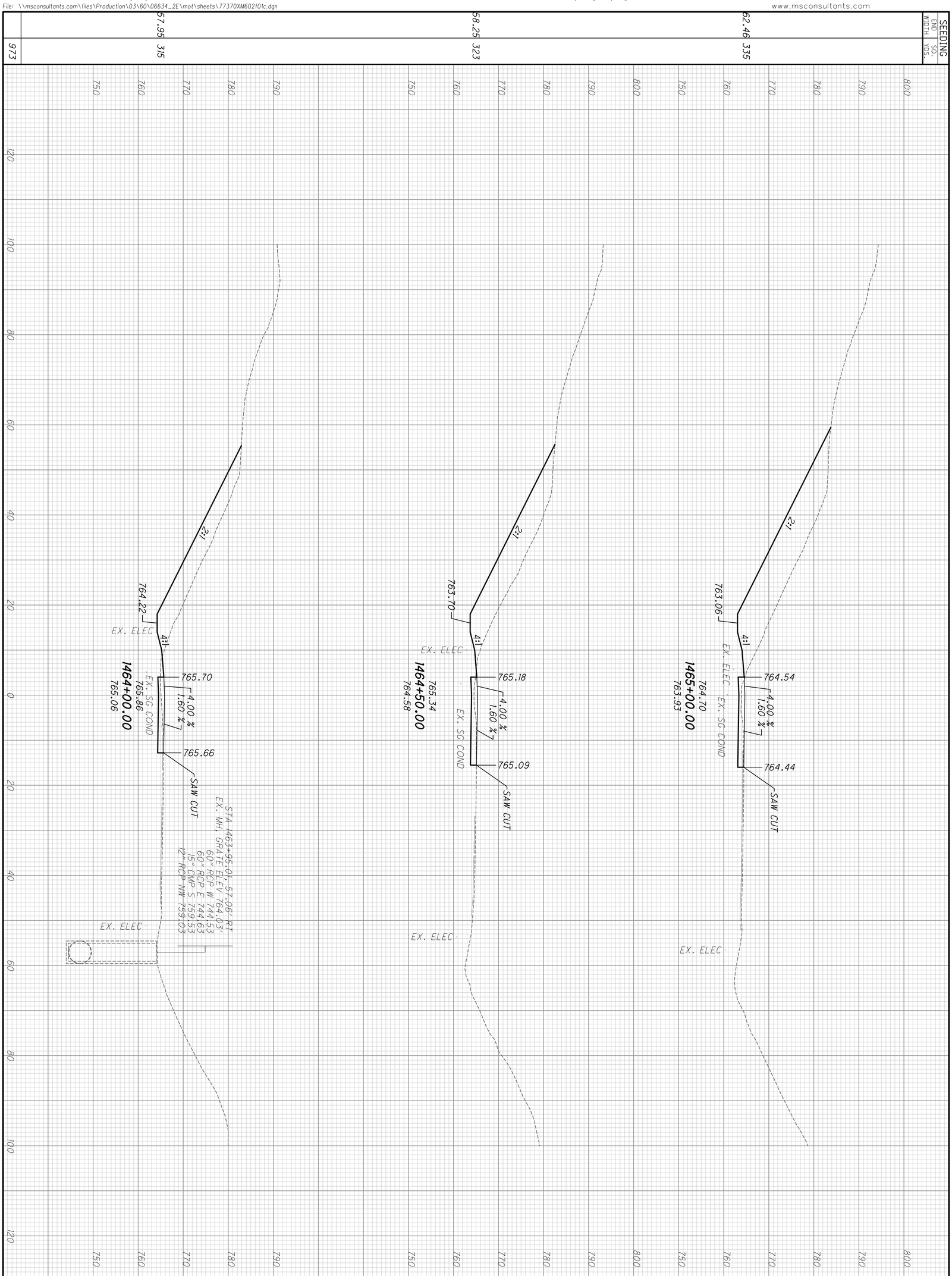

END AREA CUT	END AREA FILL	VOLUME CUT	VOLUME FILL
696	168	227	315
2	2	0	0
1155	289	365	501
6	4	2	0

406
2317

FRA-70-14.54

MOT - CROSS SECTIONS - TR-2F (TEMP I-70 EB TO 18TH ST.)
STA. 1464+00 TO 1465+00

CALCULATED

CHECKED

ms consultants, inc.

34" x 22"
Model: Sheet View: FENCE_VIEW1
Printed: 9/28/2018 @ 10:22:35 AM By: kryan
File: \\msconsultants.com\files\Production\03\60\06634_2E\mot\sheets\77370XM602101d.dgn
Batchplot Spec: \\msconsultants.com\files\production\03\60\06634_2E\standards\plotdrv\batchplt.spc
Pen Table: S:\std\plotting\ustn\V8i\pen\V8i_ms_std.tbl
Plot Driver: \\msconsultants.com\files\Standards\ustn\ohdot\v8i\ms\plotting\PDF.pltcfg
0 0.5" 1"
DGF: ohdotV8i
PCF: 60-06634_2E_Columbus
Ohio DOT Workspace
70\71 East Interchange 2E
PLOT.CEL
ms consultants, inc.
msconsultants.com
www.msconsultants.com

SEEDING		
	END WIDTH	SQ. YDS.
1101	65.29	355
	67.16	368
	68.86	378

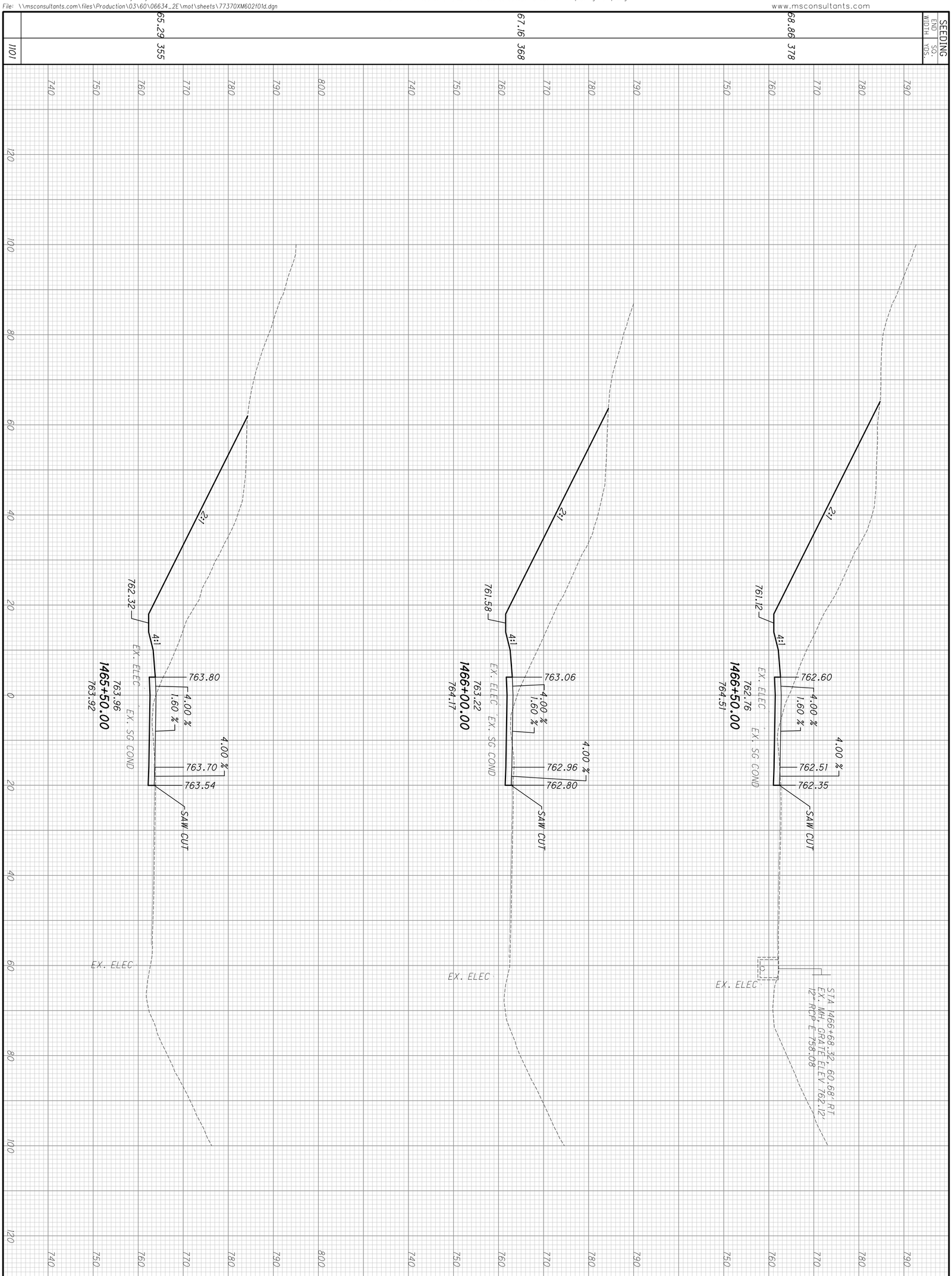

END AREA		
	CUT	FILL
1419	416	0
0	0	0
2462	677	839
0	0	0

VOLUME		
	CUT	FILL
1419	531	0
0	0	0
2462	946	0
0	0	0

407 / 2317	FRA-70-14.54	MOT - CROSS SECTIONS - TR-2F (TEMP I-70 EB TO 18TH ST.) STA. 1466+25.95 TO STA. 1466+50	CALCULATED / CHECKED

ms consultants, inc.

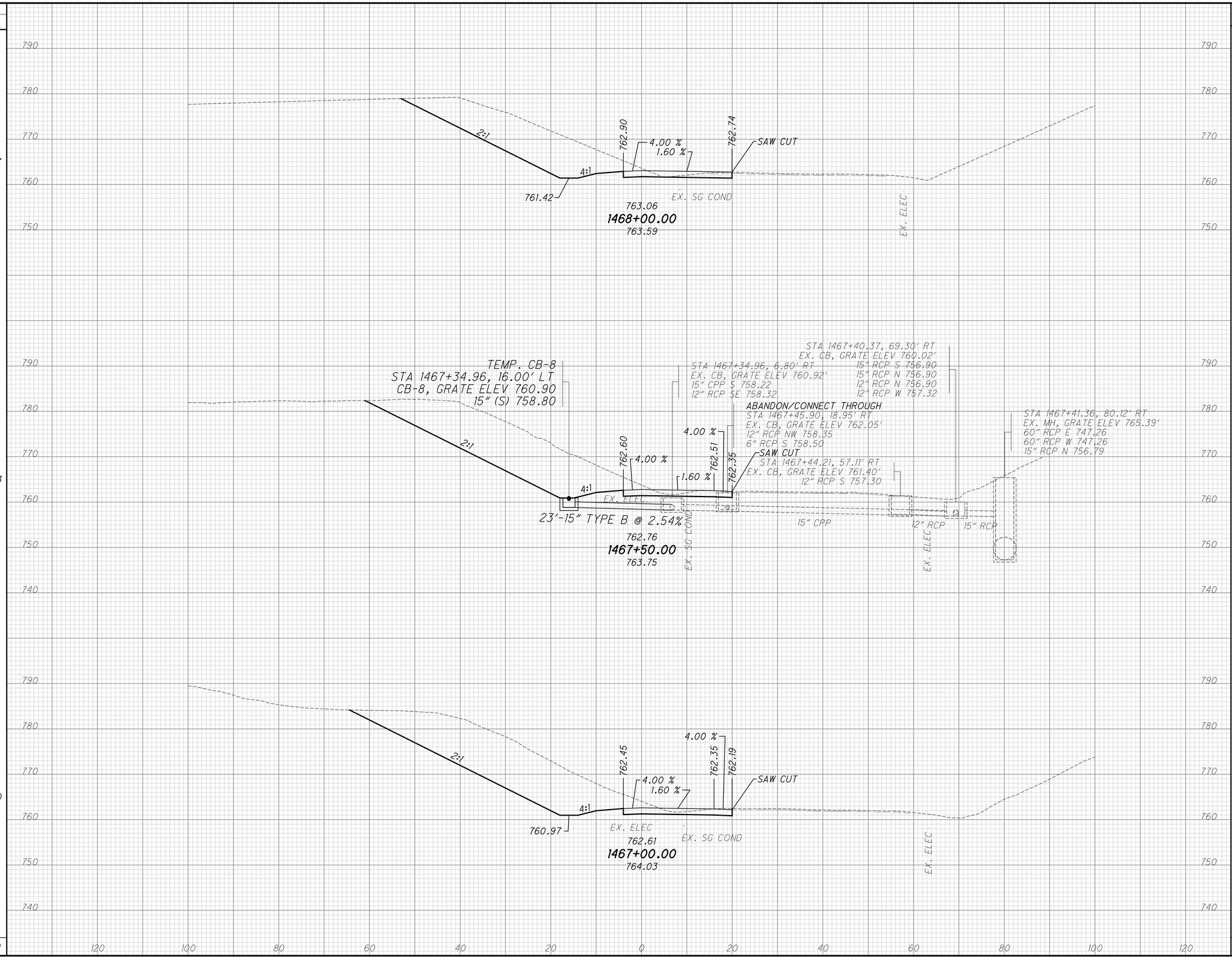

END AREA CUT	END AREA FILL	VOLUME CUT	VOLUME FILL
340	0	757	0
478	0	919	0
515	0	969	0
1315	1	2645	0

CALCULATED

CHECKED

MOT - CROSS SECTIONS - TR-2F (TEMP I-70 EB TO 18TH ST.)
STA. 1467+00 TO STA. 1468+00

FRA-70-14.54

408
2317

ms consultants, inc.

PLOT.CEL

ms consultants, inc.
msconsultants.com

Ohio DOT Workspace
70\71 East Interchange 2E
www.msconsultants.com

UCF: ohdotV8i
PCF: 60-06634_2E_Columbus

Batchplot Spec: \\msconsultants.com\files\production\03\60\06634_2E\standards\plotdrv\batchplt.spc
Pen Table: S:\std\plotting\ustn\V8i\pen\V8i_ms_std.tbl
Plot Driver: \\msconsultants.com\files\Standards\ustn\ohdot\v8i\ms\plotting\PDF.pltcfg

34" x 22"

View: FENCE_VIEW1
By: kryan

Model: Sheet
Printed: 9/28/2018 @ 10:22:36 AM
File: \\msconsultants.com\files\Production\03\60\06634_2E\mot\sheets\77370XM602101e.dgn

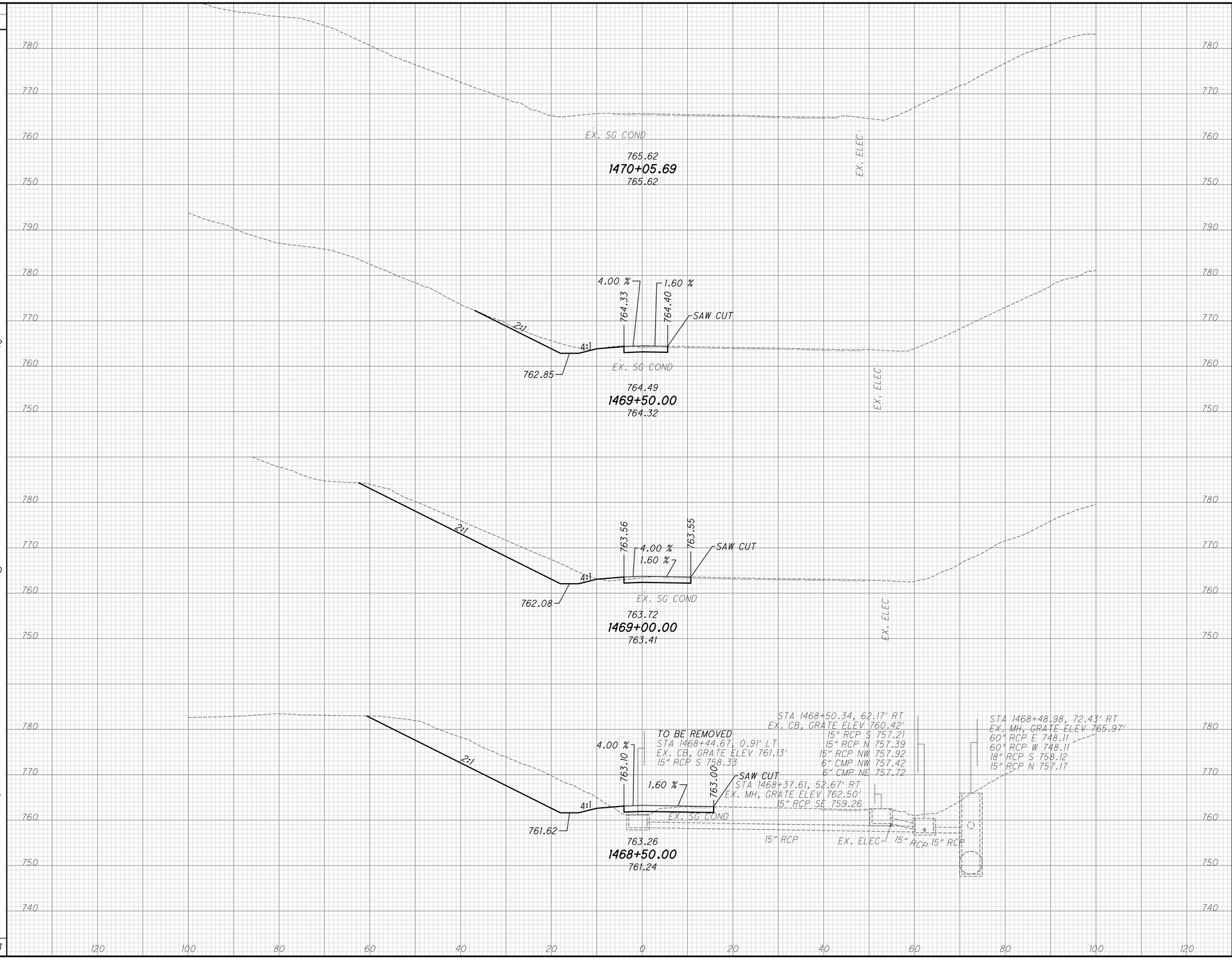

SEEDING END WIDTH	SEEDING SQ. YDS.	END AREA CUT	END AREA FILL	VOLUME CUT	VOLUME FILL
39.23	292	38	0	184	2
65.83	360	161	3	403	8
63.87	331	275	6	569	6
	983	465	11	1156	16

CALCULATED

CHECKED

MOT - CROSS SECTIONS - TR-2F (TEMP I-70 EB TO 18TH ST.)

STA. 1468+00.00 TO 1470+05.69

FRA-40-14.54

409
2317

ms consultants, inc.

PLOT.CEL

ms consultants, inc.
msconsultants.com

Ohio DOT Workspace
70\71 East Interchange 2E
www.msconsultants.com

UCF: ohdot\V8i
PCF: 60-06634_2E_Columbus

Batchplot Spec: \\msconsultants.com\files\production\03\60\06634_2E\standards\plotdrv\batchplt.spc
Pen Table: S:\std\plotting\ustn\V8i\pen\V8i_ms_std.tbl
Plot Driver: \\msconsultants.com\files\Standards\ustn\ohdot\v8i\ms\plotting\PDF.pltcfg

34" x 22"

View: FENCE_VIEW1
By: kryan

Model: Sheet
Printed: 9/28/2018 @ 10:22:38 AM
File: \\msconsultants.com\files\Production\03\60\06634_2E\mot\sheets\77370XM602101f.dgn

SUPERELEVATION TABLE

P.I. Station 1467+14.07 | Dc = 3° 46' 45.86"

LEFT SIDE					CENTERLINE CONTROL		RIGHT SIDE					REMARKS
EDGE ELEVATION	TRANSITION RATE	ELEVATION CORRECTION	CROSS SLOPE	WIDTH	STATION	PROFILE GRADE	WIDTH	CROSS SLOPE	ELEVATION CORRECTION	TRANSITION RATE	EDGE ELEVATION	
					1460+47.77	767.39	0.00	-1.60%	0.00	*	767.39	
					1460+50.00	767.38	0.07	-1.60%	0.00	*	767.38	
					1460+75.00	767.35	0.80	-1.60%	-0.01	*	767.34	
					1461+00.00	767.31	1.54	-1.60%	-0.02	*	767.29	
					1461+25.00	767.30	2.28	-1.60%	-0.04	*	767.26	
					1461+50.00	767.30	3.03	-1.60%	-0.05	*	767.25	
					1461+75.00	767.20	3.84	-1.60%	-0.06	*	767.14	
					1462+00.00	767.11	4.73	-1.60%	-0.08	*	767.03	
					1462+25.00	767.07	5.72	-1.60%	-0.09	*	766.98	
					1462+50.00	766.99	6.71	-1.60%	-0.11	*	766.88	
					1462+75.00	766.84	7.71	-1.60%	-0.12	*	766.72	
					1463+00.00	766.64	8.71	-1.60%	-0.14	*	766.50	
					1463+25.00	766.45	9.73	-1.60%	-0.16	*	766.29	
					1463+50.00	766.25	10.76	-1.60%	-0.17	*	766.08	
					1463+75.00	766.06	11.78	-1.60%	-0.19	*	765.87	
					1464+00.00	765.86	12.80	-1.60%	-0.20	*	765.66	
					1464+25.00	765.63	14.16	-1.60%	-0.23	*	765.40	
					1464+50.00	765.34	15.53	-1.60%	-0.25	*	765.09	
					1464+75.00	765.02	16.00	-1.60%	-0.26	*	764.76	
					1465+00.00	764.70	16.00	-1.60%	-0.26	*	764.44	
					1465+25.00	764.33	16.00	-1.60%	-0.26	*	764.07	
					1465+50.00	763.96	16.00	-1.60%	-0.26	*	763.70	
					1465+75.00	763.59	16.00	-1.60%	-0.26	*	763.33	
					1466+00.00	763.22	16.00	-1.60%	-0.26	*	762.96	
					1466+25.00	762.96	16.00	-1.60%	-0.26	*	762.70	
					1466+50.00	762.76	16.00	-1.60%	-0.26	*	762.50	
					1466+75.00	762.65	16.00	-1.60%	-0.26	*	762.39	
					1467+00.00	762.61	16.00	-1.60%	-0.26	*	762.35	
					1467+25.00	762.65	16.00	-1.60%	-0.26	*	762.39	
					1467+50.00	762.76	16.00	-1.60%	-0.26	*	762.50	
					1467+75.00	762.91	16.00	-1.60%	-0.26	*	762.65	
					1468+00.00	763.06	19.96	-1.60%	-0.32	*	762.74	
					1468+25.00	763.14	17.89	-1.60%	-0.29	*	762.85	
					1468+50.00	763.26	15.75	-1.60%	-0.25	*	763.01	
					1468+75.00	763.45	13.31	-1.60%	-0.21	*	763.24	
					1469+00.00	763.72	10.73	-1.60%	-0.17	*	763.55	
					1469+25.00	764.06	8.15	-1.60%	-0.13	*	763.93	
					1469+50.00	764.49	5.62	-1.60%	-0.09	*	764.40	
					1469+75.00	764.99	3.10	-1.60%	-0.05	*	764.94	
					1470+00.00	765.52	0.57	-1.60%	-0.01	*	765.51	
					1470+05.69	765.62	0.00	-1.60%	0.00	*	765.62	

* CROSS SLOPE BASED UPON EXISTING PAVEMENT WHICH IS BEING WIDENED

SUPERELEVATION TABLE

LEFT SIDE					CENTERLINE CONTROL		RIGHT SIDE					REMARKS
EDGE ELEVATION	TRANSITION RATE	ELEVATION CORRECTION	CROSS SLOPE	WIDTH	STATION	PROFILE GRADE	WIDTH	CROSS SLOPE	ELEVATION CORRECTION	TRANSITION RATE	EDGE ELEVATION	

CALCULATED | CHECKED

MOT - SUPERELEVATION TABLE TR-2F
(TEMP I-70 EB EXIT TO 18TH ST.)

FRA-70-14.54

410
2317

Printed: 9/28/2018 @ 10:22:46 AM By: kryan
File: \\vmsconsultants.com\Files\Production\023\60\066534_2E\mot\sheets\773710ME6021.dgn
Pen Table: \\vmsconsultants.com\Files\Standards\ustn.ohdot\V8i\ms\plotting\pen\V8i_ms_std.tbl
Plot Driver: \\vmsconsultants.com\Files\Standards\ustn.ohdot\v8i\ms\plotting\PDF.pltcfg

PLOT.CEL

ms consultants, inc.
msconsultants.com

Ohio DOT Workspace
70\71 East Interchange 2E
www.msconsultants.com

Batchplot Spec: \\msconsultants.com\files\production\03\60\06634_2E\standards\plotdrv\batchplt.spc
Pen Table: \\msconsultants.com\files\Standards\ustn\ohdot\V8i\ms\plotting\pen\V8i_ms_std.tbl
Plot Driver: \\msconsultants.com\files\Standards\ustn\ohdot\v8i\ms\plotting\PDF.pltcfg

34" x 22"

Model: Sheet
Printed: 9/28/2018 @ 10:23:24 AM
File: N:\03\60\06634_2E\mot\sheets\105322MB3001.dgn
View: FENCE_VIEW1
By: kryan

LEGEND

WORK AREA	TEMPORARY PAVEMENT PLACED DURING THIS PHASE
ROADWAY CLOSED DURING THIS PHASE	TEMPORARY PAVEMENT PLACED PRIOR TO THIS PHASE
ROADWAY CLOSED PRIOR TO THIS PHASE	I-6 RETAINING WALL

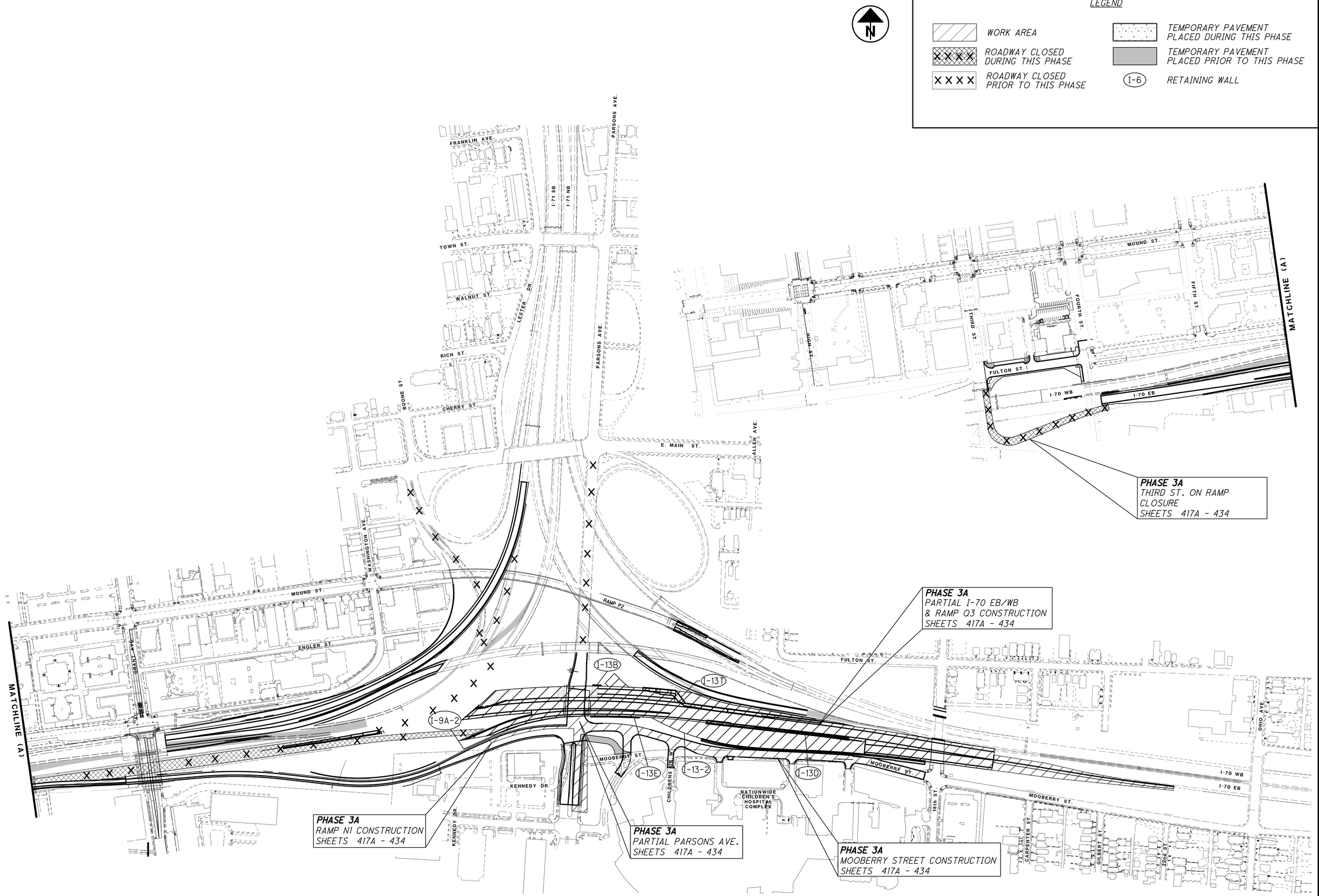

CALCULATED JAH
CHECKED JML

MAINTENANCE OF TRAFFIC - PHASE 3 SCHEMATIC

FRA-70-14.54

ms consultants, inc.

PLOT.CEL

ms consultants, inc.
msconsultants.com

www.msconsultants.com

Ohio DOT Workspace
70\71 East Interchange 2E

1"
0.5"
0

PCF: 60-06634_2E_Columbus
DCF: ohdot\V8i

Batchplot Spec: \\msconsultants.com\files\production\Q3\60\06634_2E\standards\plotdrv\batchplt.spc
Pen Table: N:\Q3\60\06634_2E\standards\tables\V8i_ms_std_NoClouds.tbl
Plot Driver: \\msconsultants.com\files\Standards\usm\ohdot\v8i\ms\plotting\PDF.pltcfg

34" x 22"

Model: Sheet
Printed: 2/12/2019 @ 2:20:38 PM View: FENCE_VIEW1
File: N:\Q3\60\06634_2E\mot\sheets\105228MN3001.dgn By: hbrendinger

CALCULATED JAH
CHECKED JML

PHASE 3 SEQUENCE OF CONSTRUCTION

PHASE 3A (SHEETS 417A - 434)

1) PERMANENTLY CLOSE THE THIRD STREET ON-RAMP AND CONSTRUCT THE SECOND LEFT TURN LANE ON THIRD STREET AT LIVINGSTON AVENUE USING OFF-PEAK SINGLE LANE CLOSURES.

2) SWITCH 18TH STREET RAMP TRAFFIC ONTO RAMP N1. SWITCH MOOBERRY STREET TRAFFIC AND RAMP N1 TRAFFIC ONTO TR-2G. CONSTRUCT ALL UNDERGROUND UTILITIES ON MOOBERRY STREET AND PARSONS AVENUE SOUTH OF MOOBERRY STREET. UTILITY WORK SHALL INCLUDE, BUT IS NOT LIMITED TO: STORM AND SANITARY SEWERS, WATER LINES, UNDERGROUND ELECTRIC CONDUIT AND CONDUITS FOR LIGHTING/TRAFFIC SIGNALS. THE CONTRACTOR SHALL UTILIZE ONE-LANE, TWO-WAY TRAFFIC OPERATION BY USE OF FLAGGER/LEO DURING WORKING HOURS WHILE TRENCHING AND INSTALLING UTILITIES WITHIN THE ROADWAY. DURING NON-WORKING HOURS, ALL TRENCHES AND EXCAVATIONS SHALL BE ADEQUATELY PROTECTED OR BACKFILLED AND ALL ROADWAYS REOPENED TO TWO LANE, TWO-WAY TRAFFIC. IF SANITARY AND STORM SEWER WORK ON MOOBERRY STREET DOES NOT ALLOW FOR A SINGLE LANE OF TRAFFIC, CLOSE MOOBERRY STREET TO THROUGH TRAFFIC AND DETOUR LOCAL TRAFFIC VIA THE WEST TRUCK DRIVE AND S. 17TH STREET. MAINTAIN ACCESS TO ALL NATIONWIDE CHILDREN'S HOSPITAL DRIVEWAYS, GARAGES, LOADING DOCKS AND PARKING LOTS AT ALL TIMES.

3) REDUCE MOOBERRY STREET TO ONE-WAY EB TRAFFIC BETWEEN THE WEST TRUCK ACCESS DRIVE AND 18TH STREET. MOOBERRY STREET SHALL HAVE TWO-LANE, TWO-WAY TRAFFIC MAINTAINED BETWEEN PARSONS AVENUE AND THE WEST TRUCK ACCESS DRIVE AT STA. 894+65.

4) CONSTRUCT I-70 EB FROM A POINT 400' WEST OF PARSONS AVENUE TO THE EAST PROJECT LIMIT. CONSTRUCT I-70 WB FROM APPROXIMATELY 350' WEST OF PARSONS AVENUE TO APPROXIMATELY 600' EAST OF PARSONS AVENUE. CONSTRUCT RAMP Q3 FROM JUST SOUTHEAST OF THE EXISTING WB FLYOVER BRIDGE AND PARSONS AVENUE TO THE EAST PROJECT LIMIT. CONSTRUCT RAMP N3 FROM STA. 882+50 TO ITS TERMINAL WITH I-70 EB.

5) CONSTRUCT THE I-70 BRIDGES OVER PARSONS AVENUE (FRA-70-14.93 L/R) AND I-70 OVER RAMP Q3 (FRA-70-14.98 L/R). BUILD RETAINING WALLS I-13-2, I-13A, I-13B, I-13D, AND I-13E. CONSTRUCT THE REMAINDER OF WALL I-9A-2.

6) UPON COMPLETION OF WALL I-9A-2, CONSTRUCT THE REMAINING NORTH PORTION OF RAMP N1, AND THE NEW REALIGNMENT OF MOOBERRY STREET INCLUDING THE INTERSECTION WITH PARSONS AVENUE. NO DRIVE TO CHILDREN'S HOSPITAL PROPERTY SHALL BE CLOSED AT ANY TIME DURING CONSTRUCTION, UNLESS OTHERWISE NOTED IN THE PLAN. CONSTRUCT THE ACCESS DRIVES TO THE CHILDREN'S HOSPITAL PROPERTY ALONG MOOBERRY STREET AND AMBULANCE DRIVE IN HALF-WIDTH CONSTRUCTION MAINTAINING TWO-WAY TRAFFIC AT ALL TIMES ON THESE DRIVES. CHILDREN'S DRIVE IS PERMITTED TO BE CLOSED FOR TWO (2) WEEKS FOR CONSTRUCTION.

7) PRIOR TO OPENING MOOBERRY STREET TO TWO-WAY TRAFFIC, ALL PERMANENT SIGNING AND PAVEMENT MARKINGS SHALL BE INSTALLED AS PER THE FINAL TRAFFIC CONTROL PLAN UNLESS OTHERWISE NOTED IN THE MAINTENANCE OF TRAFFIC PLANS. UPON COMPLETION OF THIS WORK, MOOBERRY STREET SHALL BE OPEN TO TWO-WAY TRAFFIC BETWEEN PARSONS AVENUE AND 18TH STREET.

PHASE 3 - SEQUENCE OF CONSTRUCTION

FRA-70-14.54

ms consultants, inc.

PLOT.CEL

ms consultants, inc.
msconsultants.com

www.msconsultants.com

Ohio DOT Workspace
70\71 East Interchange 2E

1"
0.5"
0

PDF: ohdot\V8i
PCF: 60-06634_2E_Columbus

Batchplot Spec: \\msconsultants.com\files\production\03\60\06634_2E\standards\ohdot\v8i\batchplt.spc
Pen Table: \\msconsultants.com\files\Standards\usth\ohdot\v8i\ms\plotting\pen\V8i_ms_std.tbl
Plot Driver: \\msconsultants.com\files\Standards\usth\ohdot\v8i\ms\plotting\PDF.pltcfg

Model: Sheet
Printed: 2/13/2019 @ 7:26:15 PM View: FENCE_VIEW1
By: hbrendinger
File: \\msconsultants.com\files\Production\03\60\06634_2E\mot\sheets\105322MN3002.dgn

34" x 22"

PHASE 3 SUMMARY

CONSTRUCTION CRITICAL TO NEXT PHASE

TEMPORARY ROADWAY CONSTRUCTION

PERMANENT RETAINING WALL CONSTRUCTION
- *WALL I-13-2 SOUTH OF RAMP Q3*
- *WALL I-13B NORTH OF I-70 IN Q3/I-70/PARSONS TRIANGLE*
- *WALL I-13D BETWEEN I-70 EB AND RAMP Q3*
- *WALL I-13E BETWEEN RAMP N3 AND MOOBERRY STREET*
- *WALL I-9A-2 BETWEEN RAMP N3 AND RAMP N1*

PERMANENT BRIDGE CONSTRUCTION
- *I-70 EB OVER PARSONS AVENUE (FRA-70-14.93)*

PERMANENT ROADWAY CONSTRUCTION
- *REMAINING PORTION OF RAMP N1*
- *MOOBERRY STREET INCLUDING INTERSECTION WITH PARSONS AVENUE*
- *REMAINING PORTION OF PARSONS AVENUE*
- *I-70 EB FROM ABOUT 400' WEST OF PARSONS AVENUE TO THE EAST PROJECT LIMITS*
- *I-70 WB FROM ABOUT 350' WEST OF PARSONS AVENUE TO 600' EAST OF PARSONS AVENUE*
- *RAMP Q3 FROM JUST SOUTHEAST OF EXISTING FLYOVER BRIDGE TO THE EAST PROJECT LIMITS*
- *RAMP N3 FROM STA. 884+00 TO ITS TERMINAL WITH I-70 EB*

CONSTRUCTION AVAILABLE THIS PHASE

- *I-70 EB FROM WEST PROJECT LIMITS TO ABOUT 400' WEST OF PARSONS AVENUE*
- *I-70 WB FROM WEST PROJECT LIMITS TO ABOUT 350' WEST OF PARSONS AVENUE*
- *RAMP N3 OVER I-70*

CHILDREN'S HOSPITAL ACCESS DURING THIS PHASE

- *GRANT AVENUE OPEN*
- *18TH STREET OPEN*
- *RAMP N1 TO MOOBERRY STREET/PARSONS AVENUE*
- *MOOBERRY STREET SHALL BE CONSTRUCTED IN PART WIDTH, MAINTAINING 2-LANE, 2-WAY TRAFFIC BETWEEN PARSONS AVENUE & THE TRUCK ACCESS DRIVE AND 1-LANE EB BETWEEN THE TRUCK ACCESS DRIVE TO 18TH STREET*

WINDOW CONTRACT TABLE

ACTIVITY	AFFECTED ROADWAY(S)	RESTRICTION TYPE	RESTRICTION TIME	DISINCENTIVE
MOOBERRY ST. CONSTRUCTION	MOOBERRY ST. (WEST TRUCK ACCESS TO 18TH ST.)	WB CLOSURE	60 CALENDAR DAYS	$3,000 PER DAY
MOOBERRY ST. CONSTRUCTION	CHILDREN'S DRIVE	ROAD CLOSURE	14 CALENDAR DAYS	$1,000 PER DAY

NOTE: SEE SHEET 111 FOR DISINCENTIVE AMOUNTS ASSOCIATED WITH ANY MAINLINE ROADWAY OR SYSTEM RAMP OVERNIGHT CLOSURE REQUIRED IN THIS PHASE.

PROPOSED ROADWAY DESCRIPTIONS

ROAD NAME	DESCRIPTION (DIRECTION OF STATIONING)
RAMP Q1	I-71 SB TO I-70 WB
RAMP Q3	I-71 SB TO I-70 EB
RAMP N4	I-70 EB TO I-71 NB
RAMP P4	I-70 WB TO I-71 NB
RAMP P5	I-70 WB TO I-670
RAMP N1	I-70 EB TO PARSONS AVE
RAMP N2	FULTON ST EB (BY WAY OF RAMP N3) TO I-71 NB
RAMP N3	FULTON ST EB TO I-70 EB
RAMP P1	I-70 WB (BY WAY OF RAMP P2) TO PARSONS AVE
RAMP P2	I-70 WB TO MOUND ST WB
RAMP P6	MAIN ST TO I-71 NB/I-670

TEMPORARY ROADWAY DESCRIPTIONS

PLAN VIEW LABEL	DESCRIPTION
TR-1B	TEMP I-70 EB TO I-71 NB
TR-1D	TEMP I-70 EB
TR-2A	TEMP I-70 EB/WB CONNECTION
TR-2D	TEMP I-70 EB TO I-71 NB
TR-2F	TEMP I-70 EB EXIT TO 18TH ST
TR-2G	TEMP MOOBERRY ST CONNECTION

CALCULATED JAH
CHECKED JML

PHASE 3 - SUMMARY & DISINCENTIVE CHART

FRA-70-14.54

416A
2317

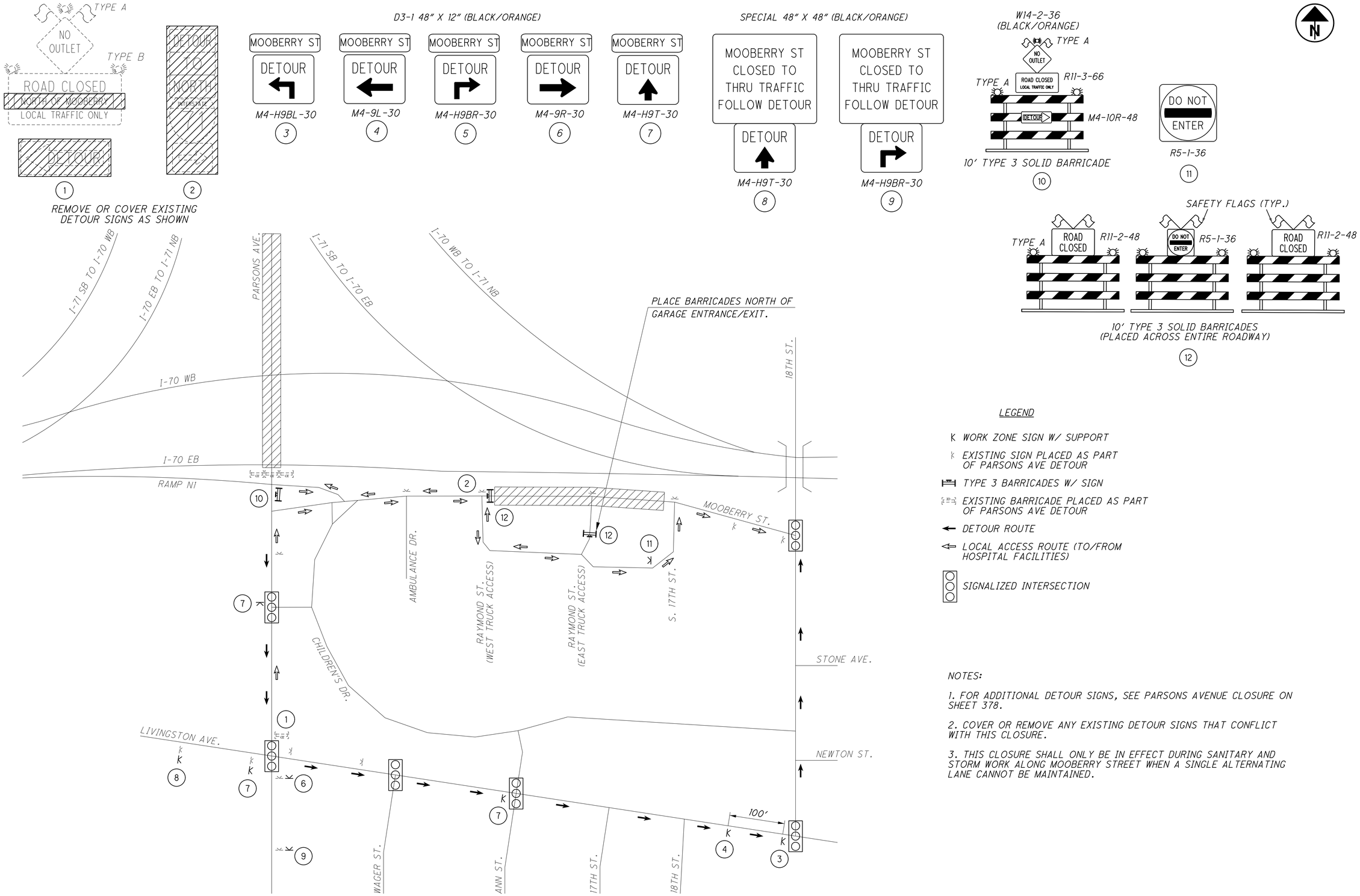

NOTES:

1. FOR ADDITIONAL DETOUR SIGNS, SEE PARSONS AVENUE CLOSURE ON SHEET 378.

2. COVER OR REMOVE ANY EXISTING DETOUR SIGNS THAT CONFLICT WITH THIS CLOSURE.

3. THIS CLOSURE SHALL ONLY BE IN EFFECT DURING SANITARY AND STORM WORK ALONG MOOBERRY STREET WHEN A SINGLE ALTERNATING LANE CANNOT BE MAINTAINED.

CALCULATED JAR
CHECKED JML

PHASE 3A - MOOBERRY ST. CLOSURE

FRA-70-14.54

PLOT.CEL
ms consultants, inc.
msconsultants.com
Ohio DOT Workspace
70\71 East Interchange 2E
www.msconsultants.com
Batchplot Spec: \\msconsultants.com\files\production\03\60\06634_2E\standards\plotdrv\batchplt.spc
Pen Table: \\msconsultants.com\files\Production\03\60\06634_2E\standards\tables\V8i_ms_sdf_No_Colors.tbl
Plot Driver: \\msconsultants.com\files\Standards\ustn\ohdot\v8i\ms\plotting\PDF.pltcfg
34" x 22"
Model: Sheet
Printed: 2/12/2019 @ 2:20:40 PM
File: \\msconsultants.com\files\Production\03\60\06634_2E\mot\sheets\105322MD3003.dgn
View: FENCE_VIEW1
By: hbrendlinger
ms consultants, inc.

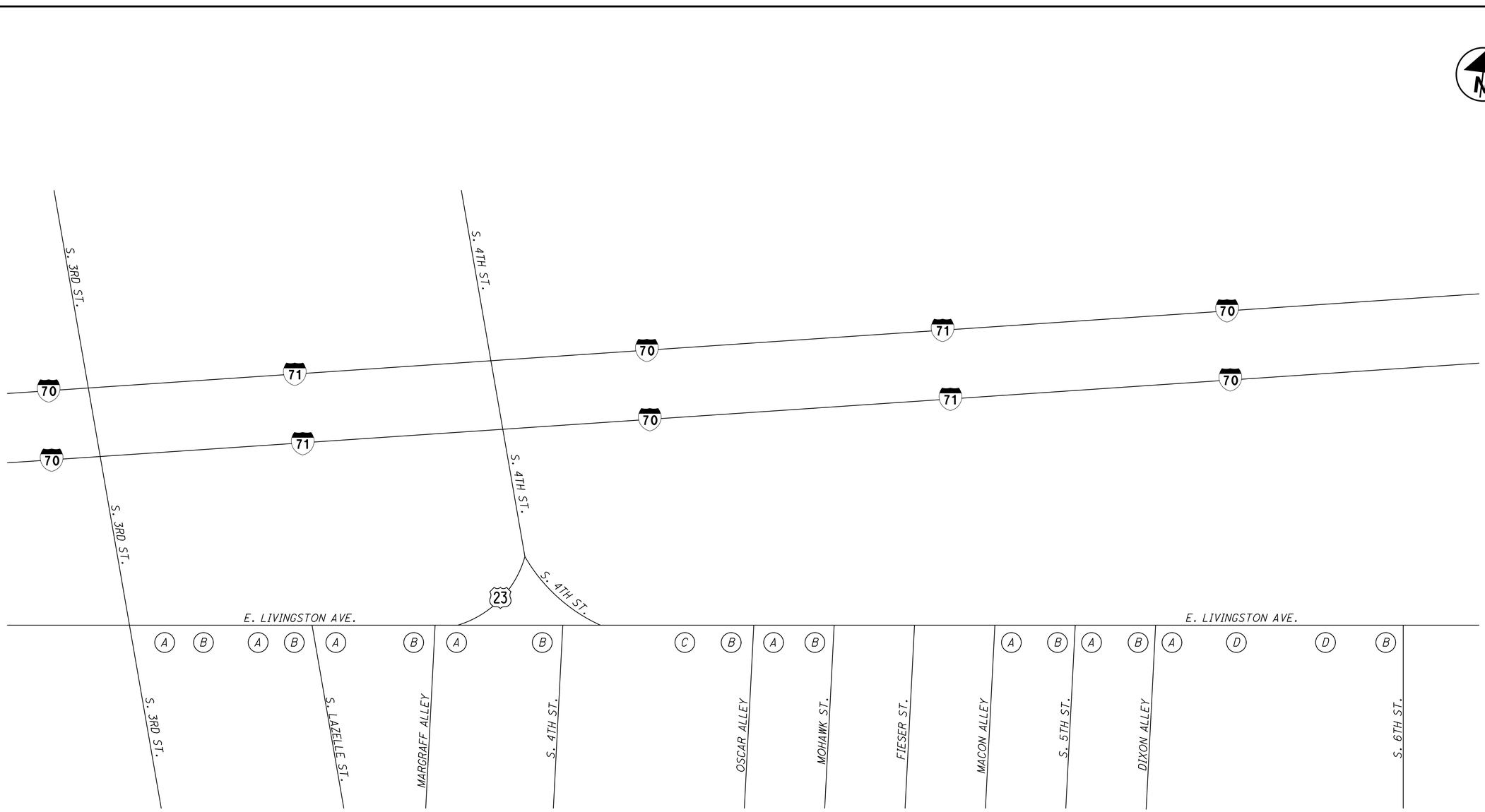

NOTES:

1. INSTALL THE PARKING RESTRICTION SIGNS UPON COMPLETION OF THE ADDED LEFT TURN LANE ON THIRD ST. AT LIVINGSTON AVE.

2. REMOVE THE SIGNS AND RESTORE THE EXISTING SIGNS WHEN RAMP N2 IS OPEN AND PROVIDES ACCESS FROM FULTON ST. TO I-70 EB. SEE PHASE 4B - STEP 2.

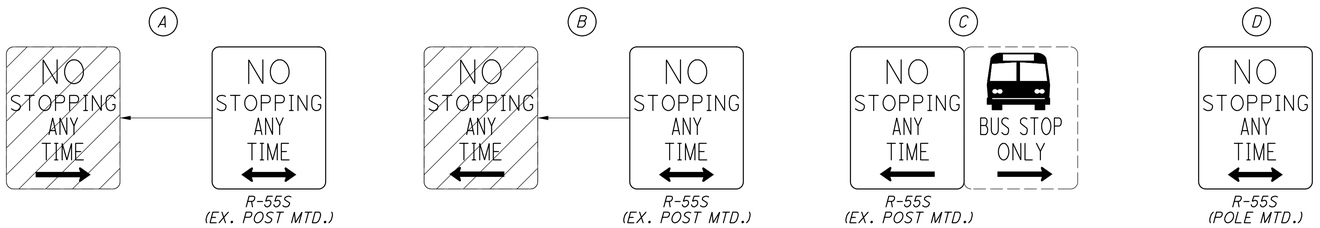

CALCULATED MSN
CHECKED JML

MAINTENANCE OF TRAFFIC - PHASE 3A
LIVINGSTON AVE. PARKING RESTRICTIONS

FRA-70-14.54

417A
2317

ms consultants, inc.

PLOT.CEL

ms consultants, inc.
msconsultants.com

Ohio DOT Workspace
70\71 East Interchange 2E
www.msconsultants.com

Batchplot Spec: \\msconsultants.com\files\production\03\60\06634_2E\standards\plotdrv\batchplt.spc
Pen Table: \\msconsultants.com\files\Standards\ustn\ohdot\V8i\ms\plotting\pen\V8i_ms_std.tbl
Plot Driver: \\msconsultants.com\files\Standards\ustn\ohdot\v8i\ms\plotting\PDF.pltcfg

PCF: ohdotV8i
PCF: 60-06634_2E_Columbus

34" x 22"

View: FENCE_VIEW1
By: kryan
File: \\msconsultants.com\files\Production\03\60\06634_2E\mot\sheets\105322MP1070.dgn

Model: Sheet
Printed: 9/28/2018 @ 10:23:30 AM

PLOT.CEL

ms consultants, inc.
msconsultants.com

www.msconsultants.com

Ohio DOT Workspace
70\71 East Interchange 2E

0 0.5" 1"

PDF: ohdot\V8i
WCF: 60-06634_2E_Columbus

Batchplot Spec: \\msconsultants.com\files\Production\Q3\60\06634_2E\standards\plotdir\batchplt.spc
Pen Table: \\msconsultants.com\files\Standards\ustn\ohdot\V8i\ms\plotting\pen\V8i_ms_std.tbl
Plot Driver: \\msconsultants.com\files\Standards\ustn\ohdot\v8i\ms\plotting\PDF.pltcfg

34" x 22"

View: FENCE_VIEW1
By: kryan

Model: Sheet @ 10:24:00 AM
Printed: 9/28/2018
File: \\msconsultants.com\files\Production\Q3\60\06634_2E\mot\sheets\105322MP3050.dgn

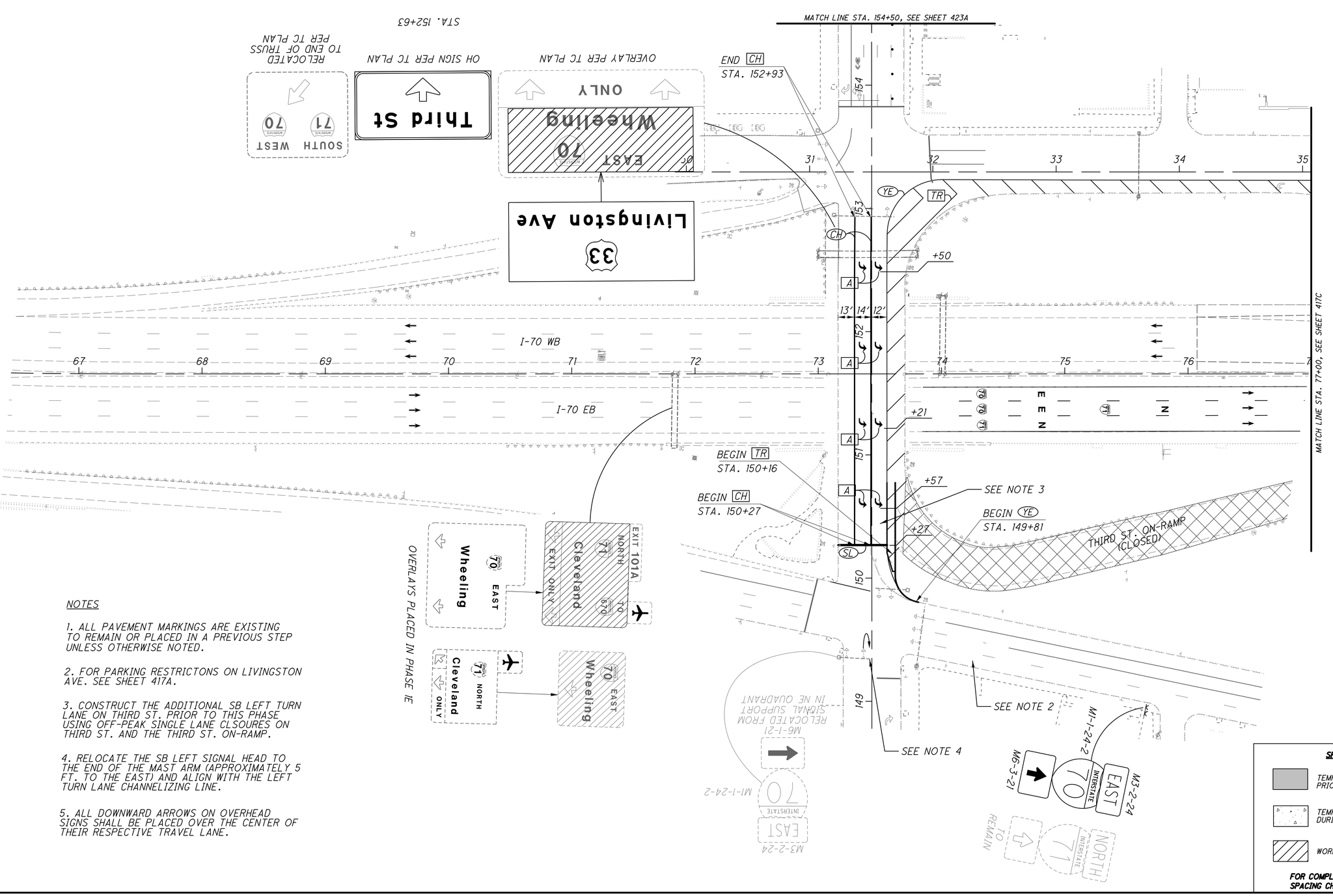

NOTES

1. ALL PAVEMENT MARKINGS ARE EXISTING TO REMAIN OR PLACED IN A PREVIOUS STEP UNLESS OTHERWISE NOTED.

2. FOR PARKING RESTRICTONS ON LIVINGSTON AVE. SEE SHEET 417A.

3. CONSTRUCT THE ADDITIONAL SB LEFT TURN LANE ON THIRD ST. PRIOR TO THIS PHASE USING OFF-PEAK SINGLE LANE CLSOURES ON THIRD ST. AND THE THIRD ST. ON-RAMP.

4. RELOCATE THE SB LEFT SIGNAL HEAD TO THE END OF THE MAST ARM (APPROXIMATELY 5 FT. TO THE EAST) AND ALIGN WITH THE LEFT TURN LANE CHANNELIZING LINE.

5. ALL DOWNWARD ARROWS ON OVERHEAD SIGNS SHALL BE PLACED OVER THE CENTER OF THEIR RESPECTIVE TRAVEL LANE.

OVERLAYS PLACED IN PHASE 1E

SHEET LEGEND

- TEMPORARY PAVEMENT PLACED PRIOR TO THIS PHASE
- TEMPORARY PAVEMENT PLACED DURING THIS PHASE
- WORK AREA

FOR COMPLETE LEGEND AND DRUM SPACING CHART, SEE SHEET 156

HORIZONTAL SCALE IN FEET
0 20 40 80

CALCULATED JAH
CHECKED JML

MAINTENANCE OF TRAFFIC - PHASE 3A
MOOBERRY ST, I-70 EB/WB, & Q3 - STEP 1

FRA-70-14.54

417B
2317

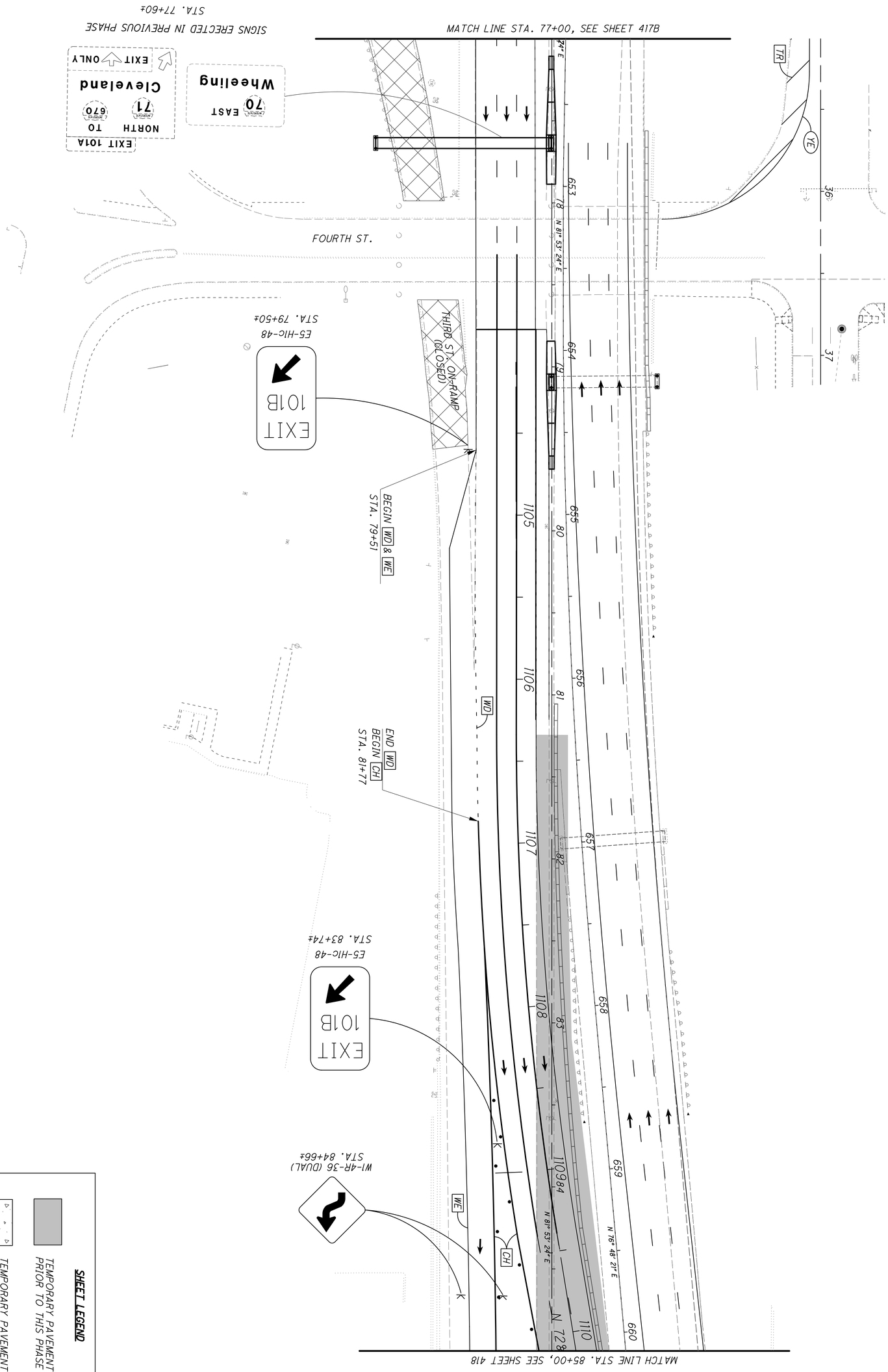

NOTE:
1. ALL PAVEMENT MARKINGS ARE EXISTING TO REMAIN OR PLACED IN PREVIOUS STEP UNLESS OTHERWISE NOTED.

SHEET LEGEND

- TEMPORARY PAVEMENT PLACED PRIOR TO THIS PHASE
- TEMPORARY PAVEMENT PLACED DURING THIS PHASE
- WORK AREA

FOR COMPLETE LEGEND AND DRUM SPACING CHART, SEE SHEET 156

PLOT.CEL

ms consultants, inc.
msconsultants.com

www.msconsultants.com

Ohio DOT Workspace
70\71 East Interchange 2E

0 0.5" 1"

PCF: ohdot\V8i
PCF: 60-06634_2E_Columbus

Batchplot Spec: \\msconsultants.com\files\production\03\60\06634_2E\standards\plotdir\batchplt.spc
Pen Table: \\msconsultants.com\files\Standards\ustn\ohdot\V8i\ms\plotting\pen\V8i_ms_std.tbl
Plot Driver: \\msconsultants.com\files\Standards\ustn\ohdot\v8i\ms\plotting\PDF.pltcfg

Model: Sheet @ 10:24:07 AM View: FENCE_VIEW1
Printed: 9/28/2018 By: kryan
File: \\msconsultants.com\files\Production\03\60\06634_2E\mot\sheets\105322MP3052.dgn

34" x 22"

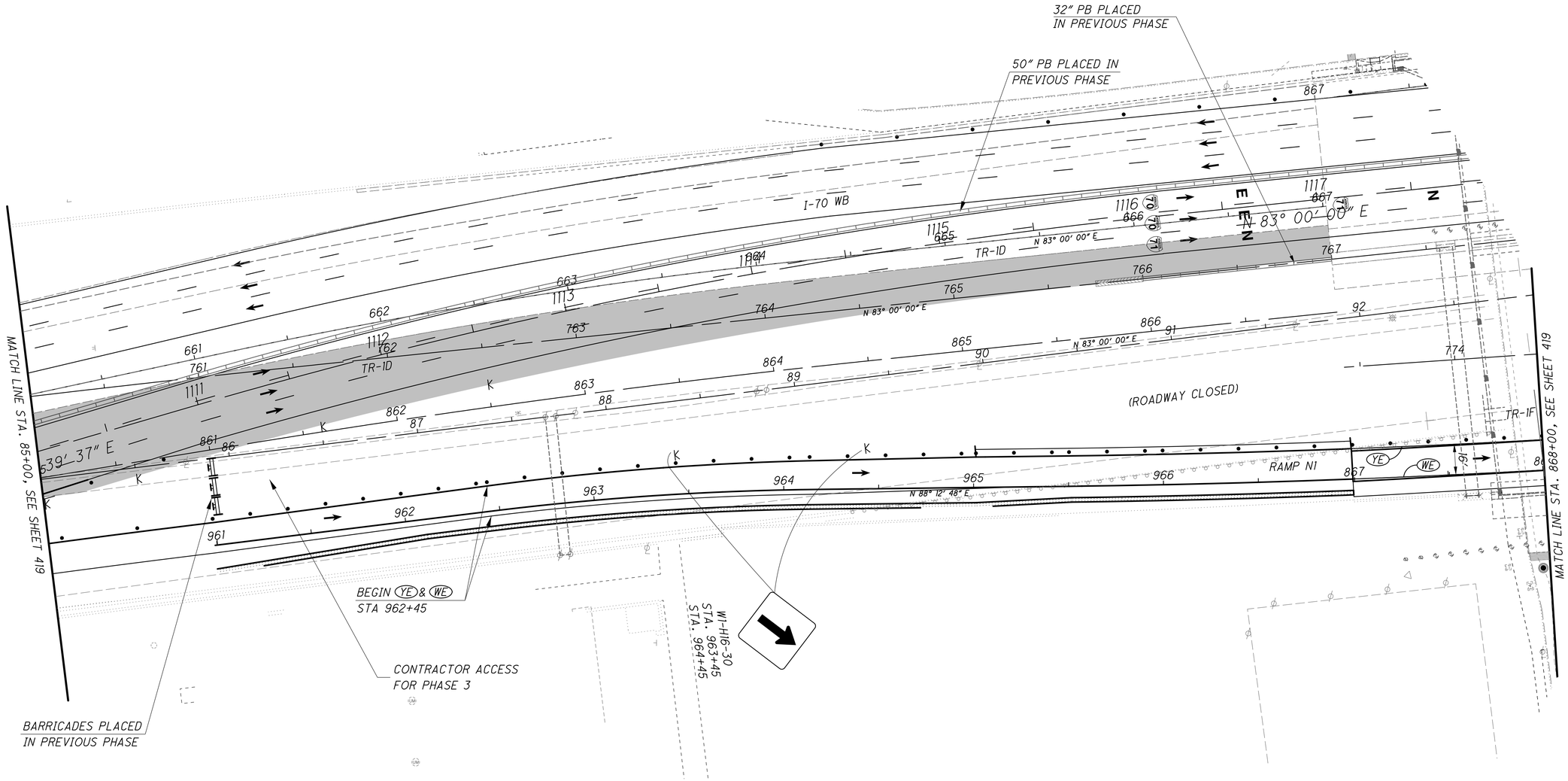

NOTE:

1. ALL PAVEMENT MARKINGS ARE EXISTING TO REMAIN OR PLACED IN PREVIOUS STEP UNLESS OTHERWISE NOTED.

SHEET LEGEND

- TEMPORARY PAVEMENT PLACED PRIOR TO THIS PHASE
- TEMPORARY PAVEMENT PLACED DURING THIS PHASE
- WORK AREA

FOR COMPLETE LEGEND AND DRUM SPACING CHART, SEE SHEET 156

N

0 15 30 60
HORIZONTAL SCALE IN FEET

CALCULATED JAH
CHECKED JML

MAINTENANCE OF TRAFFIC - PHASE 3A
MOOBERRY ST, I-70 EB/WB, & Q3 - STEP 1

FRA-70-14.54

418
2317

PLOT.CEL

ms consultants, inc.
msconsultants.com

www.msconsultants.com

Ohio DOT Workspace
70\71 East Interchange 2E

0 0.5" 1"

Batchplot Spec: \\msconsultants.com\files\production\03\60\06634_2E\standards\plotdrv\batchplt.spc
Pen Table: \\msconsultants.com\files\Standards\usln\ohdot\V8i\ms\plotting\pen\V8i_ms_std.tbl
Plot Driver: \\msconsultants.com\files\Standards\usln\ohdot\v8i\ms\plotting\PDF.pltcfg

CF: ohdotV8i
DCF: 60-06634_2E_Columbus

Model: Sheet
Printed: 9/28/2018 @ 10:24:12 AM
File: N:\03\60\06634_2E\mot\sheets\105329MP3049.dgn

View: FENCE_VIEW1
By: kryan

34" x 22"

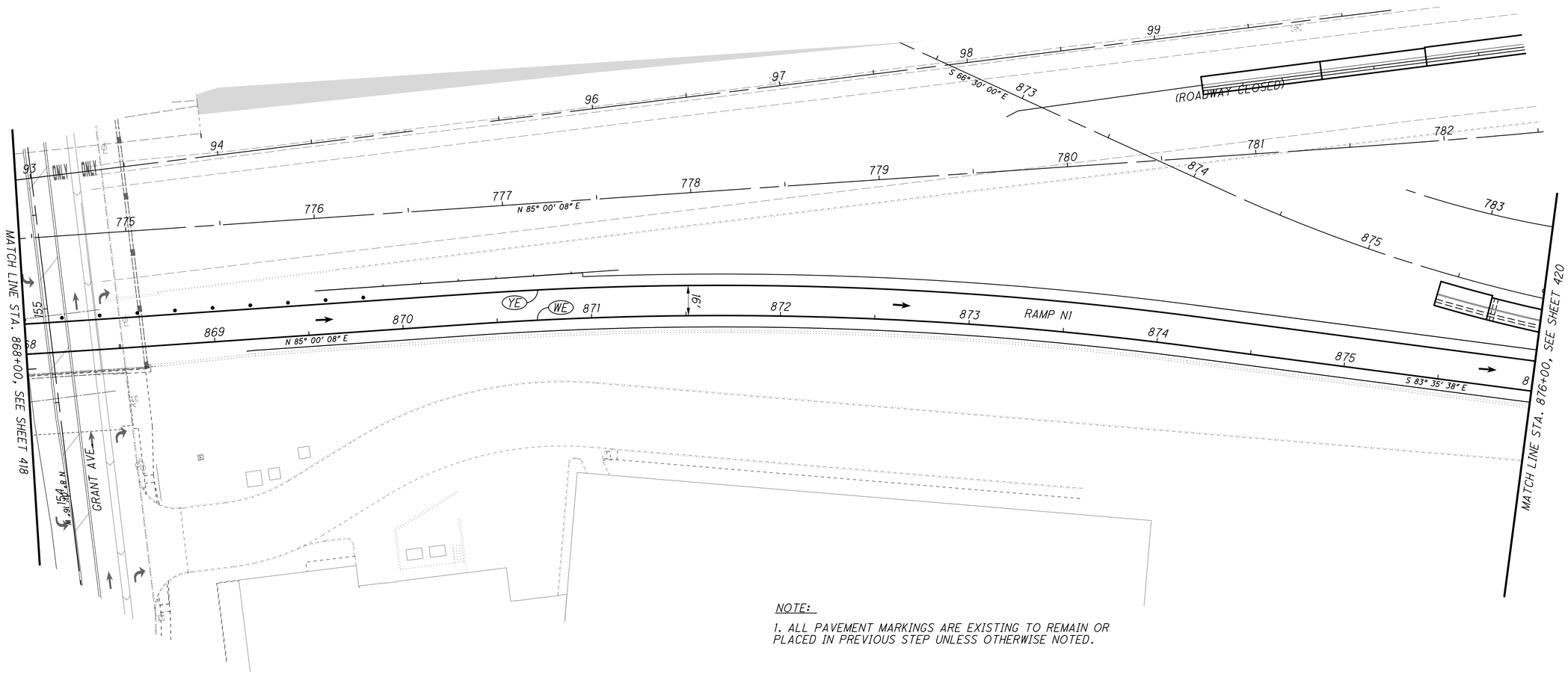

NOTE:

1. ALL PAVEMENT MARKINGS ARE EXISTING TO REMAIN OR PLACED IN PREVIOUS STEP UNLESS OTHERWISE NOTED.

SHEET LEGEND

- TEMPORARY PAVEMENT PLACED PRIOR TO THIS PHASE
- TEMPORARY PAVEMENT PLACED DURING THIS PHASE
- WORK AREA

FOR COMPLETE LEGEND AND DRUM SPACING CHART, SEE SHEET 156

0 15 30 60
HORIZONTAL SCALE IN FEET

CALCULATED JAH
CHECKED JML

MAINTENANCE OF TRAFFIC - PHASE 3A
MOOBERRY ST, I-70 EB/WB, & Q3 - STEP 1

FRA-70-14.54

419
2317

PLOT.CEL

ms consultants, inc.
msconsultants.com

www.msconsultants.com

Ohio DOT Workspace
70\71 East Interchange 2E

1" 0.5" 0

Batchplot Spec: \\msconsultants.com\files\production\03\60\06634_2E\standards\plotdrv\batchplt.spc
Pen Table: \\msconsultants.com\files\Standards\usth\ohdot\V8i\ms\plotting\pen\V8i_ms_std.tbl
Plot Driver: \\msconsultants.com\files\Standards\usth\ohdot\V8i\ms\plotting\PDF.pltcfg
PDF: ohdotV8i
PDF: 60-06634_2E_Columbus

Model: Sheet View: FENCE_VIEW1
Printed: 9/28/2018 @ 10:24:15 AM By: kryan
File: N:\03\60\06634_2E\mot\sheets\105322MP3043.dgn

34" x 22"

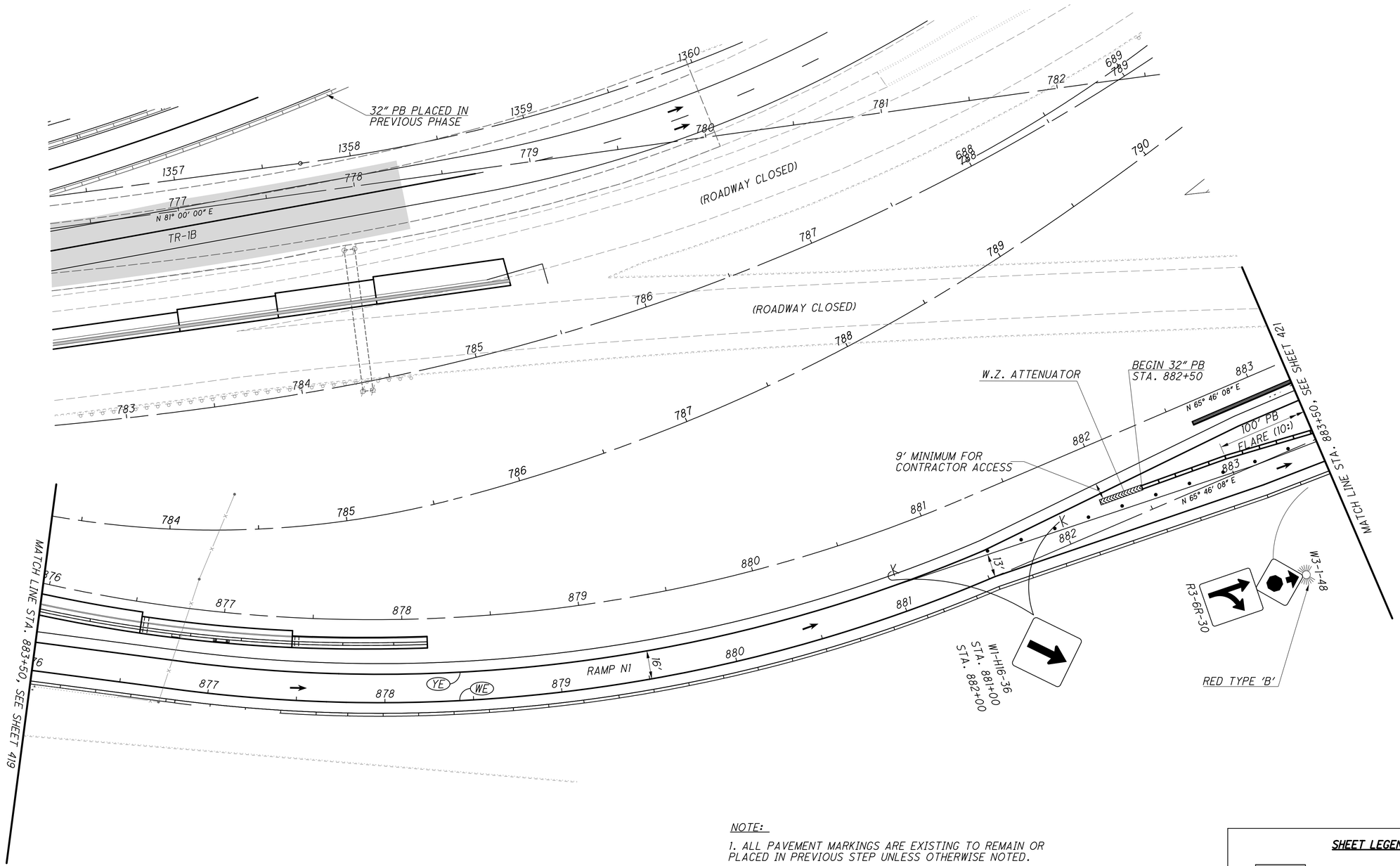

NOTE:

1. ALL PAVEMENT MARKINGS ARE EXISTING TO REMAIN OR PLACED IN PREVIOUS STEP UNLESS OTHERWISE NOTED.

SHEET LEGEND

- TEMPORARY PAVEMENT PLACED PRIOR TO THIS PHASE
- TEMPORARY PAVEMENT PLACED DURING THIS PHASE
- WORK AREA

FOR COMPLETE LEGEND AND DRUM SPACING CHART, SEE SHEET 156

0 15 30 60
HORIZONTAL SCALE IN FEET

CALCULATED JAH
CHECKED JML

TRAFFIC - PHASE 3A
EB/WB, & Q3 - STEP 1
MAINTENANCE OF TRAFFIC
MOOBERRY ST, I-70 EB/WB

FRA-70-14.54

420
2317

ms consultants, inc.

PLOT.CEL

ms consultants, inc.
msconsultants.com

www.msconsultants.com

Ohio DOT Workspace
70\71 East Interchange 2E

PCF: 60-06634_2E_Columbus
ODF: ohdot\v8i

Batchplot Spec: \\msconsultants.com\files\production\03\60\06634_2E\standards\plotdrv\batchplt.spc
Pen Table: N:\03\60\06634_2E\standards\tables\V8i_ms_std_Noclouds.tbl
Plot Driver: \\msconsultants.com\files\Standards\ustn\ohdot\v8i\ms\plotting\PDF.pltcfg

Model: Sheet
Printed: 2/12/2019 @ 9:59:30 AM
File: N:\03\60\06634_2E\mot\sheets\103522MP3035.dgn
View: FENCE_VIEW1
By: awhite

34" x 22"

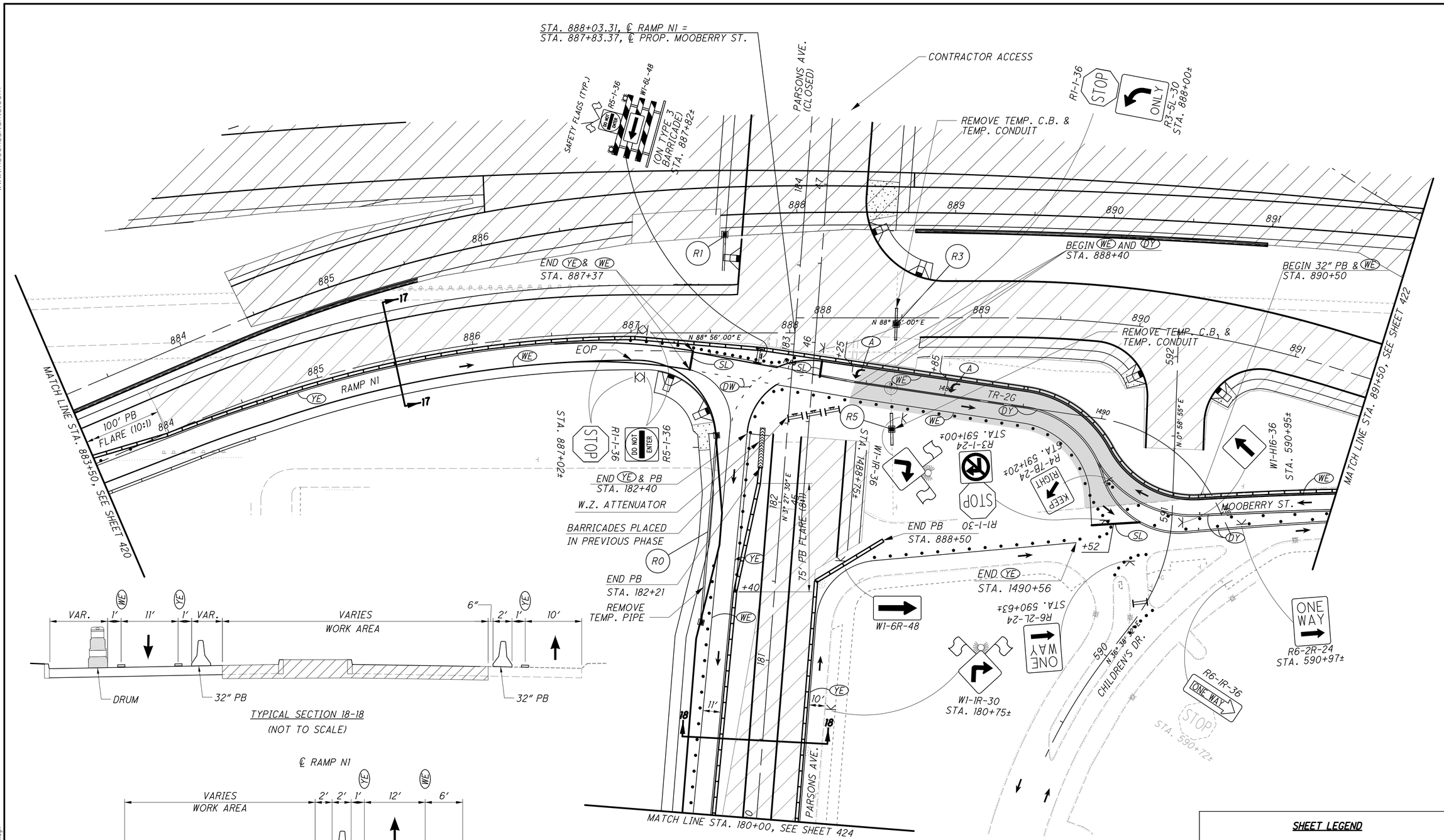

TYPICAL SECTION 18-18
(NOT TO SCALE)

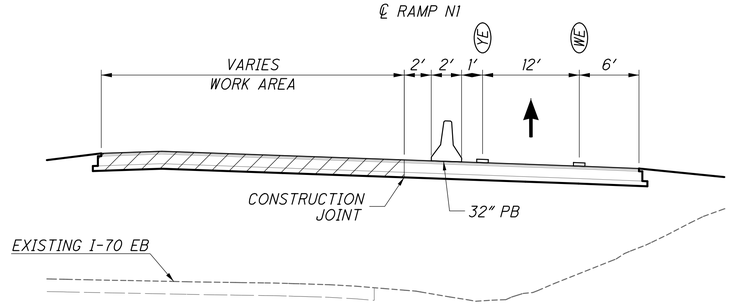

TYPICAL SECTION 17-17
(NOT TO SCALE)

NOTE:

1. ALL PAVEMENT MARKINGS ARE EXISTING TO REMAIN OR PLACED IN PREVIOUS STEP UNLESS OTHERWISE NOTED.
2. SEE SHEETS 427-429 FOR MAINLINE CONSTRUCTION MAINTENANCE OF TRAFFIC OCCURRING SIMULTANEOUSLY.
3. SEE SHEET 378 FOR PARSONS AVENUE DETOUR.

SHEET LEGEND

- TEMPORARY PAVEMENT PLACED PRIOR TO THIS PHASE
- TEMPORARY PAVEMENT PLACED DURING THIS PHASE
- WORK AREA

FOR COMPLETE LEGEND AND DRUM SPACING CHART, SEE SHEET 156

HORIZONTAL SCALE IN FEET
0 15 30 60

CALCULATED JAH
CHECKED JML

MAINTENANCE OF TRAFFIC - PHASE 3A
MOOBERRY ST, I-70 EB/WB, & Q3 - STEP 1

FRA-70-14.54

421
2317

ms consultants, inc.

PLOT.CEL

ms consultants, inc.
msconsultants.com

www.msconsultants.com

Ohio DOT Workspace
70\71 East Interchange 2E

0 0.5" 1"

Batchplot Spec: \\msconsultants.com\files\Production\03\60\06634_2E\standards\plotdrv\batchplt.spc
Pen Table: \\msconsultants.com\files\Production\03\60\06634_2E\standards\plotdrv\EAN\V8i_ms_std.tbl
Plot Driver: \\msconsultants.com\files\Standards\ustn\ohdot\v8i\ms\plotting\PDF.pltcfg

Model: Sheet @ 6:28:27 PM View: FENCE_VIEW1
Printed: 2/26/2019 By: hbrendinger
File: \\msconsultants.com\files\Production\03\60\06634_2E\mel\sheets\105322MP3036.dgn

34" x 22"

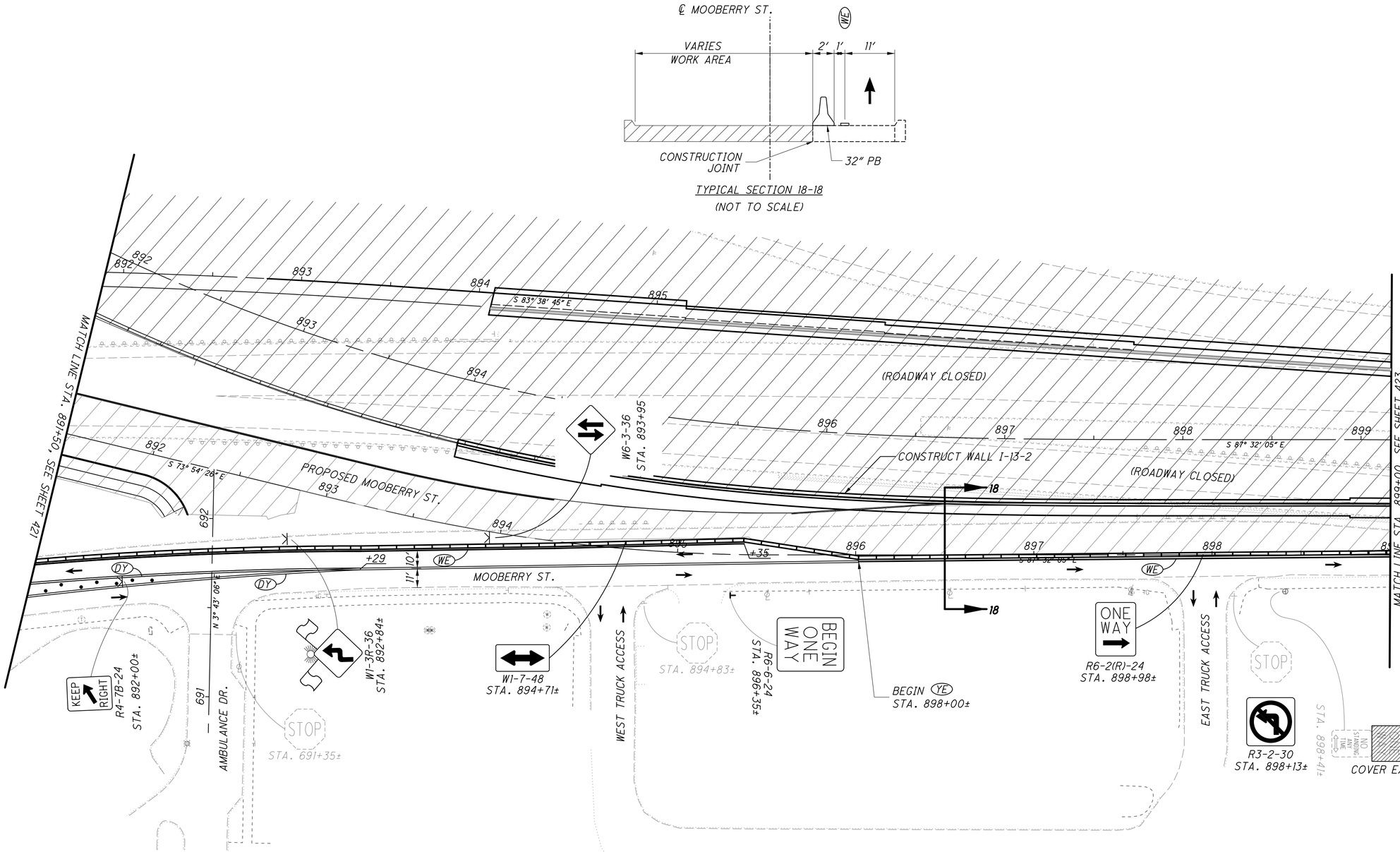

SHEET LEGEND

- TEMPORARY PAVEMENT PLACED PRIOR TO THIS PHASE
- TEMPORARY PAVEMENT PLACED DURING THIS PHASE
- WORK AREA

FOR COMPLETE LEGEND AND DRUM SPACING CHART, SEE SHEET 156

NOTE:

1. ALL PAVEMENT MARKINGS ARE EXISTING TO REMAIN OR PLACED IN PREVIOUS STEP UNLESS OTHERWISE NOTED.

2. SEE SHEETS 427-429 FOR MAINLINE CONSTRUCTION MAINTENANCE OF TRAFFIC OCCURRING SIMULTANEOUSLY.

HORIZONTAL SCALE IN FEET
0 15 30 60

CALCULATED JAH
CHECKED JML

MAINTENANCE OF TRAFFIC - PHASE 3A
MOOBERRY ST, I-70 EB/WB, & Q3 - STEP 1

FRA-70-14.54

422
2317

PLOT.CEL

ms consultants, inc.
msconsultants.com

Batchplot Spec: \\msconsultants.com\Files\production\03\60\06634.2E\standards\plotdrv\batchpl.spc
Pen Table: \\msconsultants.com\Files\Standards\ustn\ohdot\V8i\ms\plotting\pen\V8i_ms_std.tbl
Plot Driver: \\msconsultants.com\Files\Standards\ustn\ohdot\v8i\ms\plotting\PDF.pltcfg
PDF: ohdotV8i
PCF: 60-06634_2E_Columbus

Ohio DOT Workspace
70\71 East Interchange 2E

www.msconsultants.com

0 1" 0.5"

Model: Sheet
Printed: 9/28/2018 @ 10:25:00 AM
File: N:\03\60\06634.2E\mot\sheets\MOT322MP3037.dgn
View: FENCE_VIEW1
By: kryan

34" x 22"

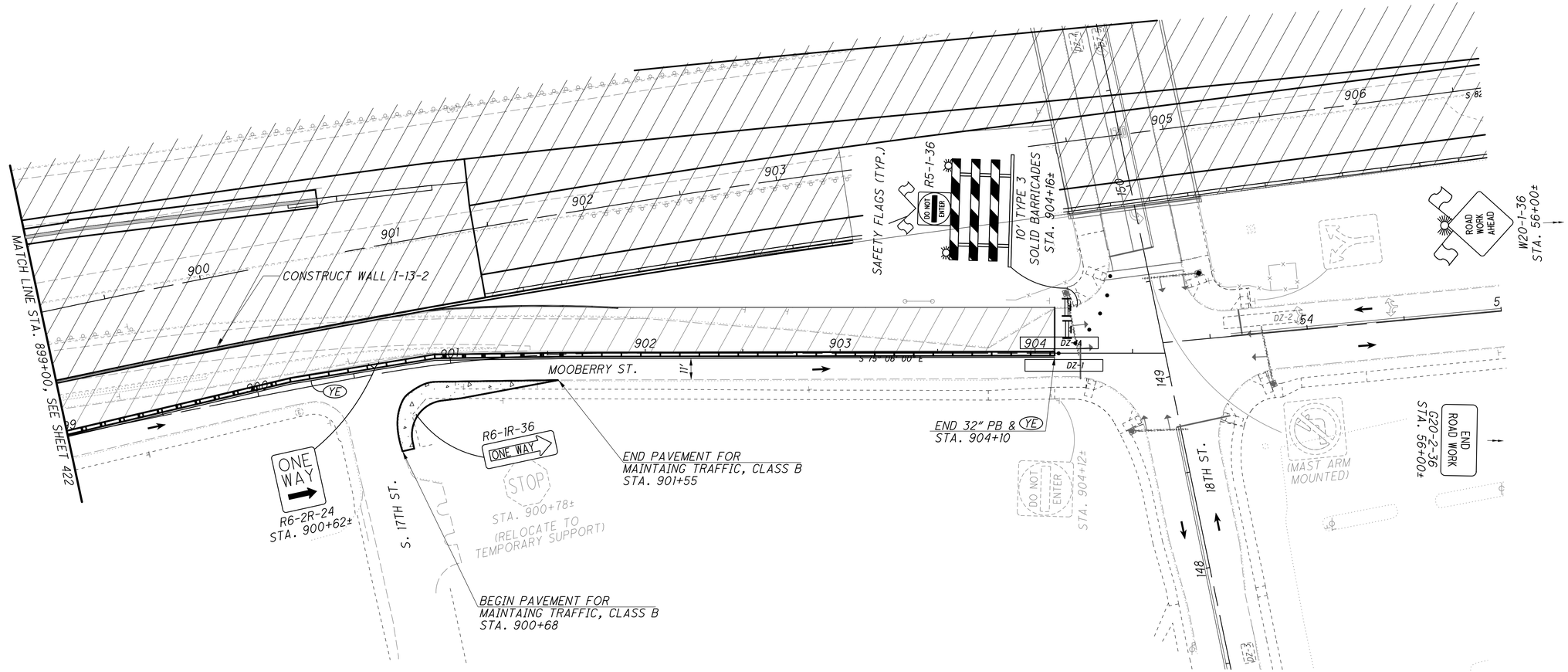

NOTE:

1. ALL PAVEMENT MARKINGS ARE EXISTING TO REMAIN OR PLACED IN PREVIOUS STEP UNLESS OTHERWISE NOTED.

2. SEE SHEETS 427-429 FOR MAINLINE CONSTRUCTION MAINTENANCE OF TRAFFIC.

SHEET LEGEND

- TEMPORARY PAVEMENT PLACED PRIOR TO THIS PHASE
- TEMPORARY PAVEMENT PLACED DURING THIS PHASE
- WORK AREA

FOR COMPLETE LEGEND AND DRUM SPACING CHART, SEE SHEET 156

N

0 15 30 60 HORIZONTAL SCALE IN FEET

CALCULATED JAH
CHECKED JML

MAINTENANCE OF TRAFFIC - PHASE 3A
MOOBERRY ST, I-70 EB/WB, & Q3 - STEP 1

FRA-70-14.54

423
2317

PLOT.CEL

ms consultants, inc.
msconsultants.com

Ohio DOT Workspace
70\71 East Interchange 2E
www.msconsultants.com

0 0.5" 1"

Batchplot Spec: \\msconsultants.com\files\Production\Q3\60\06634_2E\standards\plotdrv\batchplt.spc
Pen Table: \\msconsultants.com\files\Standards\usth\ohdot\V8i\ms\plotting\pen\V8i_ms_std.tbl PDF: ohdot\V8i
Plot Driver: \\msconsultants.com\files\Standards\usth\ohdot\v8i\ms\plotting\PDF.pltcfg PCF: 60-06634_2E_Columbus

34" x 22"

Model: Sheet View: FENCE_VIEW1
Printed: 9/28/2018 @ 10:25:04 AM By: kryan
File: \\msconsultants.com\files\Production\Q3\60\06634_2E\mot\sheets\105322MP3053.dgn

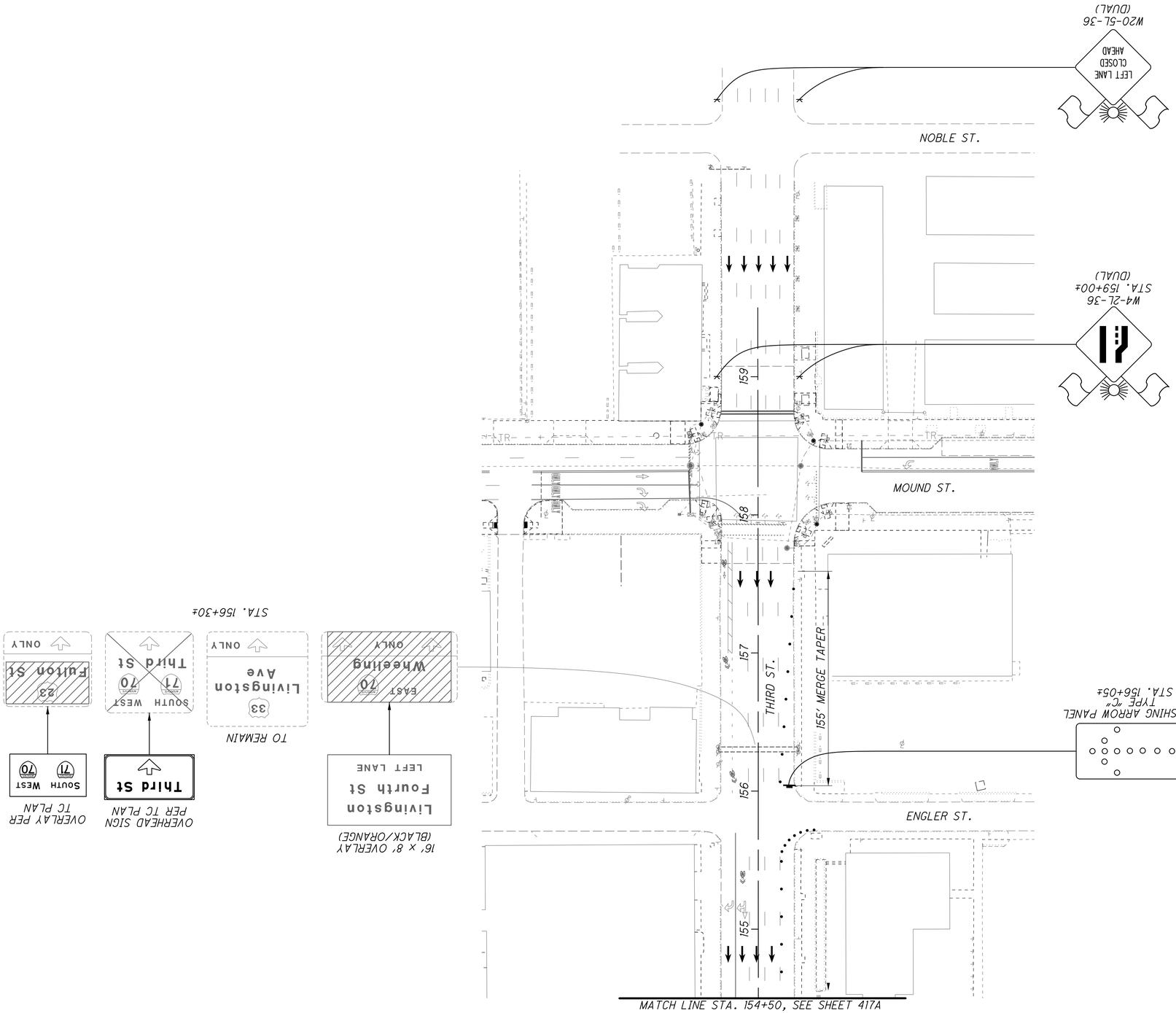

SHEET LEGEND

- TEMPORARY PAVEMENT PLACED PRIOR TO THIS PHASE
- TEMPORARY PAVEMENT PLACED DURING THIS PHASE
- WORK AREA

FOR COMPLETE LEGEND AND DRUM SPACING CHART, SEE SHEET 156

0 20 40 80
HORIZONTAL SCALE IN FEET

CALCULATED JAH
CHECKED JML

MAINTENANCE OF TRAFFIC - PHASE 3A
MOOBERRY ST. I-70 EB/WB & Q3 - STEP 1

FRA-70-14.54

423A
2317

PLOT.CEL

ms consultants, inc.
msconsultants.com

ms consultants, inc.
www.msconsultants.com

Ohio DOT Workspace
70\71 East Interchange 2E
PCF: 60-06634_2E_Columbus

PCF: ohdot\8i

0 1"
0.5"

Batchplot Spec: \\msconsultants.com\Files\Production\03\60\06634_2E\standards\plotdr\batchplt.spc
Pen Table: \\msconsultants.com\Files\Standards\ustn\ohdot\V8i\ms\plotting\pen\V8i_ms_std.tbl
Plot Driver: \\msconsultants.com\Files\Standards\ustn\ohdot\v8i\ms\plotting\PDF.pltcfg

Model: Sheet
Printed: 9/28/2018 @ 10:25:09 AM
File: N:\03\60\06634_2E\mot\sheets\105229MP3044.dgn

View: FENCE_VIEW1
By: kryan

34" x 22"

PARSONS AVE.

LIVINGSTON AVE.

ONLY

END ROAD WORK (PLACED IN PREVIOUS PHASE)

ROAD WORK AHEAD (PLACED IN PREVIOUS PHASE)

ONLY ONLY ONLY (PLACED IN PREVIOUS PHASE)

ONLY ONLY ONLY (PLACED IN PREVIOUS PHASE)

LIVINGSTON AVE.

ONLY

(PLACED IN PREVIOUS PHASE)

PARSONS AVE.

(PLACED IN PREVIOUS PHASE)

(PLACED IN PREVIOUS PHASE)

BIKE LANE ONLY

ENDS

(PLACED IN PREVIOUS PHASE)

BIKE LANE ENDS

CHILDREN'S CROSSROAD

BEGIN (WE) & (YE)
STA. 179+04

SIDEWALK CLOSED

R9-9-24 (PLACED IN PREVIOUS PHASE)

BEGIN 32" PB
STA. 179+60

(WE)

(YE)

(YE)

BEGIN 32" PB
STA. 179+50

KEEP (RIGHT)

W.Z. ATTENUATOR

R3-17BP-24 (PLACED IN PREVIOUS PHASE)

(PLACED IN PREVIOUS PHASE)

BIKE LANE ONLY

ENDS

BIKE LANE ENDS

MATCH LINE STA. 180+00, SEE SHEET 421

CHILDREN'S DR.

NOTE:

1. ALL PAVEMENT MARKINGS ARE EXISTING TO REMAIN OR PLACED IN PREVIOUS STEP UNLESS OTHERWISE NOTED.

SHEET LEGEND

- TEMPORARY PAVEMENT PLACED PRIOR TO THIS PHASE
- TEMPORARY PAVEMENT PLACED DURING THIS PHASE
- WORK AREA

FOR COMPLETE LEGEND AND DRUM SPACING CHART, SEE SHEET 156

N

0 15 30 60
HORIZONTAL SCALE IN FEET

CALCULATED JAH
CHECKED JML

MAINTENANCE OF TRAFFIC - PHASE 3A
MOOBERRY ST, I-70 EB/WB, & Q3 - STEP 1

FRA-70-14.54

424
2317

PLOT.CEL
ms consultants, inc.
msconsultants.com
www.msconsultants.com
Ohio DOT Workspace
70\71 East Interchange 2E
0 1" 0.5"
Batchplot Spec: \\msconsultants.com\files\production\03\60\06634_2E\standards\plotdrv\batchplt.spc
Pen Table: \\msconsultants.com\files\Standards\astm\ohdot\V8i\ms\plotting\pen\V8i_ms_std.tbl PCF: ohdotV8i
Plot Driver: \\msconsultants.com\files\Standards\astm\ohdot\v8i\ms\plotting\PDF.pltcfg PCF: 60-06634_2E_Columbus
Model: Sheet View: FENCE_VIEW1
Printed: 9/28/2018 @ 10:25:15 AM By: kryan
File: N:\03\60\06634_2E\mot\sheets\105322MP3096.dgn
34" x 22"

℄ MOOBERRY ST.

VARIES WORK AREA | 2′ | 10′

CONSTRUCTION JOINT

DRUM

TYPICAL SECTION 18-18

(NOT TO SCALE)

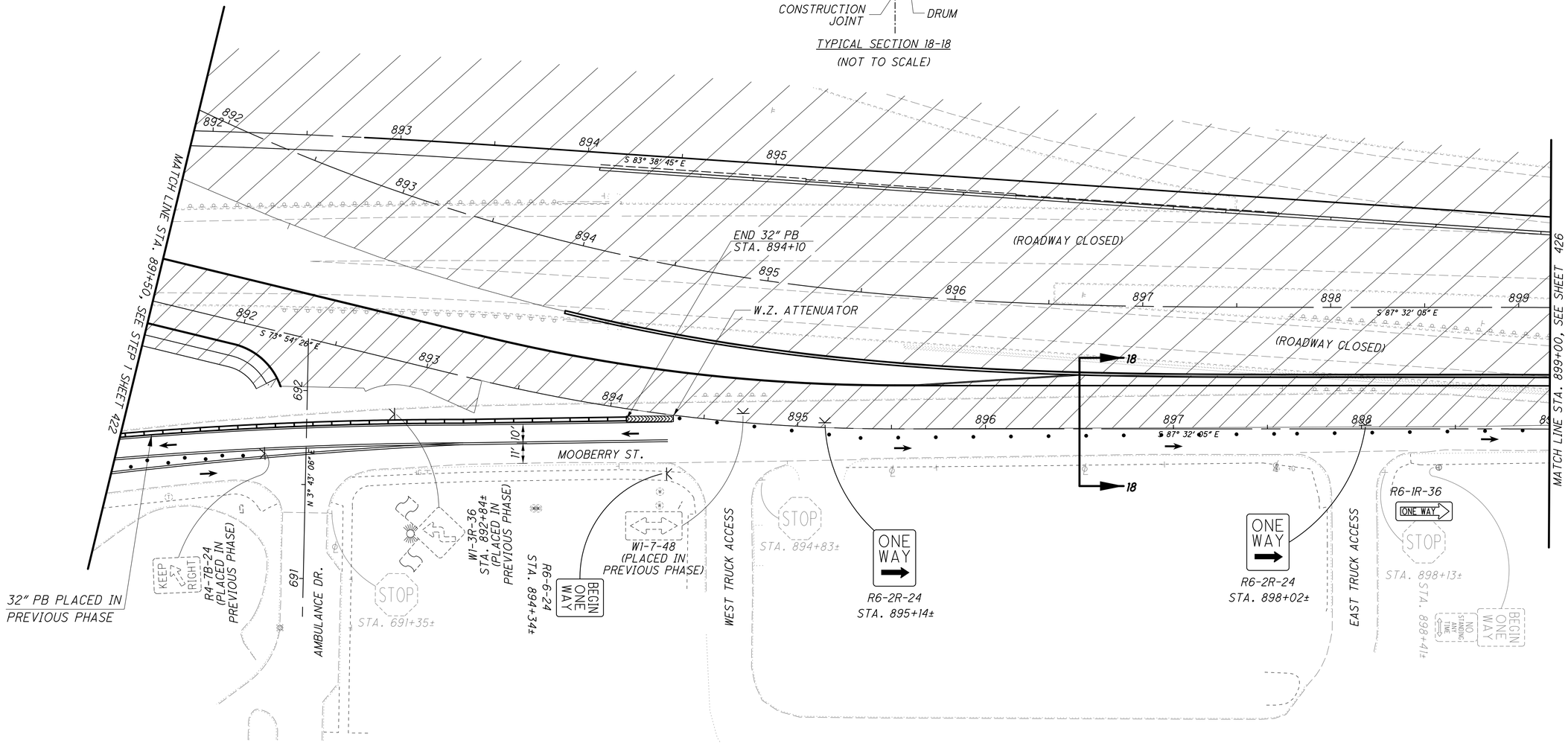

NOTE:

1. ALL PAVEMENT MARKINGS ARE EXISTING TO REMAIN OR PLACED IN PREVIOUS STEP UNLESS OTHERWISE NOTED.

2. SEE SHEETS 427-429 FOR MAINLINE CONSTRUCTION MAINTENANCE OF TRAFFIC OCCURRING SIMULTANEOUSLY.

SHEET LEGEND

- TEMPORARY PAVEMENT PLACED PRIOR TO THIS PHASE
- TEMPORARY PAVEMENT PLACED DURING THIS PHASE
- WORK AREA

FOR COMPLETE LEGEND AND DRUM SPACING CHART, SEE SHEET 156

HORIZONTAL SCALE IN FEET
0 15 30 60

CALCULATED JAH
CHECKED JML

MAINTENANCE OF TRAFFIC - PHASE 3A
MOOBERRY ST, I-70 EB/WB, & Q3 - STEP 2

FRA-70-14.54

425
2317

ms consultants, inc.

PLOT.CEL
ms consultants, inc.
msconsultants.com
www.msconsultants.com
Ohio DOT Workspace
70\71 East Interchange 2E
0 1" 0.5"
Batchplot Spec: \\msconsultants.com\files\production\03\60\06634_2E\standards\plotdr\batchplt.spc
Pen Table: \\msconsultants.com\files\Standards\ustn\ohdot\V8i\ms\plotting\pen\V8i_ms_std.tbl PDF: ohdotV8i
Plot Driver: \\msconsultants.com\files\Standards\ustn\ohdot\v8i\ms\plotting\PDF.pltcfg PDF: 60-06634_2E_Columbus
Model: Sheet View: FENCE_VIEW1
Printed: 9/28/2018 @ 10:25:19 AM By: kryan
File: N:\03\60\06634_2E\mot\sheets\MOS32MP3097.dgn
34" x 22"

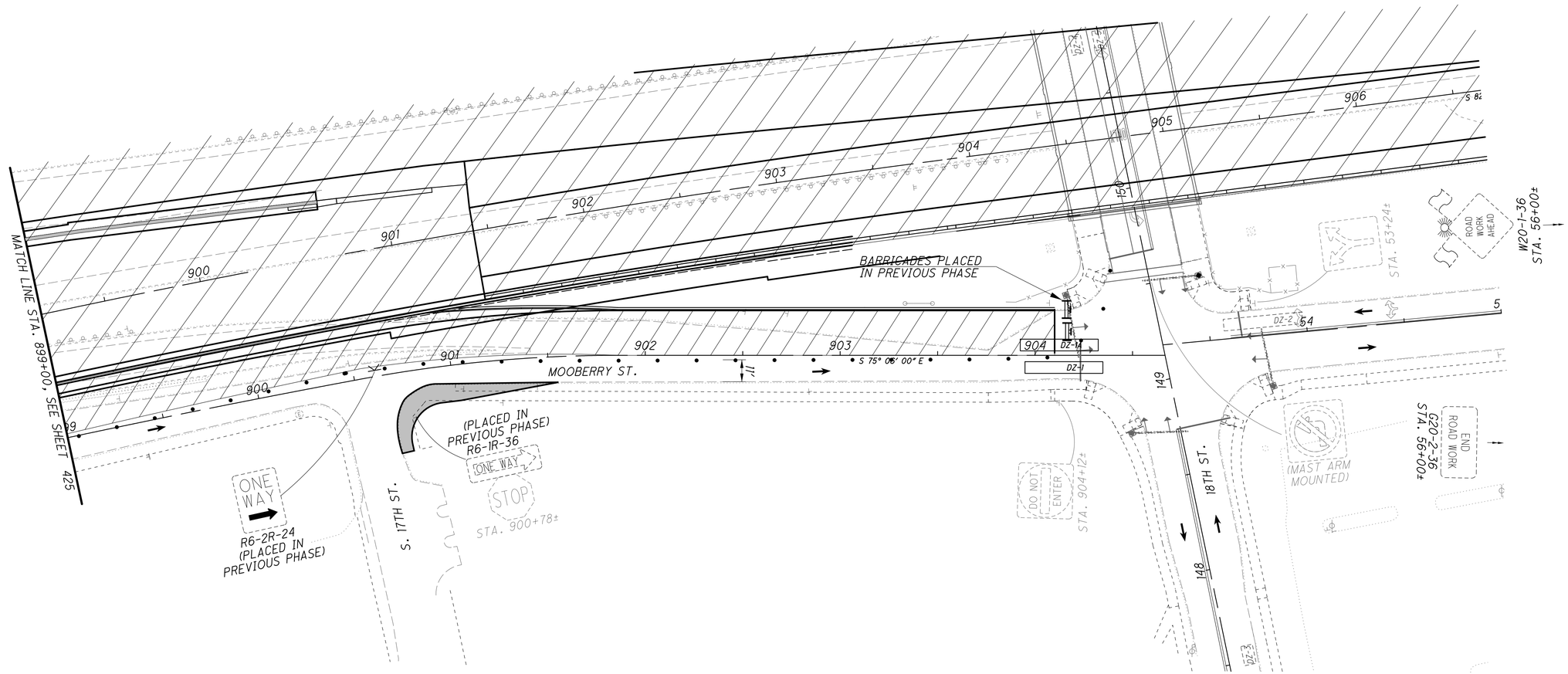

NOTE:

1. ALL PAVEMENT MARKINGS ARE EXISTING TO REMAIN OR PLACED IN PREVIOUS STEP UNLESS OTHERWISE NOTED.

2. SEE SHEETS 427-429 FOR MAINLINE CONSTRUCTION MAINTENANCE OF TRAFFIC.

SHEET LEGEND

- TEMPORARY PAVEMENT PLACED PRIOR TO THIS PHASE
- TEMPORARY PAVEMENT PLACED DURING THIS PHASE
- WORK AREA

FOR COMPLETE LEGEND AND DRUM SPACING CHART, SEE SHEET 156

N

0 15 30 60 HORIZONTAL SCALE IN FEET

CALCULATED JAH
CHECKED JML

MAINTENANCE OF TRAFFIC - PHASE 3A
MOOBERRY ST, I-70 EB/WB, & Q3 - STEP 2

FRA-70-14.54

426
2317

PLOT.CEL

ms consultants, inc.
msconsultants.com

www.msconsultants.com

Ohio DOT Workspace
70\71 East Interchange 2E

1"
0.5"
0

Batchplot Spec: \\msconsultants.com\Files\Production\03\60\06634_2E\standards\plotdr\batchplt.spc
Pen Table: \\msconsultants.com\Files\Standards\usth\ohdot\V8i\ms\plotting\pen\V8i_ms_std.tbl PCF: ohdotV8i
Plot Driver: \\msconsultants.com\Files\Standards\usth\ohdot\V8i\ms\plotting\PDF.pltcfg PCF: 60-06634_2E_Columbus

Model: Sheet View: FENCE_VIEW1
Printed: 9/28/2018 @ 10:25:28 AM By: kryan
File: N:\03\60\06634_2E\mot\sheets\105322MP3090.dgn

34" x 22"

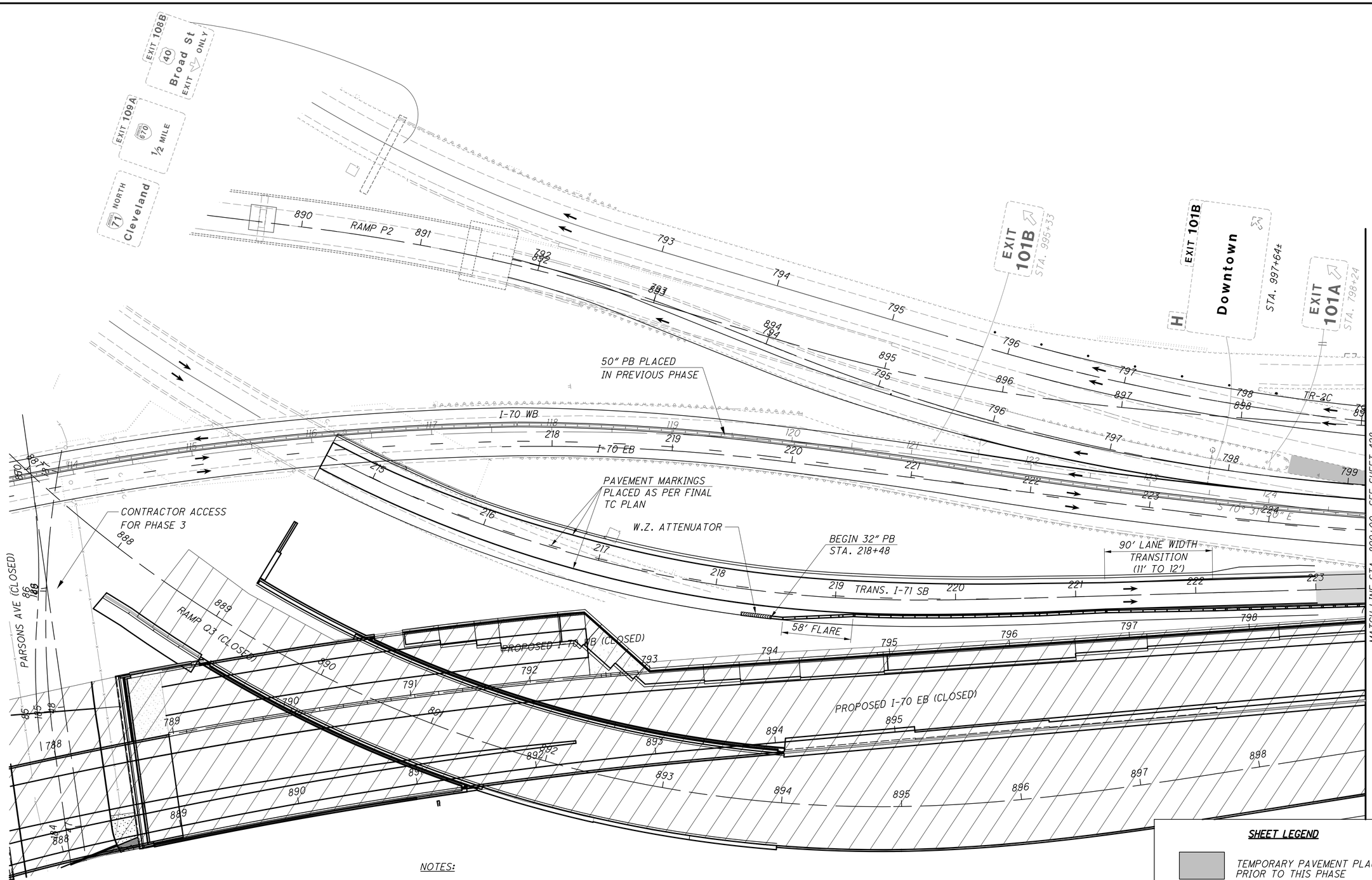

NOTES:

1. ALL PAVEMENT MARKINGS ARE EXISTING TO REMAIN OR PLACED IN A PREVIOUS STEP UNLESS OTHERWISE NOTED.
2. SEE SHEETS 418-426 FOR MOOBERRY STREET CONSTRUCTION AND MAINTENANCE OF TRAFFIC OCCURRING SIMULTANEOUSLY.

SHEET LEGEND

- TEMPORARY PAVEMENT PLACED PRIOR TO THIS PHASE
- TEMPORARY PAVEMENT PLACED DURING THIS PHASE
- WORK AREA

FOR COMPLETE LEGEND AND DRUM SPACING CHART, SEE SHEET 156

N

0 20 40 80
HORIZONTAL SCALE IN FEET

CALCULATED JAH
CHECKED JML

MAINTENANCE OF TRAFFIC - PHASE 3A
MOOBERRY ST, I-70 EB/WB, & Q3 - STEP 3

FRA-70-14.54

ms consultants, inc.

PLOT.CEL

ms consultants, inc.
msconsultants.com

www.msconsultants.com

Ohio DOT Workspace
70\71 East Interchange 2E

0 0.5" 1"

Batchplot Spec: \\msconsultants.com\files\production\03\60\06634_2E\standards\olotdr\batchplt.spc
Pen Table: \\msconsultants.com\files\Standards\ustn\ohdot\V8i\ms\plotting\pen\V8i_ms_std.tbl
Plot Driver: \\msconsultants.com\files\Standards\ustn\ohdot\V8i\ms\plotting\PDF.pltcfg
PCF: ohdot\V8i
PCF: 60-06634_2E_Columbus

34" x 22"

Model: Sheet View: FENCE_VIEW1
Printed: 9/28/2018 @ 10:25:34 AM By: kryan
File: N:\03\60\06634_2E\mot\sheets\V05322MP3091.dgn

NOTES:

1. ALL PAVEMENT MARKINGS ARE EXISTING TO REMAIN OR PLACED IN A PREVIOUS STEP UNLESS OTHERWISE NOTED.

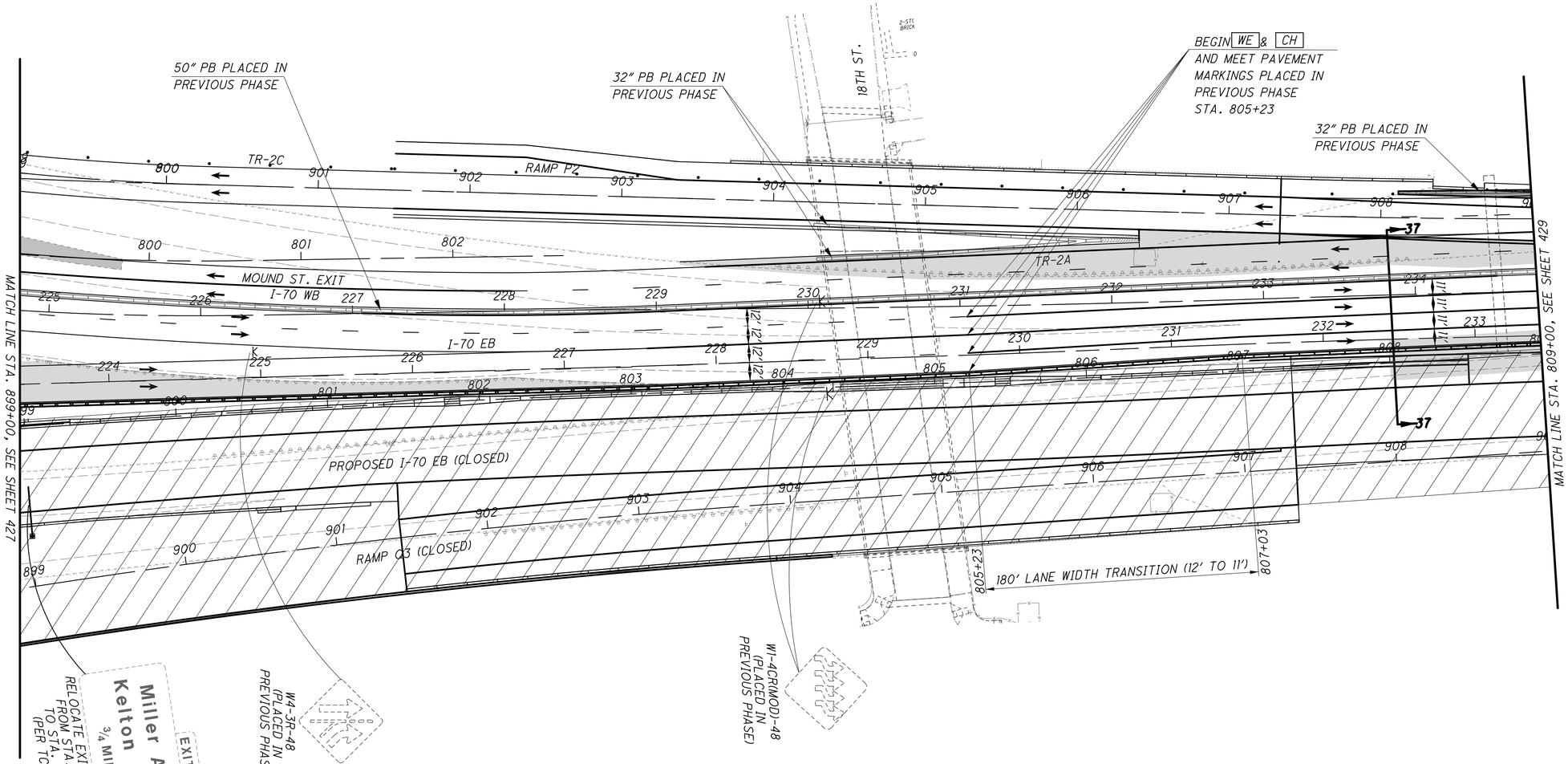

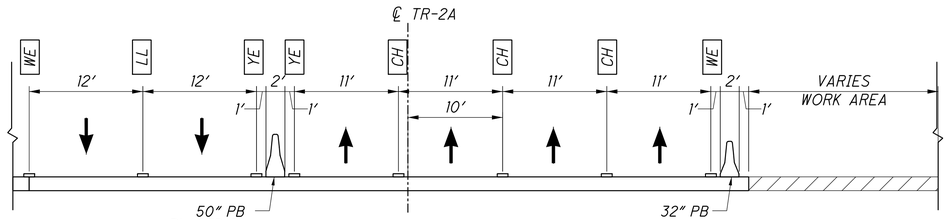

TYPICAL SECTION 37-37
NOT TO SCALE
(ALL PAVEMENT MARKINGS PLACED IN PREVIOUS PHASE)

SHEET LEGEND

- TEMPORARY PAVEMENT PLACED PRIOR TO THIS PHASE
- TEMPORARY PAVEMENT PLACED DURING THIS PHASE
- WORK AREA

FOR COMPLETE LEGEND AND DRUM SPACING CHART, SEE SHEET 156

N

0 20 40 80 HORIZONTAL SCALE IN FEET

CALCULATED JAH
CHECKED JML

MAINTENANCE OF TRAFFIC - PHASE 3A
MOOBERRY ST, I-70 EB/WB, & Q3 - STEP 3

FRA-70-14.54

428
2317

NOTES

1. ALL PAVEMENT MARKINGS ARE EXISTING TO REMAIN OR PLACED IN PREVIOUS STEP UNLESS OTHERWISE NOTED.

2. ALL DOWNWARD ARROWS ON OVERHEAD SIGNS SHALL BE PLACED OVER THE CENTER OF THEIR RESPECTIVE TRAVEL LANE.

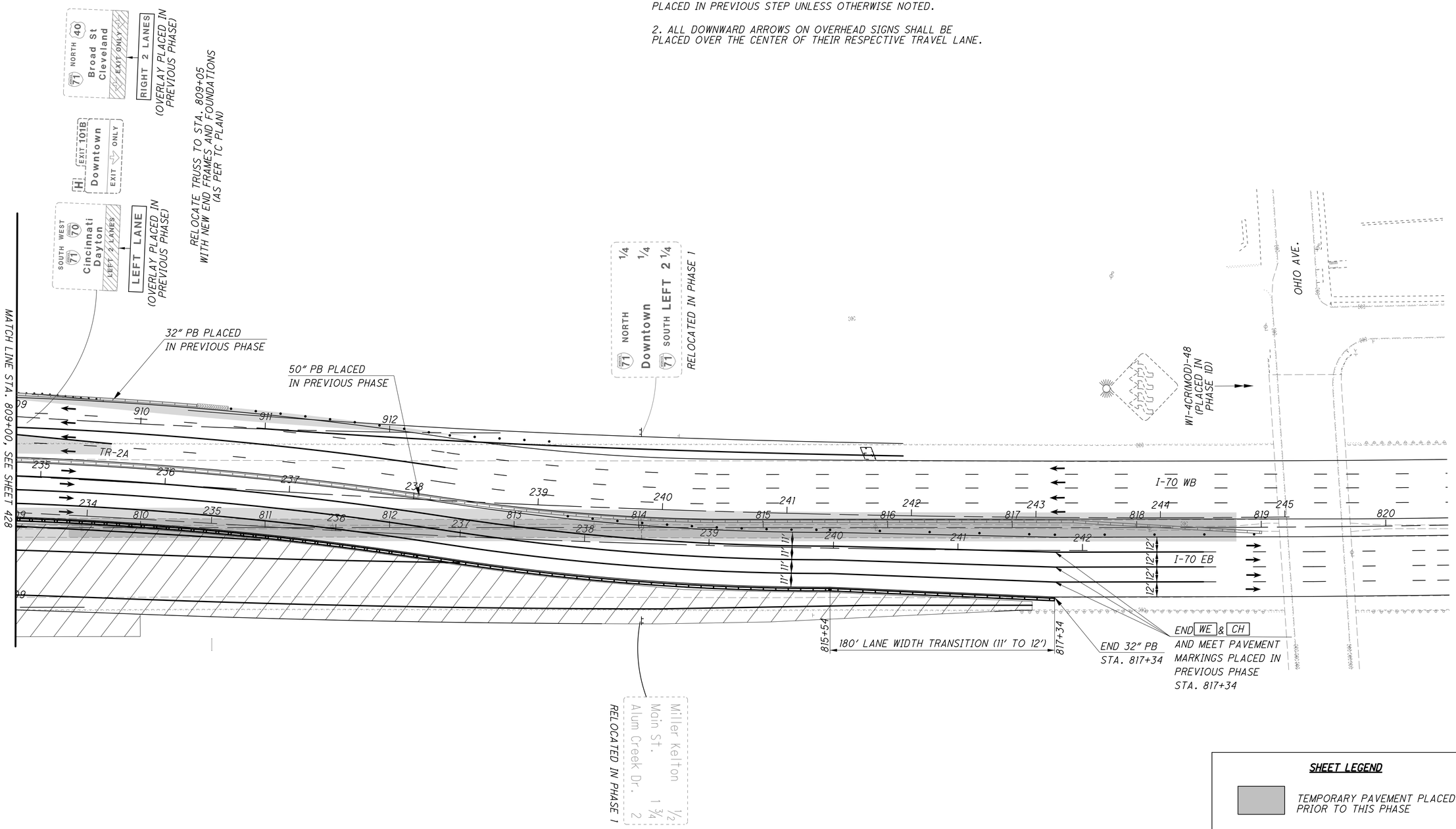

SHEET LEGEND

TEMPORARY PAVEMENT PLACED PRIOR TO THIS PHASE

TEMPORARY PAVEMENT PLACED DURING THIS PHASE

WORK AREA

FOR COMPLETE LEGEND AND DRUM SPACING CHART, SEE SHEET 156

HORIZONTAL SCALE IN FEET 0 20 40 80

CALCULATED JAH
CHECKED JML

MAINTENANCE OF TRAFFIC - PHASE 3A
MOOBERRY ST, I-70 EB/WB, & Q3 - STEP 3

FRA-70-14.54

ms consultants, inc.
PLOT.CEL
ms consultants, inc.
msconsultants.com
Ohio DOT Workspace
70\71 East Interchange 2E
www.msconsultants.com
Batchplot Spec: \\msconsultants.com\files\production\03\60\06634_2E\standards\plotdrv\batchplt.spc
Pen Table: \\msconsultants.com\files\Standards\ustn\ohdot\V8i\ms\plotting\pen\V8i_ms_std.tbl
Plot Driver: \\msconsultants.com\files\Standards\ustn\ohdot\v8i\ms\plotting\PDF.pltcfg
34" x 22"
Model: Sheet
Printed: 9/28/2018 @ 10:25:39 AM
File: N:\03\60\06634_2E\mot\sheets\105322MP3092.dgn
View: FENCE_VIEW1
By: kryan

PLOT.CEL

ms consultants, inc.
msconsultants.com

www.msconsultants.com

Ohio DOT Workspace
70\71 East Interchange 2E

0 0.5" 1"

Batchplot Spec: \\msconsultants.com\files\production\Q3\60\06634_2E\standards\plotdir\batchplt.spc
Pen Table: \\msconsultants.com\files\Standards\usth\ohdot\V8i\ms\plotting\pen\V8i_ms_std.tbl
Plot Driver: \\msconsultants.com\files\Standards\usth\ohdot\V8i\ms\plotting\PDF.pltcfg
PDF: ohdot\V8i
PLOT: 60-06634_2E_Columbus

34" x 22"

Model: Sheet
Plotted: 9/28/2018 @ 10:25:43 AM
File: N:\03\60\06634_2E\mot\sheets\105322MP3046.dgn
View: FENCE_VIEW1
By: kryan

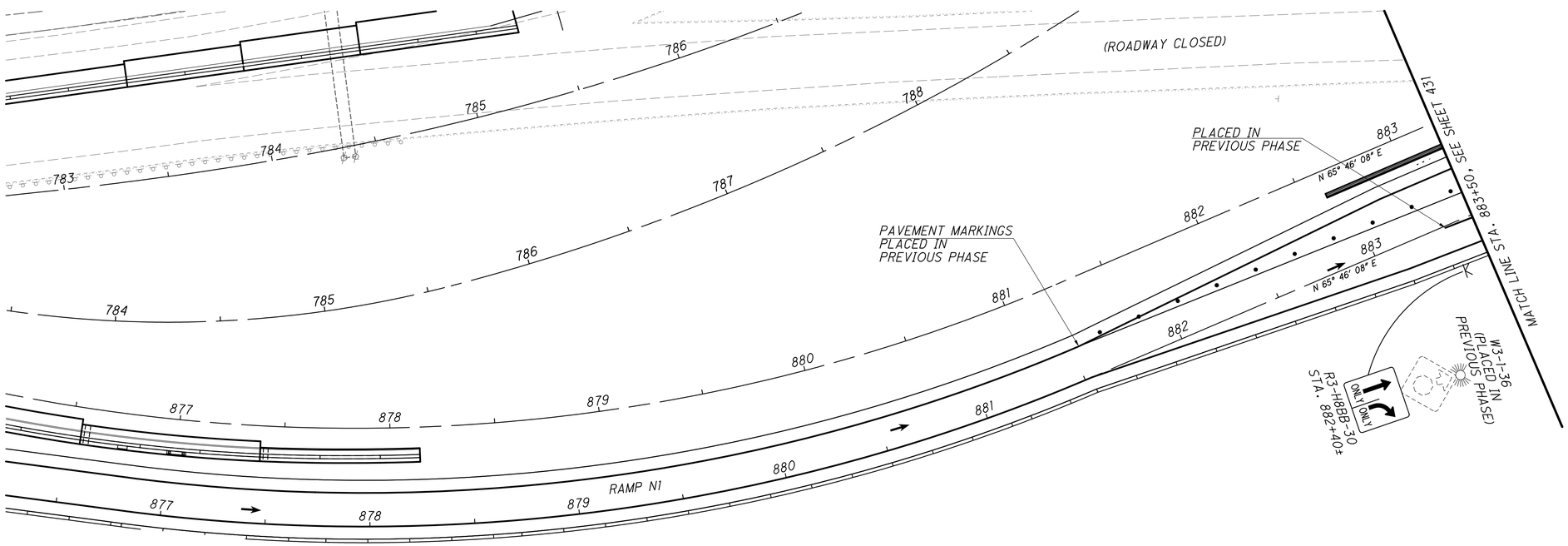

NOTE:

1. ALL PAVEMENT MARKINGS ARE EXISTING TO REMAIN OR PLACED IN PREVIOUS STEP UNLESS OTHERWISE NOTED.

SHEET LEGEND

- TEMPORARY PAVEMENT PLACED PRIOR TO THIS PHASE
- TEMPORARY PAVEMENT PLACED DURING THIS PHASE
- WORK AREA

FOR COMPLETE LEGEND AND DRUM SPACING CHART, SEE SHEET 156

HORIZONTAL SCALE IN FEET
0 15 30 60

CALCULATED JAH
CHECKED JML

MAINTENANCE OF TRAFFIC - PHASE 3A
MOOBERRY ST, I-70 EB/WB, & Q3 - STEP 4

FRA-70-14.54

430
2317

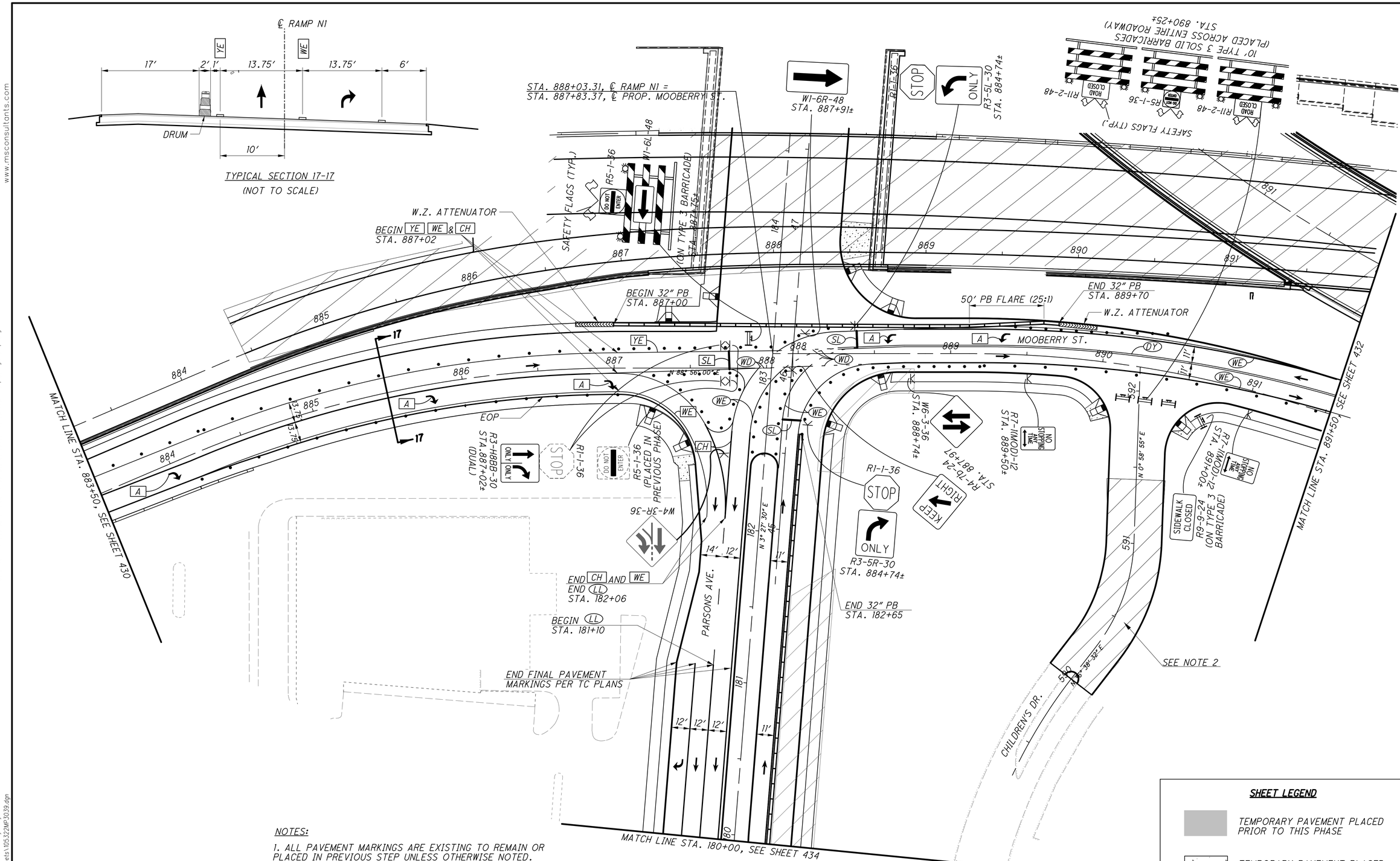

NOTES:

1. ALL PAVEMENT MARKINGS ARE EXISTING TO REMAIN OR PLACED IN PREVIOUS STEP UNLESS OTHERWISE NOTED.

2. CHILDREN'S DRIVE IS PERMITTED TO BE CLOSED FOR A MAXIMUM OF 14 CALENDAR DAYS TO COMPLETE CONSTRUCTION. UPON COMPLETION, THE ROADWAY SHALL BE REOPENED TO TWO-WAY TRAFFIC.

3. SEE SHEET 378 FOR PARSONS AVENUE DETOUR.

SHEET LEGEND

TEMPORARY PAVEMENT PLACED PRIOR TO THIS PHASE

TEMPORARY PAVEMENT PLACED DURING THIS PHASE

WORK AREA

FOR COMPLETE LEGEND AND DRUM SPACING CHART, SEE SHEET 156

HORIZONTAL SCALE IN FEET

CALCULATED JAH
CHECKED JML

MAINTENANCE OF TRAFFIC - PHASE 3A
MOOBERRY ST, I-70 EB/WB, & Q3 - STEP 4

FRA-70-14.54

ms consultants, inc.

PLOT.CEL

ms consultants, inc.
msconsultants.com

www.msconsultants.com

Ohio DOT Workspace
70\71 East Interchange 2E

Batchplot Spec: \\msconsultants.com\files\production\03\60\06634_2E\standards\plotdrv\batchplt.spec
Pen Table: \\msconsultants.com\files\Standards\astm\ohdot\V8i\ms\plotting\pen\V8i_ms_std.tbl
Plot Driver: \\msconsultants.com\files\Standards\astm\ohdot\V8i\ms\plotting\PDF.pltcfg

PDF: ohdotV8i
DGN: 60-06634_2E_Columbus

Model: Sheet
Printed: 9/28/2018 @ 10:25:53 AM
File: N:\03\60\06634_2E\mot\sheets\105229MP3040.dgn
View: FENCE_VIEW1
By: kryan

34" x 22"

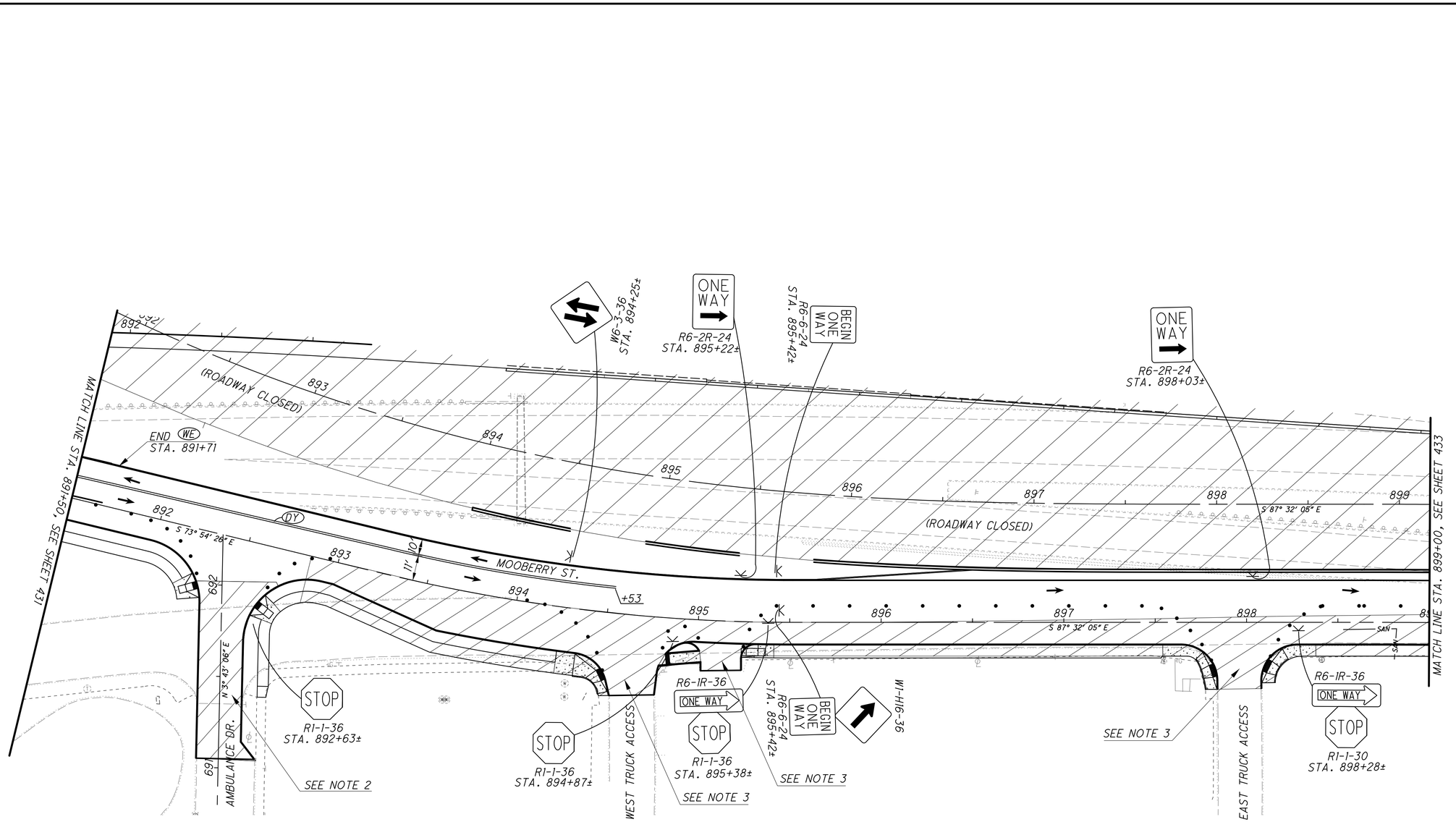

NOTES:

1. ALL PAVEMENT MARKINGS ARE EXISTING TO REMAIN OR PLACED IN A PREVIOUS STEP UNLESS OTHERWISE NOTED.

2. THE AMBULANCE DRIVE SHALL REMAIN OPEN TO TWO-WAY TRAFFIC AT ALL TIMES. DURING WORKING HOURS, THE CONTRACTOR IS PERMITTED TO UTILIZE A ONE LANE, TWO-WAY OPERATION WITH FLAGGERS. CONSTRUCTION OF THIS DRIVE SHALL BE RESTRICTED TO A MAXIMUM DURATION OF 14 CALENDAR DAYS. CONTRACTOR SHALL COORDINATE THIS CONSTRUCTION WTIH NATIONWIDE CHILDREN'S HOSPITAL PRIOR TO BEGINNING WORK ON THIS DRIVE.

3. PRIOR TO BEGINNING WORK ON THIS DRIVE, THE CONTRACTOR SHALL COORDINATE CONSTRUCTION OF THIS DRIVE WITH NATIONWIDE CHILDREN'S HOSPITAL (NCH). DRIVE SHALL BE CONSTRUCTED HALF AT A TIME AND SHALL REMAIN OPEN TO TRAFFIC AT ALL TIMES. AT NO TIME, IS CONCURRENT CONSTRUCTION OF MULTIPLE DRIVES ALONG MOOBERRY STREET PERMITTED. ALL OTHER DRIVES SHALL REMAIN FULLY OPEN DURING CONSTRUCTION OF THIS DRIVE. COMPLETE CLOSURE OF DRIVE SHALL ONLY BE PERMITTED WITH WRITTEN PERMISSION FROM THE ENGINEER AND NCH. SEE 'DRIVEWAYS/PROPERTY ACCESS' NOTE ON SHEET 103 FOR MORE INFORMATION.

SHEET LEGEND

- TEMPORARY PAVEMENT PLACED PRIOR TO THIS PHASE
- TEMPORARY PAVEMENT PLACED DURING THIS PHASE
- WORK AREA

FOR COMPLETE LEGEND AND DRUM SPACING CHART, SEE SHEET 156

HORIZONTAL SCALE IN FEET
0 15 30 60

CALCULATED JAH
CHECKED JML

MAINTENANCE OF TRAFFIC - PHASE 3A
MOOBERRY ST, I-70 EB/WB, & Q3 - STEP 4

FRA-70-14.54

ms consultants, inc.

PLOT.CEL

ms consultants, inc.
msconsultants.com

www.msconsultants.com

Ohio DOT Workspace
70\71 East Interchange 2E

Batchplot Spec: \\msconsultants.com\files\production\03\60\06634_2E\standards\plotdir\batchplt.spc
Pen Table: \\msconsultants.com\files\Standards\ustn\ohdot\V8i\ms\plotting\pen\V8i_ms_std.tbl
Plot Driver: \\msconsultants.com\files\Standards\ustn\ohdot\V8i\ms\plotting\PDF.pltcfg

PDF: ohdotV8i
PDF: 60-06634_2E_Columbus

Model: Sheet
Printed: 9/28/2018 @ 10:26:02 AM
File: N:\03\60\06634_2E\me1\sheets\105322MP304.dgn

View: FENCE_VIEW1
By: kryan

34" x 22"

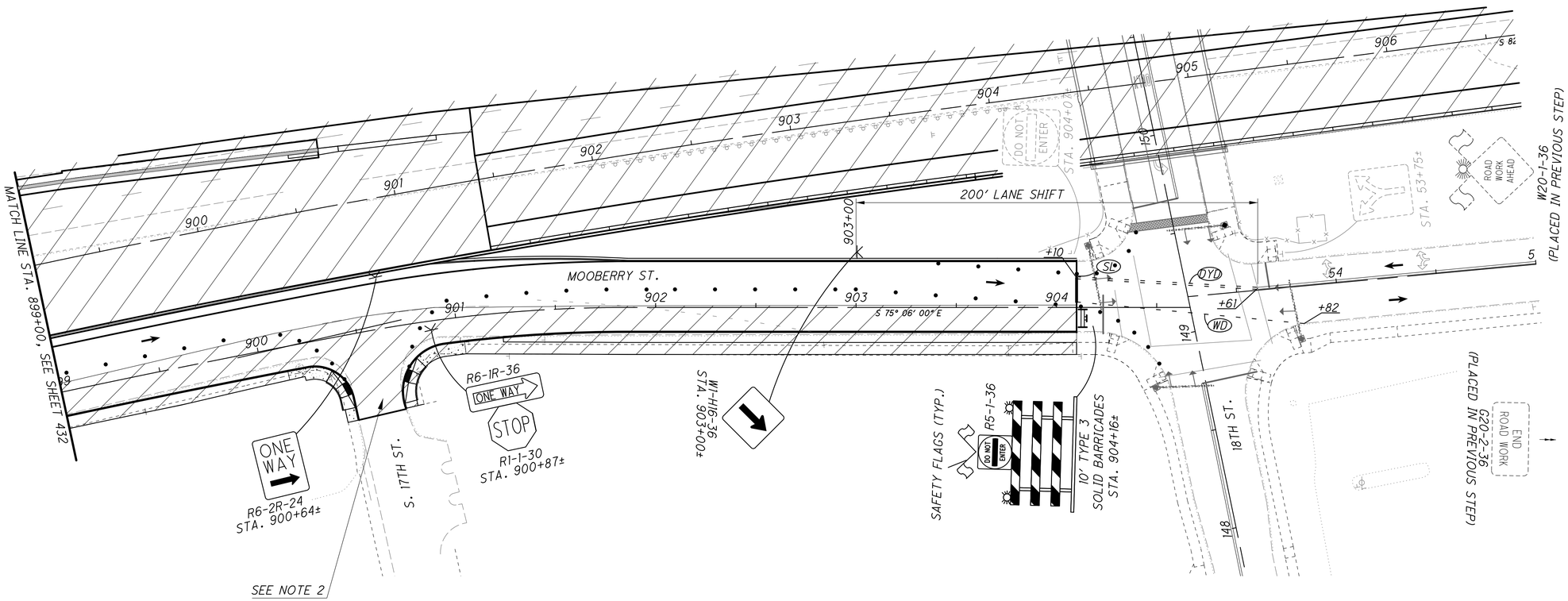

NOTES:

1. ALL PAVEMENT MARKINGS ARE EXISTING TO REMAIN OR PLACED IN PREVIOUS STEP UNLESS OTHERWISE NOTED.

2. PRIOR TO BEGINNING WORK ON THIS DRIVE, THE CONTRACTOR SHALL COORDINATE CONSTRUCTION OF THIS DRIVE WITH NATIONWIDE CHILDREN'S HOSPITAL (NCH). DRIVE SHALL BE CONSTRUCTED HALF AT A TIME AND SHALL REMAIN OPEN TO TRAFFIC AT ALL TIMES. AT NO TIME, IS CONCURRENT CONSTRUCTION OF MULTIPLE DRIVES ALONG MOOBERRY STREET PERMITTED. ALL OTHER DRIVES SHALL REMAIN FULLY OPEN DURING CONSTRUCTION OF THIS DRIVE. COMPLETE CLOSURE OF DRIVE SHALL ONLY BE PERMITTED WITH WRITTEN PERMISSION FROM THE ENGINEER AND NCH. SEE 'DRIVEWAYS/PROPERTY ACCESS' NOTE ON SHEET 103 FOR MORE INFORMATION.

SHEET LEGEND

- TEMPORARY PAVEMENT PLACED PRIOR TO THIS PHASE
- TEMPORARY PAVEMENT PLACED DURING THIS PHASE
- WORK AREA

FOR COMPLETE LEGEND AND DRUM SPACING CHART, SEE SHEET 156

HORIZONTAL SCALE IN FEET
0 15 30 60

CALCULATED JAH
CHECKED JML

MAINTENANCE OF TRAFFIC - PHASE 3A
MOOBERRY ST, I-70 EB/WB, & Q3 - STEP 4

FRA-70-14.54

433
2317

ms consultants, inc.

34" x 22"
Model: Sheet View: FENCE_VIEW1
Printed: 9/28/2018 @ 10:26:06 AM By: kryan
File: N:\03\60\06634_2E\mot\sheets\105322MP3047.dgn
Batchplot Spec: \\msconsultants.com\files\production\03\60\06634_2E\standards\plotdrv\batchplt.spc
Pen Table: \\msconsultants.com\files\Standards\ustn\ohdot\V8i\ms\plotting\pen\V8i_ms_std.tbl
Plot Driver: \\msconsultants.com\files\Standards\ustn\ohdot\v8i\ms\plotting\PDF.pltcfg
PCF: ohdotV8i
PCF: 60-06634_2E_Columbus
Ohio DOT Workspace
70\71 East Interchange 2E
www.msconsultants.com
ms consultants, inc.
msconsultants.com
PLOT.CEL

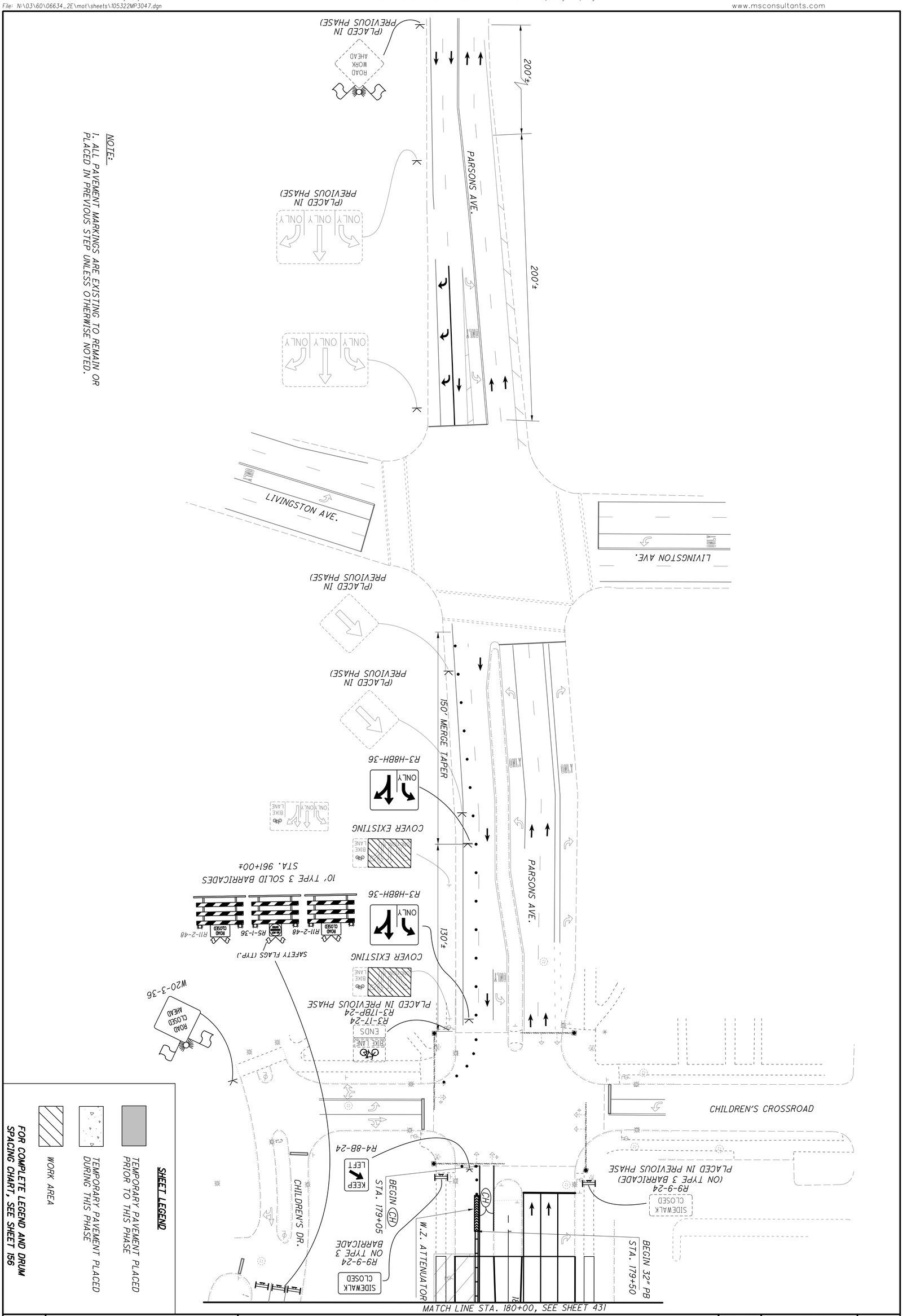

434 / 2317	FRA-70-14.54	MAINTENANCE OF TRAFFIC - PHASE 3A MOOBERRY ST, I-70 EB/WB, & Q3 - STEP 4	CALCULATED JAH CHECKED JML	0 15 30 60 HORIZONTAL SCALE IN FEET

PLOT.CEL

ms consultants, inc.
msconsultants.com

www.msconsultants.com

Ohio DOT Workspace
70\71 East Interchange 2E

0 0.5" 1"

34" x 22"

Batchplot Spec: \\msconsultants.com\files\production\03\60\06634_2E\standards\plotdrv\batchplt.spc
Pen Table: \\msconsultants.com\files\Standards\ustn\ohdot\V8i\ms\plotting\pen\V8i_ms_std.tbl
Plot Driver: \\msconsultants.com\files\Standards\ustn\ohdot\v8i\ms\plotting\PDF.pltcfg
PDF: ohdotV8i
DGN: 60-06634_2E_Columbus

Model: Sheet
Printed: 9/28/2018 @ 10:26:16 AM
File: N:\03\60\06634_2E\mot\sheets\105322M84001.dgn
View: FENCE_VIEW1
By: kryan

LEGEND

- WORK AREA
- ROADWAY CLOSED DURING THIS PHASE
- ROADWAY CLOSED PRIOR TO THIS PHASE
- TEMPORARY PAVEMENT PLACED DURING THIS PHASE
- TEMPORARY PAVEMENT PLACED PRIOR TO THIS PHASE
- I-6 RETAINING WALL

CALCULATED JAH
CHECKED JML

MAINTENANCE OF TRAFFIC - PHASE 4 SCHEMATIC

FRA-70-14.54

435
2317

PHASE 4B
TRANS. I70 WB & RAMP N3
SHEETS 456 - 464A

PHASE 4A
I-70 EB & RAMP CONSTRUCTION
SHEETS 438 - 455

PHASE 4B
FULTON STREET
SHEETS 460A - 460H

MATCHLINE (A)

MATCHLINE (A)

FRANKLIN AVE
PARSONS AVE.
I-71 SB
I-71 NB
TOWN ST.
WALNUT ST
LESTER DR
RICH ST.
BOONE ST.
CHERRY ST
PARSONS AVE.
E. MAIN ST.
MOUND ST.
HIGH ST.
THIRD ST.
FOURTH ST
FIFTH ST.
FULTON ST.
I-70 WB
I-70 EB
WASHINGTON AVE
GRANT AVE
ENGLER ST
RAMP P2
TR-2D
TR-1F
I-7
I-8A
KENNEDY DR.
CHILDREN'S CROSSROADS
CHILDRENS' DR. W.
NATIONWIDE CHILDREN'S HOSPITAL COMPLEX
18th ST
CARPENTER ST
GILBERT ST
22nd ST
OHIO AVE
MOOBERRY ST.

PLOT.CEL

ms consultants, inc.
msconsultants.com

www.msconsultants.com

Ohio DOT Workspace
70\71 East Interchange 2E

1"
0
0.5"

PDF: ohdot\V8i
PDF: 60-06634_2E_Columbus

Batchplot Spec: \\msconsultants.com\files\production\03\60\06634_2E\standards\ohdot\v8i\batchplt.spc
Pen Table: \\msconsultants.com\files\Standards\astm\ohdot\V8i\ms\plotting\pen\V8i_ms_std.tbl
Plot Driver: \\msconsultants.com\files\Standards\astm\ohdot\v8i\ms\plotting\PDF.pltcfg

Model: Sheet
Printed: 1/10/2019 @ 4:22:28 PM
File: \\msconsultants.com\files\Production\03\60\06634_2E\mot\sheets\105322MM4001.dgn

View: SHEET
By: dhall

34" x 22"

NO WORK SHALL OCCUR ON FULTON STREET UNTIL THE CITY OF COLUMBUS LIVINGSTON AVENUE PROJECT IS COMPLETE.

FULTON STREET SHALL NOT BE CONVERTED TO ONE WAY EASTBOUND UNTIL RAMP N3 IS OPEN TO I-70 EASTBOUND.

PHASE 4 SEQUENCE OF CONSTRUCTION

PHASE 4A, STEP 1 (SHEETS 438 - 442)

1) MAINTAIN 3 LANES OF I-70 EB IN THE WB LANES VIA THE CROSSOVER (TR-1D).

2) THROUGH THE INTERCHANGE, MAINTAIN 2 LANES OF I-70 EB IN CONTRAFLOW ON THE WB FLYOVER BRIDGE AND MAINTAIN 2 LANES OF I-70 EB TO I-71 NB ON THE EXISTING RAMP.

3) MAINTAIN ACCESS TO PARSONS AVE. VIA RAMP N1.

4) CONSTRUCT I-70 EB FROM APPROXIMATELY STA. 85+50 TO STA. 784+50.

5) CONSTRUCT RAMPS N2, N3, AND N4.

6) CONSTRUCT RETAINING WALLS I-7, I-8A, AND I-9A-1.

7) CONSTRUCT THE I-70 BRIDGES OVER RAMP N4 (FRA-70-1476R AND FRA-70-1479L).

PHASE 4A, STEP 2 (SHEETS 443 - 447)

1) MAINTAIN 2 LANES OF I-70 EB IN THE WB LANES VIA THE CROSSOVER (TR-1D).

2) SHIFT 2 LANES OF I-70 EB TO I-71 NB TO THE EB LANES AND RAMP N4 CONSTRUCTED IN STEP 1.

3) MAINTAIN ACCESS TO PARSONS AVE. VIA RAMP N1.

4) CONSTRUCT I-70 EB FROM APPROXIMATELY STA. 83+90 TO 85+55.

PHASE 4A, STEP 3 (SHEETS 448 - 455)

1) SHIFT 3 LANES OF I-70 EB TO THE EB LANES CONSTRUCTED IN STEPS 1 AND 2.

2) THROUGH THE INTERCHANGE, MAINTAIN 2 LANES OF I-70 EB IN THE EB LANES CONSTRUCTED IN STEP 1 AND MAINTAIN 2 LANES OF I-70 EB TO I-71 NB ON RAMP N4 CONSTRUCTED IN STEP 1.

3) MAINTAIN ACCESS TO PARSONS AVE. VIA RAMP N1.

4) CONSTRUCT I-70 EB FROM APPROXIMATELY STA. 81+90 TO STA. 85+55.

5) CONSTRUCT WB TEMPORARY PAVEMENT FROM STA. 901+07 TO 903+55 FOR USE IN PHASE 5.

PHASE 4B, STEP 1 (SHEETS 457 - 460, 460B)

1) SHIFT 3 LANES OF I-70 EB ONTO THE EB PAVEMENT COMPLETED IN PHASE 4A, STEP 3.

2) MAINTAIN I-70 EB TO I-71 NB ON RAMP N4.

3) MAINTAIN ACCESS TO PARSONS AVE. VIA RAMP N1.

4) CONSTRUCT I-70 EB AND I-70 WB FROM APPROXIMATELY STA. 769+03 TO STA. 781+00

5) CONSTRUCT RAMP N3 BRIDGE OVER I-70 WB (FRA-70-1461).

6) CONSTRUCT THE SOUTH SIDE OF FULTON STREET BETWEEN THIRD STREET AND JUST WEST OF FOURTH STREET.

PHASE 4B, STEP 2 (SHEETS 460A, 460C - 464A)

1) UPON COMPLETION OF CONSTRUCTION OF THE N3 BRIDGE OVER I-70 WB, OPEN RAMP N3 TO PROVIDE ACCESS FROM FULTON ST. TO I-70 EB.

2) CLOSE FULTON ST. FROM HIGH ST. TO THIRD ST. IN ACCORDANCE WITH CITY OF COLUMBUS STANDARD DRAWING 1540 FOR A SINGLE WEEKEND (FRIDAY 11 PM TO MONDAY 5 AM) IN ORDER TO RESURFACE AND RE-STRIPE FULTON STREET BETWEEN HIGH STREET AND THIRD STREET. REOPEN FULTON STREET AS ONE WAY EASTBOUND BETWEEN HIGH STREET AND FOURTH STREET.

3) CONSTRUCT THE NORTH HALF OF FULTON STREET BETWEEN THIRD STREET AND JUST WEST OF FOURTH STREET.

4) CLOSE THE FULTON STREET AND FOURTH STREET INTERSECTION AND CONSTRUCT THE PROPOSED FULTON STREET AND FOURTH STREET INTERSECTION DURING THIS TIME. THIS INTERSECTION IS PERMITTED TO CLOSE FOR A MAXIMUM OF 14 CALENDAR DAYS.

5) RAMP N2 WILL REMAIN CLOSED.

6) MAINTAIN I-70 EB AND I-71 NB FROM STEP 1.

7) MAINTAIN ACCESS TO PARSONS AVE. VIA RAMP N1.

8) CONTINUE I-70 EB AND I-70 WB CONSTRUCTION FROM STEP 1.

CALCULATED JAH
CHECKED JML

PHASE 4 - SEQUENCE OF CONSTRUCTION

FRA-70-14.54

436
2317

PLOT.CEL

ms consultants, inc.
msconsultants.com

Ohio DOT Workspace
70\71 East Interchange 2E
www.msconsultants.com

Batchplot Spec: \\msconsultants.com\files\production\03\60\06634_2E\standards\plotdrv\batchplt.spc
Pen Table: \\msconsultants.com\files\Standards\ustn\ohdot\v8i\ms\plotting\pen\V8i_ms_std.tbl
Plot Driver: \\msconsultants.com\files\Standards\ustn\ohdot\v8i\ms\plotting\PDF.pltcfg
PCF: ohdotV8i
PCF: 60-06634_2E_Columbus

34" x 22"

Model: Sheet
Printed: 2/13/2019 @ 7:29:11 PM
File: \\msconsultants.com\files\Production\03\60\06634_2E\mot\sheets\105322MN4002.dgn
View: FENCE_VIEW1
By: hbrendinger

PHASE 4 SUMMARY

CONSTRUCTION CRITICAL TO NEXT PHASE

PERMANENT RETAINING WALL CONSTRUCTION
- WALL I-7 BETWEEN I-70 EB AND RAMP N4
- WALL I-8A BETWEEN RAMP N4 AND RAMP N2

PERMANENT BRIDGE CONSTRUCTION
- RAMP N3 OVER I-70 (FRA-70-1461)
- I-70 OVER RAMP N2/N4 (FRA-1476)

PERMANENT ROADWAY CONSTRUCTION
- I-70 EB FROM WEST PROJECT LIMITS TO 400' WEST OF PARSONS AVENUE
- RAMP N4 FROM WEST PROJECT LIMITS TO JUST SOUTH OF EXISTING FLYOVER BRIDGE
- RAMP N3 FROM THE FRA-70-1461 STRUCTURE TO APPROXIMATELY 300' WEST OF PARSONS AVENUE
- RAMP N2
- FULTON STREET

CONSTRUCTION AVAILABLE THIS PHASE

- PARTIAL I-70 WB
- RAMP N3 & RAMP N2
- PARTIAL RAMP N4

CHILDREN'S HOSPITAL ACCESS DURING THIS PHASE

- GRANT AVENUE OPEN
- 18TH STREET OPEN
- I-70 EB EXIT TO PARSONS AVENUE/MOOBERRY STREET OPEN (RAMP N1)

WINDOW CONTRACT TABLE

ACTIVITY	AFFECTED ROADWAY(S)	RESTRICTION TYPE	RESTRICTION TIME	DISINCENTIVE
FULTON ST. AND FOURTH ST. INTERSECTION CLOSURE	FULTON ST. & FOURTH ST.	ROAD CLOSURE	14 CALENDAR DAYS	$3,500 PER DAY

NOTE: SEE SHEET 111 FOR DISINCENTIVE AMOUNTS ASSOCIATED WITH ANY MAINLINE ROADWAY OR SYSTEM RAMP OVERNIGHT CLOSURE REQUIRED IN THIS PHASE.

PROPOSED ROADWAY DESCRIPTIONS	
ROAD NAME	DESCRIPTION (DIRECTION OF STATIONING)
RAMP Q1	I-71 SB TO I-70 WB
RAMP Q3	I-71 SB TO I-70 EB
RAMP N4	I-70 EB TO I-71 NB
RAMP P4	I-70 WB TO I-71 NB
RAMP P5	I-70 WB TO I-670
RAMP N1	I-70 EB TO PARSONS AVE
RAMP N2	FULTON ST EB (BY WAY OF RAMP N3) TO I-71 NB
RAMP N3	FULTON ST EB TO I-70 EB
RAMP P1	I-70 WB (BY WAY OF RAMP P2) TO PARSONS AVE
RAMP P2	I-70 WB TO MOUND ST WB
RAMP P6	MAIN ST TO I-71 NB/I-670

TEMPORARY ROADWAY DESCRIPTIONS	
PLAN VIEW LABEL	DESCRIPTION
TR-1B	TEMP I-70 EB TO I-71 NB
TR-1D	TEMP I-70 EB
TR-2A	TEMP I-70 EB/WB CONNECTION
TR-2D	TEMP I-70 EB TO I-71 NB
TR-2F	TEMP I-70 EB EXIT TO 18TH ST
TR-2G	TEMP MOOBERRY ST CONNECTION

CALCULATED JAH
CHECKED JML

PHASE 4 - SUMMARY & DISINCENTIVE CHART

FRA-70-14.54

ms consultants, inc.

PLOT.CEL

ms consultants, inc.
msconsultants.com

Ohio DOT Workspace
70\71 East Interchange 2E
PCF: ohdot\V8i
PCF: 60-06634_2E_Columbus

www.msconsultants.com

0 0.5" 1"

34" x 22"

Batchplot Spec: \\msconsultants.com\Files\production\03\60\06634_2E\standards\plotdr\batchplt.spc
Pen Table: \\msconsultants.com\Files\Standards\ustn\ohdot\V8i\ms\plotting\pen\V8i_ms_std.tbl
Plot Driver: \\msconsultants.com\Files\Standards\ustn\ohdot\v8i\ms\plotting\PDF.pltcfg

Model: Sheet View: FENCE_VIEW1
Printed: 9/28/2018 @ 10:26:41 AM By: kryan
File: N:\03\60\06634_2E\mot\sheets\105220MP4040.dgn

NOTES:

1. ALL PAVEMENT MARKINGS ARE EXISTING TO REMAIN OR PLACED IN A PREVIOUS STEP UNLESS OTHERWISE NOTED.

2. ALL DOWNWARD ARROWS ON OVERHEAD SIGNS SHALL BE PLACED OVER THE CENTER OF TRAVEL LANE.

3. THE MAINTENANCE OF TRAFFIC CONFIGURATION ON FULTON STREET AND THIRD STREET SHALL REMAIN AS SHOWN ON THE PHASE 1E PLAN SHEETS, SEE SHEETS 236 - 237, 245.

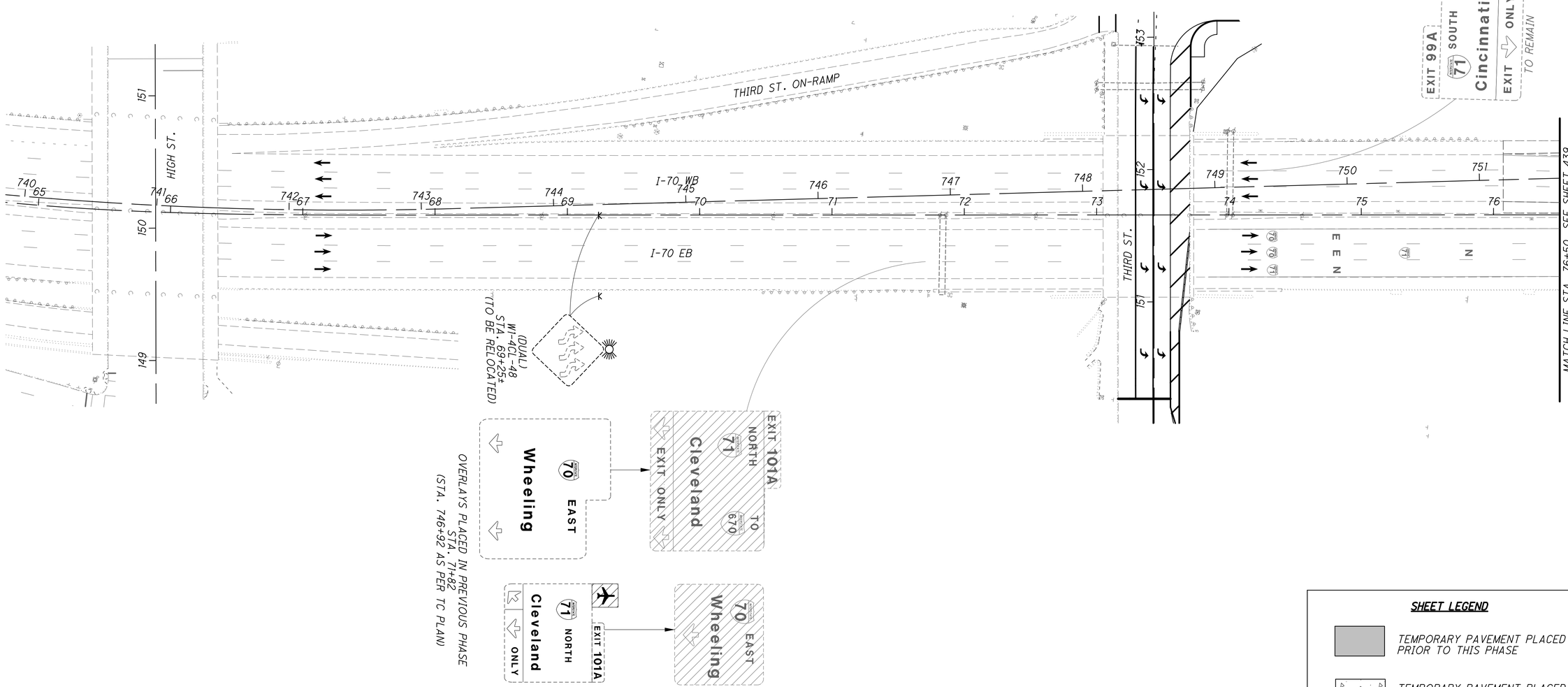

SHEET LEGEND

- TEMPORARY PAVEMENT PLACED PRIOR TO THIS PHASE
- TEMPORARY PAVEMENT PLACED DURING THIS PHASE
- WORK AREA

FOR COMPLETE LEGEND AND DRUM SPACING CHART, SEE SHEET 156

N

0 20 40 80 HORIZONTAL SCALE IN FEET

CALCULATED JAH
CHECKED JML

MAINTENANCE OF TRAFFIC - PHASE 4A-STEP 1
I-70 EB & RAMP CONSTRUCTION

FRA-70-14.54

438
2317

ms consultants, inc.

34" x 22"
Model: Sheet View: FENCE_VIEW1
Printed: 9/28/2018 @ 10:26:45 AM By: kryan
File: N:\03\60\06634_2E\mot\sheets\105322MP4041.dgn
Batchplot Spec: \\msconsultants.com\files\production\03\60\06634_2E\standards\plotdrv\batchplt.spc
Pen Table: \\msconsultants.com\files\Standards\ustn\ohdot\V8i\ms\plotting\pen\V8i_ms_std.tbl
Plot Driver: \\msconsultants.com\files\Standards\ustn\ohdot\v8i\ms\plotting\PDF.pltcfg
PCF: ohdotV8i
PCF: 60-06634_2E_Columbus
Ohio DOT Workspace
70\71 East Interchange 2E
www.msconsultants.com
ms consultants, inc.
msconsultants.com
PLOT.CEL

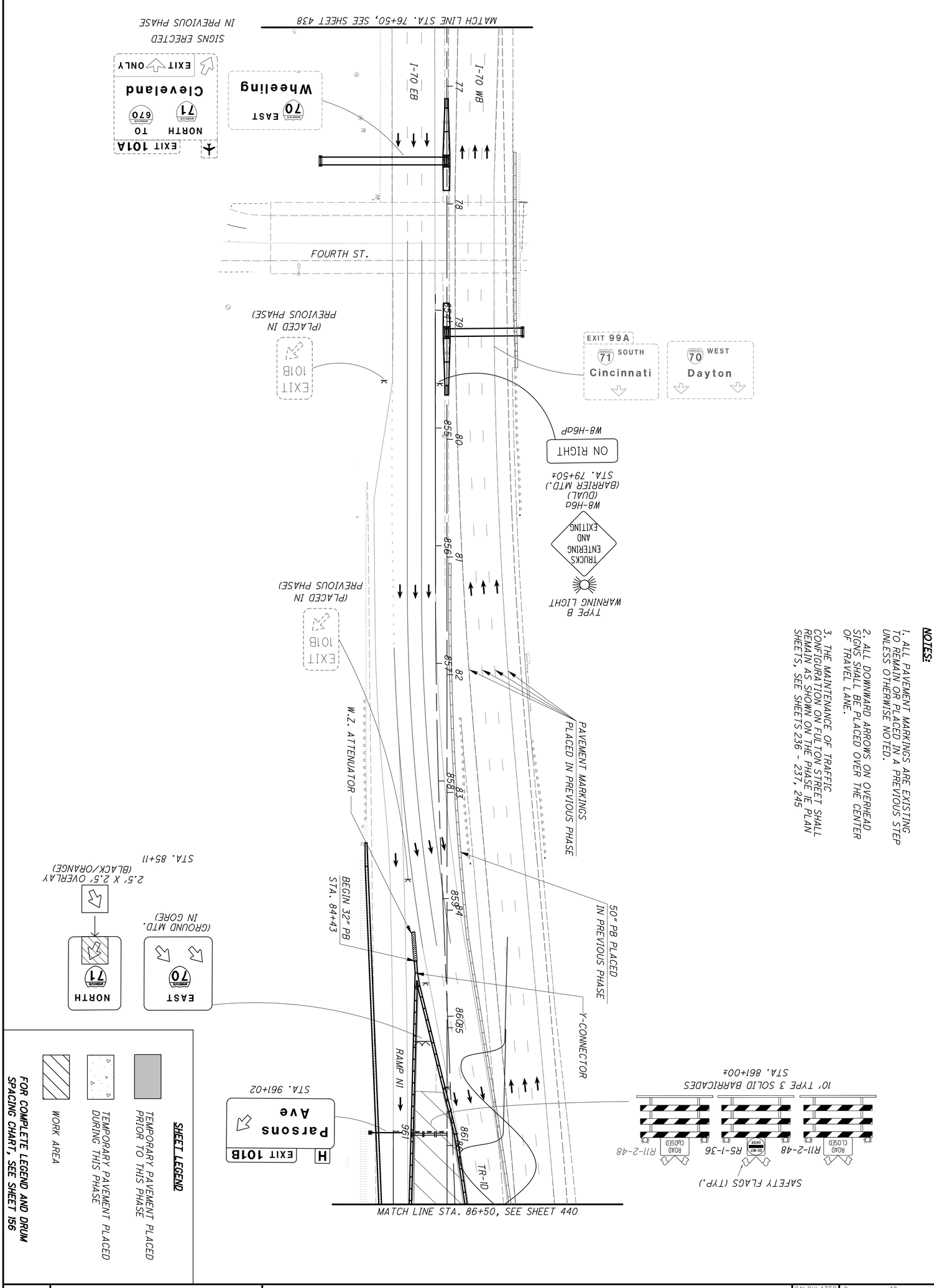

NOTES:

1. ALL PAVEMENT MARKINGS ARE EXISTING TO REMAIN OR PLACED IN A PREVIOUS STEP UNLESS OTHERWISE NOTED.
2. ALL DOWNWARD ARROWS ON OVERHEAD SIGNS SHALL BE PLACED OVER THE CENTER OF TRAVEL LANE.
3. THE MAINTENANCE OF TRAFFIC CONFIGURATION ON FULTON STREET SHALL REMAIN AS SHOWN ON THE PHASE IE PLAN SHEETS, SEE SHEETS 236 - 237, 245

PLOT.CEL

ms consultants, inc.
msconsultants.com

www.msconsultants.com

Ohio DOT Workspace
70\71 East Interchange 2E

0 1" 0.5"

Batchplot Spec: \\msconsultants.com\files\production\03\60\06634_2E\standards\plotdr\batchplt.spc
Pen Table: \\msconsultants.com\files\Standards\usitn\ohdot\V8i\ms\plotting\pen\V8i_ms_std.tbl
Plot Driver: \\msconsultants.com\files\Standards\usitn\ohdot\V8i\ms\plotting\PDF.pltcfg

PCF: ohdot\V8i
PCF: 60-06634_2E_Columbus

Model: Sheet
Printed: 9/28/2018 @ 10:26:53 AM
File: N:\03\60\06634_2E\mot\sheets\05322MP4042.dgn

View: FENCE_VIEW1
By: kryan

34" x 22"

NOTES:

1. ALL PAVEMENT MARKINGS ARE EXISTING TO REMAIN OR PLACED IN A PREVIOUS STEP UNLESS OTHERWISE NOTED.

2. THE MAINTENANCE OF TRAFFIC CONFIGURATION ON FULTON STREET SHALL REMAIN AS SHOWN ON THE PHASE 2A PLAN SHEETS, SEE SHEETS 236 - 237, 245.

3. PROVIDE ACCESS POINT IN ACCORDANCE WITH MT-103.10. RELOCATE THE ACCESS POINT, AS NEEDED, WITH THE ENGINEER'S APPROVAL, TO COMPLETE ALL CONSTRUCTION ACTIVITIES.

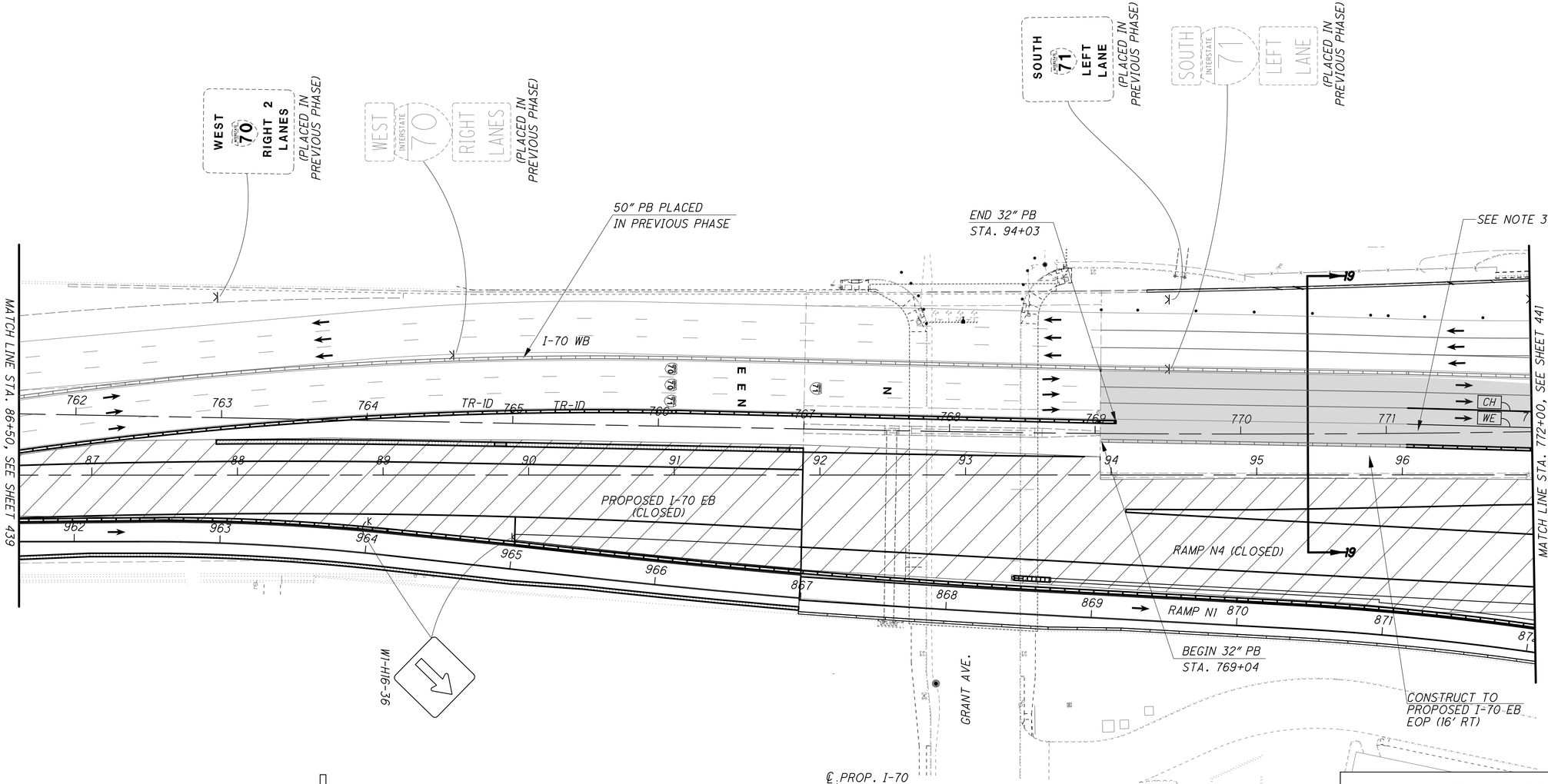

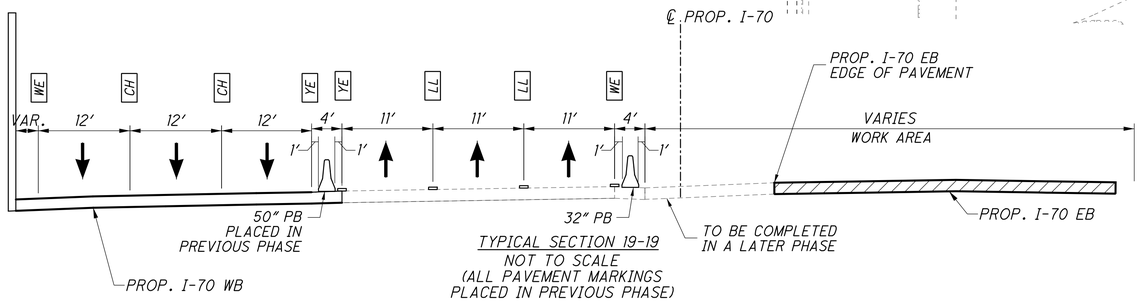

TYPICAL SECTION 19-19
NOT TO SCALE
(ALL PAVEMENT MARKINGS PLACED IN PREVIOUS PHASE)

SHEET LEGEND

- TEMPORARY PAVEMENT PLACED PRIOR TO THIS PHASE
- TEMPORARY PAVEMENT PLACED DURING THIS PHASE
- WORK AREA

FOR COMPLETE LEGEND AND DRUM SPACING CHART, SEE SHEET 156

N

0 20 40 80 HORIZONTAL SCALE IN FEET

CALCULATED JAH
CHECKED JML

MAINTENANCE OF TRAFFIC - PHASE 4A-STEP 1
I-70 EB & RAMP C CONSTRUCTION

FRA-70-14.54

440
2317

ms consultants, inc.

PLOT.CEL

ms consultants, inc.
msconsultants.com

ms consultants, inc.
www.msconsultants.com

Ohio DOT Workspace
70\71 East Interchange 2E

0 0.5" 1"

Batchplot Spec: \\msconsultants.com\Files\Production\03\60\06634_2E\standards\plotdrv\batchplt.spc
Pen Table: \\msconsultants.com\Files\Standards\ustn\ohdot\V8i\ms\plotting\pen\V8i_ms_std.tbl
Plot Driver: \\msconsultants.com\Files\Standards\ustn\ohdot\v8i\ms\plotting\PDF.pltcfg

PDF: ohdot\V8i
PDF: 60-06634_2E_Columbus

34" x 22"

View: FENCE_VIEW1
By: kryan

Model: Sheet
Printed: 9/28/2018 @ 10:26:59 AM
File: N:\03\60\06634_2E\mot\sheets\105322MP4043.dgn

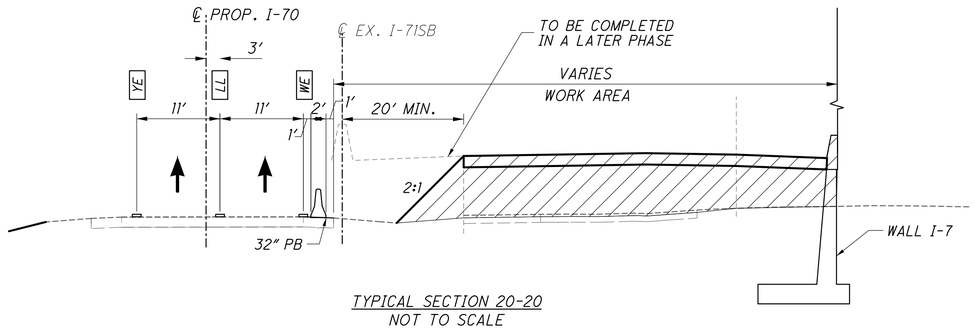

TYPICAL SECTION 20-20
NOT TO SCALE

NOTES:

1. ALL PAVEMENT MARKINGS ARE EXISTING TO REMAIN OR PLACED IN A PREVIOUS STEP UNLESS OTHERWISE NOTED.
2. THE MAINTENANCE OF TRAFFIC CONFIGURATION ON FULTON STREET SHALL REMAIN AS SHOWN ON THE PHASE 1E PLAN SHEETS, SEE SHEETS 236 - 237, 245.
3. PROVIDE ACCESS POINT IN ACCORDANCE WITH MT-103.10. RELOCATE THE ACCESS POINT, AS NEEDED, WITH THE ENGINEER'S APPROVAL, TO COMPLETE ALL CONSTRUCTION ACTIVITIES.

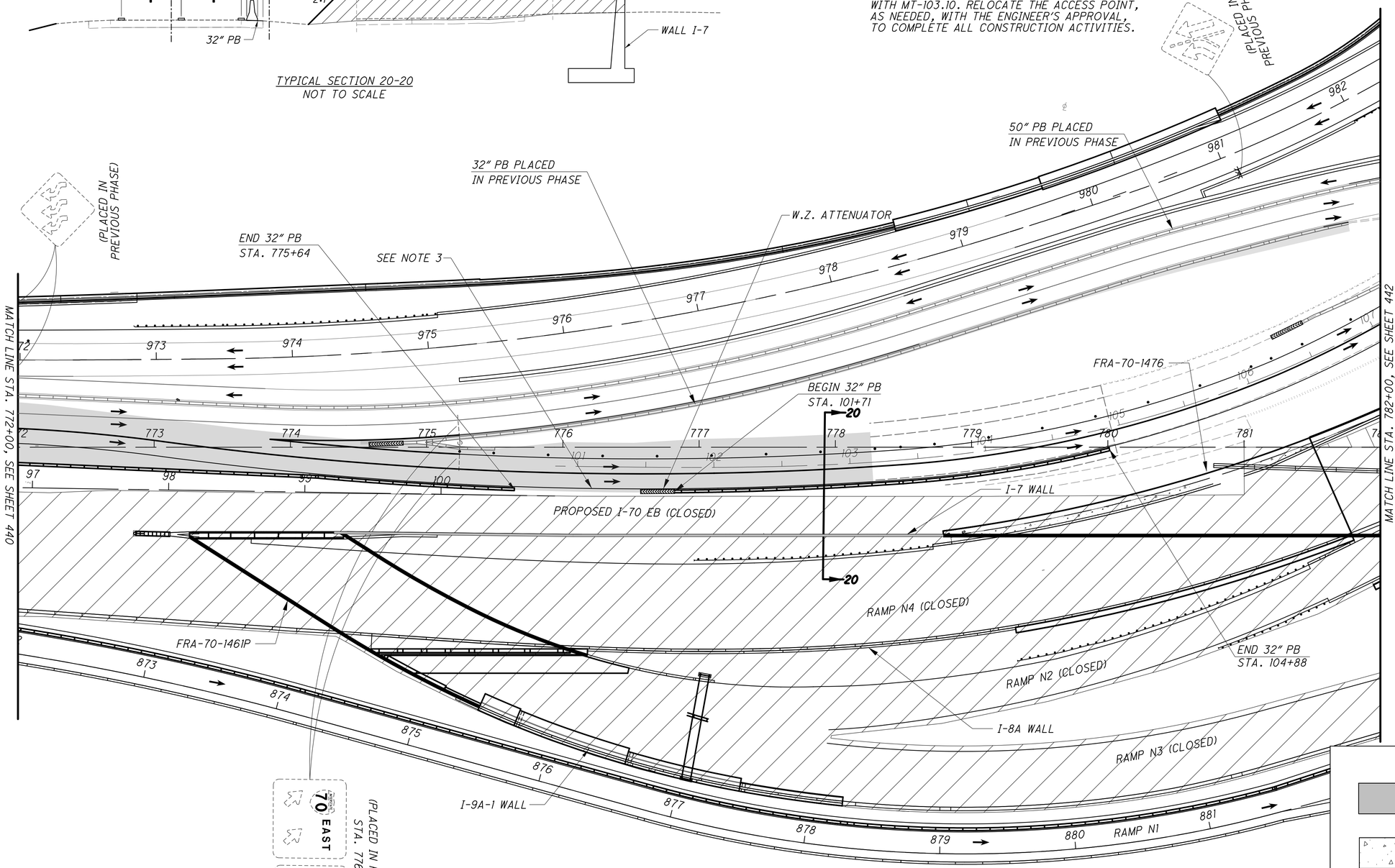

SHEET LEGEND

- TEMPORARY PAVEMENT PLACED PRIOR TO THIS PHASE
- TEMPORARY PAVEMENT PLACED DURING THIS PHASE
- WORK AREA

FOR COMPLETE LEGEND AND DRUM SPACING CHART, SEE SHEET 156

N

0 20 40 80 HORIZONTAL SCALE IN FEET

CALCULATED JAH
CHECKED JML

MAINTENANCE OF TRAFFIC - PHASE 4A-STEP 1
I-70 EB & RAMP CONSTRUCTION

FRA-70-14.54

441
2317

PLOT.CEL

ms consultants, inc.
msconsultants.com

www.msconsultants.com

Ohio DOT Workspace
70\71 East Interchange 2E

Batchplot Spec: \\msconsultants.com\files\production\03\60\06634_2E\standards\plotdrv\batchplt.spc
Pen Table: \\msconsultants.com\files\Standards\usin\ohdot\V8i\ms\plotting\pen\V8i_ms_std.tbl PDF: ohdotV8i
Plot Driver: \\msconsultants.com\files\Standards\usin\ohdot\V8i\ms\plotting\PDF: 60-06634_2E_Columbus

Model: Sheet View: FENCE_VIEW1
Printed: 9/28/2018 @ 10:27:05 AM By: kryan
File: N:\03\60\06634_2E\mot\sheets\105220MP404.dgn

34" x 22"

NOTE

1. ALL PAVEMENT MARKINGS ARE EXISTING TO REMAIN OR PLACED IN A PREVIOUS STEP UNLESS OTHERWISE NOTED.

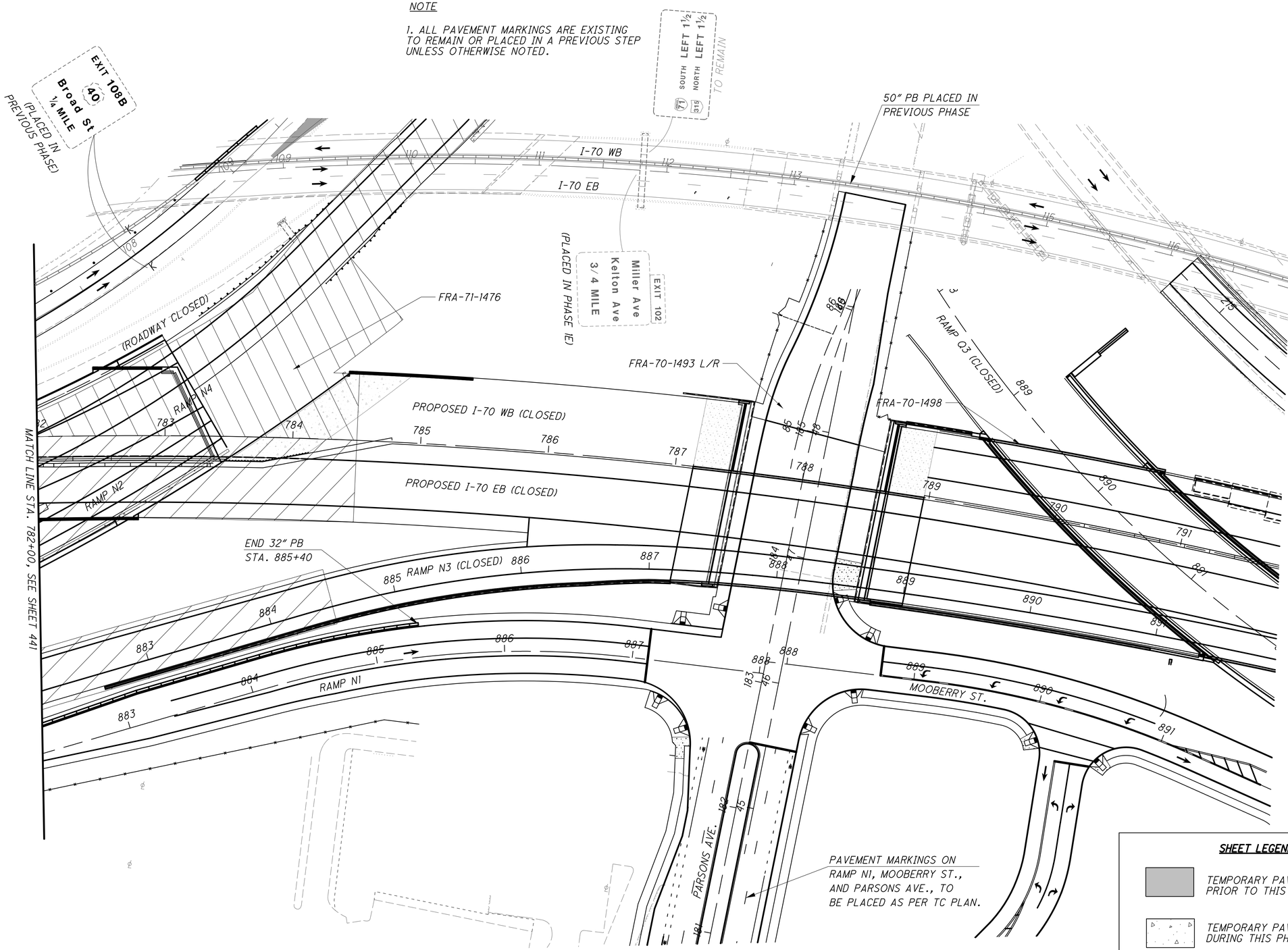

SHEET LEGEND

- TEMPORARY PAVEMENT PLACED PRIOR TO THIS PHASE
- TEMPORARY PAVEMENT PLACED DURING THIS PHASE
- WORK AREA

FOR COMPLETE LEGEND AND DRUM SPACING CHART, SEE SHEET 156

HORIZONTAL SCALE IN FEET
0 20 40 80

CALCULATED JAH
CHECKED JML

MAINTENANCE OF TRAFFIC - PHASE 4A-STEP 1
I-70 EB & RAMP CONSTRUCTION

FRA-70-14.54

442
2317

PLOT.CEL

ms consultants, inc.
msconsultants.com

www.msconsultants.com

Ohio DOT Workspace
70\71 East Interchange 2E

0 0.5" 1"

34" x 22"

Batchplot Spec: \\msconsultants.com\Files\Production\03\60\06634_2E\standards\plotdrv\batchplt.spc
Pen Table: \\msconsultants.com\Files\Standards\ustn\ohdot\V8i\ms\plotting\pen\V8i_ms_std.tbl
Plot Driver: \\msconsultants.com\Files\Standards\ustn\ohdot\V8i\ms\plotting\PDF.pltcfg

PDF: ohdotV8i
PCF: 60-06634_2E_Columbus

Model: Sheet
Printed: 9/28/2018 @ 10:27:15 AM
File: N:\03\60\06634_2E\mot\sheets\105322MP4050.dgn

View: FENCE_VIEW1
By: kryan

NOTES:

1. ALL PAVEMENT MARKINGS ARE EXISTING TO REMAIN OR PLACED IN A PREVIOUS STEP UNLESS OTHERWISE NOTED.

2. ALL DOWNWARD ARROWS ON OVERHEAD SIGNS SHALL BE PLACED OVER THE CENTER OF TRAVEL LANE.

3. THE MAINTENANCE OF TRAFFIC CONFIGURATION ON FULTON STREET AND THIRD STREET SHALL REMAIN AS SHOWN ON THE PHASE 1E PLAN SHEETS, SEE SHEETS 236 - 237, 245.

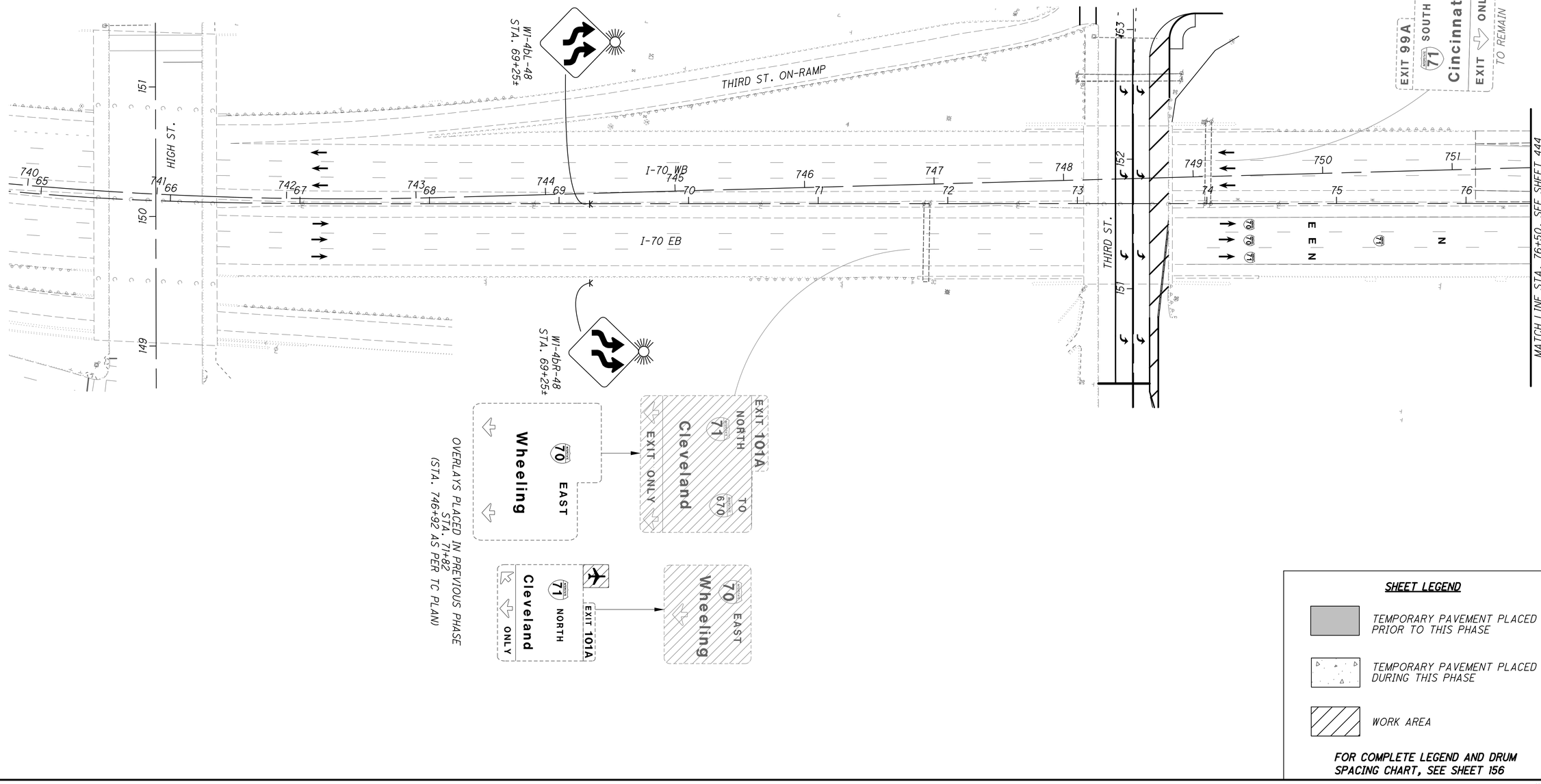

SHEET LEGEND

- TEMPORARY PAVEMENT PLACED PRIOR TO THIS PHASE
- TEMPORARY PAVEMENT PLACED DURING THIS PHASE
- WORK AREA

FOR COMPLETE LEGEND AND DRUM SPACING CHART, SEE SHEET 156

0 20 40 80
HORIZONTAL SCALE IN FEET

CALCULATED JAH
CHECKED JML

MAINTENANCE OF TRAFFIC - PHASE 4A-STEP 2
I-70 EB & RAMP CONSTRUCTION

FRA-70-14.54

443
2317

PLOT.CEL

ms consultants, inc.
msconsultants.com

www.msconsultants.com

Ohio DOT Workspace
70\71 East Interchange 2E

0 0.5" 1"

Batchlot Spec: \\msconsultants.com\Files\production\03\60\06634_2E\standards\plotdrv\batchplt.spc
Pen Table: \\msconsultants.com\Files\Standards\usfn\ohdot\V8i\ms\plotting\pen\V8i_ms_std.tbl
Plot Driver: \\msconsultants.com\Files\Standards\usfn\ohdot\V8i\ms\plotting\PDF.pltcfg

PCF: ohdot\V8i
PCF: 60-06634_2E_Columbus

Model: Sheet
Printed: 9/28/2018 @ 10:27:22 AM
File: N:\03\60\06634_2E\mot\sheets\103220MP401.dgn

View: FENCE_VIEW1
By: kryan

34" x 22"

NOTES:

1. ALL PAVEMENT MARKINGS ARE EXISTING TO REMAIN OR PLACED IN A PREVIOUS STEP UNLESS OTHERWISE NOTED.

2. ALL DOWNWARD ARROWS ON OVERHEAD SIGNS SHALL BE PLACED OVER THE CENTER OF TRAVEL LANE.

3. THE MAINTENANCE OF TRAFFIC CONFIGURATION ON FULTON STREET SHALL REMAIN AS SHOWN ON THE PHASE 1E PLAN SHEETS, SEE SHEETS 236 - 237, 245.

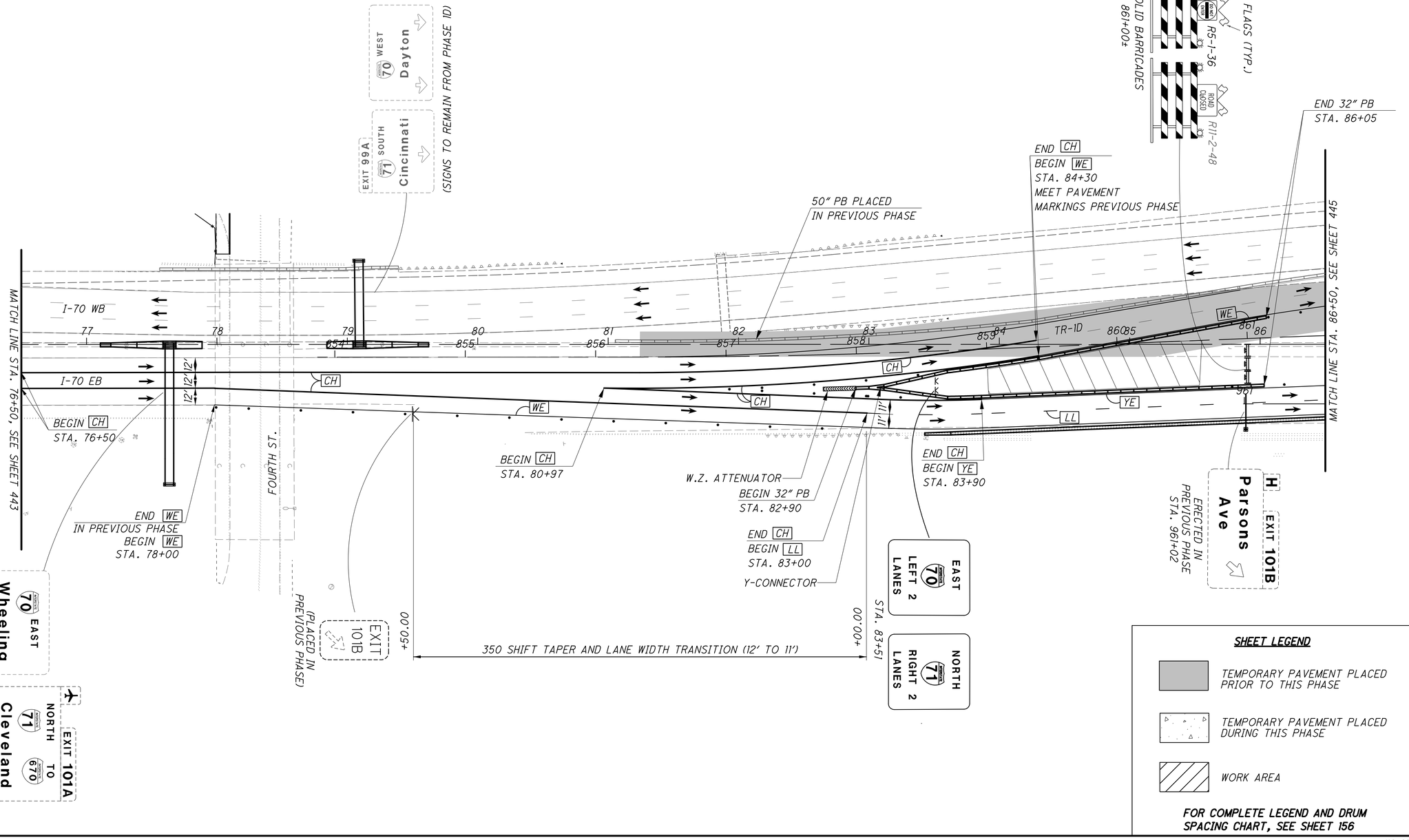

SHEET LEGEND

- TEMPORARY PAVEMENT PLACED PRIOR TO THIS PHASE
- TEMPORARY PAVEMENT PLACED DURING THIS PHASE
- WORK AREA

FOR COMPLETE LEGEND AND DRUM SPACING CHART, SEE SHEET 156

HORIZONTAL SCALE IN FEET
0 20 40 80

CALCULATED JAH
CHECKED JML

MAINTENANCE OF TRAFFIC - PHASE 4A-STEP 2
I-70 EB & RAMP CONSTRUCTION

FRA-70-14.54

444
2317

PLOT.CEL

ms consultants, inc.
msconsultants.com

ms consultants, inc.
www.msconsultants.com

Ohio DOT Workspace
70\71 East Interchange 2E

Batchplot Spec: \\msconsultants.com\files\production\03\60\06634_2E\standards\plotdrv\batchplt.spc
Pen Table: \\msconsultants.com\files\Standards \ustn\ohdot\V8i\ms\plotting\pen\V8i_ms_std.tbl
Plot Driver: \\msconsultants.com\files\Standards \ustn\ohdot\V8i\ms\plotting\PDF.pltcfg

PDF: ohdot\V8i
PCF: 60-06634_2E_Columbus

0 1" 0.5"

34" x 22"

Model: Sheet
Printed: 9/28/2018 @ 10:27:28 AM
File: N:\03\60\06634_2E\mot\sheets\105322MP4052.dgn

View: FENCE_VIEW1
By: kryan

NOTES:

1. ALL PAVEMENT MARKINGS ARE EXISTING TO REMAIN OR PLACED IN A PREVIOUS STEP UNLESS OTHERWISE NOTED.

2. THE MAINTENANCE OF TRAFFIC CONFIGURATION ON FULTON STREET SHALL REMAIN AS SHOWN ON THE PHASE 1E PLAN SHEETS, SEE SHEETS 236 - 237, 245.

3. SIGNING AND PAVEMENT MARKINGS ON GRANT AVENUE SHALL REMAIN IN SAME CONFIGURATION AS SHOWN IN FULTON STREET CONSTRUCTION.

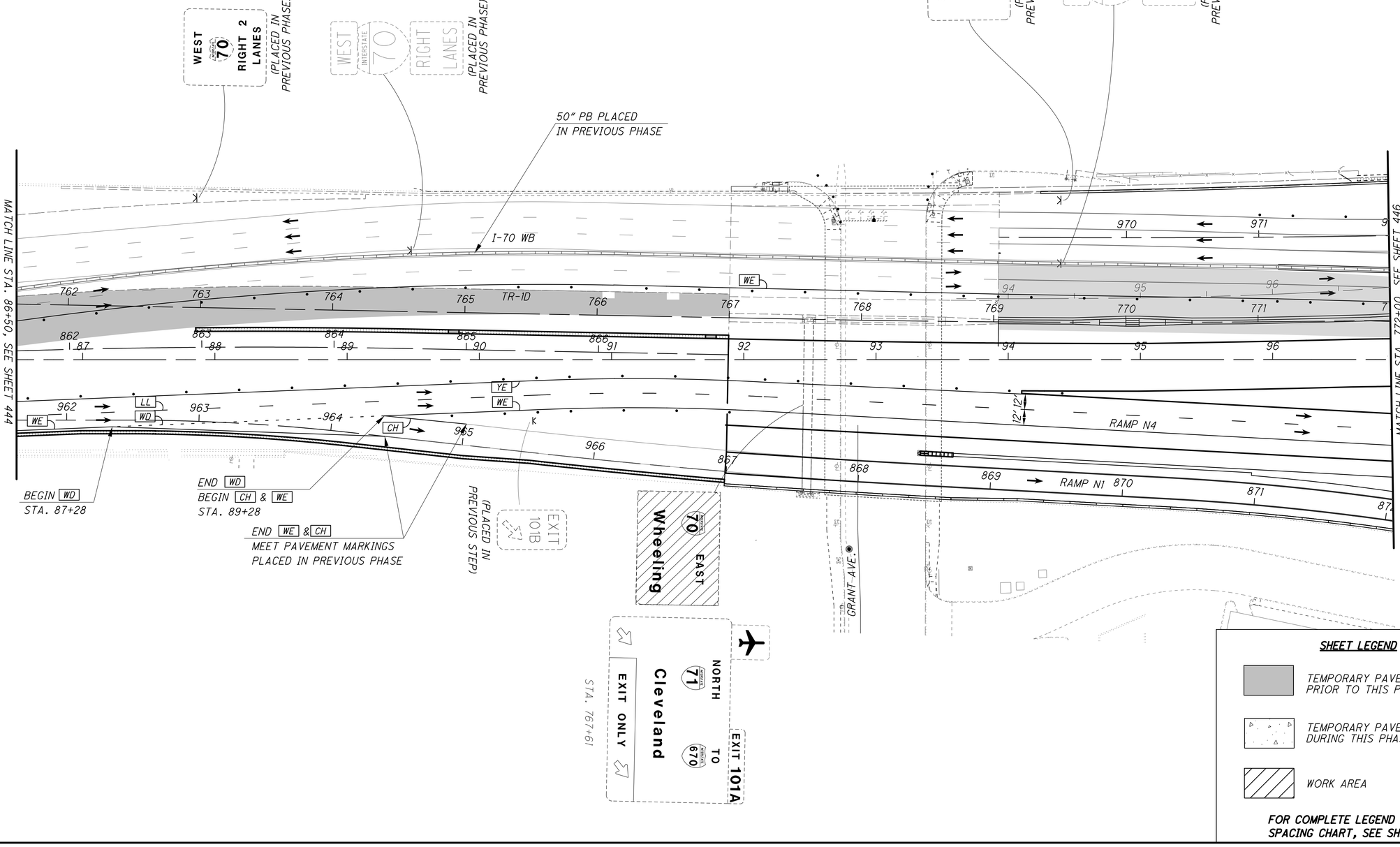

SHEET LEGEND

- TEMPORARY PAVEMENT PLACED PRIOR TO THIS PHASE
- TEMPORARY PAVEMENT PLACED DURING THIS PHASE
- WORK AREA

FOR COMPLETE LEGEND AND DRUM SPACING CHART, SEE SHEET 156

N

0 20 40 80 HORIZONTAL SCALE IN FEET

CALCULATED JAH
CHECKED JML

MAINTENANCE OF TRAFFIC - PHASE 4A-STEP 2
I-70 EB & RAMP CONSTRUCTION

FRA-70-14.54

445
2317

ms consultants, inc.

PLOT.CEL

ms consultants, inc.
msconsultants.com

www.msconsultants.com

Ohio DOT Workspace
70\71 East Interchange 2E

1"
0.5"
0

Batchplot Spec: \\msconsultants.com\Files\production\03\60\06634_2E\standards\plotdrv\batchplt.spc
Pen Table: \\msconsultants.com\Files\Standards\astm\ohdot\V8i\ms\plotting\pen\V8i_ms_std.tbl
Plot Driver: \\msconsultants.com\Files\Standards\astm\ohdot\V8i\ms\plotting\PDF.pltcfg

DGN: ohdot\V8i
DCF: 60-06634_2E_Columbus

Model: Sheet
Printed: 9/28/2018 @ 10:27:34 AM
File: N:\03\60\06634_2E\mot\sheets\105322MP4053.dgn

View: FENCE_VIEW1
By: kryan

34" x 22"

NOTES:

1. ALL PAVEMENT MARKINGS ARE EXISTING TO REMAIN OR PLACED IN A PREVIOUS STEP UNLESS OTHERWISE NOTED.

2. THE MAINTENANCE OF TRAFFIC CONFIGURATION ON FULTON STREET SHALL REMAIN AS SHOWN ON THE PHASE 1E PLAN SHEETS, SEE SHEETS 236 - 237, 245.

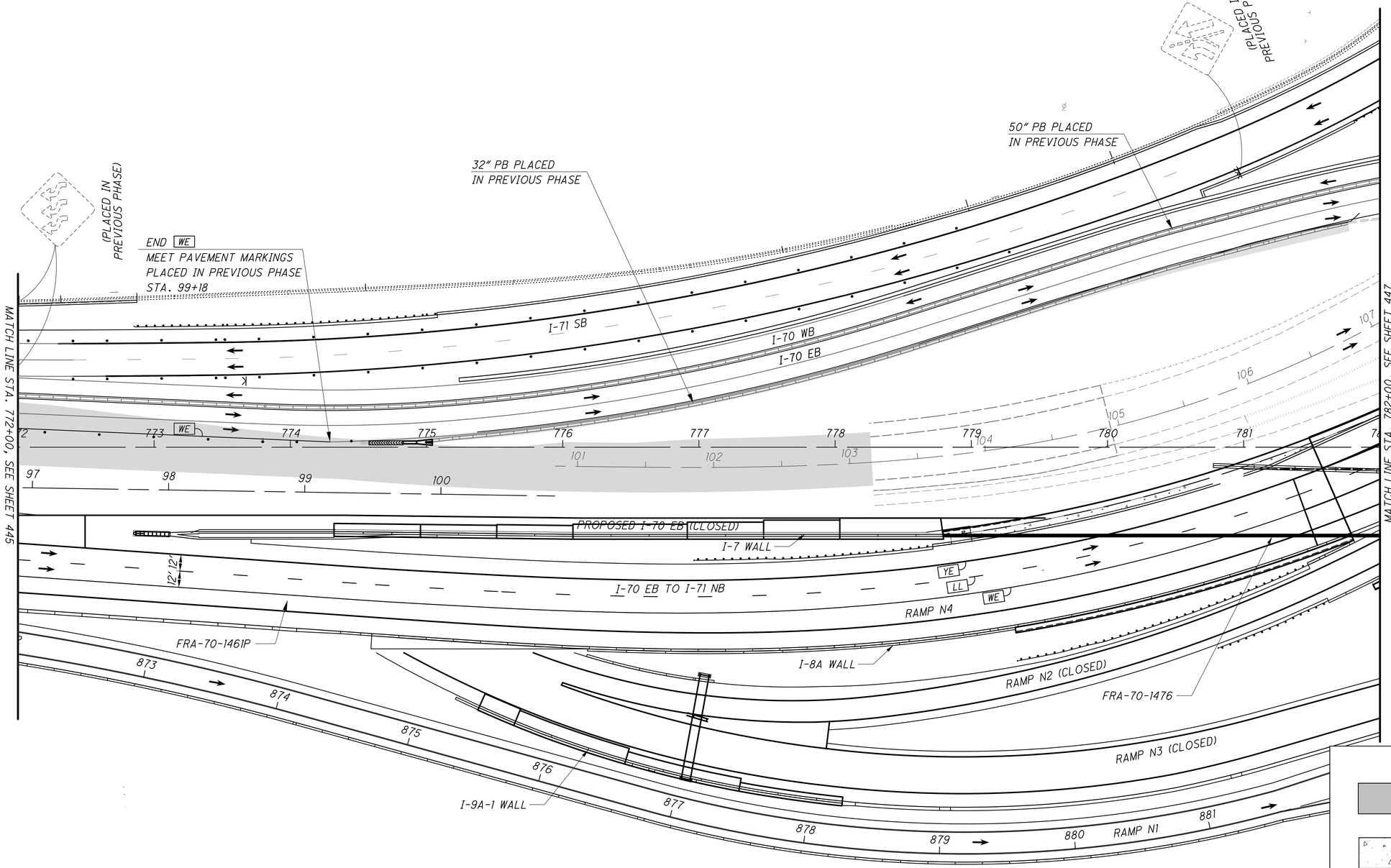

SHEET LEGEND

TEMPORARY PAVEMENT PLACED PRIOR TO THIS PHASE

TEMPORARY PAVEMENT PLACED DURING THIS PHASE

WORK AREA

FOR COMPLETE LEGEND AND DRUM SPACING CHART, SEE SHEET 156

N

0 20 40 80
HORIZONTAL SCALE IN FEET

CALCULATED JAH
CHECKED JML

MAINTENANCE OF TRAFFIC - PHASE 4A-STEP 2
I-70 EB & RAMP CONSTRUCTION

FRA-70-14.54

446
2317

ms consultants, inc.

PLOT.CEL

ms consultants, inc.
msconsultants.com

ms consultants, inc.
www.msconsultants.com

Ohio DOT Workspace
70\71 East Interchange 2E

1"
0
0.5"

Batchplot Spec: \\msconsultants.com\Files\Production\03\60\06634_2E\standards\plotdrv\batchplt.spc
Pen Table: \\msconsultants.com\Files\Standards\ustn\ohdot\V8i\ms\plotting\pen\V8i_ms_std.tbl
Plot Driver: \\msconsultants.com\Files\Standards\ustn\ohdot\v8i\ms\plotting\PDF.pltcfg
PCF: ohdotV8i
PCF: 60-06634_2E_Columbus

Model: Sheet
Printed: 9/28/2018 @ 10:27:40 AM
File: N:\03\60\06634_2E\mot\sheets\105322MP4054.dgn
View: FENCE_VIEW1
By: kryan
34" x 22"

NOTE

1. ALL PAVEMENT MARKINGS ARE EXISTING TO REMAIN OR PLACED IN A PREVIOUS STEP UNLESS OTHERWISE NOTED.

END YE, WE & LL
MEET EXISTING
PAVEMENT MARKINGS
STA. 694+18

SOUTH LEFT 1½ (T1) 515
NORTH LEFT 1½ TO REMAIN

50" PB PLACED IN PREVIOUS PHASE

I-70 WB
I-70 EB

FRA-70-1476

Miller Ave
Kelton Ave
3/4 MILE
EXIT 102
(PLACED IN PHASE 1E)

FRA-70-1493 L/R

FRA-70-1498

RAMP Q3 (CLOSED)

PROPOSED I-70 WB (CLOSED)

PROPOSED I-70 EB (CLOSED)

RAMP N2

RAMP N3 (CLOSED)

RAMP N1

MOOBERRY ST.

PARSONS AVE.

MATCH LINE STA. 782+00, SEE SHEET 446

SHEET LEGEND

- TEMPORARY PAVEMENT PLACED PRIOR TO THIS PHASE
- TEMPORARY PAVEMENT PLACED DURING THIS PHASE
- WORK AREA

FOR COMPLETE LEGEND AND DRUM SPACING CHART, SEE SHEET 156

HORIZONTAL SCALE IN FEET
0 20 40 80

CALCULATED JAH
CHECKED JML

MAINTENANCE OF TRAFFIC - PHASE 4A-STEP 2
I-70 EB & RAMP CONSTRUCTION

FRA-70-14.54

447
2317

PLOT.CEL

ms consultants, inc.
msconsultants.com

Ohio DOT Workspace
70\71 East Interchange 2E

www.msconsultants.com

NOTES:

1. ALL PAVEMENT MARKINGS ARE EXISTING TO REMAIN OR PLACED IN A PREVIOUS STEP UNLESS OTHERWISE NOTED.

2. ALL DOWNWARD ARROWS ON OVERHEAD SIGNS SHALL BE PLACED OVER THE CENTER OF TRAVEL LANE.

3. THE MAINTENANCE OF TRAFFIC CONFIGURATION ON FULTON STREET AND THIRD STREET SHALL REMAIN AS SHOWN ON THE PHASE 1E PLAN SHEETS, SEE SHEETS 236 - 237, 245.

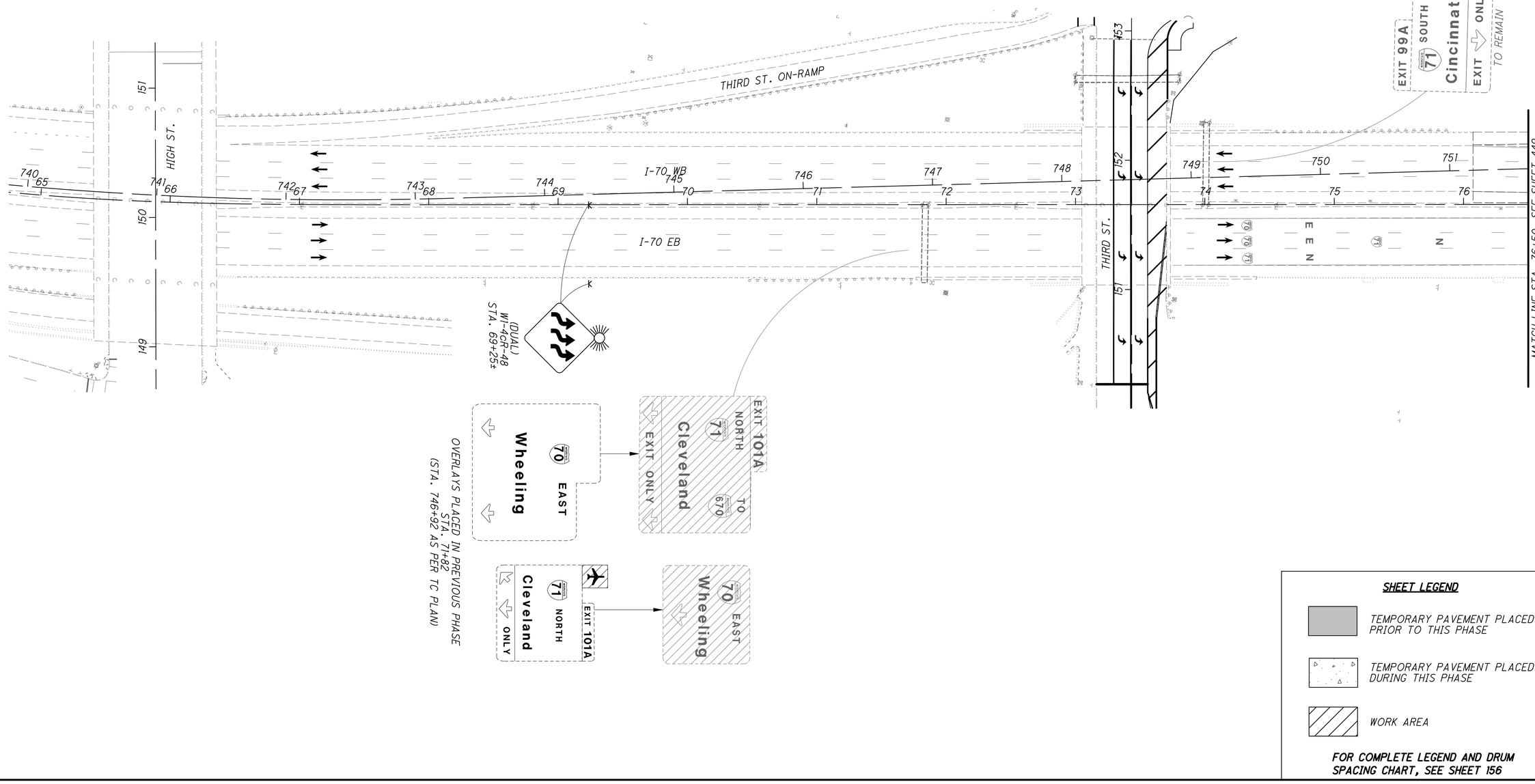

SHEET LEGEND

- TEMPORARY PAVEMENT PLACED PRIOR TO THIS PHASE
- TEMPORARY PAVEMENT PLACED DURING THIS PHASE
- WORK AREA

FOR COMPLETE LEGEND AND DRUM SPACING CHART, SEE SHEET 156

HORIZONTAL SCALE IN FEET
0 20 40 80

CALCULATED JAH
CHECKED JML

MAINTENANCE OF TRAFFIC - PHASE 4A-STEP 3
I-70 EB & RAMP CONSTRUCTION

FRA-70-14.54

448
2317

ms consultants, inc.

Batchplot Spec: \\msconsultants.com\Files\production\03\60\06634_2E\standards\plotdrv\batchpl.spc
Pen Table: \\msconsultants.com\Files\Standards\ustn\ohdot\V8i\ms\plotting\pen\V8i_ms_std.tbl
Plot Driver: \\msconsultants.com\Files\Standards\ustn\ohdot\v8i\ms\plotting\PDF.pltcfg
PDF: ohdot\V8i
DCF: 60-06634_2E_Columbus

34" x 22"

Model: Sheet
Printed: 9/28/2018 @ 10:27:50 AM
File: N:\03\60\06634_2E\mot\sheets\105322MP4060.dgn
View: FENCE_VIEW1
By: kryan

PLOT.CEL

ms consultants, inc.
msconsultants.com

www.msconsultants.com

Ohio DOT Workspace
70\71 East Interchange 2E

0 0.5" 1"

Batchplot Spec: \\msconsultants.com\Files\production\03\60\06634_2E\standards\plotdr\batchplt.spc
Pen Table: \\msconsultants.com\Files\Standards\ustn\ohdot\V8i\ms\plotting\pen\V8i_ms_std.tbl
Plot Driver: \\msconsultants.com\Files\Standards\ustn\ohdot\V8i\ms\plotting\PDF.pltcfg

Model: Sheet
Printed: 9/28/2018 @ 10:27:54 AM
File: N:\03\60\06634_2E\mot\sheets\1053220MP4061.dgn

View: FENCE_VIEW1
By: kryan

34" x 22"

NOTES:

1. ALL PAVEMENT MARKINGS ARE EXISTING TO REMAIN OR PLACED IN A PREVIOUS STEP UNLESS OTHERWISE NOTED.

2. ALL DOWNWARD ARROWS ON OVERHEAD SIGNS SHALL BE PLACED OVER THE CENTER OF TRAVEL LANE.

3. THE MAINTENANCE OF TRAFFIC CONFIGURATION ON FULTON STREET SHALL REMAIN AS SHOWN ON THE PHASE 1E PLAN SHEETS, SEE SHEETS 236 - 237, 245.

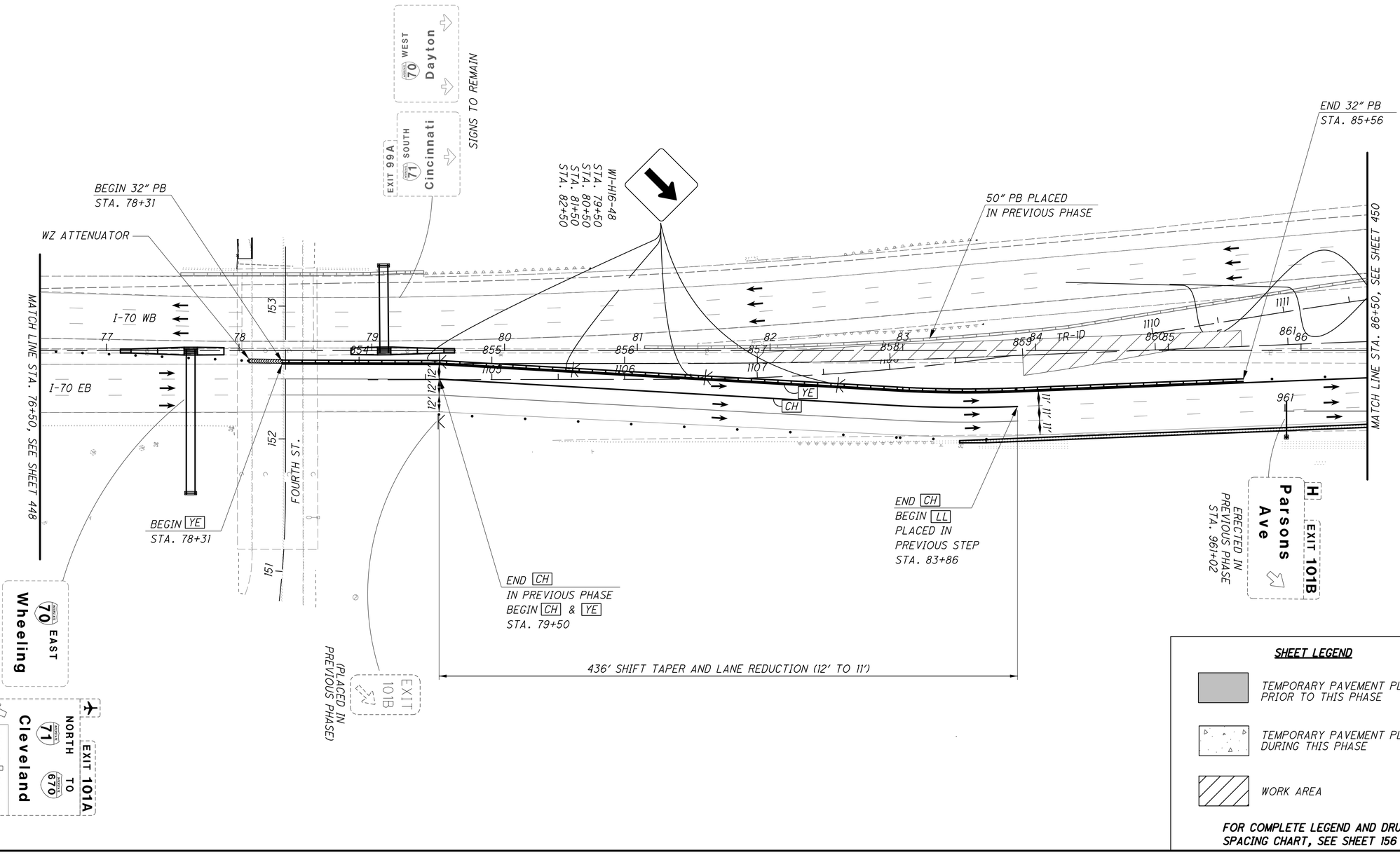

SHEET LEGEND

- TEMPORARY PAVEMENT PLACED PRIOR TO THIS PHASE
- TEMPORARY PAVEMENT PLACED DURING THIS PHASE
- WORK AREA

FOR COMPLETE LEGEND AND DRUM SPACING CHART, SEE SHEET 156

0 20 40 80
HORIZONTAL SCALE IN FEET

CALCULATED JAH
CHECKED JML

MAINTENANCE OF TRAFFIC - PHASE 4A-STEP 3
I-70 EB & RAMP CONSTRUCTION

FRA-70-14.54

449
2317

PLOT.CEL

ms consultants, inc.
msconsultants.com

Ohio DOT Workspace
70\71 East Interchange 2E

www.msconsultants.com

0 0.5" 1"

Batchplot Spec: \\msconsultants.com\files\production\03\60\06634.2E\standards\plotdrv\batchplt.spc
Pen Table: \\msconsultants.com\files\Standards\usth\ohdot\V8i\ms\plotting\pen\V8i_ms_std.tbl
Plot Driver: \\msconsultants.com\files\Standards\usth\ohdot\v8i\ms\plotting\PDF.pltcfg

PDF: ohdot\V8i
PDF: 60-06634_2E_Columbus

34" x 22"

Model: Sheet View: FENCE_VIEW1
Printed: 9/28/2018 @ 10:27:57 AM By: kryan
File: N:\03\60\06634_2E\mot\Sheets\105322MP4002.dgn

NOTES:

1. ALL PAVEMENT MARKINGS ARE EXISTING TO REMAIN OR PLACED IN A PREVIOUS STEP UNLESS OTHERWISE NOTED.

2. THE MAINTENANCE OF TRAFFIC CONFIGURATION ON FULTON STREET SHALL REMAIN AS SHOWN ON THE PHASE 1E PLAN SHEETS, SEE SHEETS 236 - 237, 245.

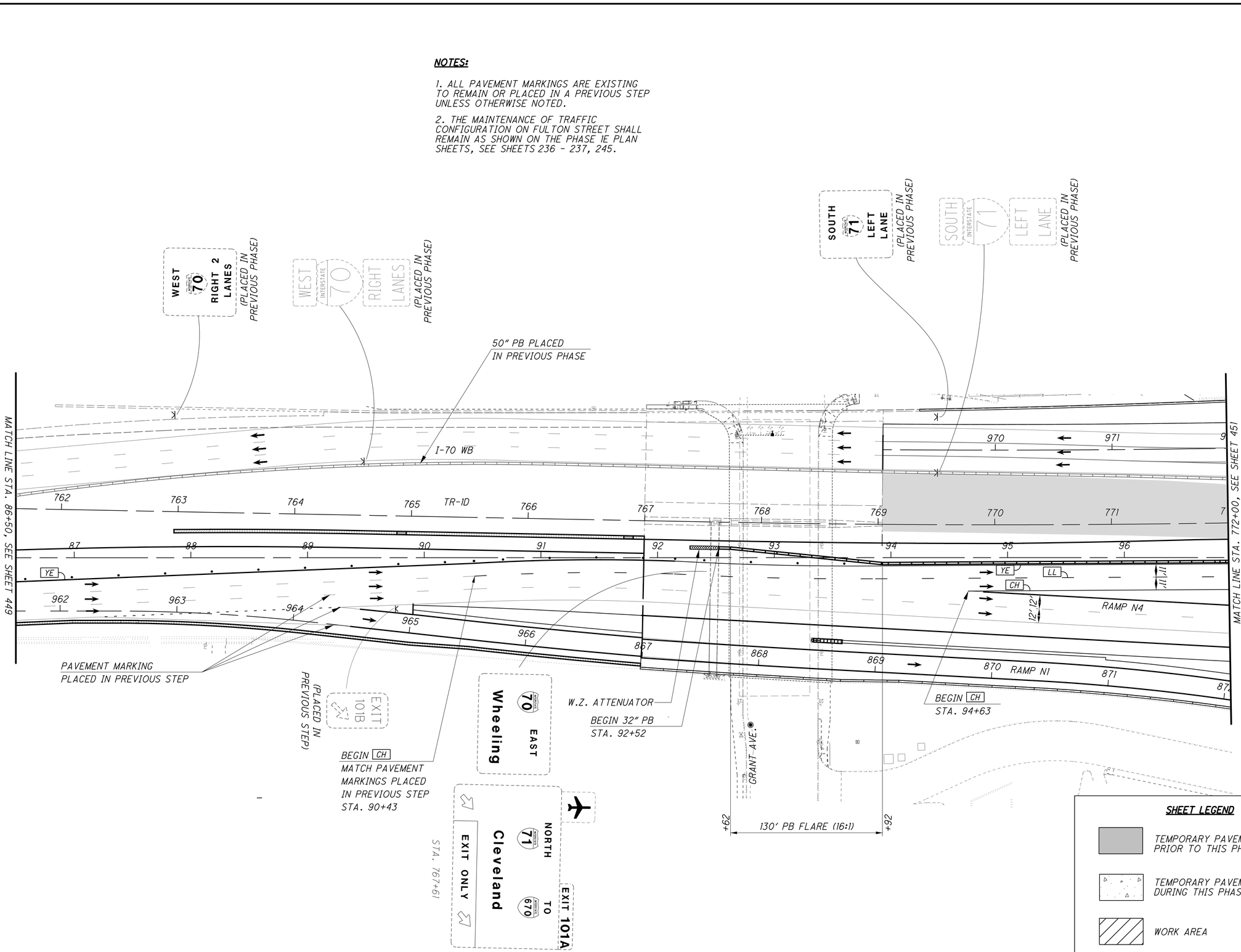

SHEET LEGEND

- TEMPORARY PAVEMENT PLACED PRIOR TO THIS PHASE
- TEMPORARY PAVEMENT PLACED DURING THIS PHASE
- WORK AREA

FOR COMPLETE LEGEND AND DRUM SPACING CHART, SEE SHEET 156

HORIZONTAL SCALE IN FEET
0 20 40 80

CALCULATED JAH
CHECKED JML

MAINTENANCE OF TRAFFIC - PHASE 4A-STEP 3
I-70 EB & RAMP CONSTRUCTION

FRA-70-14.54

450
2317

NOTES:

1. ALL PAVEMENT MARKINGS ARE EXISTING TO REMAIN OR PLACED IN A PREVIOUS STEP UNLESS OTHERWISE NOTED.

2. THE MAINTENANCE OF TRAFFIC CONFIGURATION ON FULTON STREET SHALL REMAIN AS SHOWN ON THE PHASE 2A PLAN SHEETS, SEE SHEETS 373 - 376.

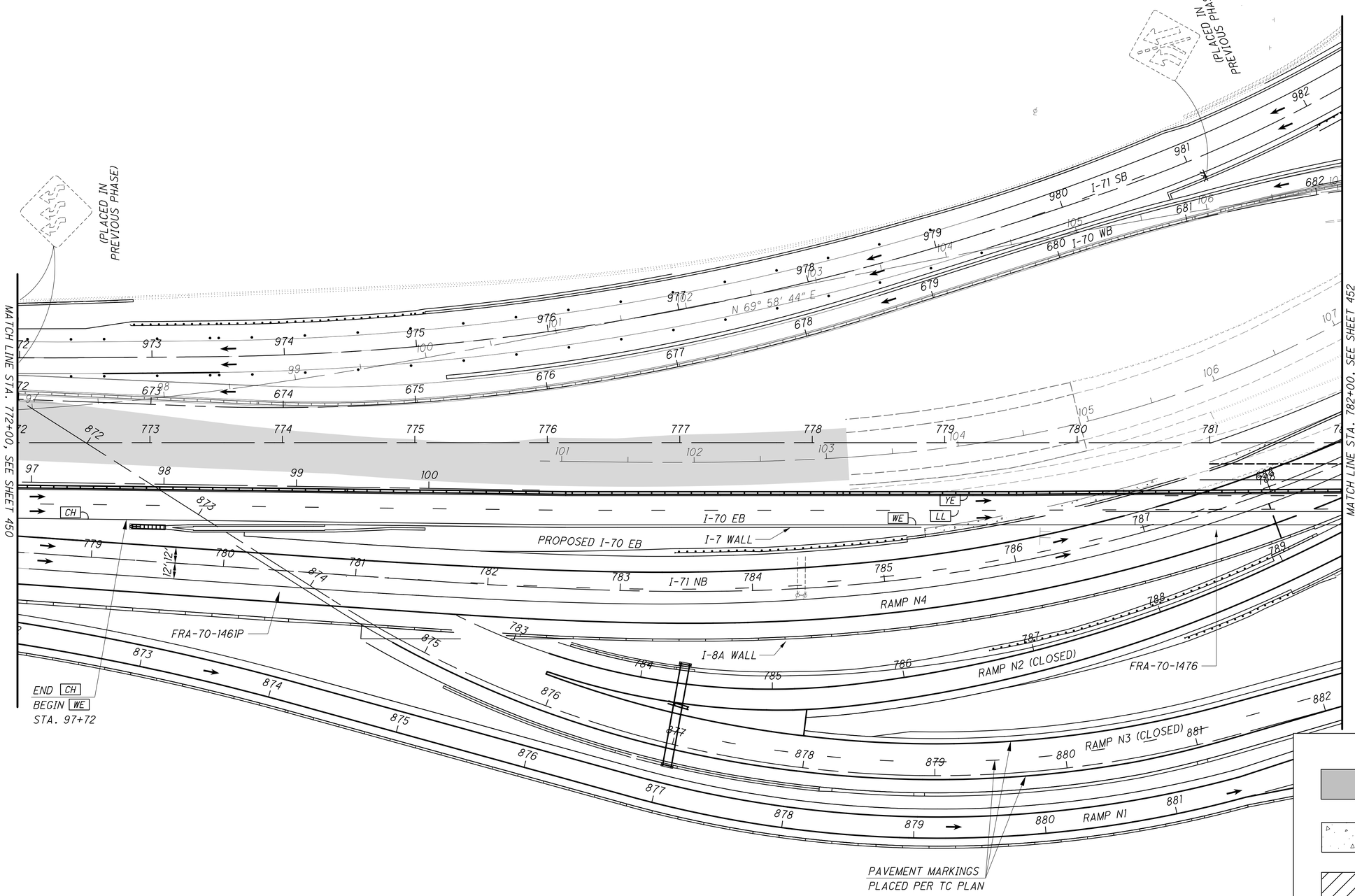

SHEET LEGEND

TEMPORARY PAVEMENT PLACED PRIOR TO THIS PHASE

TEMPORARY PAVEMENT PLACED DURING THIS PHASE

WORK AREA

FOR COMPLETE LEGEND AND DRUM SPACING CHART, SEE SHEET 156

HORIZONTAL SCALE IN FEET 0 20 40 80

CALCULATED JAH
CHECKED JML

MAINTENANCE OF TRAFFIC - PHASE 4A-STEP 3
I-70 EB & RAMP CONSTRUCTION

FRA-70-14.54

ms consultants, inc.

PLOT.CEL
ms consultants, inc.
msconsultants.com
Ohio DOT Workspace
70\71 East Interchange 2E
www.msconsultants.com
Batchplot Spec: \\msconsultants.com\files\production\03\60\06634_2E\standards\plotdrv\batchplt.spc
Pen Table: \\msconsultants.com\files\Standards\ustn\ohdot\V8i\ms\plotting\pen\V8i_ms_std.tbl
Plot Driver: \\msconsultants.com\files\Standards\ustn\ohdot\v8i\ms\plotting\PDF.pltcfg
34" x 22"
Model: Sheet
Printed: 9/28/2018 @ 10:28:00 AM
File: N:\03\60\06634_2E\mot\sheets\105322MP4063.dgn
View: FENCE_VIEW1
By: kryan

PLOT.CEL

ms consultants, inc.
msconsultants.com

www.msconsultants.com

Ohio DOT Workspace
70\71 East Interchange 2E

0 1" 0.5"

Batchplot Spec: \\msconsultants.com\Files\Standards\ustn\ohdot\V8i\ms\plotting\pen\V8i_ms_std.pltcfg ODOT: ohdotV8i
Pen Table: \\msconsultants.com\Files\Standards\ustn\ohdot\V8i\ms\plotting\pen\V8i_ms_std.pltcfg MCF: 60-06634_2E_Columbus
Plot Driver: \\msconsultants.com\Files\Standards\ustn\ohdot\v8i\ms\plotting\PDF.pltcfg

Model: Sheet
Printed: 9/28/2018 @ 10:28:09 AM View: FENCE_VIEW1
File: N:\03\60\06634_2E\mot\sheets\105220MP4064.dgn By: kryan

34" x 22"

NOTE

1. ALL PAVEMENT MARKINGS ARE EXISTING TO REMAIN OR PLACED IN A PREVIOUS STEP UNLESS OTHERWISE NOTED.

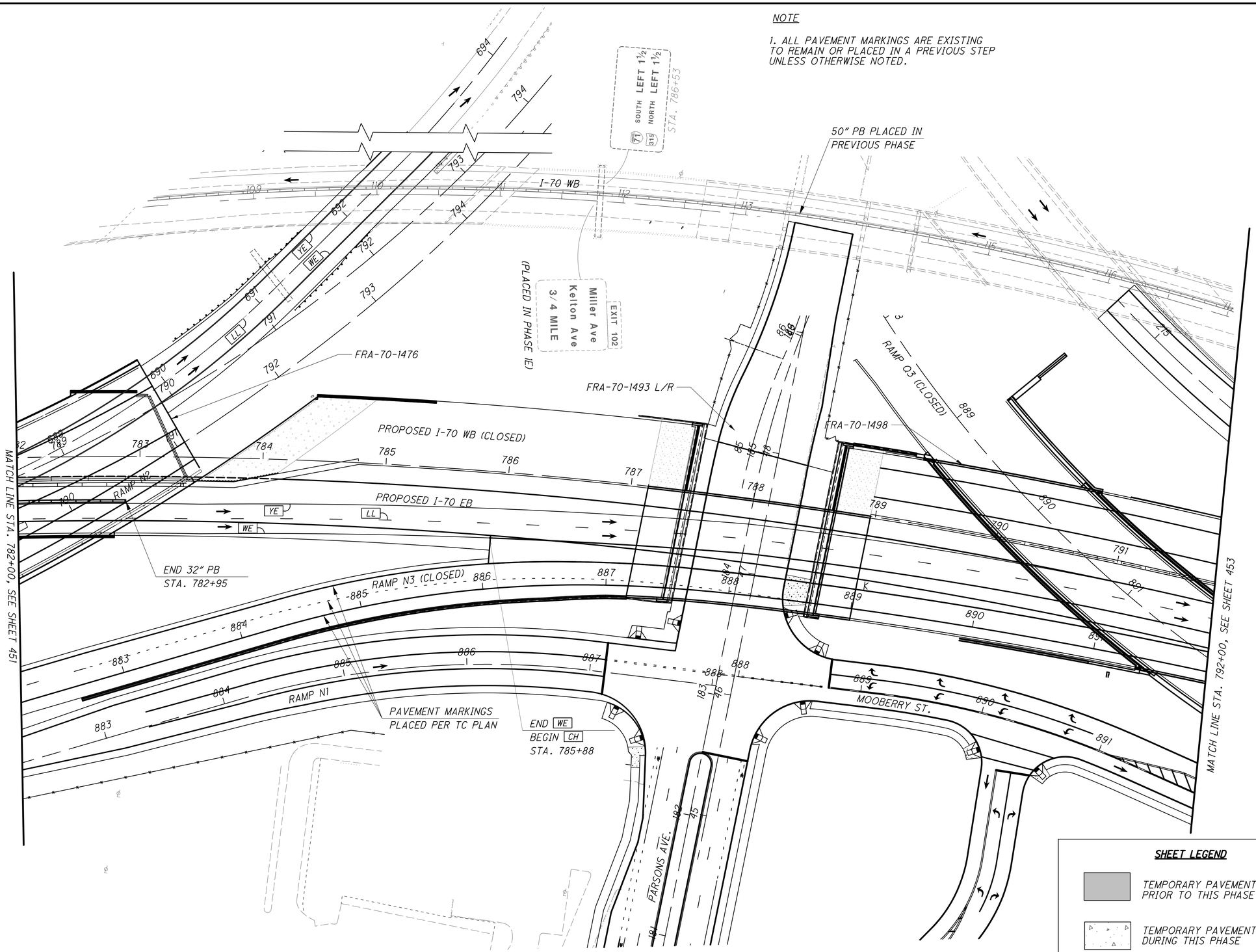

SHEET LEGEND

- TEMPORARY PAVEMENT PLACED PRIOR TO THIS PHASE
- TEMPORARY PAVEMENT PLACED DURING THIS PHASE
- WORK AREA

FOR COMPLETE LEGEND AND DRUM SPACING CHART, SEE SHEET 156

HORIZONTAL SCALE IN FEET
0 20 40 80

CALCULATED JAH
CHECKED JML

MAINTENANCE OF TRAFFIC - PHASE 4A-STEP 3
I-70 EB & RAMP CONSTRUCTION

FRA-70-14.54

452
2317

ms consultants, inc.

PLOT.CEL

ms consultants, inc.
msconsultants.com

www.msconsultants.com

Ohio DOT Workspace
70\71 East Interchange 2E

PDF: ohdot\V8i
DGN: 60-06634_2E_Columbus

Batchplot Spec: \\msconsultants.com\Files\production\03\60\06634_2E\standards\plotdrv\batchplt.spc
Pen Table: \\msconsultants.com\Files\Standards\usth\ohdot\V8i\ms\plotting\pen\V8i_ms_std.tbl
Plot Driver: \\msconsultants.com\Files\Standards\usth\ohdot\V8i\ms\plotting\PDF.pltcfg

Model: Sheet
Printed: 9/28/2018 @ 10:28:15 AM
File: N:\03\60\06634_2E\mot\sheets\105322MP4065.dgn
View: FENCE_VIEW1
By: kryan

34" x 22"

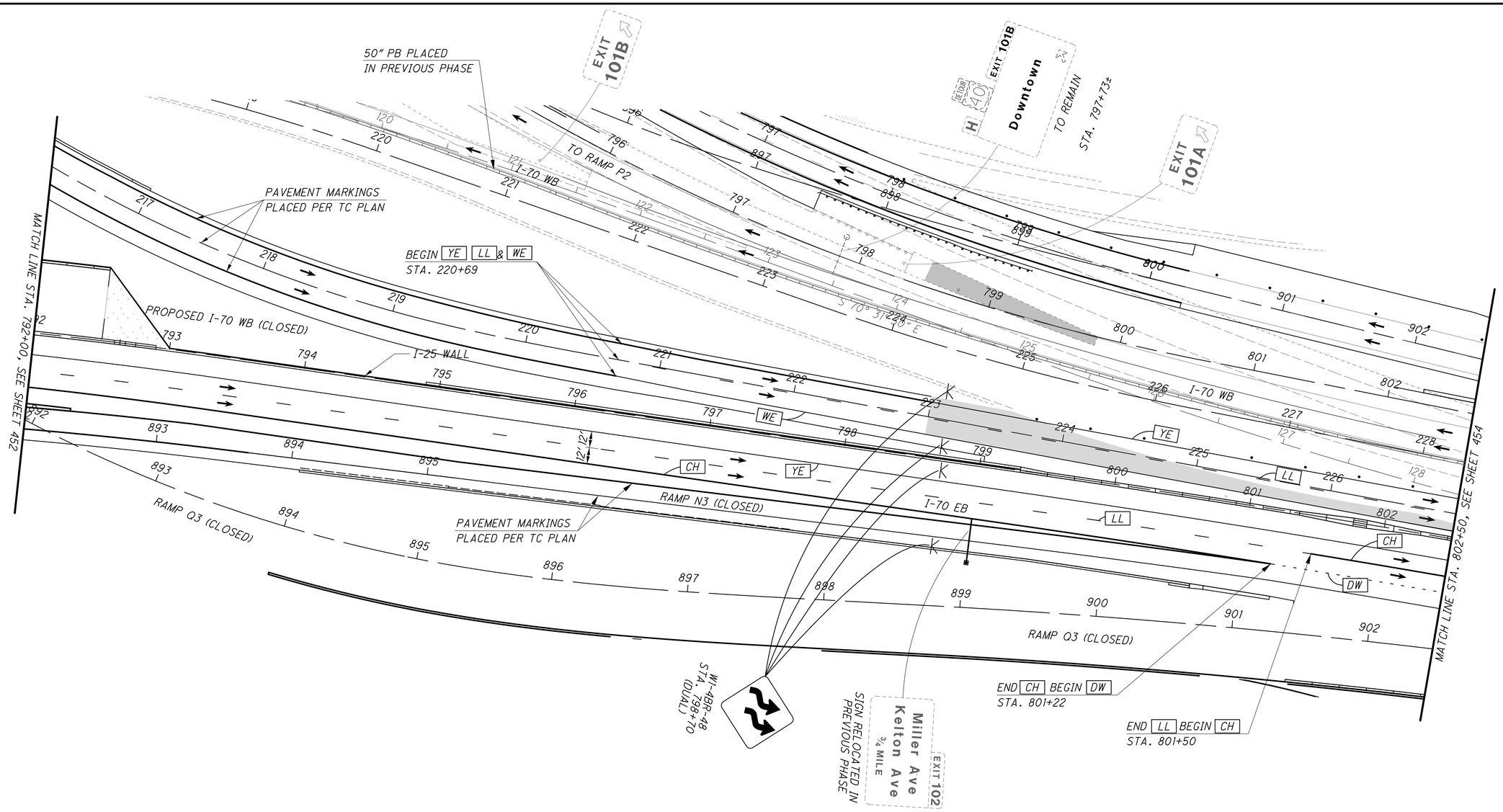

NOTE

1. ALL PAVEMENT MARKINGS ARE EXISTING TO REMAIN OR PLACED IN A PREVIOUS STEP UNLESS OTHERWISE NOTED.

SHEET LEGEND

- TEMPORARY PAVEMENT PLACED PRIOR TO THIS PHASE
- TEMPORARY PAVEMENT PLACED DURING THIS PHASE
- WORK AREA

FOR COMPLETE LEGEND AND DRUM SPACING CHART, SEE SHEET 156

HORIZONTAL SCALE IN FEET
0 20 40 80

CALCULATED JAH
CHECKED JML

MAINTENANCE OF TRAFFIC - PHASE 4A-STEP 3
I-70 EB & RAMP CONSTRUCTION

FRA-70-14.54

453
2317

ms consultants, inc.

PLOT.CEL

ms consultants, inc.
msconsultants.com

www.msconsultants.com

Ohio DOT Workspace
70\71 East Interchange 2E

Batchplot Spec: \\msconsultants.com\files\production\03\60\06634.2E\standards\plotdrv\batchplt.spc
Pen Table: \\msconsultants.com\files\Standards\ustn\ohdot\V8i\ms\plotting\pen\V8i_ms_std.tbl
Plot Driver: \\msconsultants.com\files\Standards\ustn\ohdot\v8i\ms\plotting\PDF.pltcfg

PDF: ohdotV8i
PCF: 60-06634_2E_Columbus

Model: Sheet View: FENCE_VIEW1
Printed: 9/28/2018 @ 10:28:27 AM By: kryan
File: N:\03\60\06634_2E\mat\sheets\105229MP4066.dgn

34" x 22"

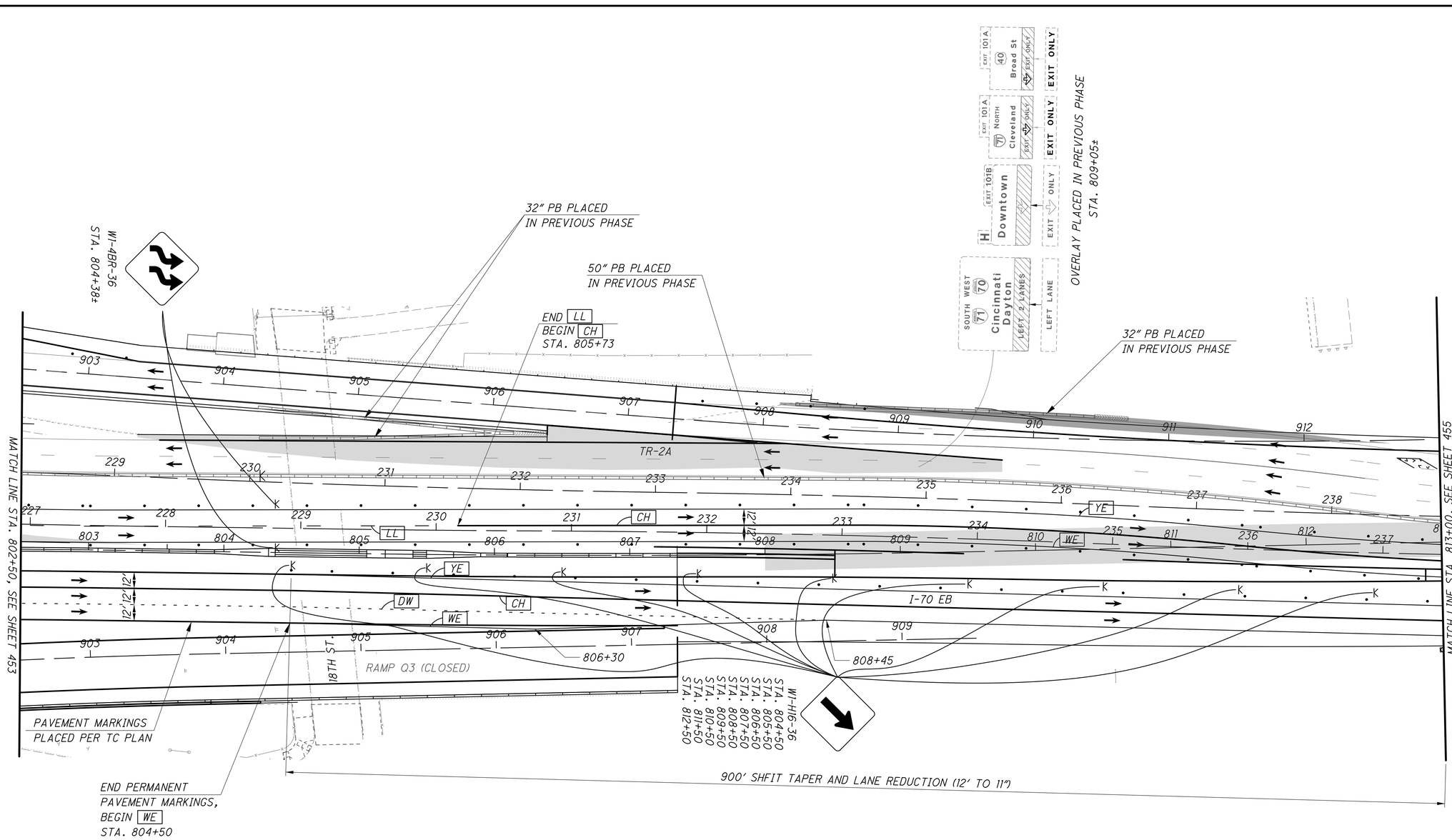

NOTE

1. ALL PAVEMENT MARKINGS ARE EXISTING TO REMAIN OR PLACED IN A PREVIOUS STEP UNLESS OTHERWISE NOTED.

2. ALL DOWNWARD ARROWS ON OVERHEAD SIGNS SHALL BE PLACED OVER THE CENTER OF TRAVEL LANE.

SHEET LEGEND

- TEMPORARY PAVEMENT PLACED PRIOR TO THIS PHASE
- TEMPORARY PAVEMENT PLACED DURING THIS PHASE
- WORK AREA

FOR COMPLETE LEGEND AND DRUM SPACING CHART, SEE SHEET 156

HORIZONTAL SCALE IN FEET
0 20 40 80

CALCULATED JAH
CHECKED JML

MAINTENANCE OF TRAFFIC - PHASE 4A-STEP 3
1-70 EB & RAMP CONSTRUCTION

FRA-70-14.54

454
2317

ms consultants, inc.

PLOT.CEL

ms consultants, inc.
msconsultants.com

Ohio DOT Workspace
70\71 East Interchange 2E

www.msconsultants.com

Batchplot Spec: \\msconsultants.com\files\production\Q3\60\06634_2E\standards\plotdr\batchplt.spc
Pen Table: \\msconsultants.com\files\Standards\usth\ohdot\V8i\ms\plotting\pen\V8i_ms_std.tbl
Plot Driver: \\msconsultants.com\files\Standards\usth\ohdot\V8i\ms\plotting\PDF.pltcfg
PDF: ohdotV8i
PCF: 60-06634_2E_Columbus

Model: Sheet
Printed: 9/28/2018 @ 10:28:32 AM
File: N:\Q3\60\06634_2E\mot\sheets\105220P4067.dgn
View: FENCE_VIEW1
By: kryan

34" x 22"

NOTE

1. ALL PAVEMENT MARKINGS ARE EXISTING TO REMAIN OR PLACED IN A PREVIOUS STEP UNLESS OTHERWISE NOTED.

2. ALL DOWNWARD ARROWS ON OVERHEAD SIGNS SHALL BE PLACED OVER THE CENTER OF TRAVEL LANE.

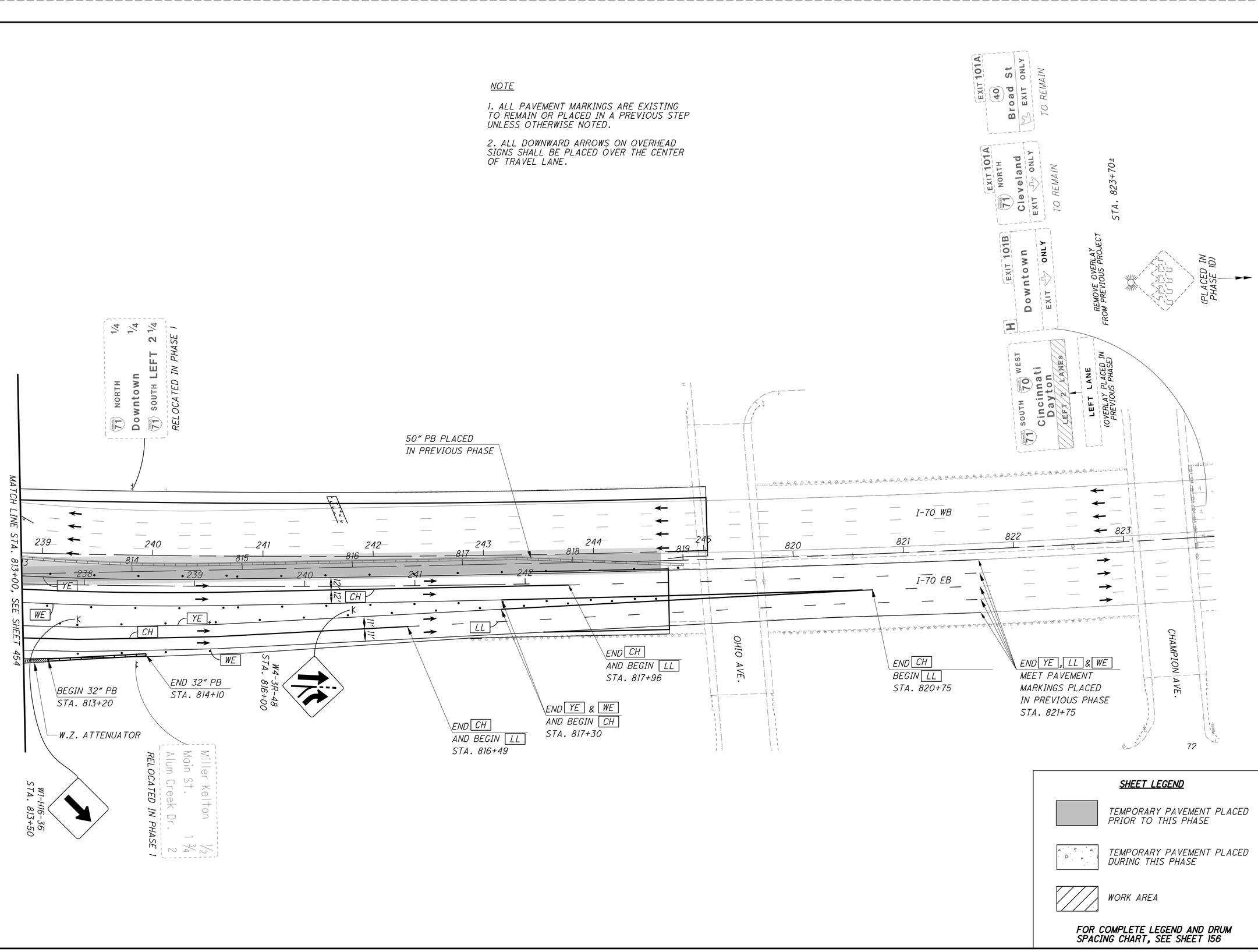

SHEET LEGEND

- TEMPORARY PAVEMENT PLACED PRIOR TO THIS PHASE
- TEMPORARY PAVEMENT PLACED DURING THIS PHASE
- WORK AREA

FOR COMPLETE LEGEND AND DRUM SPACING CHART, SEE SHEET 156

HORIZONTAL SCALE IN FEET
0 20 40 80

CALCULATED JAH
CHECKED JML

MAINTENANCE OF TRAFFIC - PHASE 4A-STEP 3
1-70 EB & RAMP CONSTRUCTION

FRA-70-14.54

455
2317

34" x 22"
Model: Sheet View: FENCE_VIEW1
Printed: 9/28/2018 @ 10:28:35 AM By: kryan
File: N:\03\60\06634_2E\mot\sheets\105322MP4030.dgn
Batchplot Spec: \\msconsultants.com\files\production\03\60\06634_2E\standards\plotdrv\batchplt.spc
Pen Table: \\msconsultants.com\files\Standards\ustn\ohdot\V8i\ms\plotting\pen\V8i_ms_std.tbl
Plot Driver: \\msconsultants.com\files\Standards\ustn\ohdot\v8i\ms\plotting\PDF.pltcfg
PCF: ohdotV8i
PCF: 60-06634_2E_Columbus
Ohio DOT Workspace
70\71 East Interchange 2E
ms consultants, inc.
msconsultants.com
PLOT.CEL
www.msconsultants.com

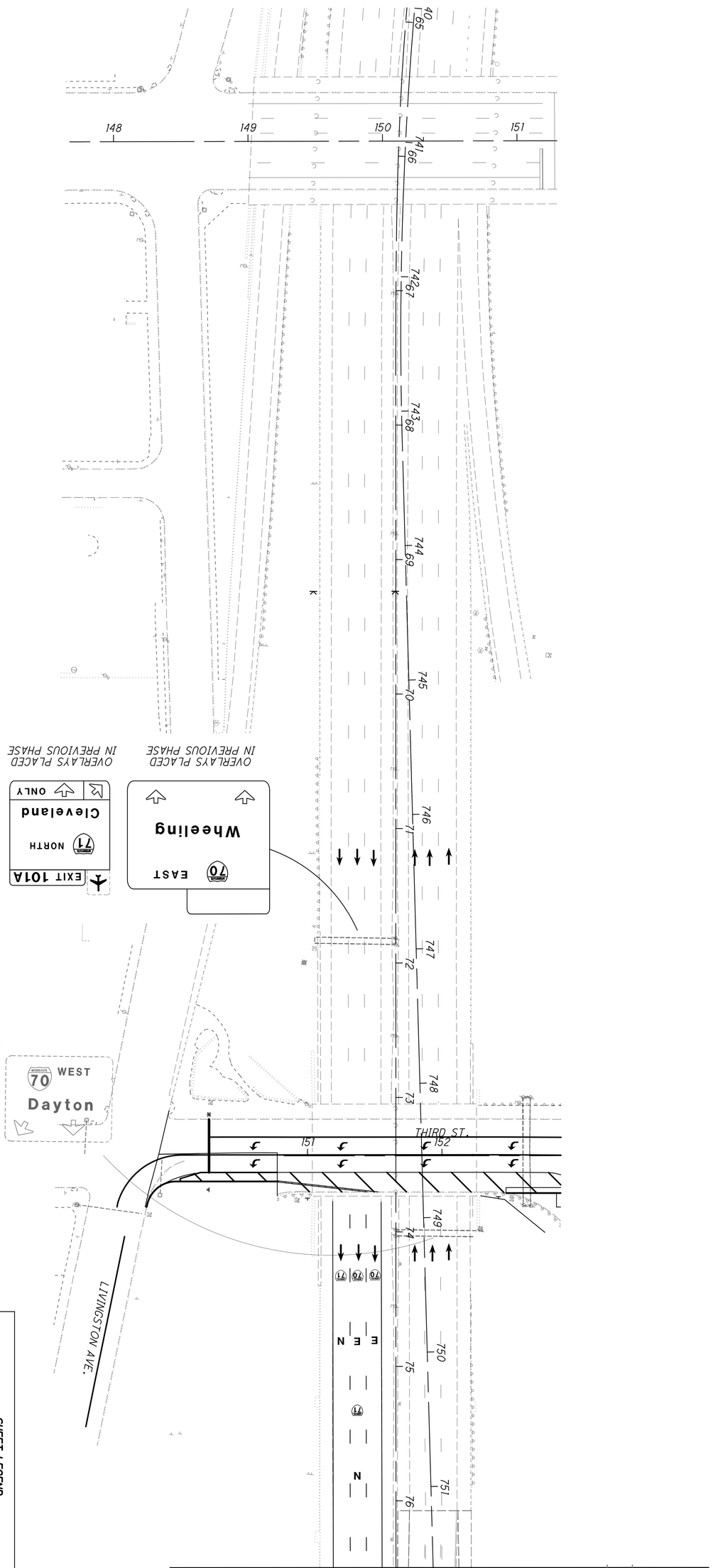

SHEET LEGEND

- TEMPORARY PAVEMENT PLACED PRIOR TO THIS PHASE
- TEMPORARY PAVEMENT PLACED DURING THIS PHASE
- WORK AREA

FOR COMPLETE LEGEND AND DRUM SPACING CHART, SEE SHEET 156

NOTE

1. ALL PAVEMENT MARKINGS ARE EXISTING TO REMAIN OR PLACED IN A PREVIOUS STEP UNLESS OTHERWISE NOTED.
2. ALL DOWNWARD ARROWS ON OVERHEAD SIGNS SHALL BE PLACED OVER THE CENTER OF TRAVEL LANE.
3. THE MAINTENANCE OF TRAFFIC CONFIGURATION ON FULTON STREET SHALL REMAIN AS SHOWN ON THE PHASE IE PLAN SHEET, SEE SHEETS 236 - 237, 245.

457
2317

FRA-70-14.54

MAINTENANCE OF TRAFFIC - PHASE 4B-STEP 1
TRANS. I-70 WB & RAMP N3

CALCULATED JAH
CHECKED JML

0 20 40 80
HORIZONTAL SCALE IN FEET

N

ms consultants, inc.

PLOT.CEL

ms consultants, inc.
msconsultants.com

www.msconsultants.com

Ohio DOT Workspace
70\71 East Interchange 2E

0 1" 0.5"

Batchplot Spec: \\msconsultants.com\Files\Production\03\60\06634_2E\standards\plotdrv\batchplt.spc
Pen Table: \\msconsultants.com\Files\Standards\ustn\ohdot\V8i\ms\plotting\pen\V8i_ms_std.tbl PCF: ohdotV8i
Plot Driver: \\msconsultants.com\Files\Standards\ustn\ohdot\v8i\ms\plotting\PDF.pltcfg PCF: 60-06634_2E_Columbus

Model: Sheet View: FENCE_VIEW1
Printed: 9/28/2018 @ 10:28:42 AM By: kryan
File: N:\03\60\06634_2E\mat\sheets\105322#P403.dgn

34" x 22"

NOTE

1. ALL PAVEMENT MARKINGS ARE EXISTING TO REMAIN OR PLACED IN A PREVIOUS STEP UNLESS OTHERWISE NOTED.

2. ALL DOWNWARD ARROWS ON OVERHEAD SIGNS SHALL BE PLACED OVER THE CENTER OF TRAVEL LANE.

3. THE MAINTENANCE OF TRAFFIC CONFIGURATION ON FULTON STREET SHALL REMAIN AS SHOWN ON THE PHASE 1E PLAN SHEETS, SEE SHEETS 236 - 237, 245.

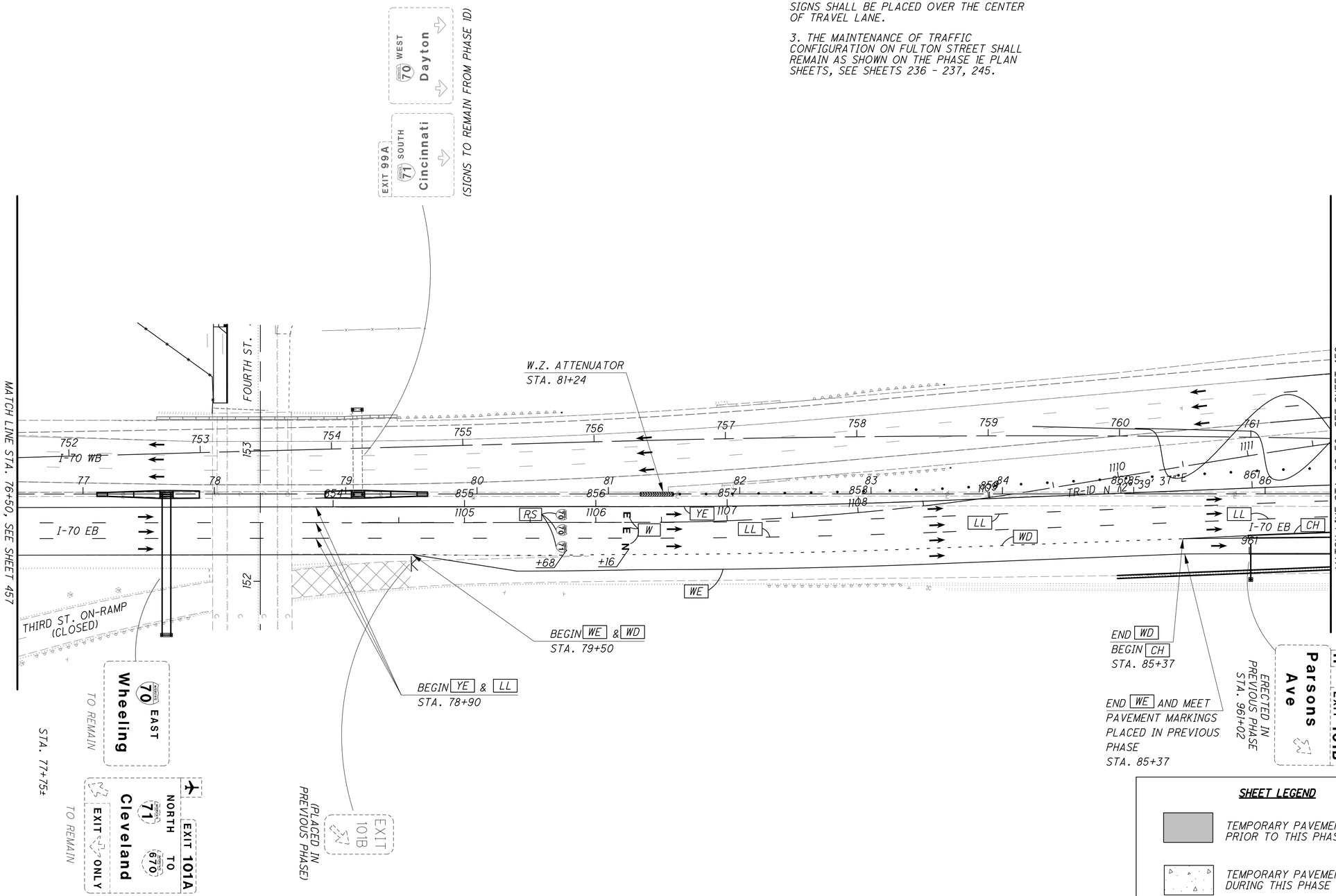

SHEET LEGEND

- TEMPORARY PAVEMENT PLACED PRIOR TO THIS PHASE
- TEMPORARY PAVEMENT PLACED DURING THIS PHASE
- WORK AREA

FOR COMPLETE LEGEND AND DRUM SPACING CHART, SEE SHEET 156

N

HORIZONTAL SCALE IN FEET
0 20 40 80

CALCULATED JAH
CHECKED JML

MAINTENANCE OF TRAFFIC - PHASE 4B-STEP 1
TRANS.I-70 WB & RAMP N3

FRA-70-14.54

458
2317

PLOT.CEL
ms consultants, inc.
msconsultants.com
www.msconsultants.com
Ohio DOT Workspace
70\71 East Interchange 2E
PDF: ohdotV8i
PCF: 60-06634_2E_Columbus
Batchplot Spec: \\msconsultants.com\files\production\03\60\06634_2E\standards\plotdrv\batchplt.spc
Pen Table: N:\03\60\06634_2E\standards\tables\V8i_ms_std_NoClouds.tbl
Plot Driver: \\msconsultants.com\files\Standards\usfn\ohdot\V8\ms\plotting\PDF.pltcfg
Model: Sheet View: FENCE_VIEW1
Printed: 2/12/2019 @ 9:59:49 AM By: awhite
File: N:\03\60\06634_2E\mot\sheets\103220MP4032.dgn
34" x 22"

NOTE

1. ALL PAVEMENT MARKINGS ARE EXISTING TO REMAIN OR PLACED IN A PREVIOUS STEP UNLESS OTHERWISE NOTED.

2. ALL DOWNWARD ARROWS ON OVERHEAD SIGNS SHALL BE PLACED OVER THE CENTER OF TRAVEL LANE.

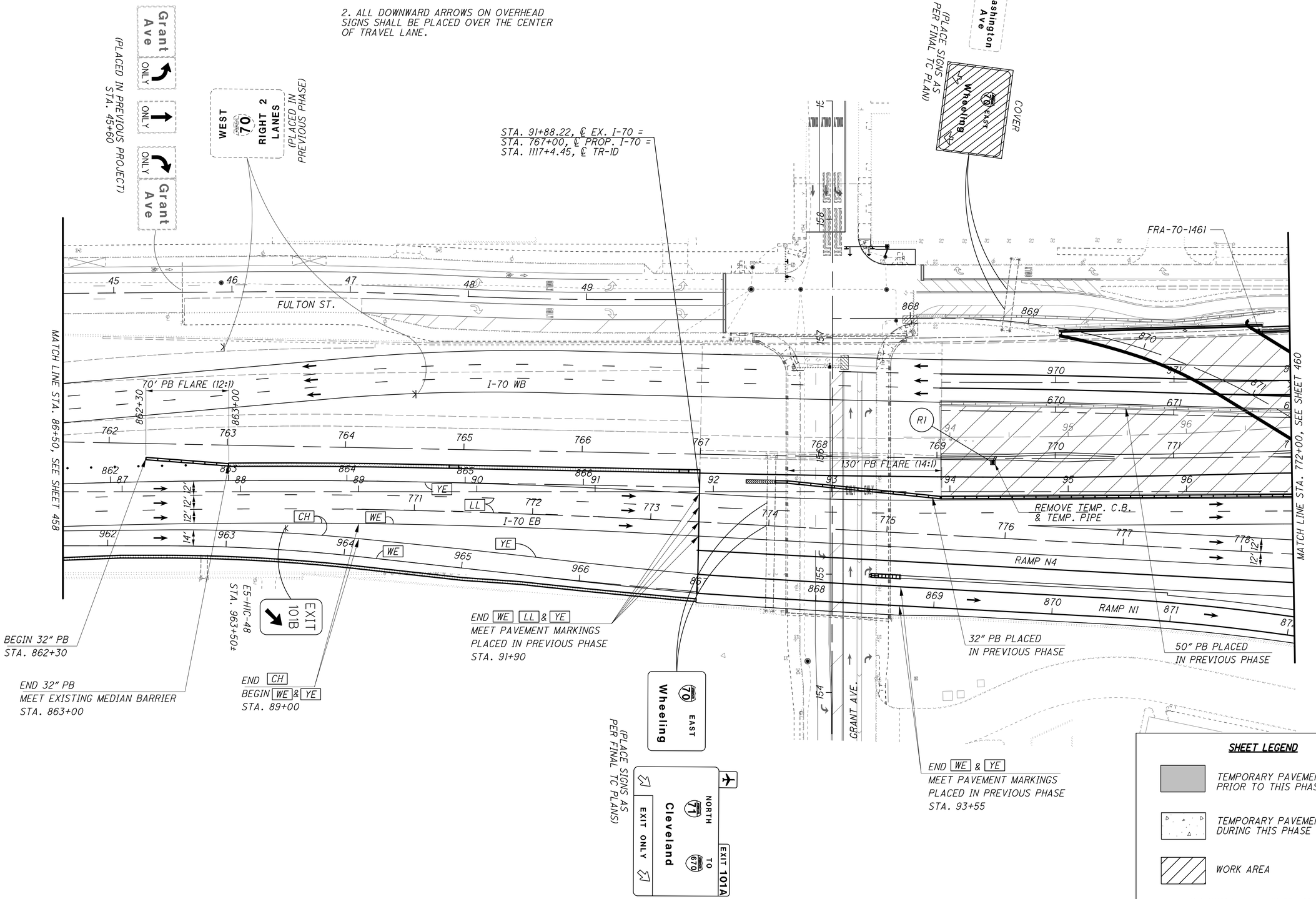

SHEET LEGEND

- TEMPORARY PAVEMENT PLACED PRIOR TO THIS PHASE
- TEMPORARY PAVEMENT PLACED DURING THIS PHASE
- WORK AREA

FOR COMPLETE LEGEND AND DRUM SPACING CHART, SEE SHEET 156

HORIZONTAL SCALE IN FEET
0 20 40 80

CALCULATED JAH
CHECKED JML

MAINTENANCE OF TRAFFIC - PHASE 4B-STEP 1
TRANS.I-70 WB & RAMP N3

FRA-70-14.54

459
2317

ms consultants, inc.

PLOT.CEL

ms consultants, inc.
msconsultants.com

Ohio DOT Workspace
70\71 East Interchange 2E

www.msconsultants.com

1"
0
0.5"

Batchplot Spec: \\msconsultants.com\Files\Production\03\60\06634.2E\standards\plotdrv\batchplt.spc
Pen Table: \\msconsultants.com\Files\Standards\ustn\ohdot\V8i\ms\plotting\pen\V8i_ms_std.tbl
Plot Driver: \\msconsultants.com\Files\Standards\ustn\ohdot\v8i\ms\plotting\PDF.pltcfg

PDF: ohdot.V8i
PDF: 60-06634_2E_Columbus

34" x 22"

View: FENCE_VIEW1
By: kryan
Model: Sheet
Printed: 9/28/2018 @ 10:28:52 AM
File: N:\03\60\06634.2E\mot\sheets\05322MP4033.dgn

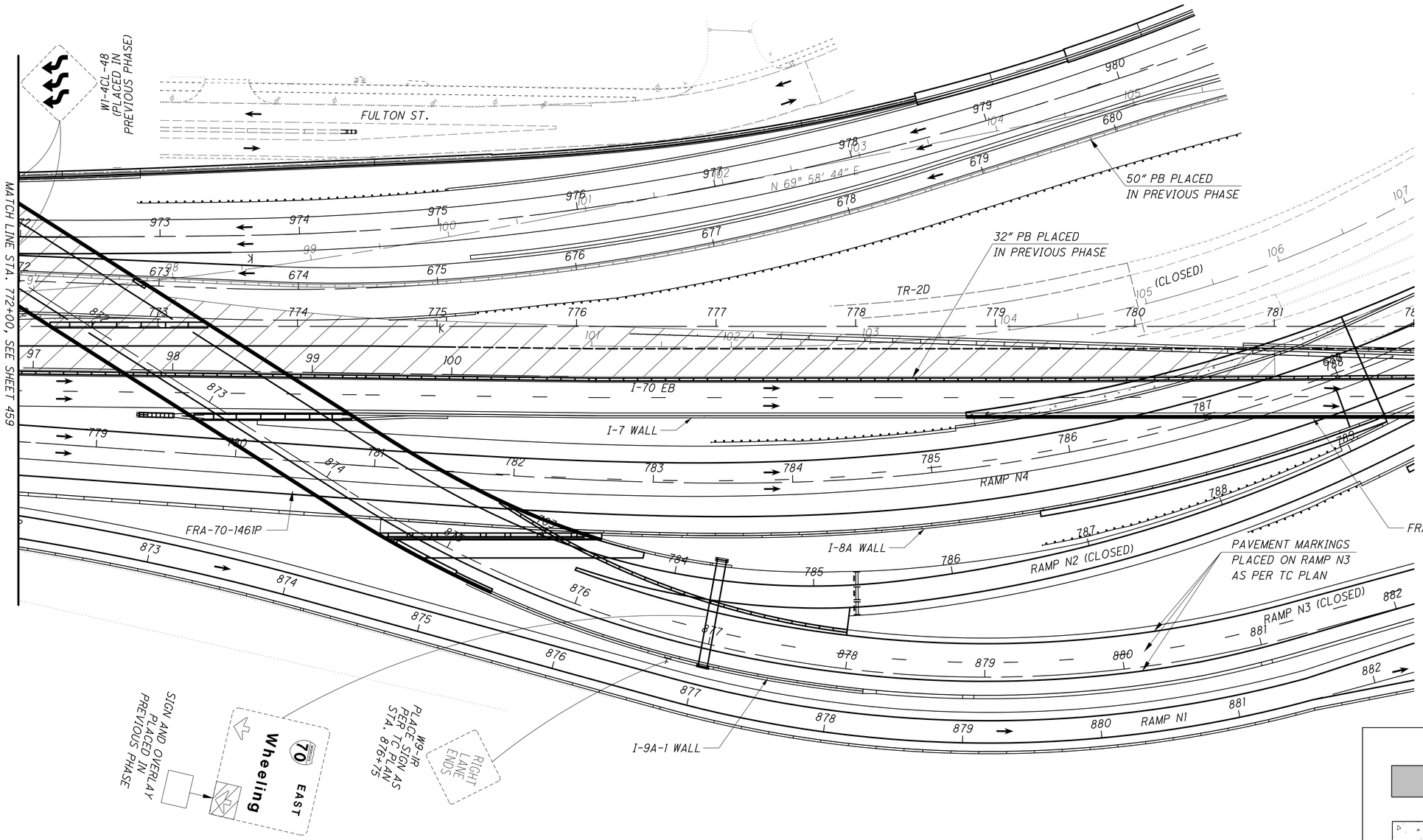

NOTE

1. ALL PAVEMENT MARKINGS ARE EXISTING TO REMAIN OR PLACED IN A PREVIOUS STEP UNLESS OTHERWISE NOTED.

TEMPORARY ROAD NAMES/DESCRIPTIONS

TR-1D: TEMP I-70 EB
TR-2D: TEMP I-70 EB TO I-71 NB

SHEET LEGEND

- TEMPORARY PAVEMENT PLACED PRIOR TO THIS PHASE
- TEMPORARY PAVEMENT PLACED DURING THIS PHASE
- WORK AREA

FOR COMPLETE LEGEND AND DRUM SPACING CHART, SEE SHEET

N

0 20 40 80
HORIZONTAL SCALE IN FEET

CALCULATED JAH
CHECKED JML

MAINTENANCE OF TRAFFIC - PHASE 4B-STEP 1
TRANS. I-70 WB & RAMP N3

FRA-70-14.54

460
2317

PLOT.CEL

ms consultants, inc.
msconsultants.com

www.msconsultants.com

Ohio DOT Workspace
70\71 East Interchange 2E

0 0.5" 1"

Batchplot Spec: \\msconsultants.com\files\production\03\60\06634_2E\standards\plotdrv\batchplt.spc PCF: ohdot1V8i
Pen Table: \\msconsultants.com\files\Standards\usitn\ohdot\V8i\ms\plotting\pen\V8i_ms_std.tbl PCF: 60-06634_2E_Columbus
Plot Driver: \\msconsultants.com\files\Standards\usitn\ohdot\V8i\ms\plotting\PDF.pltcfg

Model: Sheet
Printed: 9/28/2018 @ 10:28:54 AM By: kryan
File: \\msconsultants.com\files\Production\03\60\06634_2E\mod\sheets\105322M01009.dgn

34" x 22"

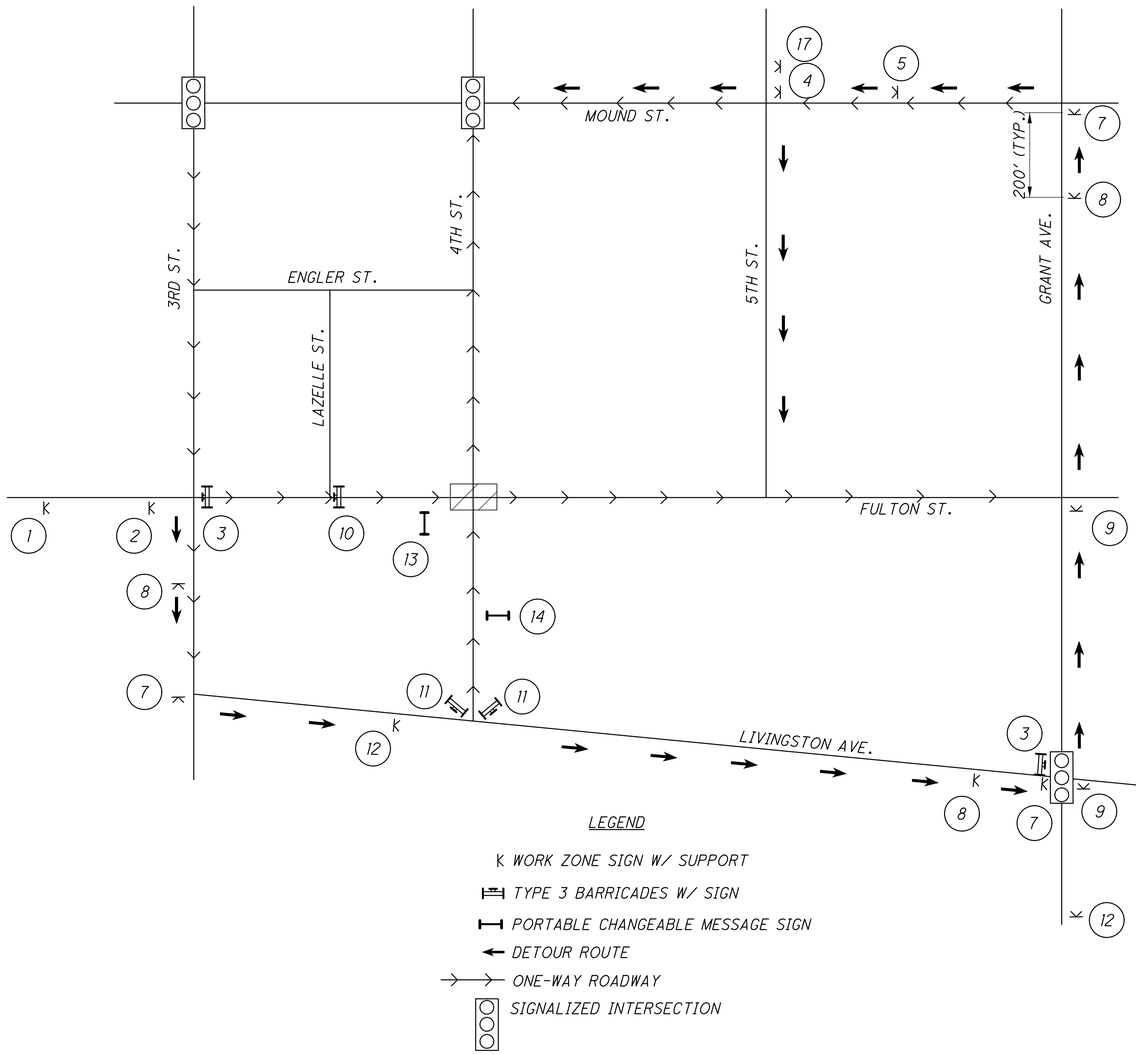

LEGEND

- K WORK ZONE SIGN W/ SUPPORT
- TYPE 3 BARRICADES W/ SIGN
- PORTABLE CHANGEABLE MESSAGE SIGN
- DETOUR ROUTE
- ONE-WAY ROADWAY
- SIGNALIZED INTERSECTION

NOTES:

1. PCMS AT LOCATIONS (13) AND (14) SHALL BE PLACED FIVE (5) DAYS PRIOR TO THE CLOSURE.

2. THIS DETOUR SHALL BE IN EFFECT DURING THE CLOSURE OF THE FULTON STREET AND FOURTH STREET INTERSECTION.

3. THE MAXIMUM DURATION PERMITTED FOR THIS DETOUR IS FOURTEEN (14) CALENDAR DAYS.

4. FOR ADDITIONAL DETOUR SIGN DETAILS, SEE SHEETS 460G-460H.

TYPE A
ROAD CLOSED AHEAD
W20-3-36
(1)

TYPE A
DETOUR AHEAD
W20-2-36
(2)

W14-2-36
NO OUTLET
TYPE A TYPE A
ROAD CLOSED
NO ACCESS TO FOURTH STREET
LOCAL TRAFFIC ONLY
R11-3-66
DETOUR
54"X12" OVERLAY (BLACK/ORANGE)
M4-10R-48
ON TYPE 3 BARRICADE
(3)

D3-1 48" X 12" (BLACK/ORANGE)

FULTON ST
DETOUR
M4-9L-30
(4)

FULTON ST
DETOUR
M4-H9BL-30
(5)

D3-1 48" X 24" (BLACK/ORANGE)

FULTON ST FOURTH ST
DETOUR
M4-9L-30
(7)

FULTON ST FOURTH ST
DETOUR
M4-H9BL-30
(8)

FULTON ST FOURTH ST
DETOUR
M4-H9T-30
(9)

SPECIAL 48" X 48" (BLACK/ORANGE)

FOURTH ST
CLOSED
NORTH OF
LIVINGSTON
DETOUR
M4-9R-30
(12)

SAFETY FLAGS (TYP.)
TYPE "A" ROAD CLOSED R11-2-48 DO NOT ENTER R5-1-36 ROAD CLOSED R11-2-48
10' TYPE 3 SOLID BARRICADES
(PLACED ACROSS ENTIRE ROADWAY)
(10)

SAFETY FLAGS (TYP.)
TYPE "A" ROAD CLOSED R11-2-48 DETOUR M4-10R-48 DO NOT ENTER R5-1-36 ROAD CLOSED R11-2-48 DETOUR M4-10R-48
10' TYPE 3 SOLID BARRICADES
(PLACED ACROSS ENTIRE ROADWAY)
(11)

MESSAGES FOR PORTABLE CHANGEABLE MESSAGE SIGNS

(2 SEC) FULTON STREET CLOSES
(2 SEC) XX/XX/XX TO XX/XX/XX
(13)

(2 SEC) FOURTH STREET CLOSES
(2 SEC) XX/XX/XX TO XX/XX/XX
(14)

D3-1 48" X 12" (BLACK/ORANGE)

FOURTH ST
DETOUR
M4-9R-30
(15)

FOURTH ST
DETOUR
M4-H9BR-30
(16)

FOURTH ST
DETOUR
M4-H9T-30
(17)

CALCULATED JAH
CHECKED JML

FOURTH ST. CLOSURE AT FULTON ST.

PHASE 4B - STEP 2 - FOU

FRA-70-14.54

460A
2317

ms consultants, inc.

PLOT.CEL

ms consultants, inc.
msconsultants.com

Ohio DOT Workspace
70\71 East Interchange 2E
www.msconsultants.com

0 1" 0.5"

Batchplot Spec: \\msconsultants.com\files\production\03\60\06634.2E\standards\plotdr\batchplt.spc
Pen Table: \\msconsultants.com\files\Standards\usth\ohdot\V8i\ms\plotting\pen\V8i_ms_std.tbl PCF: ohdotV8i
Plot Driver: \\msconsultants.com\files\Standards\usth\ohdot\v8i\ms\plotting\PDF.pltcfg PCF: 60-06634_2E_Columbus

Model: Sheet View: FENCE_VIEW1
Printed: 9/28/2018 @ 10:28:57 AM By: kryan
File: \\msconsultants.com\files\Production\03\60\06634_2E\mod\sheets\105229MP1001.dgn

34" x 22"

ENGLER ST.

W4-2L-36
STA. 156+75±
(DUAL)

33 Livingston Ave ONLY

W20-5L-36
STA. 157+75±
(DUAL)
LEFT LANE CLOSED AHEAD

W20-1-36
STA. 159+00±
(DUAL)
ROAD WORK AHEAD

DRUMS

20' C/C (TYP.)

THIRD ST.

150' MERGE TAPER

155+50

FLASHING ARROW PANEL TYPE 'C' STA. 155+00±

154+00

LAZELLE ST.

23 SOUTH High St Fulton St

Third St WEST 70

STA. 33+67

70 EAST Wheeling ONLY

REMOVED IN A PREVIOUS PHASE

FOURTH ST.

04

11'

04

FULTON ST.
30 31 32 33 34 35 36 37 38

N 81° 53' 34" E

+50

WE

THIRD ST. TO I-70 WB ON-RAMP

R6-2R-24
STA. 33+93±
ONE WAY

W1-H16-36
STA. 36+00±

PAVEMENT MARKINGS PLACED AS PER TRAFFIC CONTROL PLAN

℄ FULTON ST.

11' 2' 3.5' VARIES WORK AREA

18'

DRUM

CONSTRUCTION JOINT

TYPICAL SECTION 04-04
NOT TO SCALE

NOTES:

1. ALL PAVEMENT MARKINGS ARE EXISTING TO REMAIN OR PLACED IN A PREVIOUS MAINTENANCE OF TRAFFIC PHASE UNLESS OTHERWISE NOTED.

SHEET LEGEND

- TEMPORARY PAVEMENT PLACED PRIOR TO THIS PHASE
- TEMPORARY PAVEMENT PLACED DURING THIS PHASE
- WORK AREA

FOR COMPLETE LEGEND AND DRUM SPACING CHART, SEE SHEET 156

N

0 15 30 60
HORIZONTAL SCALE IN FEET

CALCULATED JAH
CHECKED JML

MAINTENANCE OF TRAFFIC - PHASE 4B
FULTON ST. - STEP 1

FRA-70-14.54

460B
2317

PLOT.CEL
ms consultants, inc.
msconsultants.com
www.msconsultants.com
Ohio DOT Workspace
70\71 East Interchange 2E
Batchplot Spec: \\msconsultants.com\Files\Production\03\60\06634_2E\standards\plotdrv\batchplt.spc
Pen Table: \\msconsultants.com\Files\Standards\ustn\ohdot\V8i\ms\plotting\pen\V8i_ms_std.tbl
Plot Driver: \\msconsultants.com\Files\Standards\ustn\ohdot\V8i\ms\plotting\PDF.pltcfg
Model: Sheet
Printed: 9/28/2018 @ 10:29:01 AM
File: \\msconsultants.com\Files\Production\03\60\06634_2E\mot\sheets\105322MP1011.dgn
View: FENCE_VIEW1
By: kryan
34" x 22"

PLACED AS PER TC PLAN

Third St

36" X 24" OVERLAY (ORANGE)

OVERLAY 84" X 18" AS PER TC PLAN

Fulton St

Wheeling — EAST 70 — ONLY

Livingston Ave — 33 — ONLY

STA. 156+30

Third St — 23 — ONLY

Fulton St — SOUTH WEST 71 70 — ONLY

SOUTH WEST 71 70

OVERLAY 96" X 48" AS PER TC PLAN

W20-5-36 (DUAL) — LEFT LANE CLOSED AHEAD

W20-1-36 (DUAL) — ROAD WORK AHEAD

200'±

200'±

W4-2L-36 (DUAL) STA. 156+50±

FLASHING ARROW PANEL TYPE 'C' STA. 155+00±

℄ FULTON ST.

VARIES WORK AREA — 3.5' 2' 1' — 12' — 1' 2' 2'-6"

CONSTRUCTION JOINT — DRUM — DRUM

TYPICAL SECTION 11-11
NOT TO SCALE

0 30 60
HORIZONTAL SCALE IN FEET

CALCULATED JAH
CHECKED JML

PAVEMENT MARKINGS PLACED AS PER TRAFFIC CONTROL PLAN

FULTON ST.

25 26 27

MATCH LINE STA. 27+50 THIS SHEET

ENGLER ST.

155+60

THIRD ST.

PAVEMENT MARKINGS PLACED AS PER TRAFFIC CONTROL PLAN

150' MERGE TAPER

R3-H8DA-54 STA. 154+75±

R3-H8DA-54 STA. 154+00±

10' TYPE 3 SOLID BARRICADES (PLACED ACROSS ENTIRE ROADWAY) STA. 33+96±

R11-2-48 ROAD CLOSED — R5-1-36 NO ENTRY — R11-2-48 ROAD CLOSED

SAFETY FLAGS (TYP.)

154+10

W1-H16-36 STA. 31+85±

W1-H16-36 STA. 33+00± STA. 34+00±

SEE SHEET 138 FOR DETAILS ON MAINTAINING PEDESTRIAN TRAFFIC DURING SIDEWALK CLOSURES

BAG OR REMOVE EXISTING WB SIGNAL HEADS

DO NOT ENTER — R5-1-36 STA. 31+00±

PAVEMENT MARKINGS PLACED AS PER TRAFFIC CONTROL PLAN

LAZELLE ST.

FULTON ST. 12'

28 29 30 31 32 33 34

A +69 +00 +00

33+00 — 115' SHIFT TAPER — 34+15

MATCH LINE STA. 27+50 THIS SHEET

MATCH LINE STA. 35+00 SEE SHEET 460D

THIRD ST. TO I-70 WB ON-RAMP

R3-2-36 (MAST ARM MTD.)

(6" ORANGE BORDER) R3-H8BB-30 STA. 30+00±

(6" ORANGE BORDER) R3-H8BB-30 STA. 30+87±

PLACED AS PER TC PLAN

Third St

STA. 152+63

Wheeling — EAST 70 — ONLY

SOUTH WEST 71 70

REMOVE AND RE-ERECT PER TC PLAN

Livingston Ave — 33

OVERLAY 144" X 54" AS PER TC PLAN

PAVEMENT MARKINGS PLACED AS PER TRAFFIC CONTROL PLAN

TYPICAL SIGNS

ONE WAY — R6-2R-24 (1R) — ONE WAY — R6-2L-24 (1L)

SHEET LEGEND

TEMPORARY PAVEMENT PLACED PRIOR TO THIS PHASE

TEMPORARY PAVEMENT PLACED DURING THIS PHASE

WORK AREA

FOR COMPLETE LEGEND AND DRUM SPACING CHART, SEE SHEET 156

NOTE:

1. ALL PAVEMENT MARKINGS ARE EXISTING TO REMAIN OR PLACED IN A PREVIOUS STEP UNLESS OTHERWISE NOTED.

MAINTENANCE OF TRAFFIC - PHASE 4B
FULTON ST. - STEP 2

FRA-70-14.54

4600
2317

PLOT.CEL

ms consultants, inc.
msconsultants.com

www.msconsultants.com

Ohio DOT Workspace
70\71 East Interchange 2E

1"
0.5"
0

Batchplot Spec: \\msconsultants.com\files\Production\03\60\06634_2E\standards\plotdrv\batchplt.spc
Pen Table: \\msconsultants.com\files\Standards\ustn\ohdot\V8i\ms\plotting\pen\V8i_ms_std.tbl
Plot Driver: \\msconsultants.com\files\Standards\ustn\ohdot\v8i\ms\plotting\PDF: ohdotV8i
PCF: 60-06634_2E_Columbus

Model: Sheet @ 10:29:05 AM View: FENCE_VIEW1
Printed: 9/28/2018 By: kryan
File: \\msconsultants.com\files\Production\03\60\06634_2E\mot\sheets\105322MP1012.dgn

34" x 22"

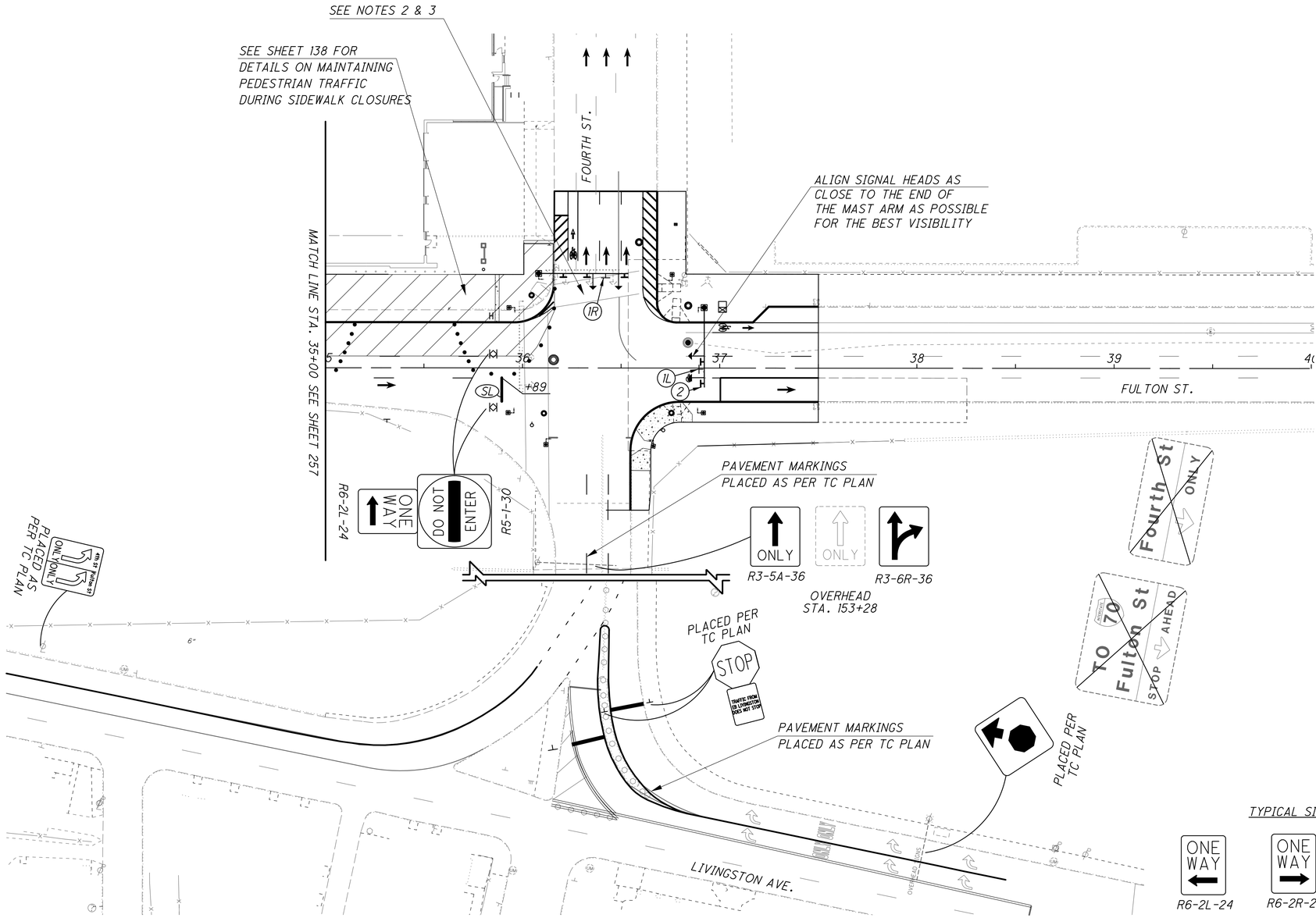

NOTES

1. ALL PAVEMENT MARKINGS ARE EXISTING TO REMAIN OR PLACED IN A PREVIOUS STEP UNLESS OTHERWISE NOTED.

2. FOURTH STREET IS PERMITTED TO BE CLOSED TO COMPLETE CONSTRUCTION WITHIN THE ROADWAY. CLOSURE SHALL BE FOR A MAXIMUM OF 14 CALENDAR DAYS.
SEE SHEET 460A FOR DETOUR AND SHEETS 460E - 460H FOR ADDITIONAL CLOSURE DETAILS.

3. THE CONTRACTOR IS PERMITTED TO CLOSE THE CURB LANES TO COMPLETE WORK OUTSIDE OF THE ROADWAY. LANE CLOSURES SHALL ONLY BE PERMITTED 9 AM TO 3 PM ON WEEKDAYS AND ANYTIME OF WEEKENDS.

TYPICAL SIGNS

SHEET LEGEND

TEMPORARY PAVEMENT PLACED PRIOR TO THIS PHASE

TEMPORARY PAVEMENT PLACED DURING THIS PHASE

WORK AREA

FOR COMPLETE LEGEND AND DRUM SPACING CHART, SEE SHEET 156

HORIZONTAL SCALE IN FEET
0 15 30 60

CALCULATED JAH
CHECKED JML

MAINTENANCE OF TRAFFIC - PHASE 4B
FULTON ST. - STEP 2

FRA-70-14.54

460D
2317

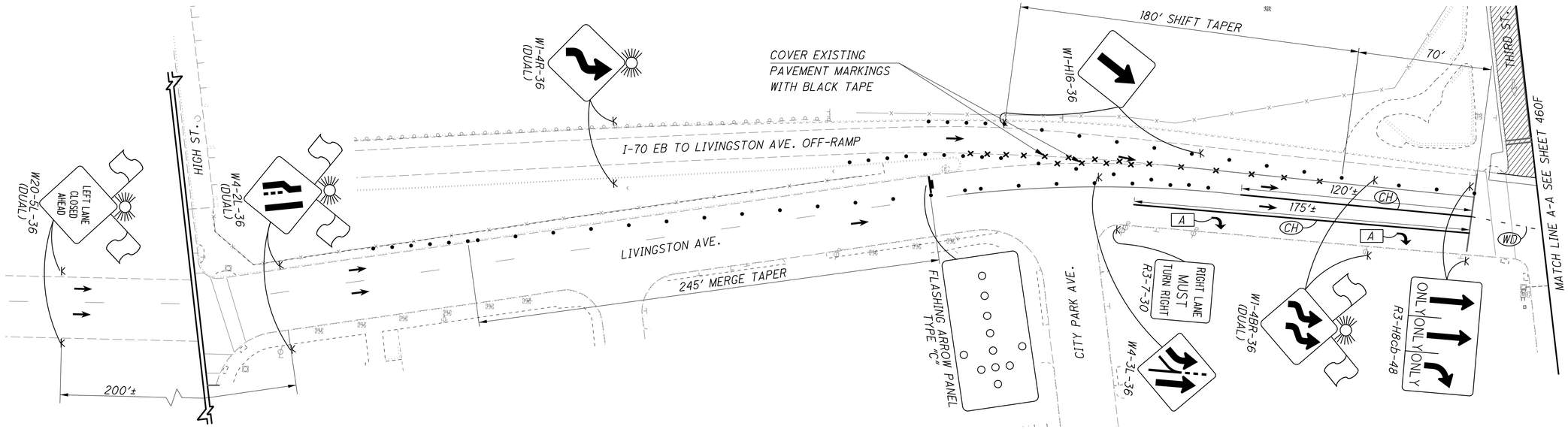

NOTES

1. THE MAINTENANCE OF TRAFFIC SETUP ON LIVINGSTON AVENUE SHALL BE IN EFFECT DURING THE FOURTH STREET AND FULTON STREET INTERSECTION CLOSURE.

2. SEE SHEET 460A FOR THE DETOUR PLAN DURING THE FOURTH STREET AND FULTON STREET INTERSECTION CLOSURE.

3. REMOVE OR COVER ALL EXISTING PARKING SIGNS ON LIVINGSTON AVE. BETWEEN THIRD STREET AND GRANT AVENUE AND REPLACE WITH TEMPORARY "NO STOPPING ANY TIME" SIGNS (R7-4-12).

4. ALL PAVEMENT MARKINGS ARE EXISTING TO REMAIN OR PLACED IN A PREVIOUS STEP UNLESS OTHERWISE NOTED.

SHEET LEGEND

- TEMPORARY PAVEMENT PLACED PRIOR TO THIS PHASE
- TEMPORARY PAVEMENT PLACED DURING THIS PHASE
- WORK AREA

FOR COMPLETE LEGEND AND DRUM SPACING CHART, SEE SHEET 156

0 15 30 60
HORIZONTAL SCALE IN FEET

CALCULATED JAH
CHECKED JML

MAINTENANCE OF TRAFFIC - PHASE 4B-STEP 2
FOURTH ST. CLOSURE AT FULTON ST.

FRA-70-14.54

460E
2317

PLOT.CEL
ms consultants, inc.
msconsultants.com
Ohio DOT Workspace
70\71 East Interchange 2E
www.msconsultants.com
Batchplot Spec: \\msconsultants.com\files\production\03\60\06634_2E\standards\plotdrv\batchplt.spc
Pen Table: \\msconsultants.com\files\Standards\ustn\ohdot\V8i\ms\plotting\pen\V8i_ms_std.tbl
Plot Driver: \\msconsultants.com\files\Standards\ustn\ohdot\v8i\ms\plotting\PDF.pltcfg
34" x 22"
Model: Sheet View: FENCE_VIEW1
Printed: 9/28/2018 @ 10:29:08 AM By: kryan
File: \\msconsultants.com\files\Production\03\60\06634_2E\mot\sheets\105322MP1019.dgn
ms consultants, inc.

PLOT.CEL

ms consultants, inc.
msconsultants.com

www.msconsultants.com

Ohio DOT Workspace
70\71 East Interchange 2E

0 0.5" 1"

Batchplot Spec: \\msconsultants.com\files\production\03\60\06634.2E\standards\plotdrv\batchplt.SPC
Pen Table: \\msconsultants.com\files\Standards\ustn\ohdot\V8\ms\plotting\pen\V8i_ms_std.tbl PDF: ohdotV8i
Plot Driver: \\msconsultants.com\files\Standards\ustn\ohdot\v8\ms\plotting\PDF.pltcfg PLOT: 60-06634_2E_Columbus

Model: Sheet @ 10:29:10 AM View: SHEET
Printed: 9/28/2018 By: kryan
File: \\msconsultants.com\files\Production\03\60\06634.2E\mot\sheets\105322MP1076.dgn

34" x 22"

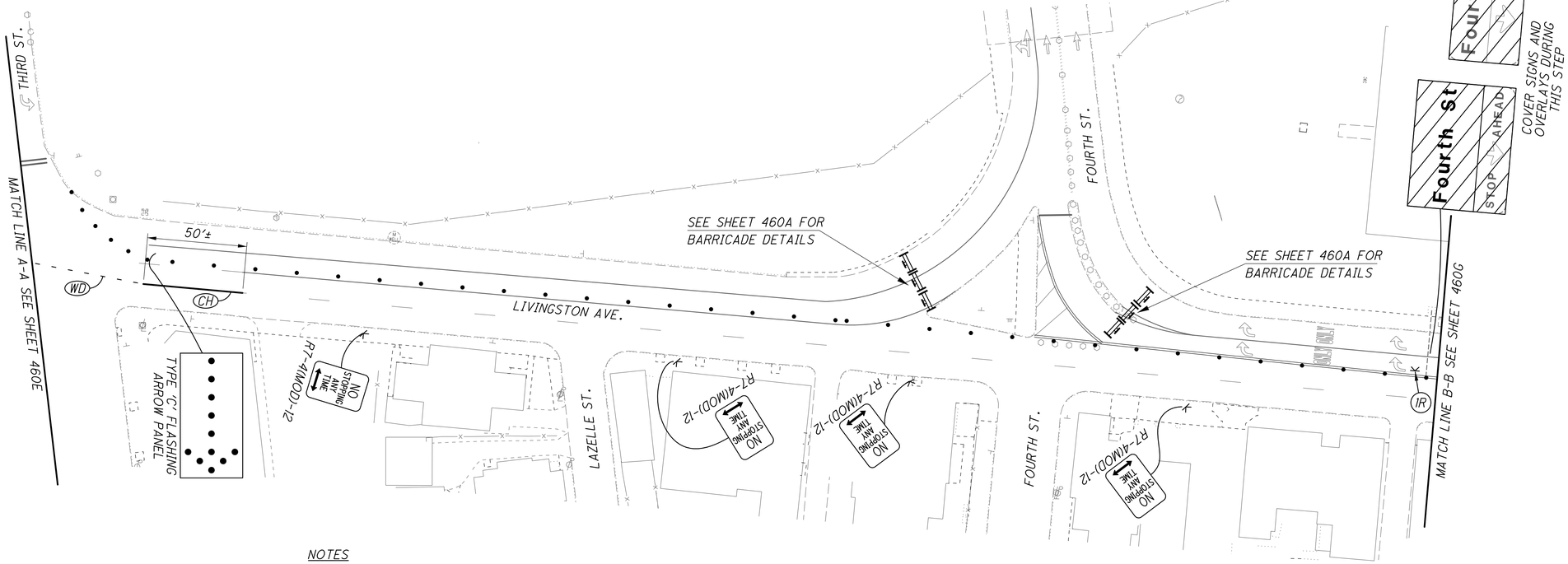

NOTES

1. THE MAINTENANCE OF TRAFFIC SETUP ON LIVINGSTON AVENUE SHALL BE IN EFFECT DURING THE FOURTH STREET AND FULTON STREET INTERSECTION CLOSURE.

2. SEE SHEET 460A FOR THE DETOUR PLAN DURING THE FOURTH STREET AND FULTON STREET INTERSECTION CLOSURE.

3. REMOVE OR COVER ALL EXISTING PARKING SIGNS BETWEEN THIRD STREET AND GRANT AVENUE AND REPLACE WITH TEMPORARY "NO STOPPING ANY TIME" SIGNS (R7-4-12).

4. ALL PAVEMENT MARKINGS ARE EXISTING TO REMAIN OR PLACED IN A PREVIOUS STEP UNLESS OTHERWISE NOTED.

TYPICAL SIGNS

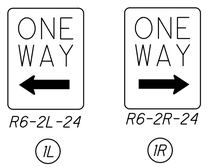

SHEET LEGEND

TEMPORARY PAVEMENT PLACED PRIOR TO THIS PHASE

TEMPORARY PAVEMENT PLACED DURING THIS PHASE

WORK AREA

FOR COMPLETE LEGEND AND DRUM SPACING CHART, SEE SHEET 156

0 15 30 60
HORIZONTAL SCALE IN FEET

CALCULATED JAH
CHECKED JML

MAINTENANCE OF TRAFFIC - PHASE 4B-STEP 2
FOURTH ST. CLOSURE AT FULTON ST.

FRA-70-14.54

460F
2317

ms consultants, inc.

PLOT.CEL

ms consultants, inc.
msconsultants.com

www.msconsultants.com

Ohio DOT Workspace
70\71 East Interchange 2E

Batchplot Spec: \\msconsultants.com\files\production\03\60\06634_2E\standards\plotdr\batchplt.spc
Pen Table: \\msconsultants.com\files\Standards\ustn\ohdot\V8i\ms\plotting\pen\V8i_ms_std.tbl PDF: ohdot\V8i
Plot Driver: \\msconsultants.com\files\Standards\ustn\ohdot\V8i\ms\plotting\PDF.pltcfg PCF: 60-06634_2E_Columbus

Model: Sheet @ 10:29:12 AM View: FENCE_VIEW1
Printed: 9/28/2018 By: kryan
File: \\msconsultants.com\files\Production\03\60\06634_2E\mot\sheets\105322MP1020.dgn

34" x 22"

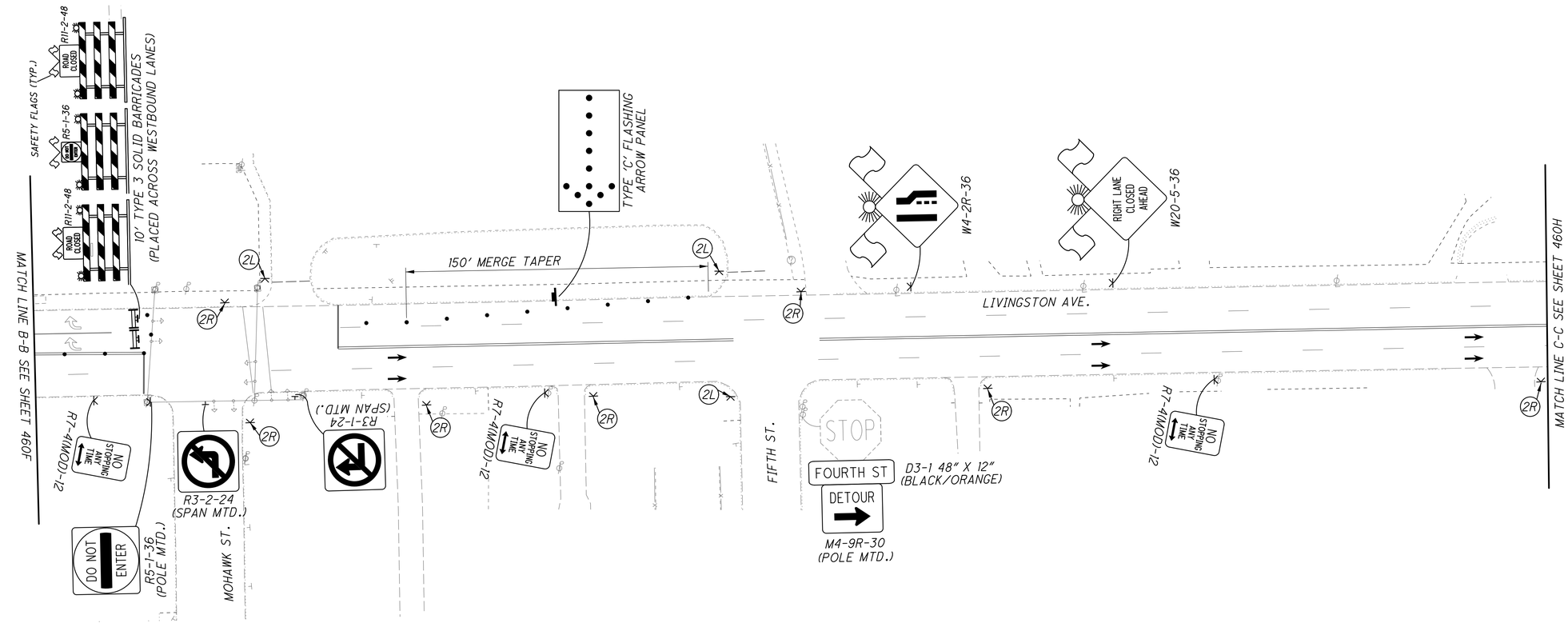

NOTES

1. THE MAINTENANCE OF TRAFFIC SETUP ON LIVINGSTON AVENUE SHALL BE IN EFFECT DURING THE FOURTH STREET AND FULTON STREET INTERSECTION CLOSURE.

2. SEE SHEET 460A FOR THE DETOUR PLAN DURING THE FOURTH STREET AND FULTON STREET INTERSECTION CLOSURE.

3. REMOVE OR COVER ALL EXISTING PARKING SIGNS BETWEEN THIRD STREET AND GRANT AVENUE AND REPLACE WITH TEMPORARY "NO STOPPING ANY TIME" SIGNS (R7-4-12).

4. ALL PAVEMENT MARKINGS ARE EXISTING TO REMAIN OR PLACED IN A PREVIOUS STEP UNLESS OTHERWISE NOTED.

TYPICAL SIGNS

D3-1 48" X 12" (BLACK/ORANGE)

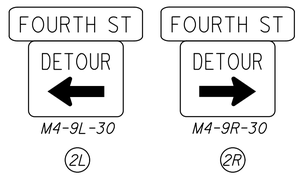

SHEET LEGEND

TEMPORARY PAVEMENT PLACED PRIOR TO THIS PHASE

TEMPORARY PAVEMENT PLACED DURING THIS PHASE

WORK AREA

FOR COMPLETE LEGEND AND DRUM SPACING CHART, SEE SHEET 156

N

0 15 30 60
HORIZONTAL SCALE IN FEET

CALCULATED JAH
CHECKED JML

MAINTENANCE OF TRAFFIC - PHASE 4B-STEP 2
FOURTH ST. CLOSURE AT FULTON ST.

FRA-70-14.54

460G
2317

PLOT.CEL

ms consultants, inc.
msconsultants.com

www.msconsultants.com
Ohio DOT Workspace
70\71 East Interchange 2E

1"
0.5"
0

Batchplot Spec: \\msconsultants.com\files\production\03\60\06634_2E\standards\plotdrv\batchplt.spc
Pen Table: \\msconsultants.com\files\Standards\ustn\ohdot\V8i\ms\plotting\pen\V8i_ms_std.tbl
Plot Driver: \\msconsultants.com\files\Standards\ustn\ohdot\v8i\ms\plotting\PDF.pltcfg
PDF: ohdotV8i
PCF: 60-06634_2E_Columbus

Model: Sheet
Printed: 9/28/2018 @ 10:29:15 AM
File: \\msconsultants.com\files\Production\03\60\06634_2E\mot\sheets\05322MP1077.dgn
View: FENCE_VIEW1
By: kryan

34" x 22"

NOTES

1. THE MAINTENANCE OF TRAFFIC SETUP ON LIVINGSTON AVENUE SHALL BE IN EFFECT DURING THE FOURTH STREET AND FULTON STREET INTERSECTION CLOSURE.

2. SEE SHEET 460A FOR THE DETOUR PLAN DURING THE FOURTH STREET AND FULTON STREET INTERSECTION CLOSURE.

3. REMOVE OR COVER ALL EXISTING PARKING SIGNS BETWEEN THIRD STREET AND GRANT AVENUE AND REPLACE WITH TEMPORARY "NO STOPPING ANY TIME" SIGNS (R7-4-12).

4. ALL PAVEMENT MARKINGS ARE EXISTING TO REMAIN OR PLACED IN A PREVIOUS STEP UNLESS OTHERWISE NOTED.

TYPICAL SIGNS

D3-1 48" X 12" (BLACK/ORANGE)

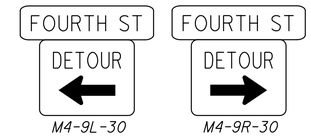

M4-9L-30 (2L) M4-9R-30 (2R)

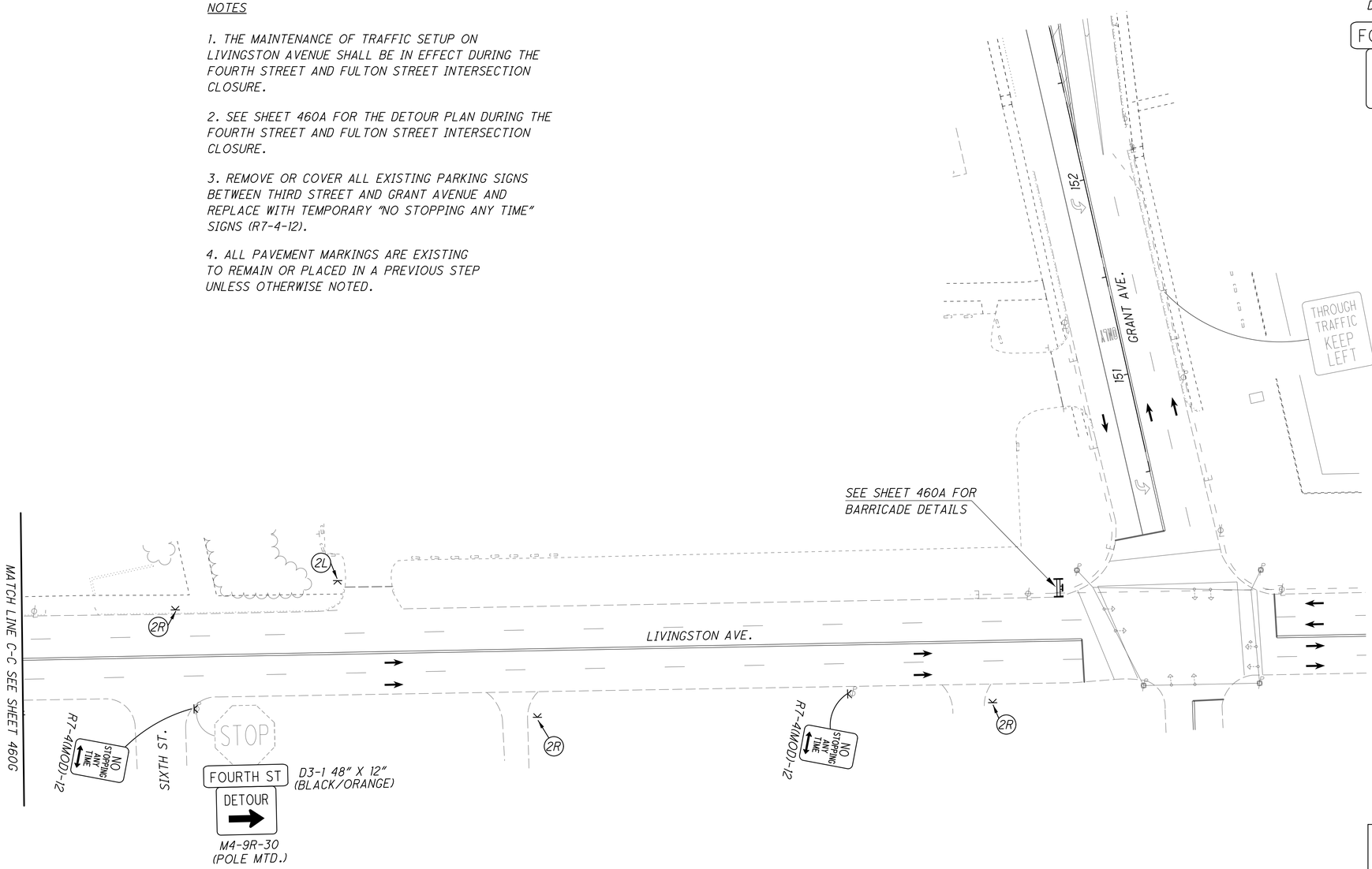

SHEET LEGEND

- TEMPORARY PAVEMENT PLACED PRIOR TO THIS PHASE
- TEMPORARY PAVEMENT PLACED DURING THIS PHASE
- WORK AREA

FOR COMPLETE LEGEND AND DRUM SPACING CHART, SEE SHEET 156

HORIZONTAL SCALE IN FEET
0 15 30 60

CALCULATED JAH
CHECKED JML

MAINTENANCE OF TRAFFIC - PHASE 4B-STEP 2
FOURTH ST. CLOSURE AT FULTON ST.

FRA-70-14.54

460H
2317

ms consultants, inc.

NOTE

1. ALL PAVEMENT MARKINGS ARE EXISTING TO REMAIN OR PLACED IN A PREVIOUS STEP UNLESS OTHERWISE NOTED.

2. ALL DOWNWARD ARROWS ON OVERHEAD SIGNS SHALL BE PLACED OVER THE CENTER OF TRAVEL LANE.

Grant Ave

ONLY

EAST 70

EAST 70

Grant Ave

(PLACE SIGNS AS PER TC PLAN) STA. 45+60

WEST 70 RIGHT 2 LANES

(PLACED IN PREVIOUS PHASE)

STA. 91+88.22, ℄ EX. I-70 =
STA. 767+00, ℄ PROP. I-70 =
STA. 1117+4.45, ℄ TR-1D

(SIGNS PLACED IN PREVIOUS PHASE) REMOVE COVER PLACED IN PREVIOUS PHASE

Washington Ave

Wheeling

70 EAST

FRA-70-1461

FULTON ST.

I-70 WB

I-70 EB

RAMP N4

RAMP N1

130" PB FLARE (14:1)

MATCH LINE STA. 772+00, SEE SHEET 462

BEGIN 32" PB
(PLACED IN PREVIOUS PHASE)

END 32" PB
MEET EXISTING MEDIAN BARRIER
(PLACED IN PREVIOUS PHASE)

EXIT 101B

(PLACED IN PREVIOUS PHASE)

32" PB PLACED IN PREVIOUS PHASE

50" PB PLACED IN PREVIOUS PHASE

GRANT AVE.

(SIGNS PLACED IN PREVIOUS PHASE)

Wheeling

70 EAST

Cleveland

EXIT ONLY

71 NORTH

670 TO

EXIT 101A

SHEET LEGEND

TEMPORARY PAVEMENT PLACED PRIOR TO THIS PHASE

TEMPORARY PAVEMENT PLACED DURING THIS PHASE

WORK AREA

FOR COMPLETE LEGEND AND DRUM SPACING CHART, SEE SHEET 156

HORIZONTAL SCALE IN FEET
0 20 40 80

CALCULATED JAH
CHECKED JML

MAINTENANCE OF TRAFFIC - PHASE 4B-STEP 2
RAMP N3 OPEN

FRA-70-14.54

461
2317

PLOT.CEL

ms consultants, inc.
msconsultants.com

www.msconsultants.com

Ohio DOT Workspace
70\71 East Interchange 2E

1"
0.5"
0

Batchplot Spec: \\msconsultants.com\Files\Standards\ustn\ohdot\V8i\ms\plotting\pen\V8i_ms_std.tbl
Pen Table: \\msconsultants.com\Files\Standards\ustn\ohdot\V8i\ms\plotting\pen\V8i_ms_std.tbl
Plot Driver: \\msconsultants.com\Files\Standards\ustn\ohdot\v8i\ms\plotting\PDF.pltcfg

Batchplot Spec: \\msconsultants.com\Files\Production\03\60\06634.2E\standards\plotdrv\batchplt.spc
PDF: ohdot\V8i
PDF: 60-06634_2E_Columbus

34" x 22"

View: FENCE_VIEW1
By: kryan

Model: Sheet
Printed: 9/28/2018 @ 10:29:33 AM
File: N:\03\60\06634.2E\mot\sheets\05322MP4035.dgn

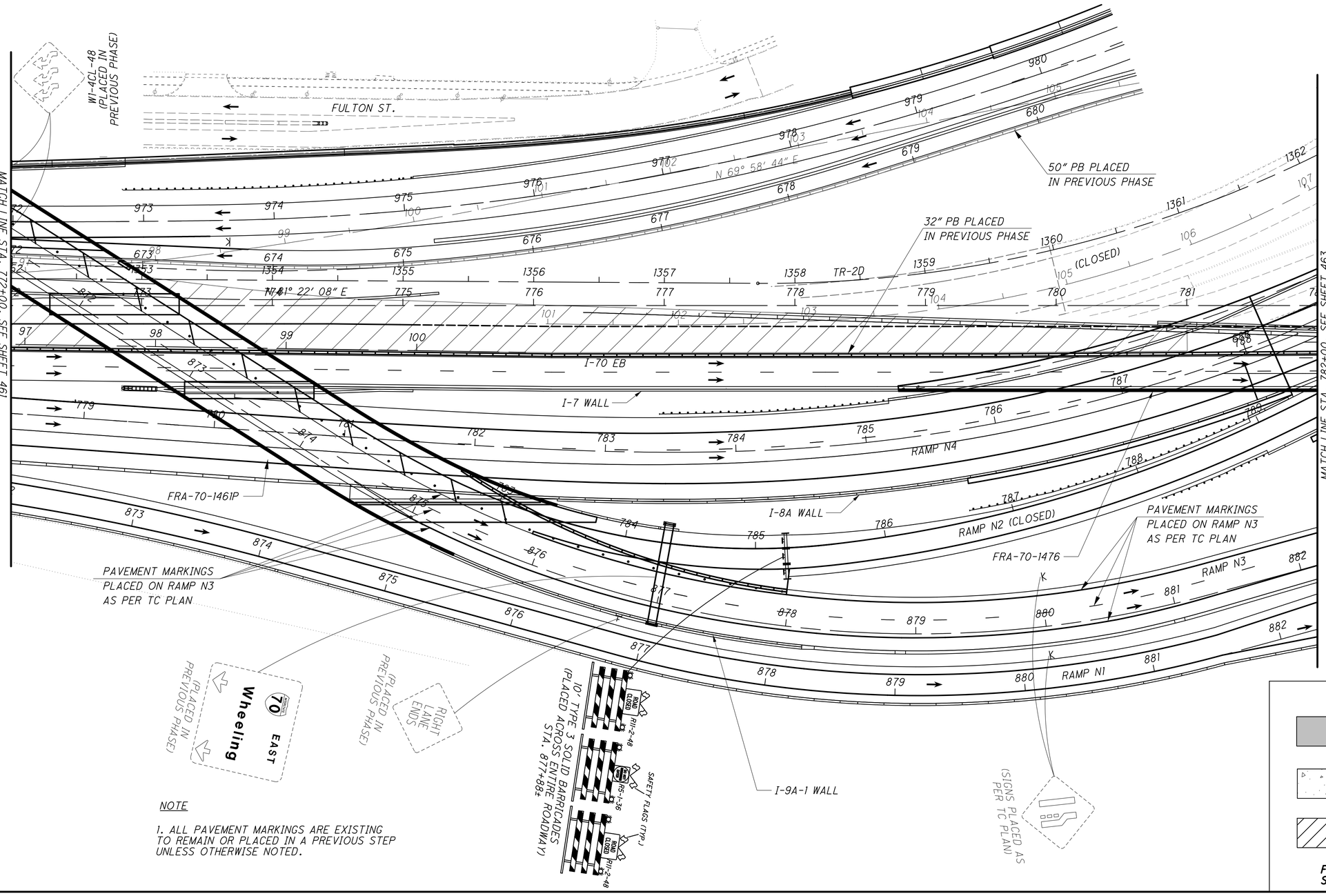

NOTE

1. ALL PAVEMENT MARKINGS ARE EXISTING TO REMAIN OR PLACED IN A PREVIOUS STEP UNLESS OTHERWISE NOTED.

SHEET LEGEND

- TEMPORARY PAVEMENT PLACED PRIOR TO THIS PHASE
- TEMPORARY PAVEMENT PLACED DURING THIS PHASE
- WORK AREA

FOR COMPLETE LEGEND AND DRUM SPACING CHART, SEE SHEET 156

HORIZONTAL SCALE IN FEET
0 20 40 80

CALCULATED JAH
CHECKED JML

MAINTENANCE OF TRAFFIC - PHASE 4B-STEP 2
RAMP N3 OPEN

FRA-70-14.54

462
2317

PLOT.CEL

ms consultants, inc.
msconsultants.com

www.msconsultants.com

Ohio DOT Workspace
70\71 East Interchange 2E

Batchplot Spec: \\msconsultants.com\files\production\03\60\06634_2E\standards\plotdrv\batchplt.spec
Pen Table: \\msconsultants.com\files\Standards\usitn\ohdot\V8i\ms\plotting\pen\V8i_ms_std.tbl
Plot Driver: \\msconsultants.com\files\Standards\usitn\ohdot\V8i\ms\plotting\PDF.pltcfg

PDF: ohdotV8i
DGN: 60-06634_2E_Columbus

Model: Sheet
Printed: 9/28/2018 @ 10:29:38 AM
File: N:\03\60\06634_2E\mot\sheets\105229MP4036.dgn

View: FENCE_VIEW1
By: kryan

34" x 22"

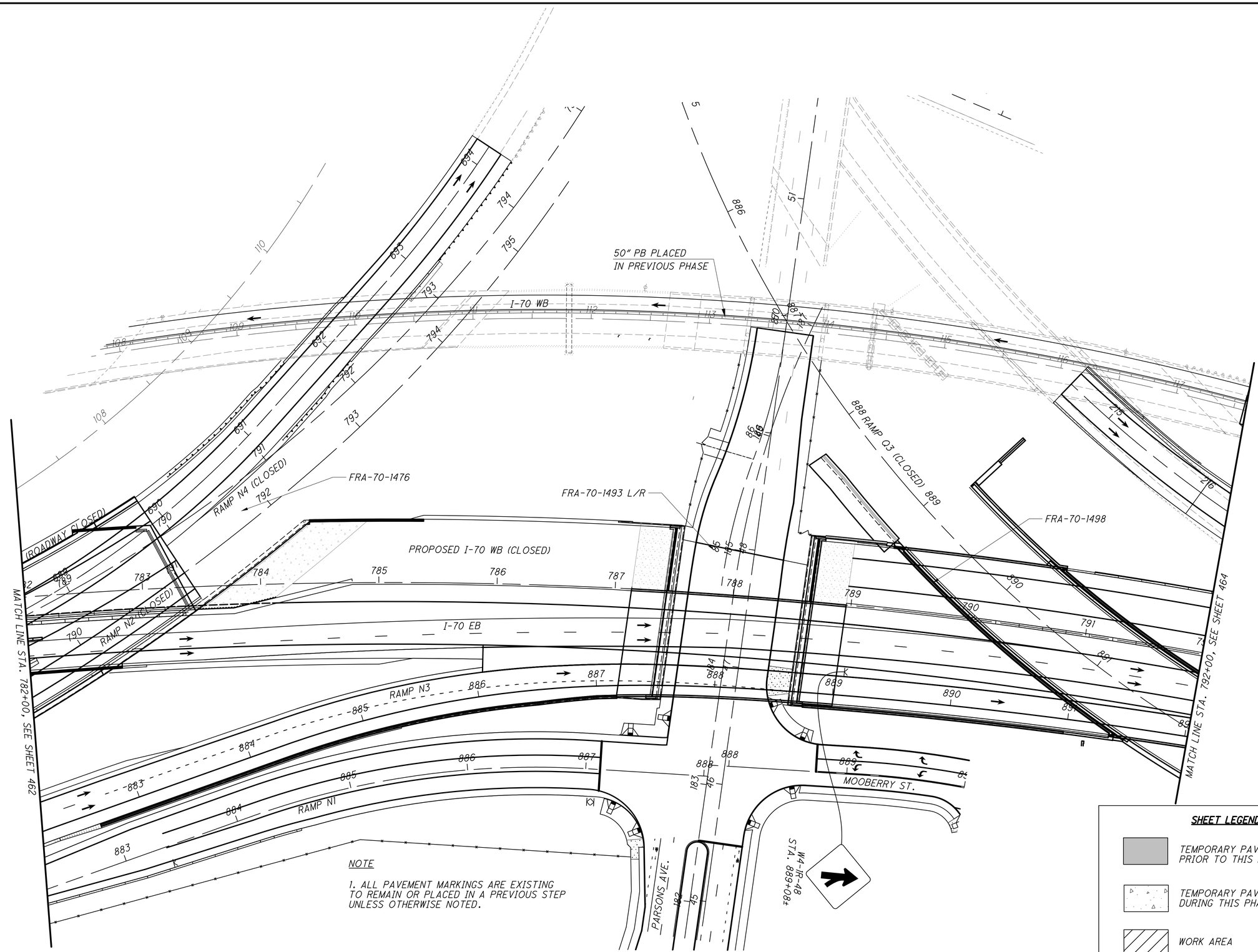

NOTE

1. ALL PAVEMENT MARKINGS ARE EXISTING TO REMAIN OR PLACED IN A PREVIOUS STEP UNLESS OTHERWISE NOTED.

SHEET LEGEND

- TEMPORARY PAVEMENT PLACED PRIOR TO THIS PHASE
- TEMPORARY PAVEMENT PLACED DURING THIS PHASE
- WORK AREA

FOR COMPLETE LEGEND AND DRUM SPACING CHART, SEE SHEET 156

HORIZONTAL SCALE IN FEET
0 20 40 80

CALCULATED JAH
CHECKED JML

MAINTENANCE OF TRAFFIC - PHASE 4B-STEP 2
RAMP N3 OPEN

FRA-70-14.54

463
2317

ms consultants, inc.

PLOT.CEL

ms consultants, inc.
rmsconsultants.com

www.rmsconsultants.com

Ohio DOT Workspace
70\71 East Interchange 2E

0 0.5" 1"

Batchplot Spec: \\rmsconsultants.com\Files\production\03\60\06634_2E\standards\plotdrv\batchplt.spc
Pen Table: \\rmsconsultants.com\Files\Standards\ustn\ohdot\V8i\ms\plotting\pen\V8i_ms_std.tbl
Plot Driver: \\rmsconsultants.com\Files\Standards\ustn\ohdot\V8i\ms\plotting\PDF_ohdotV8i
PDF: 60-06634_2E_Columbus

Model: Sheet
Printed: 9/28/2018 @ 10:29:44 AM
File: N:\03\60\06634_2E\rmol\sheets\105322MP4037.dgn
View: FENCE_VIEW1
By: kryan

34" x 22"

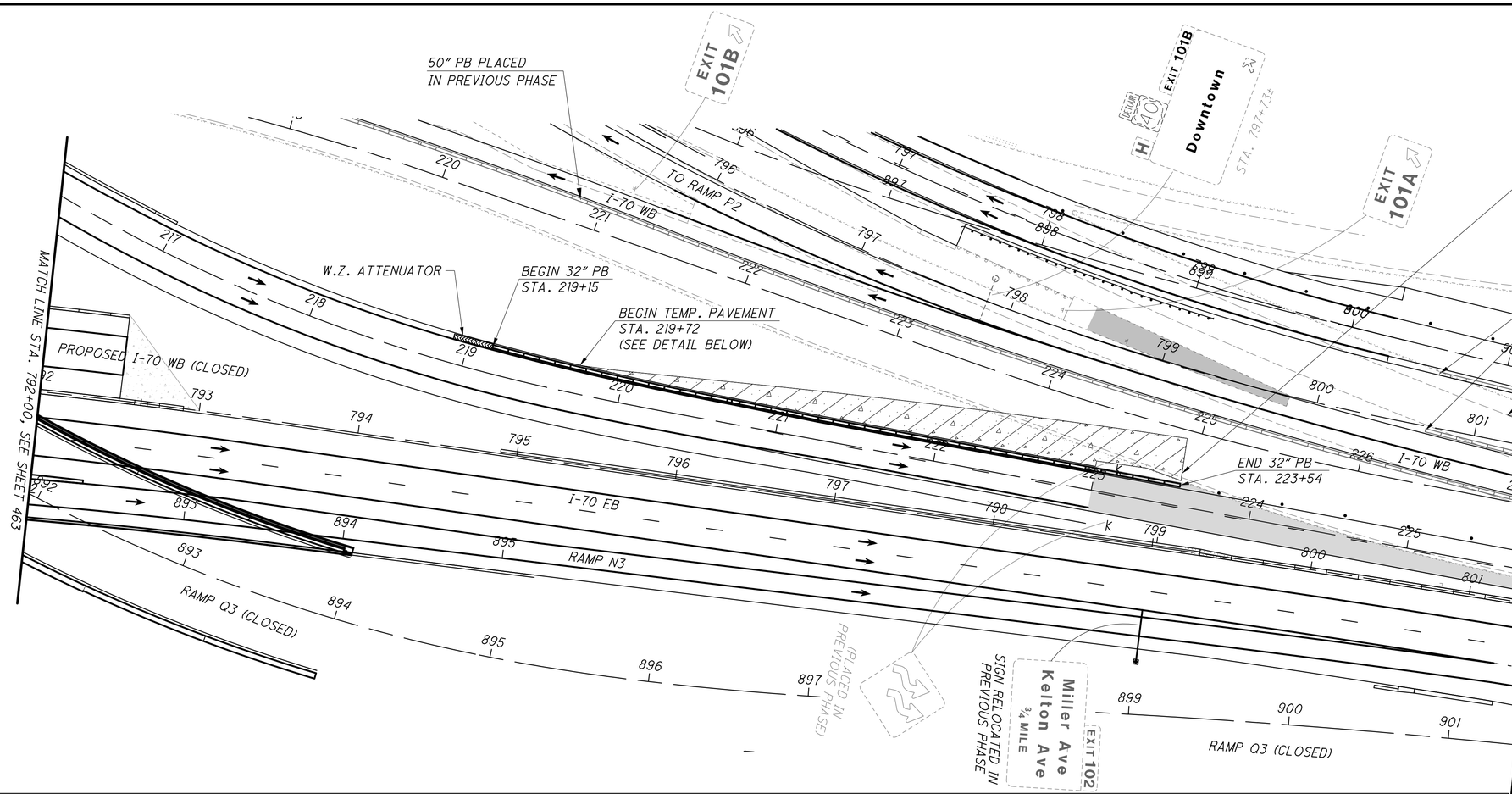

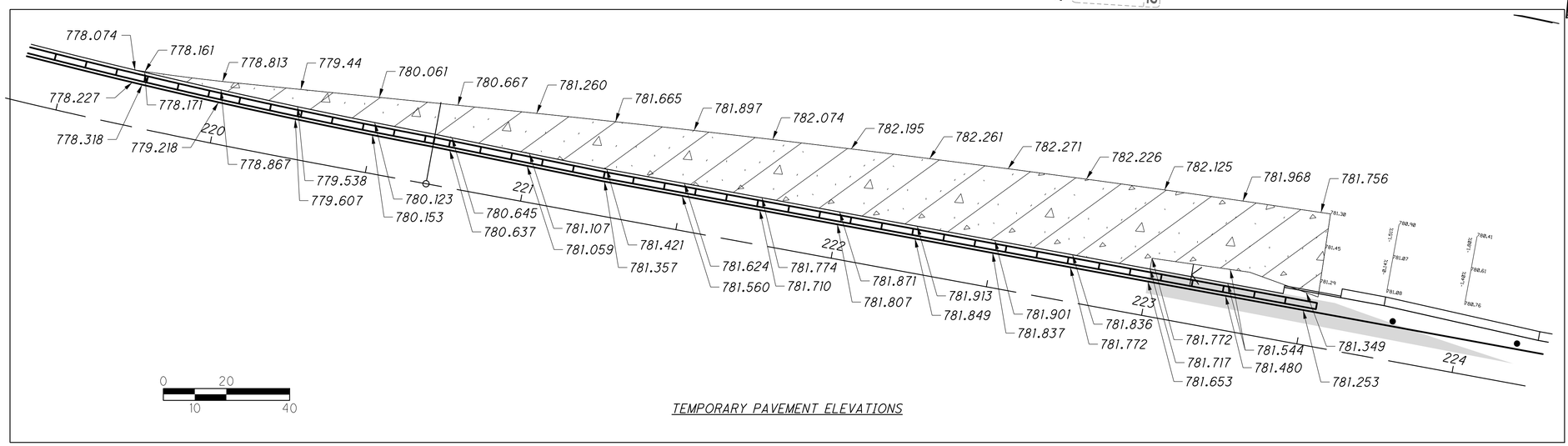

TEMPORARY PAVEMENT ELEVATIONS

NOTE

1. ALL PAVEMENT MARKINGS ARE EXISTING TO REMAIN OR PLACED IN A PREVIOUS STEP UNLESS OTHERWISE NOTED.

SHEET LEGEND

- TEMPORARY PAVEMENT PLACED PRIOR TO THIS PHASE
- TEMPORARY PAVEMENT PLACED DURING THIS PHASE
- WORK AREA

FOR COMPLETE LEGEND AND DRUM SPACING CHART, SEE SHEET 156

HORIZONTAL SCALE IN FEET
0 20 40 80

CALCULATED JAH
CHECKED JML

MAINTENANCE OF TRAFFIC - PHASE 4B-STEP 2
RAMP N3 OPEN

FRA-70-14.54

464
2317

ms consultants, inc.

PLOT.CEL

ms consultants, inc.
msconsultants.com

www.msconsultants.com

Ohio DOT Workspace
70\71 East Interchange 2E

Batchplot Spec: \\msconsultants.com\files\production\03\60\06634_2E\standards\plotdir\batchplt.spc
Pen Table: \\msconsultants.com\files\Standards\ustn\ohdot\V8i\ms\plotting\pen\V8i_ms_std.tbl
Plot Driver: \\msconsultants.com\files\Standards\ustn\ohdot\V8i\ms\plotting\PDF.pltcfg

Model: Sheet
Printed: 9/28/2018 @ 10:29:49 AM
File: N:\03\60\06634_2E\mot\sheets\105322MP4038.dgn

View: FENCE_VIEW1
By: kryan

34" x 22"

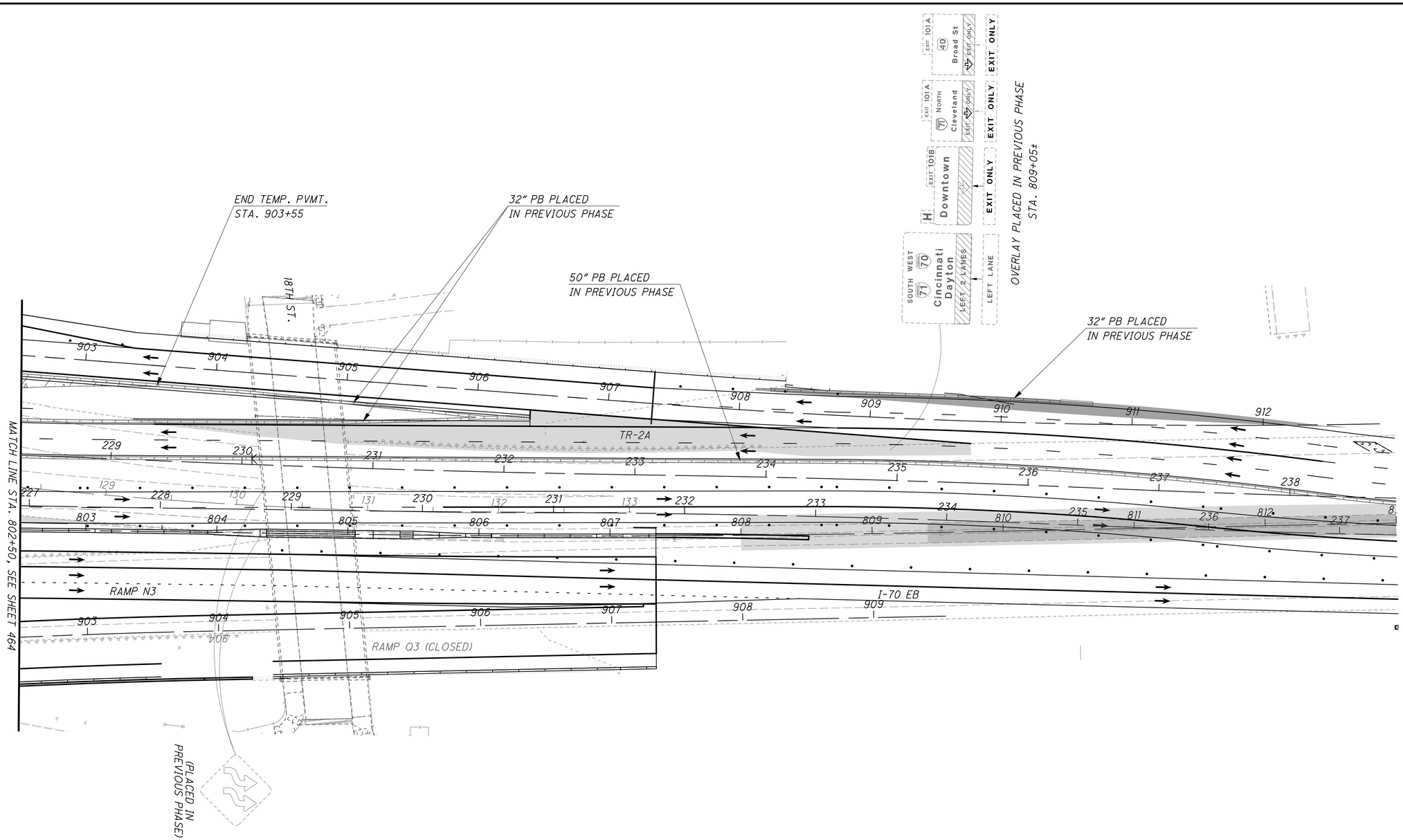

NOTE

1. ALL PAVEMENT MARKINGS ARE EXISTING TO REMAIN OR PLACED IN A PREVIOUS STEP UNLESS OTHERWISE NOTED.

2. ALL DOWNWARD ARROWS ON OVERHEAD SIGNS SHALL BE PLACED OVER THE CENTER OF TRAVEL LANE.

SHEET LEGEND

- TEMPORARY PAVEMENT PLACED PRIOR TO THIS PHASE
- TEMPORARY PAVEMENT PLACED DURING THIS PHASE
- WORK AREA

FOR COMPLETE LEGEND AND DRUM SPACING CHART, SEE SHEET 156

HORIZONTAL SCALE IN FEET
0 20 40 80

CALCULATED JAH
CHECKED JML

MAINTENANCE OF TRAFFIC - PHASE 4B-STEP 2
RAMP N3 OPEN

FRA-70-14.54

464A
2317

34" x 22"

Model: Sheet
Printed: 9/28/2018 @ 10:29:54 AM
File: N:\03\60\06634_2E\mot\sheets\105322MB6001.dgn
View: FENCE_VIEW1
By: kryan

Batchplot Spec: \\msconsultants.com\files\production\03\60\06634_2E\standards\plotdrv\batchplt.spc
Pen Table: \\msconsultants.com\files\Standards\ustn\ohdot\V8i\ms\plotting\pen\V8i_ms_std.tbl
Plot Driver: \\msconsultants.com\files\Standards\ustn\ohdot\v8i\ms\plotting\PDF.pltcfg

0 1"
0.5"

PCF: ohdotV8i
PCF: 60-06634_2E_Columbus

Ohio DOT Workspace
70\71 East Interchange 2E

PLOT.CEL

ms consultants, inc.
msconsultants.com

www.msconsultants.com

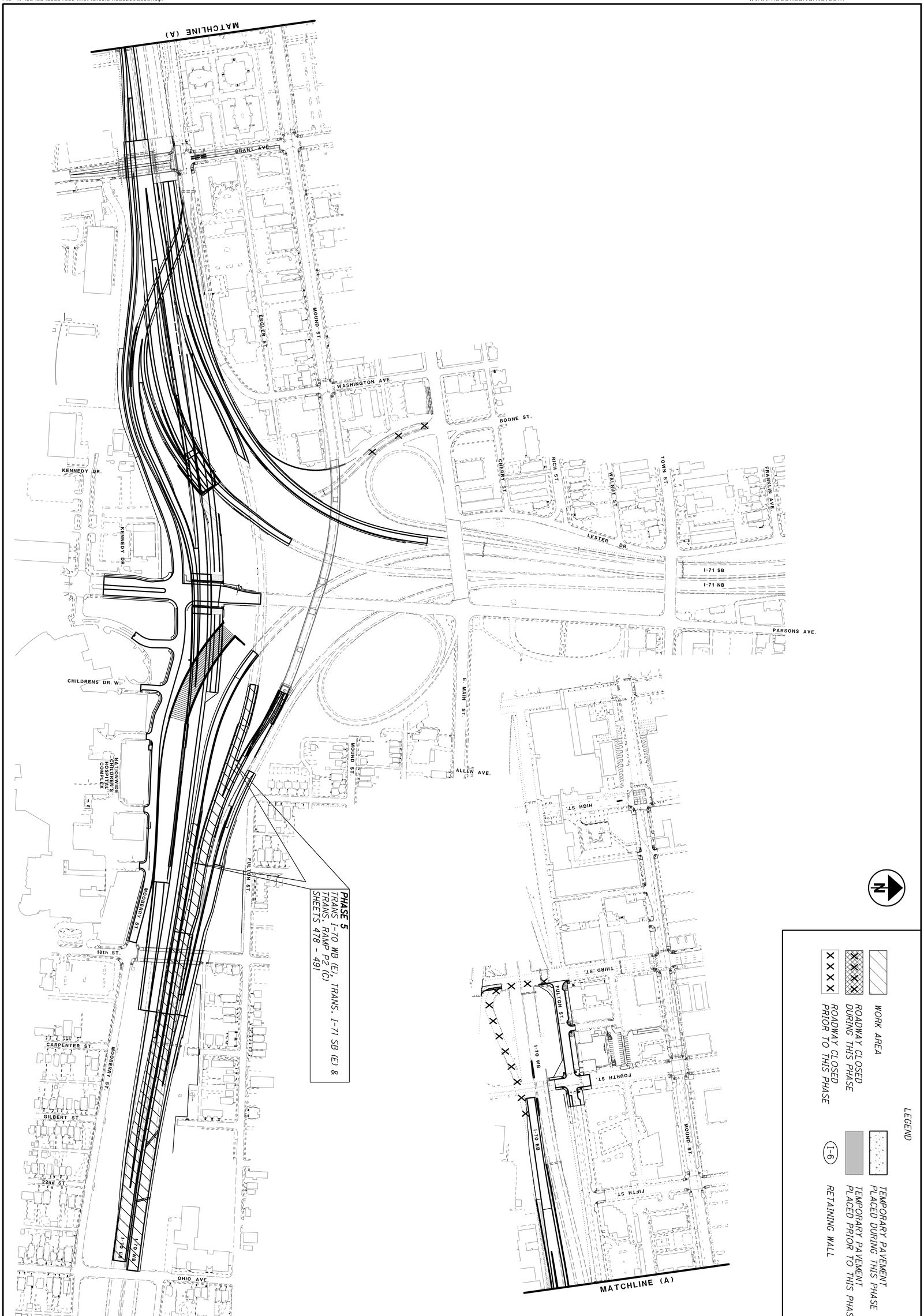

PHASE 5
TRANS I-70 WB (E), TRANS. I-71 SB (E) & TRANS. RAMP P2 (C)
SHEETS 478 - 491

LEGEND

- WORK AREA
- ROADWAY CLOSED DURING THIS PHASE
- ROADWAY CLOSED PRIOR TO THIS PHASE
- TEMPORARY PAVEMENT PLACED DURING THIS PHASE
- TEMPORARY PAVEMENT PLACED PRIOR TO THIS PHASE
- (1-6) RETAINING WALL

PLOT.CEL
ms consultants, inc.
msconsultants.com
www.msconsultants.com
Ohio DOT Workspace
70\71 East Interchange 2E
0 0.5" 1"
Batchplot Spec: \\msconsultants.com\files\Production\03\60\06634_2E\standards\plotdrv\batchplt.spc
Pen Table: \\msconsultants.com\files\Standards\ustn\ohdot\V8i\ms\plotting\pen\V8i_ms_std.tbl
Plot Driver: \\msconsultants.com\files\Standards\ustn\ohdot\v8i\ms\plotting\PDF.pltcfg
PDF: ohdot\V8i
PCF: 60-06634_2E_Columbus
Model: Sheet
Printed: 1/8/2019 @ 3:03:56 PM
File: \\msconsultants.com\files\Production\03\60\06634_2E\mot\sheets\105322MN6007.dgn
View: FENCE_VIEW1
By: kryan
34" x 22"

PHASE 5 SEQUENCE OF CONSTRUCTION

AT THE BEGINNING OF PHASE 5, STEP 1 THE "RIGHT LANE ENDS MERGE LEFT" SIGN SHALL BE UNCOVERED OR RE-INSTALLED IF IT WAS TAKEN DOWN IN PHASE 1B, STEP 1. ALSO, OVERLAYS OVER THE DOWN ARROWS SHALL BE INSTALLED PER THE PERMANENT TRAFFIC CONTROL PLAN AT THE I-71 SB SPLIT TO I-70 E/W (SEE SHEET 1334 FOR ADDITIONAL INFORMATION).

PHASE 5 (SHEETS 478 - 491)

STEP 1

1) SHIFT TWO LANE I-71 SB TO I-70 EB TRAFFIC TO NORTH SIDE OF TR-2B.

2) CONSTRUCT SOUTHERN PORTION OF TRANS I-71 SB (E).

STEP 2

1) REDUCE I-71 SB TO ONE LANE UNDER PARSONS AVENUE BRIDGE OVER I-71 SB TO I-70 EB RAMP. THIS LANE REDUCTION IS RESTRICTED TO ONE WEEKEND.

2) CONSTRUCT REMAINING PORTION OF TRANS I-71 SB (E). SWITCH TWO LANES TO NEW TRANS I-71 SB (E) PAVEMENT.

3) SHIFT ONE LANE OF I-70 WB TRAFFIC TO NORTH SIDE OF FLYOVER BRIDGE. CONSTRUCT PARTIAL TRANS I-70 WB (E).

STEP 3

1) SWITCH ONE LANE OF I-70 WB TRAFFIC TO NEW TRANS I-70 WB (E) PAVEMENT AND SHIFT ONE LANE OF TRAFFIC TO NORTH SIDE OF EXISTING RAMP P2.

2) CONSTRUCT REMAINING PORTION OF TRANS I-70 WB (E).

STEP 4

1) SWITCH ONE LANE TO NEW TRANS P2 PAVEMENT. CONSTRUCT REMAINING PORTION OF TRANS RAMP P2.

2) RECONSTRUCT EXISTING WALL BETWEEN TRANS RAMP P2 AND TRANS I-71 NB.

3) COMPLETE MILL AND OVERLAY OF REMAINING TIE-IN LOCATIONS OF NEW TRANSITIONAL PAVEMENTS TO EXISTING PAVEMENTS.

CALCULATED JAH
CHECKED JML

PHASE 5 - SEQUENCE OF CONSTRUCTION

FRA-70-14.54

476
2317

ms consultants, inc.

PLOT.CEL

ms consultants, inc.
msconsultants.com

www.msconsultants.com

Ohio DOT Workspace
70\71 East Interchange 2E

0 0.5" 1"

PDF: ohdot\V8i
PCF: 60-06634_2E_Columbus

Batchplot Spec: \\msconsultants.com\files\production\Q3\60\06634_2E\standards\ohdot\v8i\batchplt.spc
Pen Table: \\msconsultants.com\files\Standards\usth\ohdot\V8i\ms\plotting\pen\V8i_ms_std.tbl
Plot Driver: \\msconsultants.com\files\Standards\usth\ohdot\v8i\ms\plotting\PDF.pltcfg

Model: Sheet
Printed: 9/28/2018 @ 10:30:02 AM View: FENCE_VIEW1
By: kryan
File: N:\03\60\06634_2E\mot\sheets\105322MN0008.dgn

34" x 22"

CALCULATED JAH
CHECKED JML

PHASE 5 SUMMARY

PERMANENT ROADWAY CONSTRUCTION
- TRANS. I-71 SB (EAST)
- TRANS. I70 WB (EAST)
- TRANS. RAMP P2 (CENTRAL)

CONSTRUCTION AVAILABLE THIS PHASE

CHILDREN'S HOSPITAL ACCESS DURING THIS PHASE

- GRANT AVENUE OPEN
- 18" STREET OPEN
- RAMP N1 TO PARSONS AVENUE/MOOBERRY STREET OPEN

NOTE: SEE SHEET 111 FOR DISINCENTIVE AMOUNTS ASSOCIATED WITH ANY MAINLINE ROADWAY OR SYSTEM RAMP OVERNIGHT CLOSURE REQUIRED IN THIS PHASE.

PROPOSED ROADWAY DESCRIPTIONS	
ROAD NAME	**DESCRIPTION (DIRECTION OF STATIONING)**
RAMP Q1	I-71 SB TO I-70 WB
RAMP Q3	I-71 SB TO I-70 EB
RAMP N4	I-70 EB TO I-71 NB
RAMP P4	I-70 WB TO I-71 NB
RAMP P5	I-70 WB TO I-670
RAMP N1	I-70 EB TO PARSONS AVE
RAMP N2	FULTON ST EB (BY WAY OF RAMP N3) TO I-71 NB
RAMP N3	FULTON ST EB TO I-70 EB
RAMP P1	I-70 WB (BY WAY OF RAMP P2) TO PARSONS AVE
RAMP P2	I-70 WB TO MOUND ST WB
RAMP P6	MAIN ST TO I-71 NB/I-670

TEMPORARY ROADWAY DESCRIPTIONS	
PLAN VIEW LABEL	**DESCRIPTION**
TR-1B	TEMP I-70 EB TO I-71 NB
TR-1D	TEMP I-70 EB
TR-2A	TEMP I-70 EB/WB CONNECTION
TR-2D	TEMP I-70 EB TO I-71 NB
TR-2F	TEMP I-70 EB EXIT TO 18TH ST
TR-2G	TEMP MOOBERRY ST CONNECTION

PHASE 5 - SUMMARY & DISINCENTIVE CHART

FRA-70-14.54

PLOT.CEL

ms consultants, inc.
msconsultants.com

www.msconsultants.com

Ohio DOT Workspace
70\71 East Interchange 2E

PDF: ohdot\V8i
DCF: 60-06634_2E_Columbus

Batchplot Spec: \\msconsultants.com\Files\production\03\60\06634_2E\standards\plotdr\batchplt.spc
Pen Table: \\msconsultants.com\Files\Standards\usetn\ohdot\V8i\ms\plotting\pen\V8i_ms_std.tbl
Plot Driver: \\msconsultants.com\Files\Standards\usetn\ohdot\v8i\ms\plotting\PDF.pltcfg

Model: Sheet
Printed: 9/28/2018 @ 10:30:14 AM
File: N:\03\60\06634_2E\mot\sheets\103220MP6010.dgn
View: FENCE_VIEW1
By: kryan

34" x 22"

NOTES:

1. ALL PAVEMENT MARKINGS ARE EXISTING TO REMAIN OR PLACED IN A PREVIOUS MAINTENANCE OF TRAFFIC PHASE UNLESS OTHERWISE NOTED.

2. PROVIDE ACCESS POINT IN ACCORDANCE WITH MT-103.10. RELOCATE THE ACCESS POINT, AS NEEDED, WITH THE ENGINEER'S APPROVAL, TO COMPLETE ALL CONSTRUCTION ACTIVITIES.

W1-4BR-48 STA. 208+00±

PARSONS AVE.

RAMP P2

392' SHIFT TAPER

BEGIN WE, LL & YE
MEET EXISTING PAVEMENT MARKINGS
STA. 891+76±

W1-1L6-36
STA. 792+71
STA. 793+71
STA. 794+71
STA. 795+71

+71.00

I-71 NB

MOUND ST. EXIT

BEGIN CH
STA. 215+00

BEGIN WE & YE
MEET EXISTING PAVEMENT MARKINGS
STA. 116+90±

BEGIN YE & WE
STA. 795+95

W1-1L6-36
STA. 218+00
STA. 219+00
STA. 220+00

BEGIN YE & WE
STA. 218+00

BEGIN 50" PB
STA. 220+82

W.Z. ATTENUATOR

I-71 SB

I-70 WB

W1-1BR-48
STA. 789+50
(BARRIER MTD.)

W.Z. ATTENUATOR

BEGIN 32" PB
STA. 217+30

I-70 WB (CLOSED)

I-70 EB

RAMP N3 890

RAMP Q3 (CLOSED)

MOOBERRY ST.

FINAL PAVEMENT MARKINGS PLACED PER TC PLANS

W4-1R-30
STA. 785+50±
(PLACED IN GORE AREA)

MATCH LINE STA. 221+00, SEE SHEET 479

SHEET LEGEND

- TEMPORARY PAVEMENT PLACED PRIOR TO THIS PHASE
- TEMPORARY PAVEMENT PLACED DURING THIS PHASE
- WORK AREA

FOR COMPLETE LEGEND AND DRUM SPACING CHART, SEE SHEET 156

HORIZONTAL SCALE IN FEET
0 20 40 80

CALCULATED JAH
CHECKED JML

MAINTENANCE OF TRAFFIC - PHASE 5-STEP 1
PARTIAL TRANS. I71 SB CONSTRUCTION

FRA-70-14.54

478
2317

PLOT.CEL

ms consultants, inc.
msconsultants.com

www.msconsultants.com

Ohio DOT Workspace
70\71 East Interchange 2E

0 0.5" 1"

34" x 22"

Batchplot Spec: \\msconsultants.com\files\production\03\60\06634.2E\standards\plotdrv\batchplt.spc
Pen Table: \\msconsultants.com\files\Standards\ustn\ohdot\V8i\ms\plotting\pen\V8i_ms_std.tbl
Plot Driver: \\msconsultants.com\files\Standards\ustn\ohdot\v8i\ms\plotting\PDF.pltcfg

PDF: ohdot\V8i
PDF: 60-06634_2E_Columbus

Model: Sheet
Printed: 9/28/2018 @ 10:30:19 AM
File: N:\03\60\06634_2E\mot\sheets\105322MP601f.dgn

View: FENCE_VIEW1
By: Kryan

NOTES:

1. ALL PAVEMENT MARKINGS ARE EXISTING TO REMAIN OR PLACED IN A PREVIOUS MAINTENANCE OF TRAFFIC PHASE UNLESS OTHERWISE NOTED.

2. PROVIDE ACCESS POINT IN ACCORDANCE WITH MT-103.10. RELOCATE THE ACCESS POINT, AS NEEDED, WITH THE ENGINEER'S APPROVAL, TO COMPLETE ALL CONSTRUCTION ACTIVITIES.

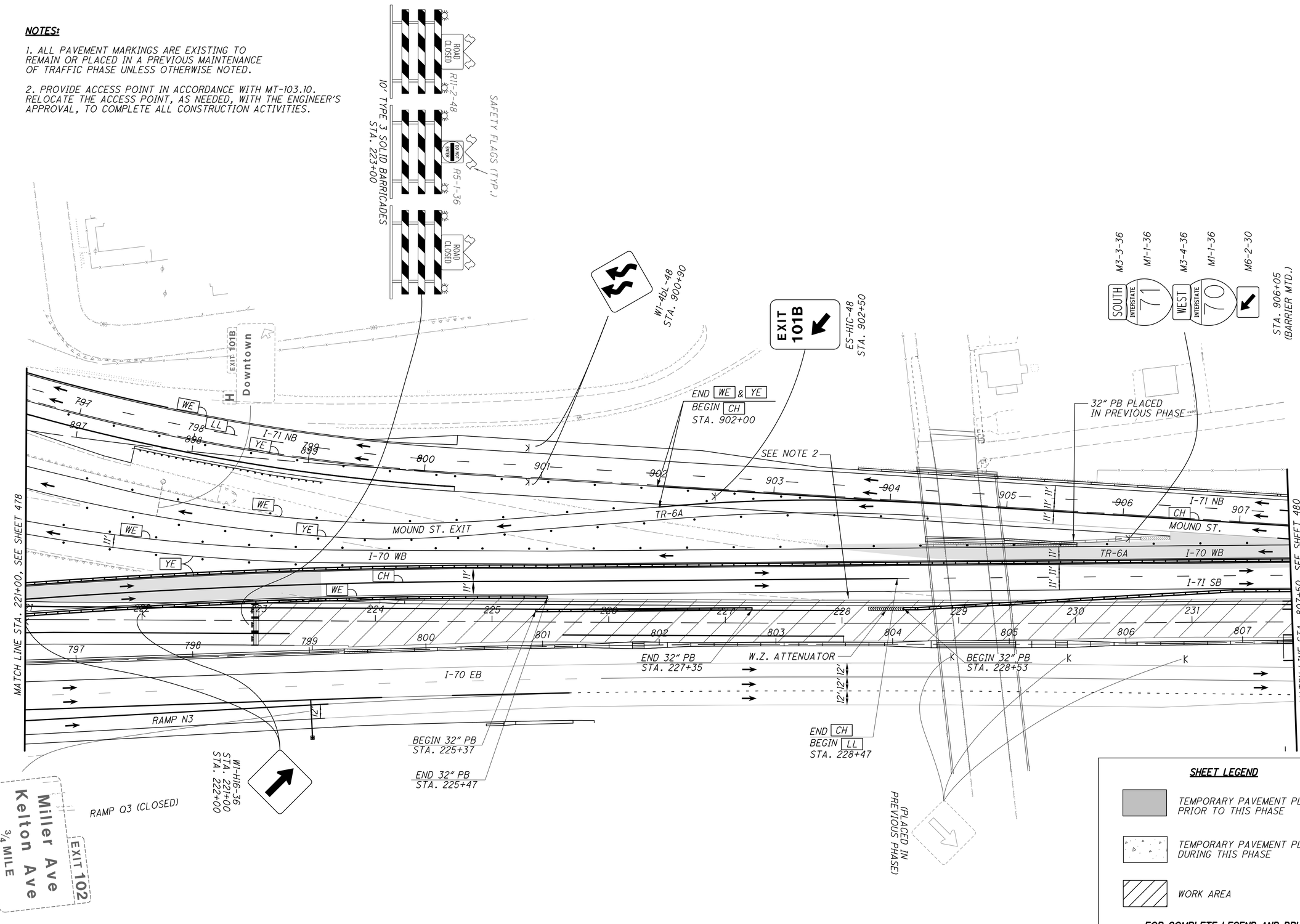

SHEET LEGEND

- TEMPORARY PAVEMENT PLACED PRIOR TO THIS PHASE
- TEMPORARY PAVEMENT PLACED DURING THIS PHASE
- WORK AREA

FOR COMPLETE LEGEND AND DRUM SPACING CHART, SEE SHEET 156

0 20 40 80
HORIZONTAL SCALE IN FEET

CALCULATED JAH
CHECKED JML

MAINTENANCE OF TRAFFIC - PHASE 5-STEP 1
PARTIAL TRANS. I-71 SB CONSTRUCTION

FRA-70-14.54

479
2317

ms consultants, inc.

PLOT.CEL

ms consultants, inc.
msconsultants.com

ms consultants, inc.
www.msconsultants.com

Ohio DOT Workspace
70\71 East Interchange 2E

0 0.5" 1"

Batchplot Spec: \\msconsultants.com\Files\Production\03\60\06634.2E\standards\plotdrv\batchplt.spc
Pen Table: \\msconsultants.com\Files\Standards\ustn\ohdot\V8i\ms\plotting\pen\V8i_ms_std.tbl PDF: ohdot_V8i
Plot Driver: \\msconsultants.com\Files\Standards\ustn\ohdot\v8i\ms\plotting\PDF.pltcfg PCF: 60-06634_2E_Columbus

Model: Sheet View: FENCE_VIEW1
Printed: 9/28/2018 @ 10:30:24 AM By: kryan
File: N:\03\60\06634_2E\mot\sheets\105322MP6012.dgn

34" x 22"

NOTES:

1. ALL PAVEMENT MARKINGS ARE EXISTING TO REMAIN OR PLACED IN A PREVIOUS MAINTENANCE OF TRAFFIC PHASE UNLESS OTHERWISE NOTED.

2. ALL DOWNWARD ARROWS ON OVERHEAD SIGNS SHALL BE PLACED OVER THE CENTER OF THE TRAVEL LANE.

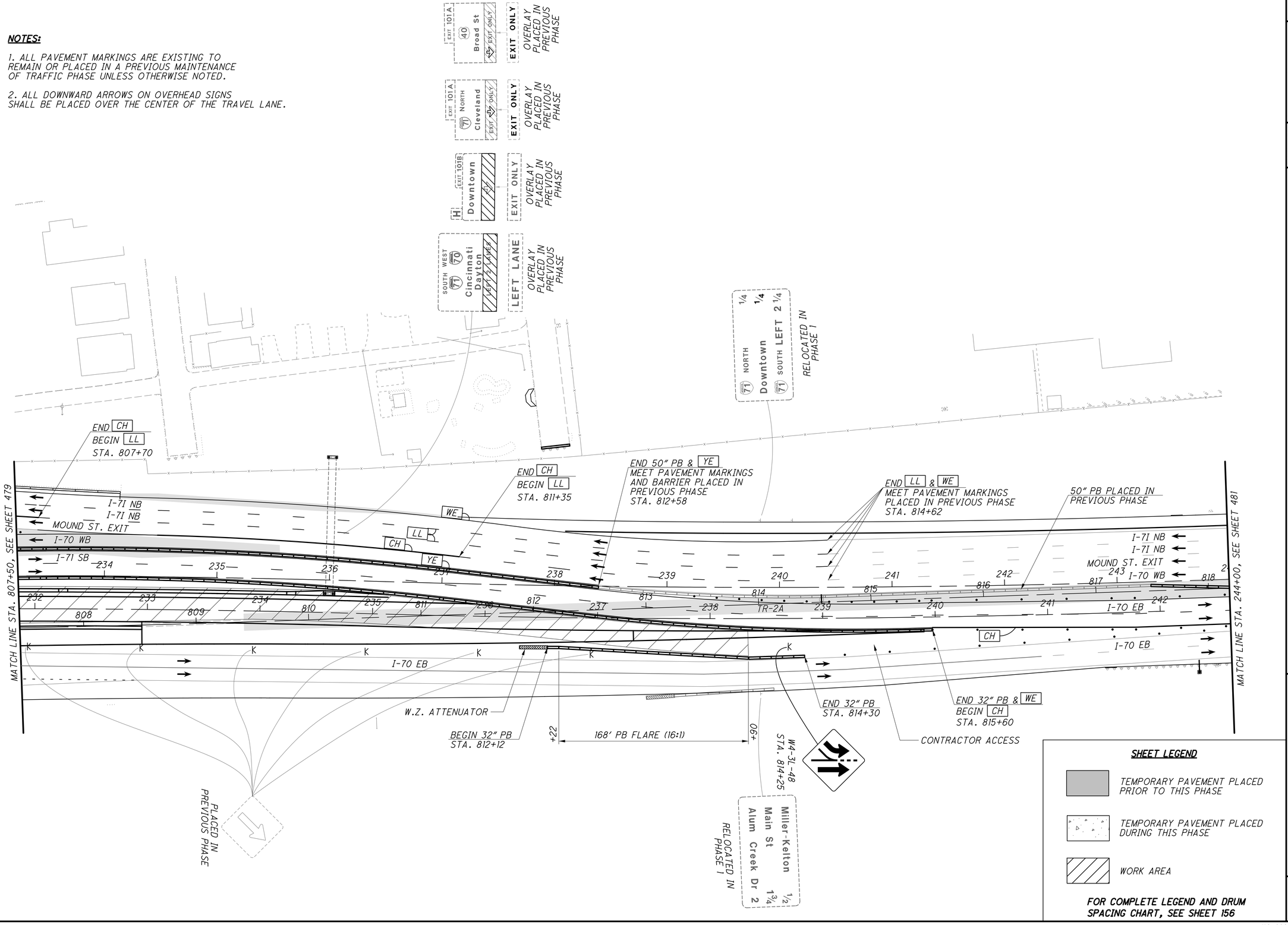

SHEET LEGEND

- TEMPORARY PAVEMENT PLACED PRIOR TO THIS PHASE
- TEMPORARY PAVEMENT PLACED DURING THIS PHASE
- WORK AREA

FOR COMPLETE LEGEND AND DRUM SPACING CHART, SEE SHEET 156

N

0 20 40 80 HORIZONTAL SCALE IN FEET

CALCULATED JAH
CHECKED JML

MAINTENANCE OF TRAFFIC - PHASE 5-STEP 1
PARTIAL TRANS. I-71 SB CONSTRUCTION

FRA-70-14.54

480
2317

PLOT.CEL

ms consultants, inc.
msconsultants.com

www.msconsultants.com

Ohio DOT Workspace
70\71 East Interchange 2E

0 0.5" 1"

Batchplot Spec: \\msconsultants.com\files\production\03\60\06634_2E\standards\plotdrv\batchplt.spc
Pen Table: \\msconsultants.com\files\Standards\usth\ohdot\V8i\ms\plotting\pen\V8i_ms_std.tbl PCF: ohdot\V8i
Plot Driver: \\msconsultants.com\files\Standards\usth\ohdot\v8i\ms\plotting\PDF.pltcfg PCF: 60-06634_2E_Columbus

NOTES:

1. ALL PAVEMENT MARKINGS ARE EXISTING TO REMAIN OR PLACED IN A PREVIOUS MAINTENANCE OF TRAFFIC PHASE UNLESS OTHERWISE NOTED.

2. ALL DOWNWARD ARROWS ON OVERHEAD SIGNS SHALL BE PLACED OVER THE CENTER OF THE TRAVEL LANE.

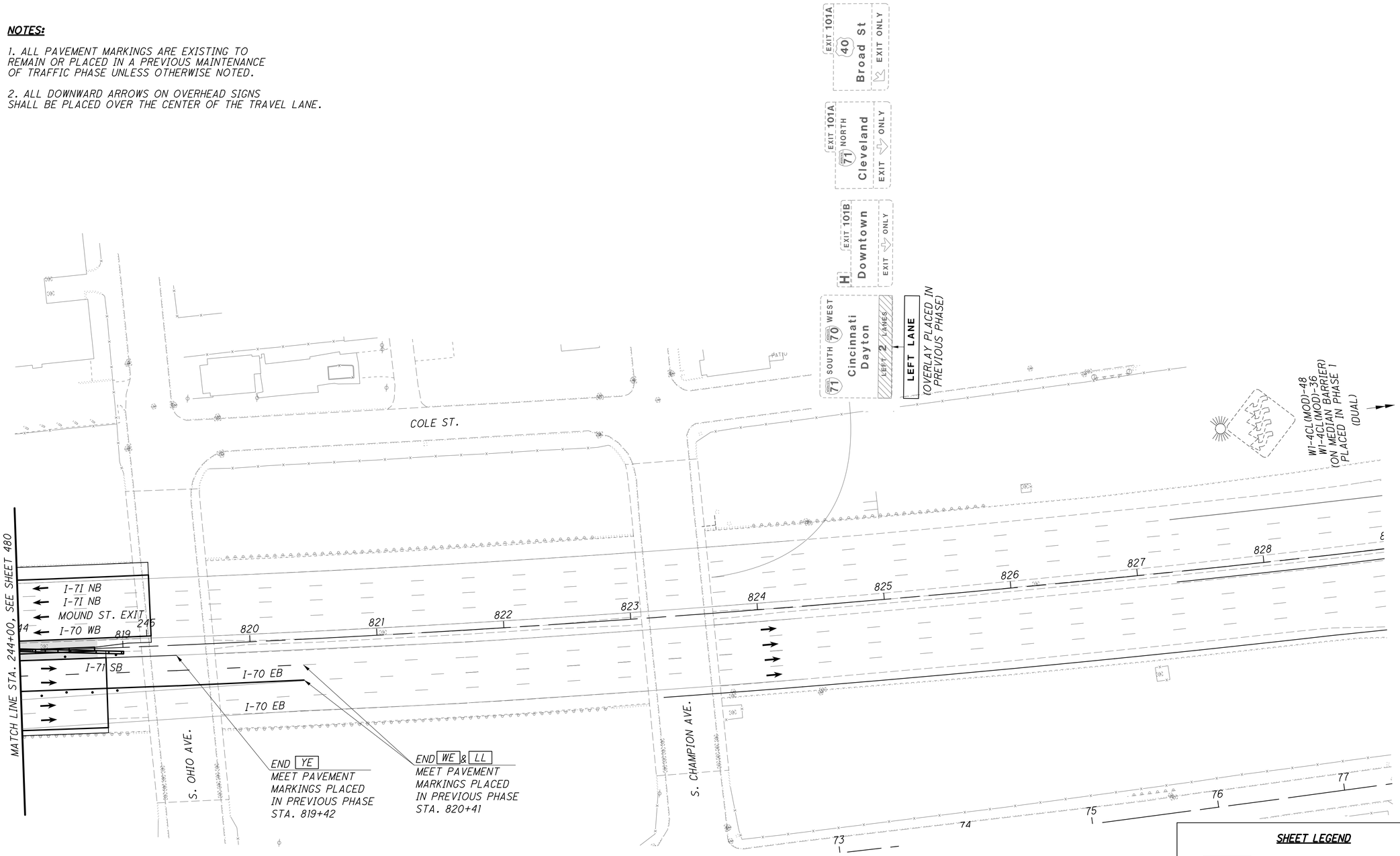

SHEET LEGEND

- TEMPORARY PAVEMENT PLACED PRIOR TO THIS PHASE
- TEMPORARY PAVEMENT PLACED DURING THIS PHASE
- WORK AREA

FOR COMPLETE LEGEND AND DRUM SPACING CHART, SEE SHEET 156

N

0 20 40 80
HORIZONTAL SCALE IN FEET

CALCULATED JAH
CHECKED JML

MAINTENANCE OF TRAFFIC - PHASE 5-STEP 1
PARTIAL TRANS. I-71 SB CONSTRUCTION

FRA-70-14.54

481
2317

34" x 22"

Model: Sheet View: FENCE_VIEW1
Printed: 9/28/2018 @ 10:30:28 AM By: kryan
File: N:\03\60\06634_2E\mot\sheets\105220MP0103.dgn

PLOT.CEL

ms consultants, inc.
msconsultants.com

www.msconsultants.com

Ohio DOT Workspace
70\71 East Interchange 2E

0 0.5" 1"

Batchplot Spec: \\msconsultants.com\files\production\03\60\06634_2E\standards\plotdrv\batchplt.spc
Pen Table: \\msconsultants.com\files\Standards\ustn\ohdot\V8i\ms\plotting\pen\V8i_ms_std.tbl
Plot Driver: \\msconsultants.com\files\Standards\ustn\ohdot\v8i\ms\plotting\PDF.pltcfg

PDF: ohdotV8i
PDF: 60-06634_2E_Columbus

34" x 22"

View: FENCE_VIEW1
By: kryan

Model: Sheet
Printed: 9/28/2018 @ 10:30:32 AM
File: N:\03\60\06634_2E\mot\sheets\05322MP6020.dgn

NOTES:

1. ALL PAVEMENT MARKINGS ARE EXISTING TO REMAIN OR PLACED IN A PREVIOUS MAINTENANCE OF TRAFFIC PHASE UNLESS OTHERWISE NOTED.

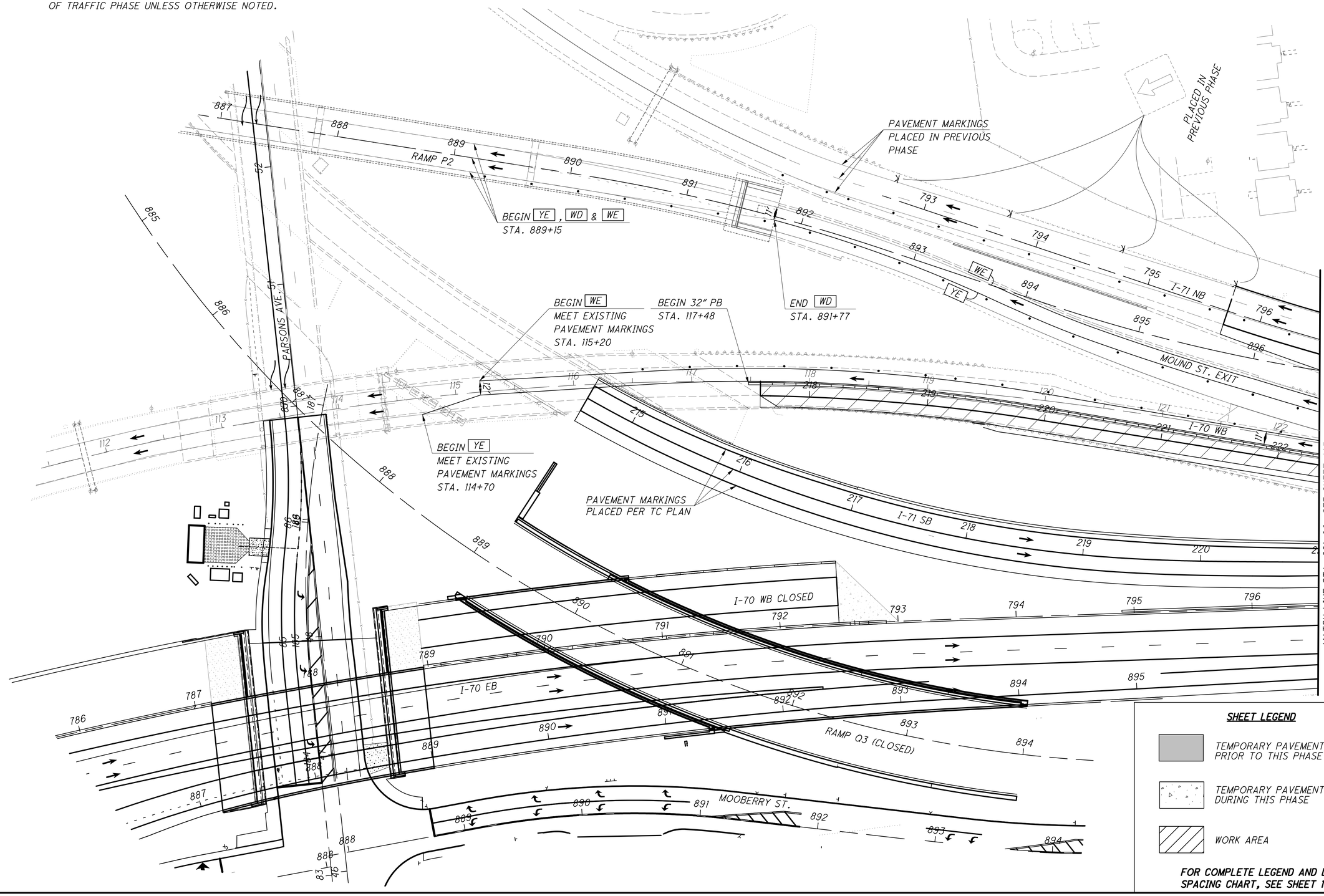

SHEET LEGEND

- TEMPORARY PAVEMENT PLACED PRIOR TO THIS PHASE
- TEMPORARY PAVEMENT PLACED DURING THIS PHASE
- WORK AREA

FOR COMPLETE LEGEND AND DRUM SPACING CHART, SEE SHEET 156

N

0 20 40 80
HORIZONTAL SCALE IN FEET

CALCULATED JAH
CHECKED JML

MAINTENANCE OF TRAFFIC - PHASE 5-STEP 2
PARTIAL TRANS. I-71 SB CONSTRUCTION

FRA-70-14.54

482
2317

PLOT.CEL

ms consultants, inc.
msconsultants.com

Ohio DOT Workspace
70\71 East Interchange 2E

www.msconsultants.com

0 0.5" 1"

Batchplot Spec: \\msconsultants.com\files\production\03\60\06634_2E\standards\ohdot\batchplt.spc
Pen Table: \\msconsultants.com\files\Standards\usitn\ohdot\V8i\ms\plotting\pen\V8i_ms_std.tbl PCF: ohdot\V8i
Plot Driver: \\msconsultants.com\files\Standards\usitn\ohdot\v8i\ms\plotting\PDF.pltcfg PCF: 60-06634_2E_Columbus

Model: Sheet View: FENCE_VIEW1
Printed: 9/28/2018 @ 10:30:36 AM By: kryan
File: N:\03\60\06634_2E\mot\sheets\105322MP8021.dgn

34" x 22"

NOTES:

1. ALL PAVEMENT MARKINGS ARE EXISTING TO REMAIN OR PLACED IN A PREVIOUS MAINTENANCE OF TRAFFIC PHASE UNLESS OTHERWISE NOTED.

2. PROVIDE ACCESS POINT IN ACCORDANCE WITH MT-103.10. RELOCATE THE ACCESS POINT, AS NEEDED, WITH THE ENGINEER'S APPROVAL, TO COMPLETE ALL CONSTRUCTION ACTIVITIES.

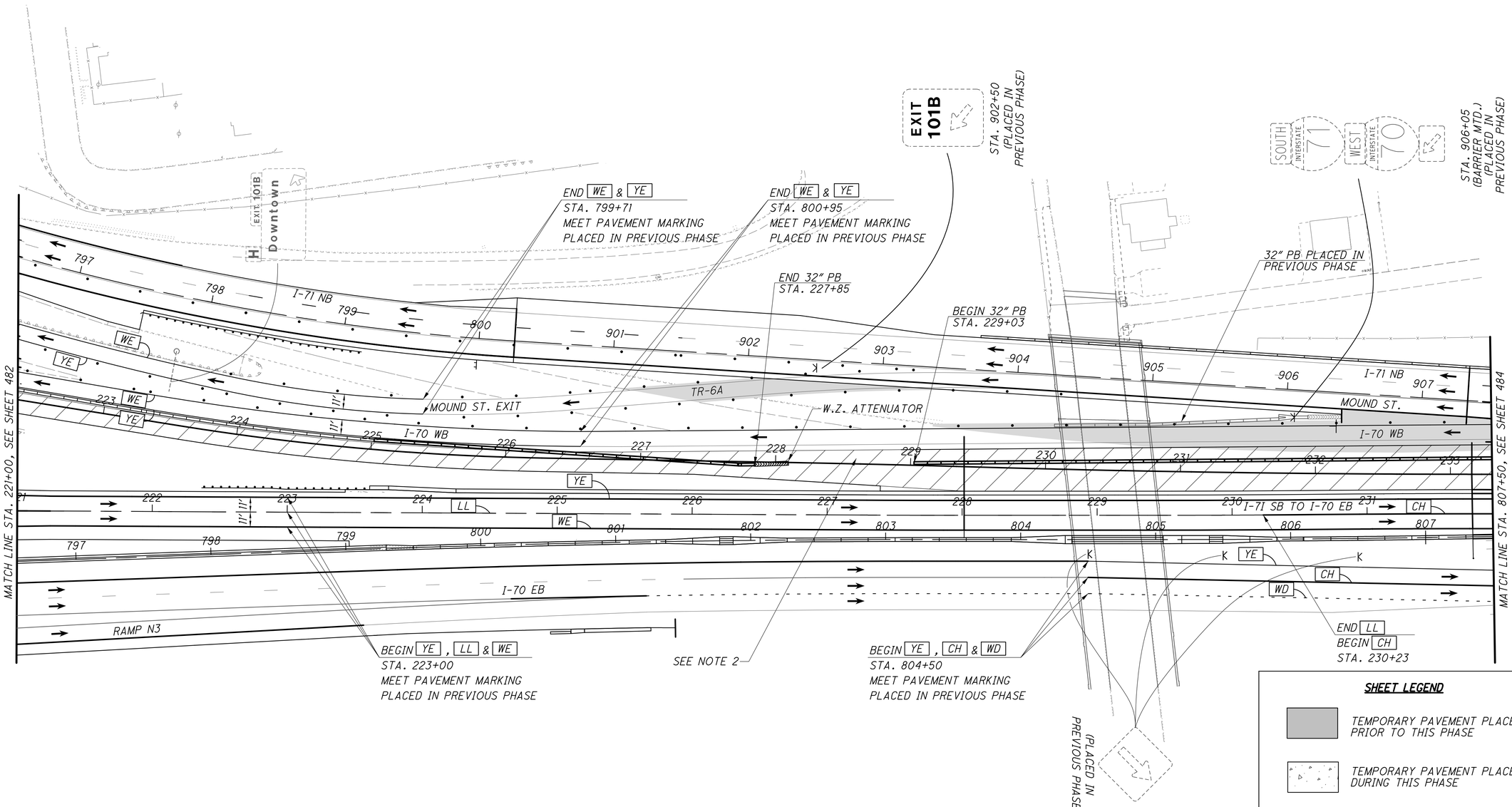

SHEET LEGEND

- TEMPORARY PAVEMENT PLACED PRIOR TO THIS PHASE
- TEMPORARY PAVEMENT PLACED DURING THIS PHASE
- WORK AREA

FOR COMPLETE LEGEND AND DRUM SPACING CHART, SEE SHEET 156

HORIZONTAL SCALE IN FEET
0 20 40 80

CALCULATED JAH
CHECKED JML

MAINTENANCE OF TRAFFIC - PHASE 5-STEP 2
PARTIAL TRANS. I-71 SB CONSTRUCTION

FRA-70-14.54

PLOT.CEL

ms consultants, inc.
msconsultants.com

www.msconsultants.com

Ohio DOT Workspace
70\71 East Interchange 2E

0 0.5" 1"

34" x 22"

Batchplot Spec: \\msconsultants.com\files\production\Q3\60\06634_2E\standards\plotdr\batchplt.spc
Pen Table: \\msconsultants.com\files\Standards\ustn\ohdot\V8i\ms\plotting\pen\V8i_ms_std.tbl PCF: ohdotV8i
Plot Driver: \\msconsultants.com\files\Standards\ustn\ohdot\v8i\ms\plotting\PDF.pltcfg PCF: 60-06634_2E_Columbus

Model: Sheet View: FENCE_VIEW1
Printed: 9/28/2018 @ 10:30:40 AM By: kryan
File: N:\03\60\06634_2E\mot sheets\105322MP6022.dgn

NOTES:

1. ALL PAVEMENT MARKINGS ARE EXISTING TO REMAIN OR PLACED IN A PREVIOUS MAINTENANCE OF TRAFFIC PHASE UNLESS OTHERWISE NOTED.

2. ALL DOWNWARD ARROWS ON OVERHEAD SIGNS SHALL BE PLACED OVER THE CENTER OF THE TRAVEL LANE.

3. PROVIDE ACCESS POINT IN ACCORDANCE WITH MT-103.10. RELOCATE THE ACCESS POINT, AS NEEDED, WITH THE ENGINEER'S APPROVAL, TO COMPLETE ALL CONSTRUCTION ACTIVITIES.

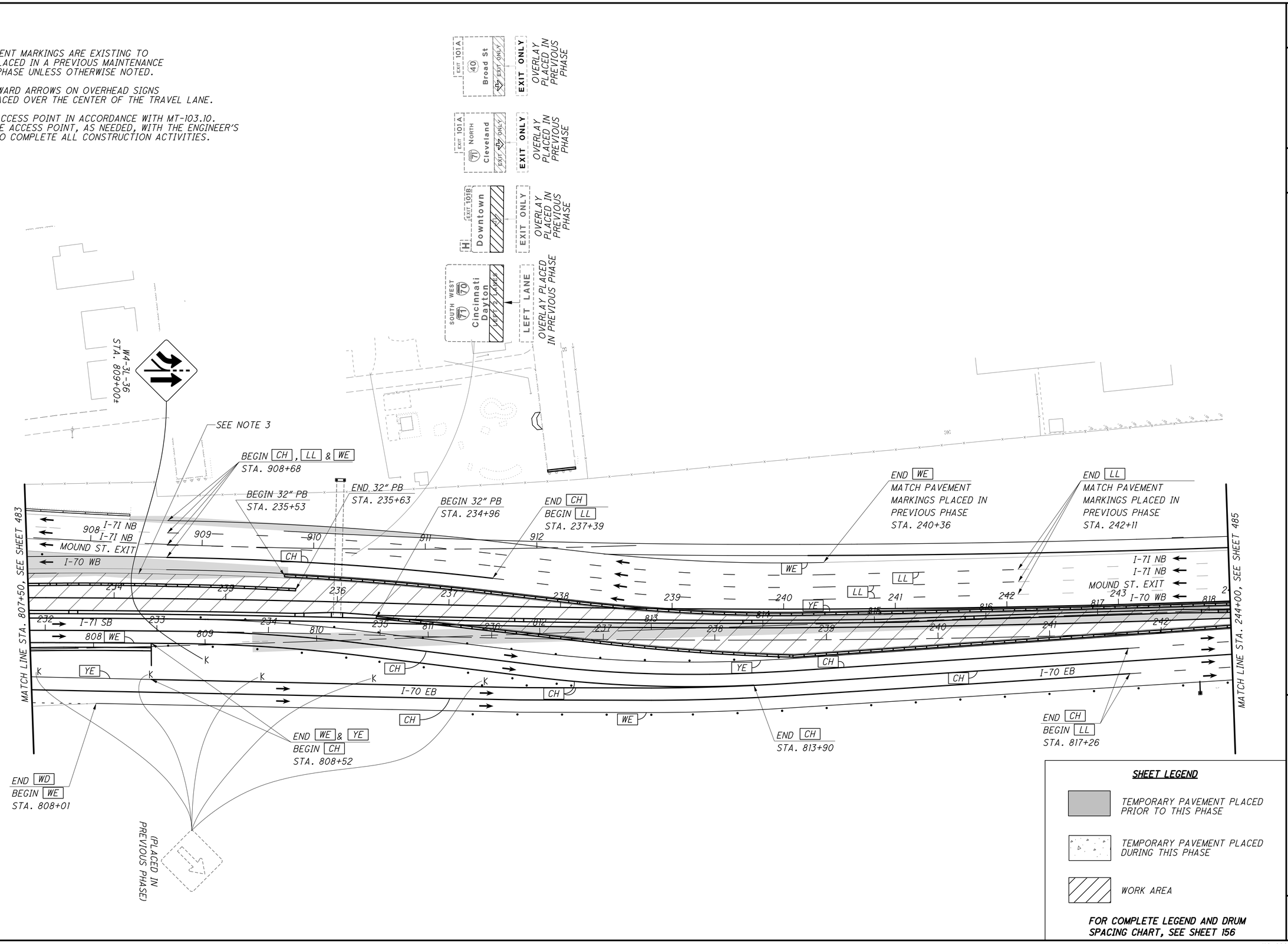

SHEET LEGEND

TEMPORARY PAVEMENT PLACED PRIOR TO THIS PHASE

TEMPORARY PAVEMENT PLACED DURING THIS PHASE

WORK AREA

FOR COMPLETE LEGEND AND DRUM SPACING CHART, SEE SHEET 156

0 20 40 80
HORIZONTAL SCALE IN FEET

CALCULATED JAH
CHECKED JML

MAINTENANCE OF TRAFFIC - PHASE 5-STEP 2
PARTIAL TRANS. I-71 SB CONSTRUCTION

FRA-70-14.54

484
2317

ms consultants, inc.

NOTES:

1. ALL PAVEMENT MARKINGS ARE EXISTING TO REMAIN OR PLACED IN A PREVIOUS MAINTENANCE OF TRAFFIC PHASE UNLESS OTHERWISE NOTED.

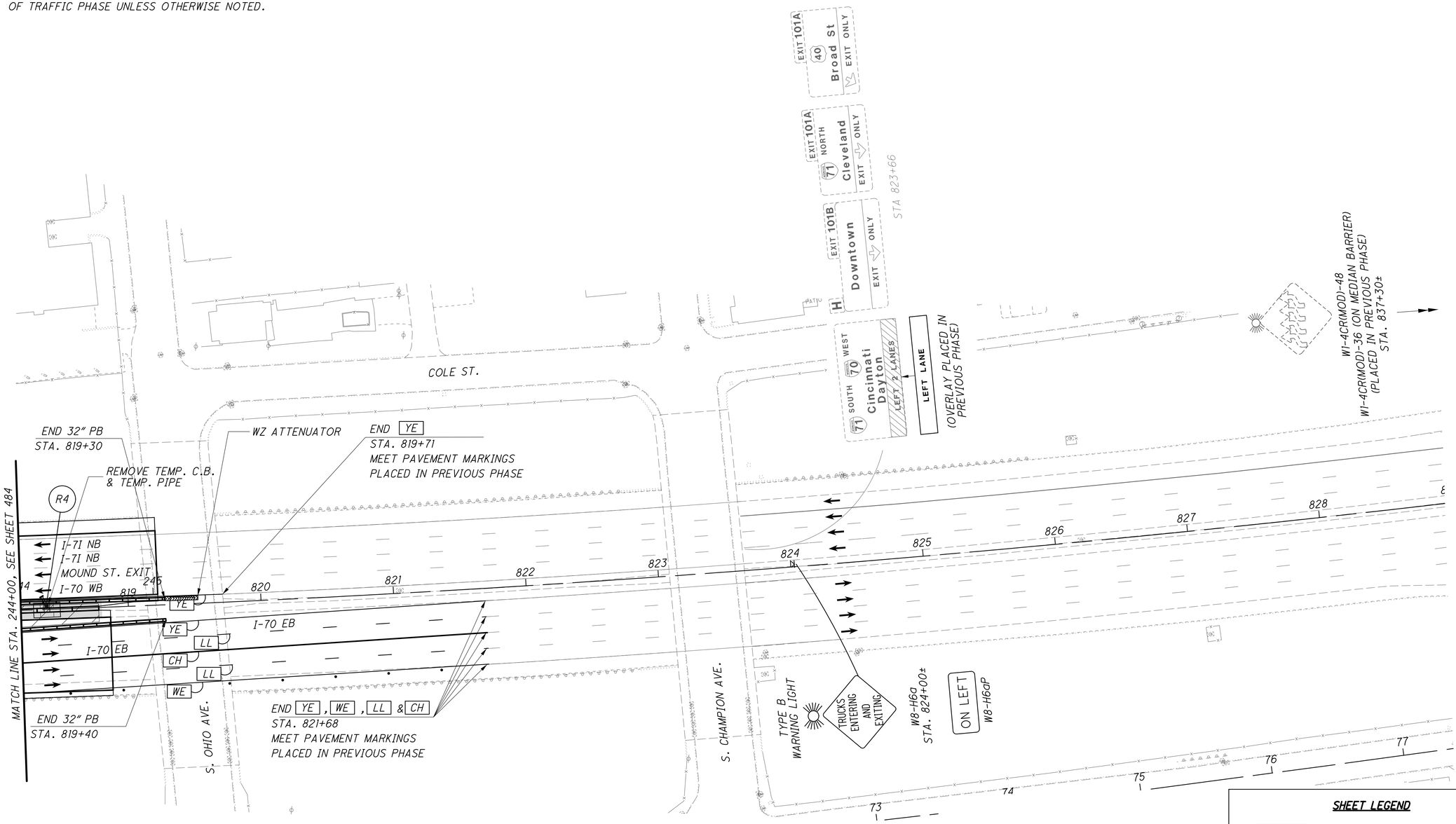

SHEET LEGEND

TEMPORARY PAVEMENT PLACED PRIOR TO THIS PHASE

TEMPORARY PAVEMENT PLACED DURING THIS PHASE

WORK AREA

FOR COMPLETE LEGEND AND DRUM SPACING CHART, SEE SHEET 156

0 20 40 80
HORIZONTAL SCALE IN FEET

CALCULATED JAH
CHECKED JML

MAINTENANCE OF TRAFFIC - PHASE 5-STEP 2
PARTIAL TRANS. I-71 SB CONSTRUCTION

FRA-70-14.54

ms consultants, inc.

PLOT.CEL
ms consultants, inc.
msconsultants.com
Ohio DOT Workspace
70\71 East Interchange 2E
www.msconsultants.com
Batchplot Spec: \\msconsultants.com\files\production\03\60\06634_2E\standards\plotdrv\batchplt.spc
Pen Table: N:\03\60\06634_2E\standards\tables\V8i_ms_std_NoClouds.tbl
Plot Driver: \\msconsultants.com\files\Standards\ustn\ohdot\v8i\ms\plotting\PDF.pltcfg
0 0.5" 1"
34" x 22"
Model: Sheet
Printed: 2/12/2019 @ 9:59:52 AM
File: N:\03\60\06634_2E\mot\sheets\105322MP6023.dgn
View: FENCE_VIEW1
By: awhite

PLOT.CEL

ms consultants, inc.
msconsultants.com

www.msconsultants.com

Ohio DOT Workspace
70\71 East Interchange 2E

0 1" 0.5"

Batchplot Spec: \\msconsultants.com\files\production\03\60\06634_2E\standards\plotdrv\batchplt.spc
Pen Table: \\msconsultants.com\files\Standards\usth\ohdot\V8i\ms\plotting\pen\V8i_ms_std.tbl
Plot Driver: \\msconsultants.com\files\Standards\usth\ohdot\v8i\ms\plotting\PDF.pltcfg
PDF: ohdotV8i
DGN: 60-06634_2E_Columbus

34" x 22"

Model: Sheet
Printed: 9/28/2018 @ 10:30:53 AM
File: N:\03\60\06634_2E\mot\sheets\05322MP60J0.dgn
View: FENCE_VIEW1
By: kryan

NOTES:

1. ALL PAVEMENT MARKINGS ARE EXISTING TO REMAIN OR PLACED IN A PREVIOUS MAINTENANCE OF TRAFFIC PHASE UNLESS OTHERWISE NOTED.

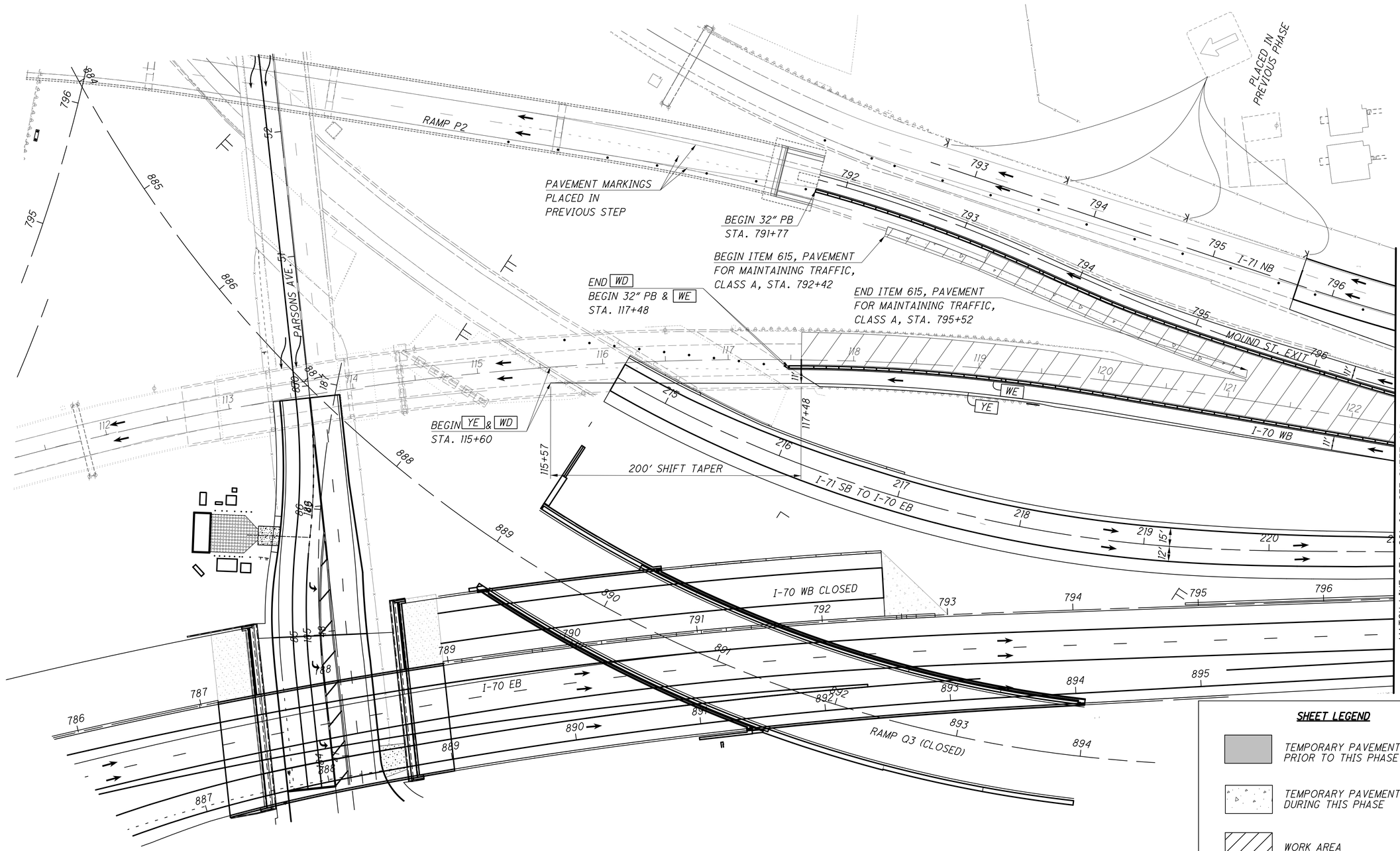

SHEET LEGEND

- TEMPORARY PAVEMENT PLACED PRIOR TO THIS PHASE
- TEMPORARY PAVEMENT PLACED DURING THIS PHASE
- WORK AREA

FOR COMPLETE LEGEND AND DRUM SPACING CHART, SEE SHEET 156

HORIZONTAL SCALE IN FEET
0 20 40 80

CALCULATED JAH
CHECKED JML

MAINTENANCE OF TRAFFIC - PHASE 5-STEP 3
PARTIAL TR. I-70 WB & MOUND ST. CONSTR.

FRA-70-14.54

ms consultants, inc.

PLOT.CEL

ms consultants, inc.
msconsultants.com

www.msconsultants.com

Ohio DOT Workspace
70\71 East Interchange 2E

PCF: 60-06634_2E_Columbus
CTB: ohdot\V8i

Batchplot Spec: \\msconsultants.com\files\production\03\60\06634_2E\standards\plotdrv\batchplt.sdc
Pen Table: N:\03\60\06634_2E\standards\tables\V8i_ms_std_NoClouds.tbl
Plot Driver: \\msconsultants.com\files\Standards\usitn\ohdot\v8i\ms\plotting\PDF.pltcfg

Model: Sheet
Printed: 2/12/2019 @ 9:59:55 AM
File: N:\03\60\06634_2E\mot\sheets\105322MP6031.dgn

View: FENCE_VIEW1
By: awhite

34" x 22"

NOTES:

1. ALL PAVEMENT MARKINGS ARE EXISTING TO REMAIN OR PLACED IN A PREVIOUS MAINTENANCE OF TRAFFIC PHASE UNLESS OTHERWISE NOTED.

2. PROVIDE ACCESS POINT IN ACCORDANCE WITH MT-103.10. RELOCATE THE ACCESS POINT, AS NEEDED, WITH THE ENGINEER'S APPROVAL, TO COMPLETE ALL CONSTRUCTION ACTIVITIES.

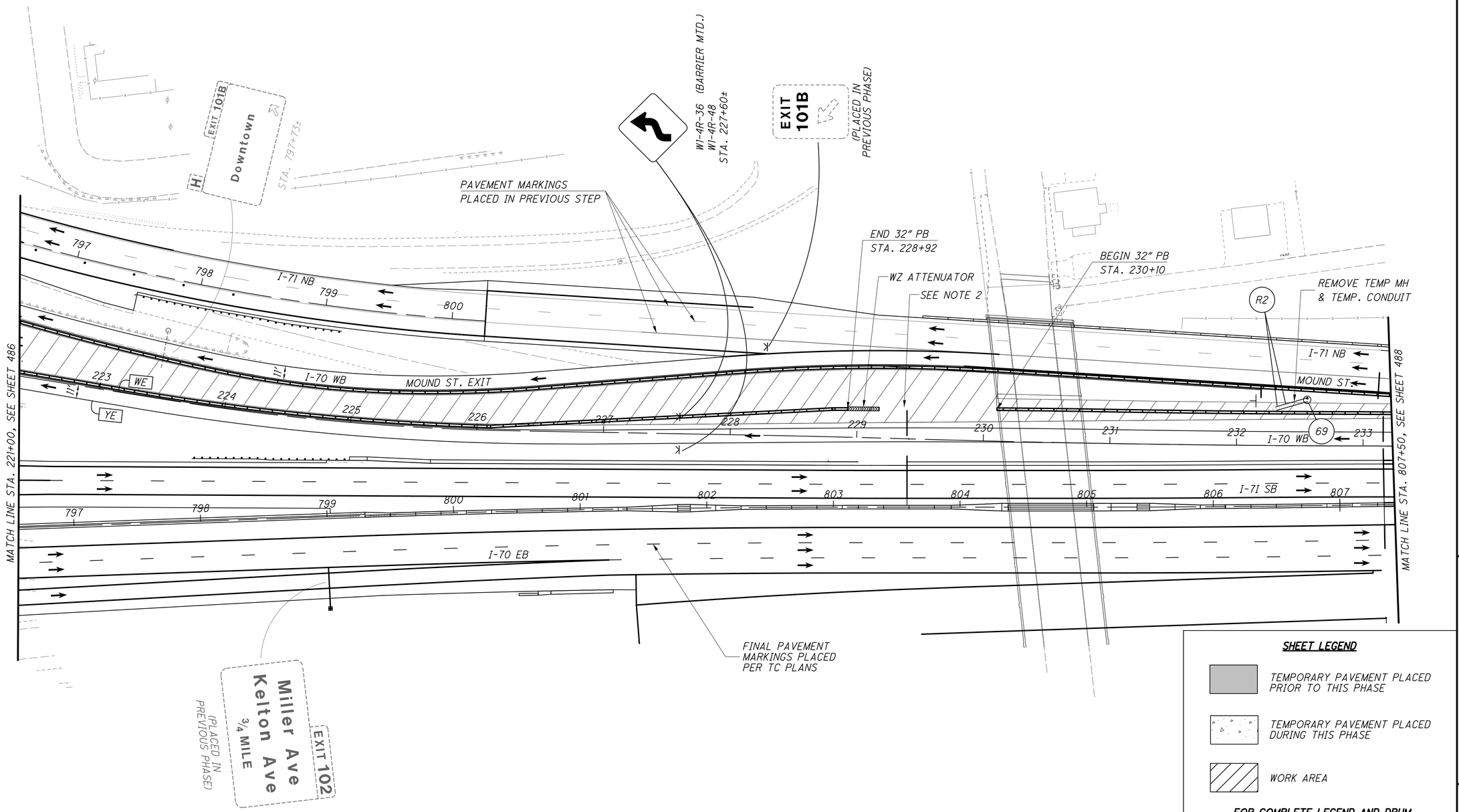

SHEET LEGEND

- TEMPORARY PAVEMENT PLACED PRIOR TO THIS PHASE
- TEMPORARY PAVEMENT PLACED DURING THIS PHASE
- WORK AREA

FOR COMPLETE LEGEND AND DRUM SPACING CHART, SEE SHEET 156

N

0 20 40 80
HORIZONTAL SCALE IN FEET

CALCULATED JAH
CHECKED JML

MAINTENANCE OF TRAFFIC - PHASE 5-STEP 3
PARTIAL TR. 1-70 WB MOUND ST. CONSTR.

FRA-70-14.54

ms consultants, inc.

PLOT.CEL

ms consultants, inc.
rmsconsultants.com

Batchplot Spec: \\rmsconsultants.com\files\production\Q3\60\06634_2E\standards\plotdr\batchplt.spc
Pen Table: \\rmsconsultants.com\files\Standards\usth\ohdot\V8i\ms\plotting\pen\V8i_ms_std.tbl
Plot Driver: \\rmsconsultants.com\files\Standards\usth\ohdot\v8i\ms\plotting\PDF.pltcfg
PCF: ohdotV8i
PCF: 60-06634_2E_Columbus

Ohio DOT Workspace
70\71 East Interchange 2E

www.rmsconsultants.com

0 1" 0.5"

34" x 22"

Model: Sheet View: FENCE_VIEW1
Printed: 9/28/2018 @ 10:31:01 AM By: kryan
File: N:\03\60\06634_2E\mot sheets\105322MP6032.dgn

NOTES:

1. ALL PAVEMENT MARKINGS ARE EXISTING TO REMAIN OR PLACED IN A PREVIOUS MAINTENANCE OF TRAFFIC PHASE UNLESS OTHERWISE NOTED.

2. PROVIDE ACCESS POINT IN ACCORDANCE WITH MT-103.10. RELOCATE THE ACCESS POINT, AS NEEDED, WITH THE ENGINEER'S APPROVAL, TO COMPLETE ALL CONSTRUCTION ACTIVITIES.

3. ALL DOWNWARD ARROWS ON OVERHEAD SIGNS SHALL BE PLACED OVER THE CENTER OF THE TRAVEL LANE.

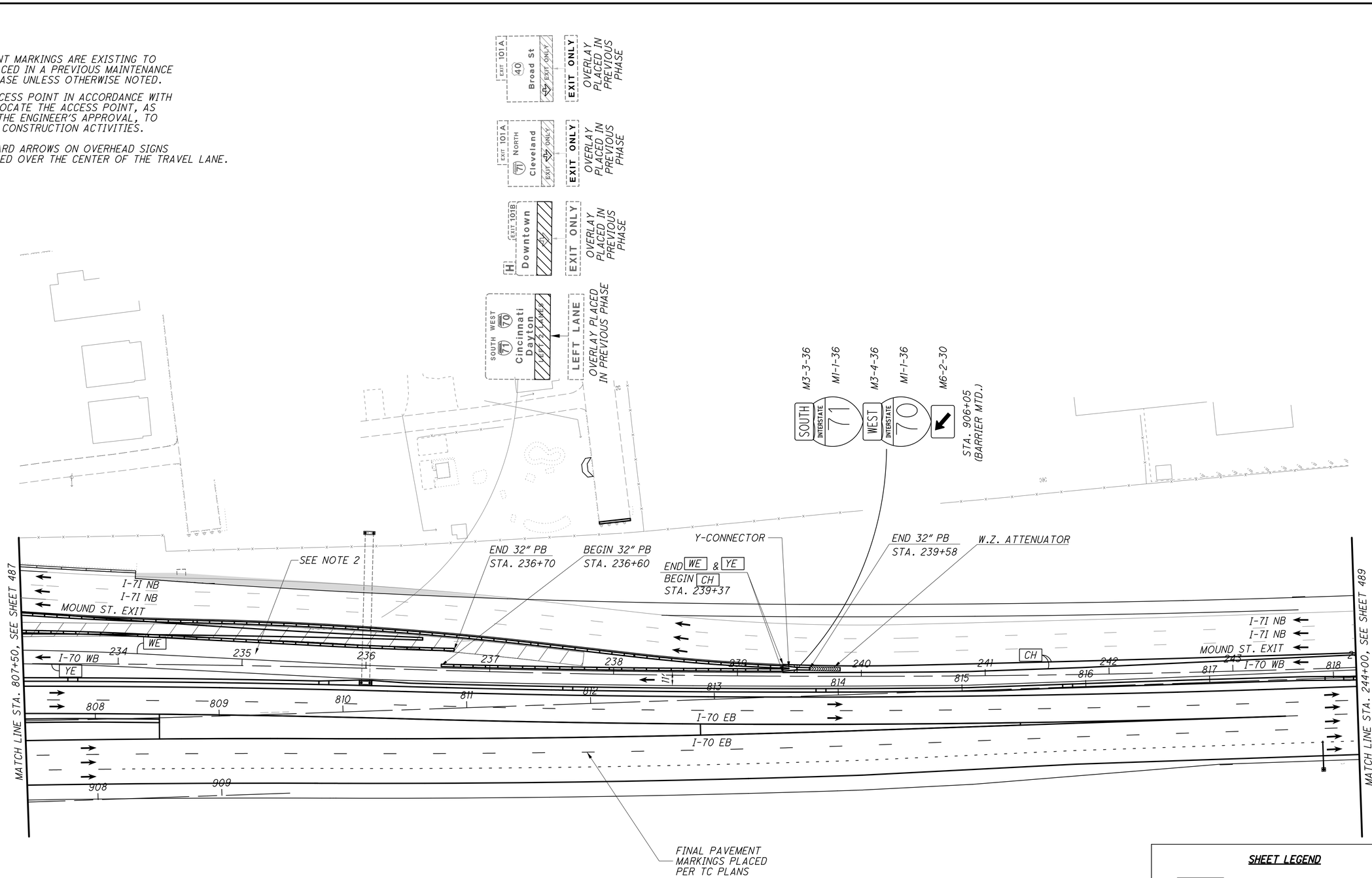

SHEET LEGEND

- TEMPORARY PAVEMENT PLACED PRIOR TO THIS PHASE
- TEMPORARY PAVEMENT PLACED DURING THIS PHASE
- WORK AREA

FOR COMPLETE LEGEND AND DRUM SPACING CHART, SEE SHEET 156

N

0 20 40 80
HORIZONTAL SCALE IN FEET

CALCULATED JAH
CHECKED JML

MAINTENANCE OF TRAFFIC - PHASE 5-STEP 3
PARTIAL TR. I-70 WB CONSTR.

FRA-70-14.54

488
2317

ms consultants, inc.

PLOT.CEL

ms consultants, inc.
msconsultants.com

Ohio DOT Workspace
70\71 East Interchange 2E

www.msconsultants.com

Batchplot Spec: \\msconsultants.com\files\production\03\60\06634_2E\standards\plotdrv\batchplt.spc
Pen Table: \\msconsultants.com\files\Standards\usth\ohdot\V8i\ms\plotting\pen\V8i_ms_std.tbl
Plot Driver: \\msconsultants.com\files\Standards\usth\ohdot\v8i\ms\plotting\PDF.pltcfg

PDF: ohdot\V8i
DGN: 60-06634_2E_Columbus

0 1" 0.5"

34" x 22"

View: FENCE_VIEW1
By: kryan

Model: Sheet @ 10:31:05 AM
Printed: 9/28/2018
File: N:\03\60\06634_2E\mot\sheets\105322MP6033.dgn

NOTES:

1. ALL PAVEMENT MARKINGS ARE EXISTING TO REMAIN OR PLACED IN A PREVIOUS MAINTENANCE OF TRAFFIC PHASE UNLESS OTHERWISE NOTED.

2. ALL DOWNWARD ARROWS ON OVERHEAD SIGNS SHALL BE PLACED OVER THE CENTER OF THE TRAVEL LANE.

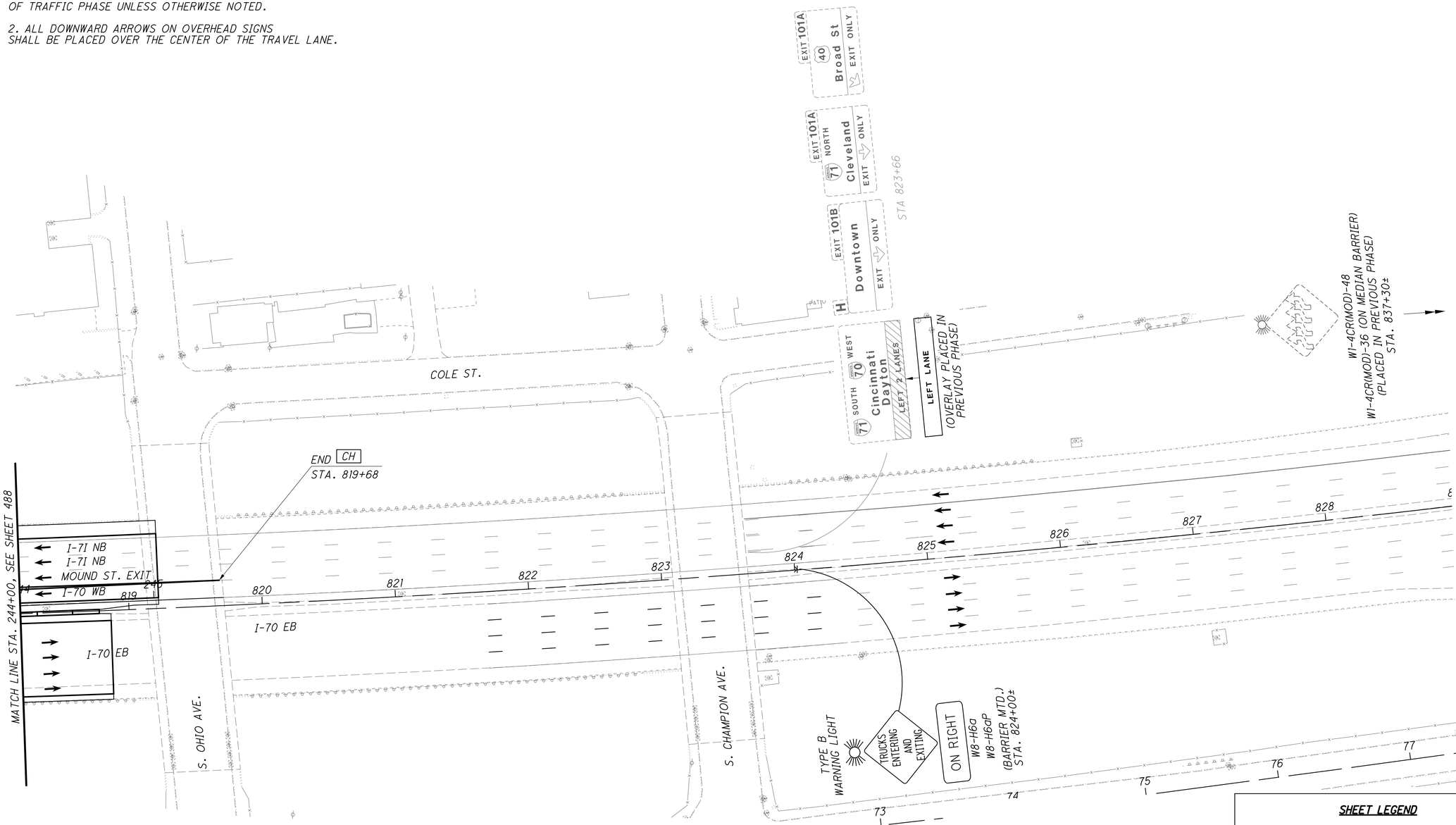

SHEET LEGEND

TEMPORARY PAVEMENT PLACED PRIOR TO THIS PHASE

TEMPORARY PAVEMENT PLACED DURING THIS PHASE

WORK AREA

FOR COMPLETE LEGEND AND DRUM SPACING CHART, SEE SHEET 156

N

0 20 40 80
HORIZONTAL SCALE IN FEET

CALCULATED JAH
CHECKED JML

MAINTENANCE OF TRAFFIC - PHASE 5-STEP 3
PARTIAL TR. I-70 WB & MOUND ST. CONSTR.

FRA-70-14.54

489
2317

PLOT.CEL

ms consultants, inc.
msconsultants.com

Ohio DOT Workspace
70\71 East Interchange 2E
www.msconsultants.com

Batchplot Spec: \\msconsultants.com\files\production\03\60\06634_2E\standards\plotdrv\batchplt.spc
Pen Table: \\msconsultants.com\files\Standards\ustn\ohdot\V8i\ms\plotting\pen\V8i_ms_std.tbl
Plot Driver: \\msconsultants.com\files\Standards\ustn\ohdot\v8i\ms\plotting\PDF.pltcfg

34" x 22"

Model: Sheet
Printed: 9/28/2018 @ 10:31:12 AM
File: N:\03\60\06634_2E\mot\sheets\105322MP6040.dgn
View: FENCE_VIEW1
By: kryan

NOTES:

1. ALL PAVEMENT MARKINGS ARE EXISTING TO REMAIN OR PLACED IN A PREVIOUS MAINTENANCE OF TRAFFIC PHASE UNLESS OTHERWISE NOTED.

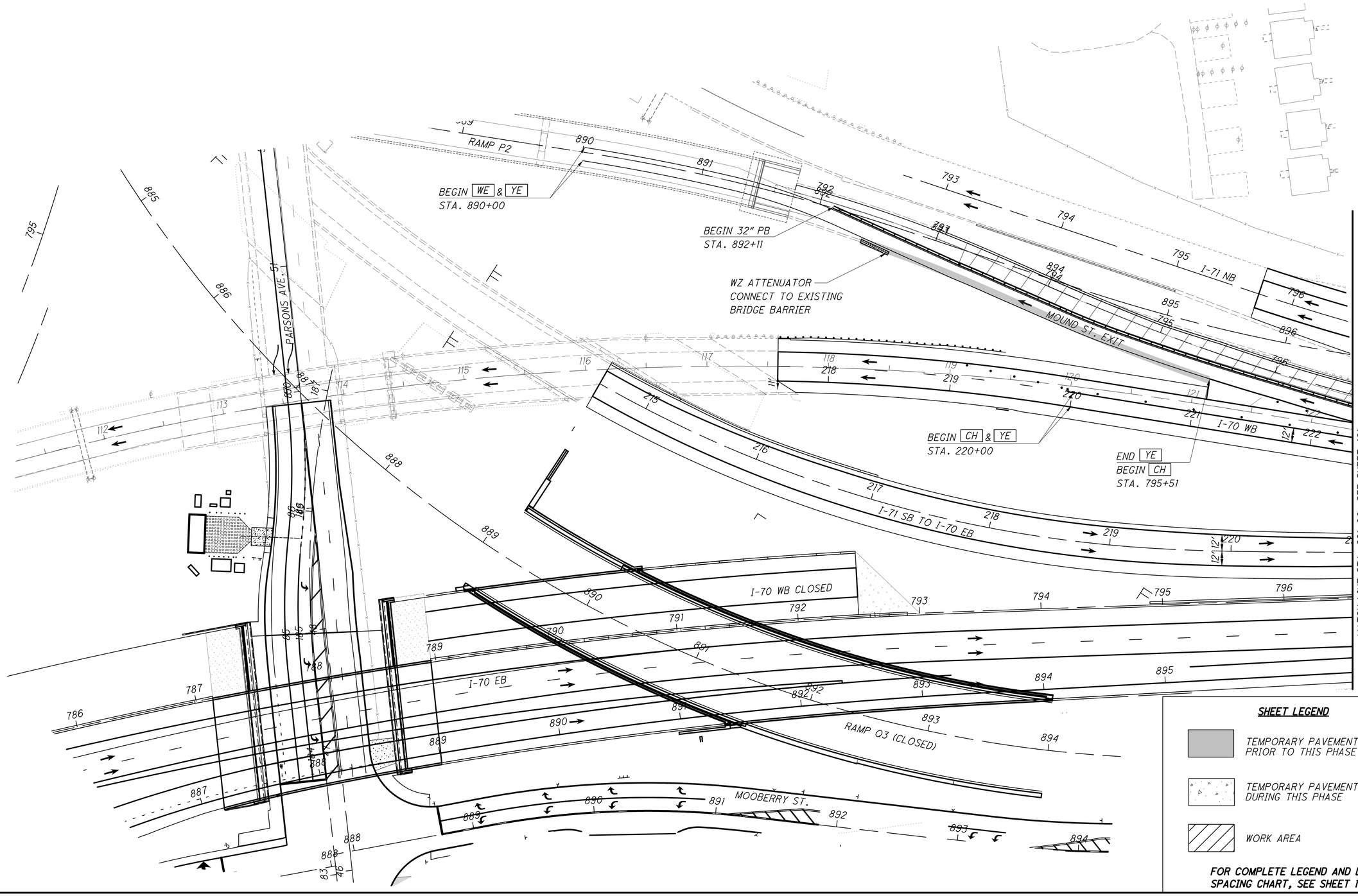

SHEET LEGEND

TEMPORARY PAVEMENT PLACED PRIOR TO THIS PHASE

TEMPORARY PAVEMENT PLACED DURING THIS PHASE

WORK AREA

FOR COMPLETE LEGEND AND DRUM SPACING CHART, SEE SHEET 156

0 20 40 80
HORIZONTAL SCALE IN FEET

CALCULATED JAH
CHECKED JML

MAINTENANCE OF TRAFFIC - PHASE 5-STEP 4
PARTIAL MOUND ST. RAMP CONSTR.

FRA-70-14.54

ms consultants, inc.

PLOT.CEL

ms consultants, inc.
msconsultants.com

www.msconsultants.com

Ohio DOT Workspace
70\71 East Interchange 2E

0 0.5" 1"

Batchplot Spec: \\msconsultants.com\files\production\03\60\06634.2E\standards\plotdrv\batchplt.spc
Pen Table: \\msconsultants.com\files\Standards\usth\ohdot\V8i\ms\plotting\pen\V8i_ms_std.tbl
Plot Driver: \\msconsultants.com\files\Standards\usth\ohdot\V8i\ms\plotting\PDF.pltcfg
PDF: ohdotV8i
PCF: 60-06634_2E_Columbus

Model: Sheet
Printed: 9/28/2018 @ 10:31:16 AM
File: N:\03\60\06634.2E\mot\sheets\105322MP8041.dgn
View: FENCE_VIEW1
By: kryan

34" x 22"

NOTES:

1. ALL PAVEMENT MARKINGS ARE EXISTING TO REMAIN OR PLACED IN A PREVIOUS MAINTENANCE OF TRAFFIC PHASE UNLESS OTHERWISE NOTED.

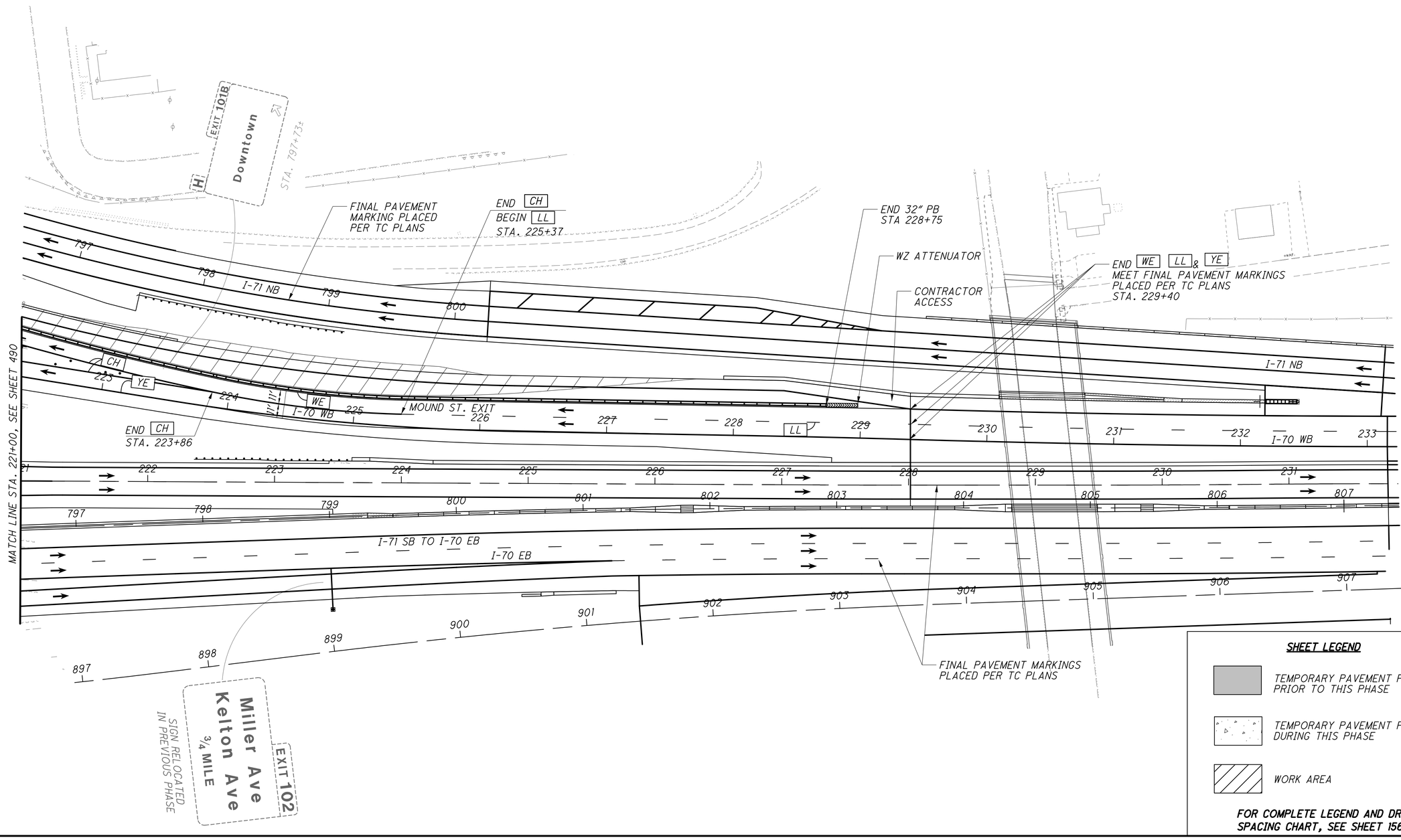

SHEET LEGEND

- TEMPORARY PAVEMENT PLACED PRIOR TO THIS PHASE
- TEMPORARY PAVEMENT PLACED DURING THIS PHASE
- WORK AREA

FOR COMPLETE LEGEND AND DRUM SPACING CHART, SEE SHEET 156

0 20 40 80 HORIZONTAL SCALE IN FEET

CALCULATED JAH
CHECKED JML

MAINTENANCE OF TRAFFIC - PHASE 5-STEP 4
PARTIAL MOUND ST. RAMP CONSTR.

FRA-70-14.54

491
2317

SHEET NUM.											PART.					ITEM	ITEM EXT	GRAND TOTAL	UNIT	DESCRIPTION	SEE SHEET NO.
80	83	124	534	535	536	537	538	539	OFFICE	125	01/IMS/PV	02/NHS/PV	06/IMS/OT	07/MPO/OT	08/IMS/OT/COL						
																				ROADWAY	
											LUMP					201	11000	LS		CLEARING AND GRUBBING	
			LUMP								LUMP					202	11000	LS		STRUCTURE REMOVED	
			LUMP								LUMP					202	11000	LS		STRUCTURE REMOVED	
			397								218	179				202	11100	397	CY	STRUCTURE REMOVED	
											LUMP					202	11201	LS		PORTIONS OF STRUCTURE REMOVED, AS PER PLAN	81
			26,411	10,000							20,026	16,385				202	23000	36,411	SY	PAVEMENT REMOVED	
			10,185	12,867							12,679	10,373				202	30000	23,052	SF	WALK REMOVED	
			74	259							183	150				202	30600	333	SY	CONCRETE MEDIAN REMOVED	
			5,963	1,715							4,223	3,455				202	30700	7,678	FT	CONCRETE BARRIER REMOVED	
			200								110	90				202	30704	200	FT	CONCRETE BARRIER REMOVED FOR STORAGE	
			20,713	6,078							14,735	12,056				202	32000	26,791	FT	CURB REMOVED	
				747							411	336				202	32300	747	FT	GRANITE CURB REMOVED FOR REUSE	
			161	3							90	74				202	32800	164	SY	CONCRETE SLOPE PROTECTION REMOVED	
		218	6,628	2,683							5,241	4,288				202	35100	9,529	FT	PIPE REMOVED, 24" AND UNDER	
		27	2,116	119							1,244	1,018				202	35200	2,262	FT	PIPE REMOVED, OVER 24"	
			5,642	741							3,511	2,872				202	38000	6,383	FT	GUARDRAIL REMOVED	
					26	10					20	16				SPECIAL	20252990	36	EACH	PARKING BLOCK REMOVED	
			1								1					202	56100	1	EACH	BUILDING DEMOLISHED, PARCEL NO. 135-WL, PLAYHOUSE	
		1	33	8							23	19				202	58000	42	EACH	MANHOLE REMOVED	
			1								1					202	58001	1	EACH	MANHOLE REMOVED, AS PER PLAN	81
		8	29	19							30	26				202	58100	56	EACH	CATCH BASIN REMOVED	
			44	24							37	31				202	58200	68	EACH	INLET REMOVED	
		1	2								2	1				202	58400	3	EACH	INLET ABANDONED	
		2		1							2	1				202	58500	3	EACH	CATCH BASIN ABANDONED	
			495								272	223				SPECIAL	20270000	495	FT	FILL AND PLUG EXISTING CONDUIT	81
			4,584	893							3,012	2,465				202	75000	5,477	FT	FENCE REMOVED	
			1								1					202	75250	1	EACH	GATE REMOVED	
			19	7							14	12				202	75610	26	EACH	VALVE BOX REMOVED	
			2								1	1				202	75801	2	EACH	DISCONNECT EXISTING CIRCUIT, AS PER PLAN	75
					3						2	1				202	98100	3	EACH	REMOVAL MISC.: PRIVATE SIGN REMOVED	
			22								12	10				202	98200	22	FT	REMOVAL MISC.: RAILROAD TIE WALL REMOVED	
					110						61	49				202	98200	110	FT	REMOVAL MISC.: TRENCH DRAIN REMOVED	
					1						1					202	98100	1	EACH	REMOVAL MISC.: GOAL POST REMOVED	
			8								4	4				202	98100	8	EACH	REMOVAL MISC.: PRIVATE LIGHT POLES AND FOUNDATIONS	
					173						95	78				202	98200	173	FT	REMOVAL MISC.: RAILROAD TIES REMOVED	
	100										55	45				202	98300	100	SY	REMOVAL MISC.: BRICK PAVERS REMOVED AND SALVAGED	83
					2,068						1,137	931				202	98300	2,068	SY	REMOVAL MISC.: RUNNING TRACK REMOVED	75
	42,843										23,564	19,279				202	98500	42,843	CY	REMOVAL MISC.: CONSTRUCTION DEBRIS REMOVED, AS PER PLAN	83
			191								105	86				202	98200	191	FT	REMOVAL MISC.:VACANT AEP CONDUIT BANK REMOVED	81
									240,176	390	132,311	108,255				203	10000	240,566	CY	EXCAVATION	
									106,281	186	58,557	47,910				203	20000	106,467	CY	EMBANKMENT	
60,016											33,009	27,007				203	20001	60,016	CY	EMBANKMENT, AS PER PLAN	80
									143,545		78,879	64,538		128		204	10000	143,545	SY	SUBGRADE COMPACTION	80
									3,092		1,673	1,369		50		204	13000	3,092	CY	EXCAVATION OF SUBGRADE	
									3,305		1,790	1,465		50		204	30010	3,305	CY	GRANULAR MATERIAL, TYPE B	
74											41	33				204	45000	74	HOUR	PROOF ROLLING	80
									7,615		4,118	3,369		128		204	50000	7,615	SY	GEOTEXTILE FABRIC	
										204	112	92				206	10500	204	TON	CEMENT	
										5,899	3,244	2,655				206	11000	5,899	SY	CURING COAT	
										5,899	3,244	2,655				206	15020	5,899	SY	CEMENT STABILIZED SUBGRADE, 14 INCHES DEEP	
									9		5	4				206	20000	9	HOUR	TEST ROLLING	
											LUMP					208	14001	LS		VIBRATION CONTROL AND MONITORING, AS PER PLAN	82
							2,138.5	37.5			1,197	979				606	15050	2,176	FT	GUARDRAIL, TYPE MGS	
							12				7	5				606	26150	12	EACH	ANCHOR ASSEMBLY, MGS TYPE E (MASH 2016)	
							2				1	1				606	26550	2	EACH	ANCHOR ASSEMBLY, MGS TYPE T	
							10				6	4				606	35002	10	EACH	MGS BRIDGE TERMINAL ASSEMBLY, TYPE 1	
							2	1			2	1				606	35102	3	EACH	MGS BRIDGE TERMINAL ASSEMBLY, TYPE 2	
							3				2	1				606	60002	3	EACH	IMPACT ATTENUATOR, TYPE 1 (UNIDIRECTIONAL)	79
							2,131	880			1,656	1,355				607	20000	3,011	FT	FENCE, TYPE CL	
							148				81	67				607	20001	148	FT	FENCE, TYPE CL, AS PER PLAN	83

CALCULATED JAP CHECKED HRB

GENERAL SUMMARY

FRA-70-14.54

520
2317

ms consultants, inc.

PLOT.CEL
ms consultants, inc.
msconsultants.com
www.msconsultants.com
Ohio DOT Workspace
70\71 East Interchange 2E
0 0.5" 1"
Batchplot Spec: \\msconsultants.com\files\production\03\60\06634_2E\standards\plotdrv\batchplt.spc
Pen Table: N:\03\60\06634_2E\standards\tables\V8i_ms_std_06634_2D_Plan View_NoClouds.tbl
Plot Driver: \\msconsultants.com\files\Standards\ustn\ohdot\v8i\ms\plotting\PDF.pltcfg
DGN: ohdotV8i
WF: 60-06634_2E_Columbus
34" x 22"
Model: Sheet
Printed: 2/13/2019 @ 2:36:57 PM
File: \\msconsultants.com\files\Production\03\60\06634_2E\roadway\sheets\1053220G001.dgn
View: FENCE_VIEW1
By: awhite

PLOT.CEL

ms consultants, inc.
msconsultants.com

www.msconsultants.com
Ohio DOT Workspace
70\71 East Interchange 2E

1" 0.5" 0

Batchplot Spec: \\msconsultants.com\files\production\03\60\06634_2E\standards\plotdrv\batchplt.spc
Pen Table: N:\03\60\06634_2E\standards\tables\V8i_ms_std_06634_2D_Plan View_NoClouds.tbl
Plot Driver: \\msconsultants.com\files\Standards\ustn\ohdot\v8i\ms\plotting\PDF.pltcfg
PLOT: ohdot\V8i

34" x 22"

Model: Sheet
Printed: 10/24/2018 @ 1:32:59 PM
File: N:\03\60\06634_2E\roadway\sheets\05322600002.dgn
View: FENCE_VIEW1
By: hbrendinger

SHEET NUM.										PART.						ITEM	ITEM EXT	GRAND TOTAL	UNIT	DESCRIPTION	SEE SHEET NO.
76	79	82	83	538	539	544	545	546	OFFICE	01/IMS/PV	02/NHS/PV	06/IMS/OT	07/MPO/OT	08/IMS/OT/COL	09/IMS/OT/INC						
																				ROADWAY CONTINUED	
				1						1						607	50900	1	EACH	GATE, TYPE CL	
				2						1	1					607	50901	2	EACH	GATE, TYPE CL, AS PER PLAN	83
				11,407	13,039					13,300	10,882	69	264			608	10000	24,515	SF	4" CONCRETE WALK	
				1,926	3,315					2,489	2,036		716			608	15000	5,241	SF	8" CONCRETE WALK	
				80	136					119	97					608	53021	216	SF	DETECTABLE WARNING, AS PER PLAN	1200
									7,196					7,196		608	98000	7,196	SF	WALKWAY, MISC.:BRICK PAVER CROSSWALK, AS PER PLAN	78
				1,097	3,192								233		4,056	608	98000	4,289	SF	WALKWAY, MISC.:BRICK PAVER WALK, AS PER PLAN	78
				8	17					14	11					608	98200	25	EACH	WALKWAY, MISC.: COLUMBUS CURB RAMP, TYPE A, AS PER PLAN	78
				1						1						608	98200	1	EACH	WALKWAY, MISC.:COLUMBUS CURB RAMP, TYPE G, AS PER PLAN	78
				5						3	2					608	98200	5	EACH	WALKWAY, MISC.:COLUMBUS CURB RAMP, TYPE P-1, AS PER PLAN	78
						709				390	319					622	10060	709	FT	CONCRETE BARRIER, SINGLE SLOPE, TYPE B	
						1,567	287			1,020	834					622	10100	1,854	FT	CONCRETE BARRIER, SINGLE SLOPE, TYPE B1	
						1,665	68			953	780					622	10120	1,733	FT	CONCRETE BARRIER, SINGLE SLOPE, TYPE C	
						32				18	14					622	10121	32	FT	CONCRETE BARRIER, SINGLE SLOPE, TYPE C, AS PER PLAN "A"	1105
						230				127	103					622	10121	230	FT	CONCRETE BARRIER, SINGLE SLOPE, TYPE C, AS PER PLAN "B"	1103
						2,004	366			1,304	1,066					622	10140	2,370	FT	CONCRETE BARRIER, SINGLE SLOPE, TYPE C1	
						5,693	587			3,454	2,826					622	10160	6,280	FT	CONCRETE BARRIER, SINGLE SLOPE, TYPE D	
						235				129	106					622	10161	235	FT	CONCRETE BARRIER, SINGLE SLOPE, TYPE D, AS PER PLAN "A"	1106
						99				54	45					622	10161	99	FT	CONCRETE BARRIER, SINGLE SLOPE, TYPE D, AS PER PLAN "B"	1106
						349				192	157					622	10161	349	FT	CONCRETE BARRIER, SINGLE SLOPE, TYPE D, AS PER PLAN "C"	1106
						595				327	268					622	10161	595	FT	CONCRETE BARRIER, SINGLE SLOPE, TYPE D, AS PER PLAN "D"	17
						5	2			4	3					622	10200	7	EACH	BARRIER TRANSITION	
						1				1						622	24840	1	EACH	CONCRETE BARRIER END SECTION, TYPE B	
						1				1						622	24861	1	EACH	CONCRETE BARRIER END SECTION, TYPE C1, AS PER PLAN	1109
						11				6	5					622	25000	11	EACH	CONCRETE BARRIER END SECTION, TYPE D	
						5				3	2					622	25004	5	EACH	CONCRETE BARRIER, END ANCHORAGE, REINFORCED, TYPE B	
						22	10			18	14					622	25006	32	EACH	CONCRETE BARRIER, END ANCHORAGE, REINFORCED, TYPE B1	
						29	2			17	14					622	25008	31	EACH	CONCRETE BARRIER, END ANCHORAGE, REINFORCED, TYPE C	
						3				2	1					622	25009	3	EACH	CONCRETE BARRIER, END ANCHORAGE, REINFORCED, TYPE C, AS PER PLAN "A	1104
						2				1	1					622	25009	2	EACH	CONCRETE BARRIER, END ANCHORAGE, REINFORCED, TYPE C, AS PER PLAN "C	1105
						37	7			24	20					622	25014	44	EACH	CONCRETE BARRIER, END ANCHORAGE, REINFORCED, TYPE C1	
						3				2	1					622	25015	3	EACH	CONCRETE BARRIER, END ANCHORAGE, REINFORCED, TYPE C1, AS PER PLAN "	1107
						1				1						622	25015	1	EACH	CONCRETE BARRIER, END ANCHORAGE, REINFORCED, TYPE C1, AS PER PLAN "	1106
						62	13			42	33					622	25050	75	EACH	CONCRETE BARRIER, END ANCHORAGE, REINFORCED, TYPE D	
						3				2	1					622	25051	3	EACH	CONCRETE BARRIER, END ANCHORAGE, REINFORCED, TYPE D, AS PER PLAN	1104
						120				66	54					622	90000	120	FT	BARRIER, MISC.: NEW JERSEY STYLE, TYPE B50, AS PER PLAN	1108
	1									1						623	38500	1	EACH	MONUMENT ASSEMBLY	
	2									1	1					623	40500	2	EACH	REFERENCE MONUMENT	
								16		9	7					SPECIAL	69050600	16	EACH	BOLLARD	83
3,850										2,118	1,732					SPECIAL	69065016	3,850	TON	WORK INVOLVING PETROLEUM CONTAMINATED SOIL	76
10,000										5,500	4,500					SPECIAL	69065022	10,000	GAL	WORK INVOLVING NON-REGULATED WATER	76
1,000										550	450					SPECIAL	69065024	1,000	GAL	WORK INVOLVING REGULATED WATER	76
		68								38	30					SPECIAL	69070120	68	FT	ASBESTOS ABATEMENT	82
			2							1	1					SPECIAL	69098000	2	EACH	BENCH	83
								113		62	51					SPECIAL	69098300	113	SY	GRASS PAVEMENT SYSTEM	76

CALCULATED JAP
CHECKED HRB

GENERAL SUMMARY

FRA-70-14.54

ms consultants, inc.

PLOT.CEL

ms consultants, inc.
msconsultants.com

SHEET NUM.									PART.				ITEM	ITEM EXT	GRAND TOTAL	UNIT	DESCRIPTION	SEE SHEET NO.
81	109	124	536	546	547	556	1507		01/IMS/PV	02/NHS/PV	06/IMS/OT	07/MPO/OT						
																	EROSION CONTROL	
			40						22	18			601	11001	40	SY	RIPRAP, TYPE D, AS PER PLAN	1260N
			2,391						1,315	1,076			601	21000	2,391	SY	CONCRETE SLOPE PROTECTION	
7.11			125						73	59.11			601	21050	132.11	SY	TIED CONCRETE BLOCK MAT, TYPE 1	
			195						107	88			601	21060	195	SY	TIED CONCRETE BLOCK MAT, TYPE 2	
	4,000								2,200	1,800			616	10000	4,000	MGAL	WATER	
				183					101	82			653	10000	183	CY	TOPSOIL FURNISHED AND PLACED	
2									1	1			659	00100	2	EACH	SOIL ANALYSIS TEST	
10,795									5,937	4,858			659	00300	10,795	CY	TOPSOIL	
						50					50		659	00510	50	SY	SEEDING AND MULCHING, CLASS 2	
97,255									53,490	43,765			659	10000	97,255	SY	SEEDING AND MULCHING	
							8,163					8,163	659	10001	8,163	SY	SEEDING AND MULCHING, AS PER PLAN	1512
4,863									2,675	2,188			659	14000	4,863	SY	REPAIR SEEDING AND MULCHING	
4,863									2,675	2,188			659	15000	4,863	SY	INTER-SEEDING	
13.57									7	6.57			659	20000	13.57	TON	COMMERCIAL FERTILIZER	
20.09									11	9.09			659	31000	20.09	ACRE	LIME	
276									152	124			659	35000	276	MGAL	WATER	
876									482	394			659	40000	876	MSF	MOWING	
				4,203	1,975				3,398	2,780			670	00720	6,178	SY	DITCH EROSION PROTECTION MAT, TYPE B	
									LUMP	LUMP			832	15000	LS		STORM WATER POLLUTION PREVENTION PLAN	
									LUMP	LUMP			832	15002	LS		STORM WATER POLLUTION PREVENTION INSPECTIONS	
									LUMP	LUMP			832	15010	LS		STORM WATER POLLUTION PREVENTION INSPECTION SOFTWARE	
									440,000	360,000			832	30000	800,000	EACH	EROSION CONTROL	

CALCULATED JAP
CHECKED HRB

GENERAL SUMMARY

FRA-70-14.54

ms consultants, inc.

Ohio DOT Workspace
70\71 East Interchange 2E
www.msconsultants.com
Batchplot Spec: \\msconsultants.com\files\production\03\60\06634_2E\standards\plotdrv\batchplt.spc
Pen Table: N:\03\60\06634_2E\standards\tables\V8i_ms_std_06634_2D_Plan View_NoClouds.tbl
Plot Driver: \\msconsultants.com\files\Standards\ustn\ohdot\v8i\ms\plotting\PDF.pltcfg
PCF: ohdotV8i
PCF: 60-06634_2E_Columbus
34" x 22"
Model: Sheet
Printed: 2/12/2019 @ 10:00:07 AM
File: N:\03\60\06634_2E\roadway\sheets\105322GG003.dgn
View: FENCE_VIEW1
By: awhite

PLOT.CEL

ms consultants, inc.
msconsultants.com

www.msconsultants.com
Ohio DOT Workspace
70\71 East Interchange 2E

1" 0.5" 0

Batchplot Spec: \\msconsultants.com\Files\production\03\60\06634_2E\standards\plotdrv\batchplt.spc
Pen Table: N:\03\60\06634_2E\standards\tables\V8i_ms_std_06634_2D_Plan View_NoClouds.tbl
Plot Driver: \\msconsultants.com\Files\Standards\ustn\ohdot\v8i\ms\plotting\PDF.pltcfg
PDF: ohdot\V8i
PDF: 60-06634_2E_Columbus

Model: Sheet
Printed: 2/12/2019 @ 10:00:15 AM
File: N:\03\60\06634_2E\roadway\sheets\05322GG004.dgn
View: FENCE_VIEW1
By: awhite
34" x 22"

SHEET NUM.																	PART.		ITEM	ITEM EXT	GRAND TOTAL	UNIT	DESCRIPTION	SEE SHEET NO.
79	81	124	536	540	541	542	543	548	549	550	551	552	553	554	555	01/IMS/PV	02/NHS/PV						
																							DRAINAGE	
			59													32	27	518	40010	59	FT	6" NON-PERFORATED CORRUGATED PLASTIC PIPE,	
																						INCLUDING SPECIALS	
			0.28													0.28		602	20000	0.28	CY	CONCRETE MASONRY	
								11,893	12,676	5,140	6,203	6,277	2,579			24,622	20,146	605	05100	44,768	FT	4" SHALLOW PIPE UNDERDRAINS	
												283				156	127	605	05200	283	FT	4" UNCLASSIFIED PIPE UNDERDRAINS	
								2,915	1,015	3,807	6,037	4,411	2,891	1,851	975	13,146	10,756	605	06000	23,902	FT	4" BASE PIPE UNDERDRAINS	
	200															110	90	605	13300	200	FT	6" UNCLASSIFIED PIPE UNDERDRAINS	
500																275	225	611	00400	500	FT	4" CONDUIT, TYPE E, FOR DRAINAGE CONNECTION	
	200															110	90	611	00406	200	FT	4" CONDUIT, TYPE F	
500																275	225	611	00406	500	FT	4" CONDUIT, TYPE F, FOR DRAINAGE CONNECTION	
								240	240	290	190	160	260	180	149	940	769	611	00410	1,709	FT	4" CONDUIT, TYPE F FOR UNDERDRAIN OUTLET	
		126		74												110	90	611	00900	200	FT	6" CONDUIT, TYPE B	
					55											30	25	611	00901	55	FT	6" CONDUIT, TYPE B, AS PER PLAN	75
500																275	225	611	01800	500	FT	8" CONDUIT, TYPE B, FOR DRAINAGE CONNECTION	
500																275	225	611	02000	500	FT	8" CONDUIT, TYPE C, FOR DRAINAGE CONNECTION	
					93											51	42	611	03100	93	FT	10" CONDUIT, TYPE B	
		118			118											130	106	611	04400	236	FT	12" CONDUIT, TYPE B	
				1,246	463											940	769	611	04401	1,709	FT	12" CONDUIT, TYPE B, AS PER PLAN	75
				12	6											10	8	611	04600	18	FT	12" CONDUIT, TYPE C	
				89	61											83	67	611	04601	150	FT	12" CONDUIT, TYPE C, AS PER PLAN	75
		63		3,991	511											2,511	2,054	611	05900	4,565	FT	15" CONDUIT, TYPE B	
					8											4	4	611	05900	8	FT	15" CONDUIT, TYPE B, 706.02	
					187											103	84	611	05901	187	FT	15" CONDUIT, TYPE B, AS PER PLAN	75
				8												4	4	611	05901	8	FT	15" CONDUIT, TYPE B, AS PER PLAN, 706.02	82
		6		924	15											520	425	611	06100	945	FT	15" CONDUIT, TYPE C	
						7	8									8	7	611	06100	15	FT	15" CONDUIT, TYPE C, 706.02	
					7											4	3	611	06101	7	FT	15" CONDUIT, TYPE C, AS PER PLAN	75
				175	64											131	108	611	06700	239	FT	15" CONDUIT, TYPE F	
				629	220											467	382	611	07400	849	FT	18" CONDUIT, TYPE B	
				270	227											273	224	611	07401	497	FT	18" CONDUIT, TYPE B, AS PER PLAN	75
				371												204	167	611	07401	371	FT	18" CONDUIT, TYPE B, AS PER PLAN, 706.02	82
				31	14											25	20	611	07600	45	FT	18" CONDUIT, TYPE C	
					164											90	74	611	07601	164	FT	18" CONDUIT, TYPE C, AS PER PLAN	75
				269												148	121	611	08900	269	FT	21" CONDUIT, TYPE B	
				535	37											315	257	611	10400	572	FT	24" CONDUIT, TYPE B	

CALCULATED JAP
CHECKED HRB

GENERAL SUMMARY

FRA-70-14.54

523
2317

ms consultants, inc.

PLOT.CEL
ms consultants, inc.
msconsultants.com
www.msconsultants.com
Ohio DOT Workspace
70\71 East Interchange 2E
0" 0.5" 1"
DGN: ohdot\V8i
PCF: 60-06634_2E_Columbus
Batchplot Spec: \\msconsultants.com\files\production\03\60\06634_2E\standards\plotdrv\batchplt.spc
Pen Table: N:\03\60\06634_2E\standards\tables\V8i_ms_std_with_cloudsinColor.tbl
Plot Driver: \\msconsultants.com\files\Standards\ustn\ohdot\v8i\ms\plotting\PDF.pltdrv
34" x 22"
View: FENCE_VIEW1
By: hbrendinger
Model: Sheet @ 12:03:12 PM
Printed: 2/13/2019
File: \\msconsultants.com\files\Production\03\60\06634_2E\roadway\sheets\10532GC0005.dgn

SHEET NUM.												PART.		ITEM	ITEM EXT	GRAND TOTAL	UNIT	DESCRIPTION	SEE SHEET NO.
81	124	540	541	542	543	544	546	547	550			01/IMS/PV	02/NHS/PV						
																		DRAINAGE CONTINUED	
		42										23	19	611	13400	42	FT	30" CONDUIT, TYPE B	
		568										312	256	611	13600	568	FT	30" CONDUIT, TYPE C	
	27	88	55									94	76	611	16400	170	FT	36" CONDUIT, TYPE B	
		1,254										690	564	611	19400	1,254	FT	42" CONDUIT, TYPE B	
				193								106	87	611	23800	193	FT	60" CONDUIT, TYPE B, 706.02	
				8								4	4	611	26200	8	FT	72" CONDUIT, TYPE B, 706.02	
				8								4	4	611	28200	8	FT	84" CONDUIT, TYPE B, 706.02	
		123										68	55	611	52402	123	FT	22" X 34" CONDUIT, TYPE B, 706.04	
				199								109	90	611	96600	199	FT	CONDUIT, BORED OR JACKED, 748.06, 16"	
				255								140	115	611	97400	255	FT	CONDUIT, MISC.: CONDUIT INSTALLED BY THE TRENCHLESS METHOD, 60"	89
		285										157	128	611	97400	285	FT	CONDUIT, MISC.: 18" C905 PIPE, CLASS 235, DR18, TYPE B, AS PER PLAN	81
		212										117	95	611	97400	212	FT	CONDUIT, MISC.:12" C900 PIPE, CLASS 150, DR18, TYPE B, AS PER PLAN	81
		19										10	9	611	97400	19	FT	CONDUIT, MISC.:15" C900 PIPE, CLASS 100, DR 25, TYPE B	81
		113										62	51	611	97400	113	FT	CONDUIT, MISC.:8" C900 PIPE, CLASS 100, DR25, TYPE B	82
				2								1	1	611	98180	2	EACH	CATCH BASIN, NO. 3A	
					1							1		611	98300	1	EACH	CATCH BASIN, NO. 5	
				1								1		611	98370	1	EACH	CATCH BASIN, NO. 6	
				1								1		611	98371	1	EACH	CATCH BASIN, NO. 6, AS PER PLAN	1260K
	4			21	6							17	14	611	98410	31	EACH	CATCH BASIN, NO. 8	
	1											1		611	98470	1	EACH	CATCH BASIN, NO. 2-2B	
				3								2	1	611	99094	3	EACH	INLET, NO. 3 FOR SINGLE SLOPE BARRIER, TYPE B	
				2	3							3	2	611	99100	5	EACH	INLET, NO. 3 FOR SINGLE SLOPE BARRIER, TYPE B1	
				5								3	2	611	99104	5	EACH	INLET, NO. 3 FOR SINGLE SLOPE BARRIER, TYPE C	
				3								2	1	611	99105	3	EACH	INLET, NO. 3 FOR SINGLE SLOPE BARRIER, TYPE C, AS PER PLAN	1260J
				9	1							6	4	611	99110	10	EACH	INLET, NO. 3 FOR SINGLE SLOPE BARRIER, TYPE C1	
				2								1	1	611	99111	2	EACH	INLET, NO. 3 FOR SINGLE SLOPE BARRIER, TYPE C1, AS PER PLAN "B"	1260I
				16	5							12	9	611	99114	21	EACH	INLET, NO. 3 FOR SINGLE SLOPE BARRIER, TYPE D	
	1			19	2							12	10	611	99574	22	EACH	MANHOLE, NO. 3	
				19	2							12	9	611	99575	21	EACH	MANHOLE, NO. 3, AS PER PLAN	79
				1								1		611	99575	1	EACH	MANHOLE, NO. 3, AS PER PLAN "A"	79
				8	9							9	8	611	99654	17	EACH	MANHOLE ADJUSTED TO GRADE	
				5	3							4	4	611	99660	8	EACH	MANHOLE RECONSTRUCTED TO GRADE	
				5								3	2	611	99661	5	EACH	MANHOLE RECONSTRUCTED TO GRADE, AS PER PLAN	79
4									1			3	2	611	99710	5	EACH	PRECAST REINFORCED CONCRETE OUTLET	
				1								1		611	99731	1	EACH	JUNCTION CHAMBER, AS PER PLAN	1260H
						120						66	54	613	41200	120	CY	LOW STRENGTH MORTAR BACKFILL	
								1				1		SPECIAL	69098000	1	EACH	12" CHECK VALVE	
							5					3	2	SPECIAL	69098000	5	EACH	CITY OF COLUMBUS 60" CURB INLET	1227
								1				1		SPECIAL	69098000	1	EACH	CITY OF COLUMBUS 60" CURB INLET FOR GRANITE CURBING	1227
							30	5				20	15	SPECIAL	69098000	35	EACH	CITY OF COLUMBUS DOUBLE CURB AND GUTTER INLET	1260M
								6				3	3	SPECIAL	69098000	6	EACH	CITY OF COLUMBUS DOUBLE CURB AND GUTTER INLET FOR GRANITE CURBING	1260M
							1	1				1	1	SPECIAL	69098000	2	EACH	CITY OF COLUMBUS STANDARD CURB AND GUTTER INLET	1260L
								4				2	2	SPECIAL	69098000	4	EACH	CITY OF COLUMBUS STANDARD CURB AND GUTTER INLET FOR GRANITE CURBING	1260L
							14	9				13	10	SPECIAL	69098000	23	EACH	CITY OF COLUMBUS, MANHOLE, TYPE C	1221
								2				1	1	SPECIAL	69098000	2	EACH	MANHOLE REHABILITATION	86
				769	437							663	543	839	30000	1,206	FT	TRENCH DRAIN WITH STANDARD GRATE	
					7							4	3	839	30100	7	FT	TRENCH DRAIN WITH PEDESTRIAN GRATE	
				11								6	5	839	30001	11	FT	TRENCH DRAIN WITH STANDARD GRATE, AS PER PLAN	76

CALCULATED JAP
CHECKED HRB

GENERAL SUMMARY

FRA-70-14.54

524
2317

PLOT.CEL

ms consultants, inc.
msconsultants.com

SHEET NUM.												PART.					ITEM	ITEM EXT	GRAND TOTAL	UNIT	DESCRIPTION	SEE SHEET NO.
108	109	536	537	538	539	544	545	556	89	OFFICE	125	01/IMS/PV	02/NHS/PV	06/IMS/OT	07/MPO/OT	09/IMS/OT/INC						
																					PAVEMENT	
		1,847	2,445									2,361	1,931				252	01500	4,292	FT	FULL DEPTH PAVEMENT SAWING	
		384	255									351	288				253	01000	639	SY	PAVEMENT REPAIR	
24,313										4,262		15,716	12,859				254	01000	28,575	SY	PAVEMENT PLANING, ASPHALT CONCRETE, 1.5" DEPTH	
										14,491		7,970	6,521				254	01001	14,491	SY	PAVEMENT PLANING, ASPHALT CONCRETE, AS PER PLAN	17
										42,007		23,101	18,900		6		302	46000	42,007	CY	ASPHALT CONCRETE BASE, PG64-22	
										25,800		14,178	11,600		22		304	20000	25,800	CY	AGGREGATE BASE	
										13,954		7,618	6,233		103		305	12010	13,954	SY	8" CONCRETE BASE, CLASS QC1	
										21,721	1,123	12,555	10,273		16		407	20000	22,844	GAL	NON-TRACKING TACK COAT	
										679		371	303		5		441	50000	679	CY	ASPHALT CONCRETE SURFACE COURSE, TYPE 1, (448), PG64-22	
										893		487	399		7		441	50300	893	CY	ASPHALT CONCRETE INTERMEDIATE COURSE, TYPE 2, (448)	
										35		19	16				441	50400	35	CY	ASPHALT CONCRETE SURFACE COURSE, TYPE 1, (448), (DRIVEWAYS)	
										9,379		5,158	4,221				442	00100	9,379	CY	ANTI-SEGREGATION EQUIPMENT	89
1,013										5,340		3,494	2,859				442	10000	6,353	CY	ASPHALT CONCRETE SURFACE COURSE, 12.5 MM, TYPE A (446)	
																					, PG70-22	
										6,364		3,500	2,864				442	10100	6,364	CY	ASPHALT CONCRETE INTERMEDIATE COURSE, 19 MM, TYPE A (446)	
										156		86	70				442	20201	156	CY	ASPHALT CONCRETE INTERMEDIATE COURSE, 19 MM,	76
																					TYPE A (448), AS PER PLAN, PG64-28	
										17		9	8				452	12010	17	SY	8" NON-REINFORCED CONCRETE PAVEMENT, CLASS QC1	
										168		92	76				452	14110	168	SY	11" NON-REINFORCED CONCRETE PAVEMENT, CLASS QC1	
										920		506	414				452	15010	920	SY	12" NON-REINFORCED CONCRETE PAVEMENT, CLASS QC1	
				398	43							243	198				609	24510	441	FT	CURB, TYPE 4-C	
				3,837	501							2,386	1,952				609	98000	4,338	FT	CURB, MISC.:COLUMBUS 18" CONCRETE CURB, AS PER PLAN	1202
					747							411	336				609	98000	747	FT	CURB, MISC.:RESET EXISTING GRANITE CURB, AS PER PLAN	78
				128	1,480											1,608	609	98000	1,608	FT	CURB, MISC.:STRAIGHT 18" GRANITE CURB, AS PER PLAN "A"	78
						0.52	0.73					0.69	0.56				618	41000	1.25	MILE	EDGE LINE, RUMBLE STRIPE (ASPHALT CONCRETE)	
									14,000			7,700	6,300				875	10000	14,000	LB	LONGITUDINAL JOINT ADHESIVE	89
										503		277	226				442	10001	503	CY	ASPHALT CONCRETE SURFACE COURSE, 12.5 MM, TYPE A (446), AS PE	
										623		343	280				442	10101	623	CY	ASPHALT CONCRETE INTERMEDIATE COURSE, 19 MM, TYPE A (446), AS	
											239	131	108				302	46001	239	CY	ASPHALT CONCRETE BASE, AS PER PLAN , PG64-22	309
											248	136	112				304	20001	248	CY	AGGREGATE BASE, AS PER PLAN	309
											142	78	64				441	50101	142	CY	ASPHALT CONCRETE SURFACE COURSE, TYPE 1, (448),	309
																					AS PER PLAN, PG64-22	
											316	174	142				441	50301	316	CY	ASPHALT CONCRETE INTERMEDIATE COURSE, TYPE 2, (448),	309
																					AS PER PLAN, PG64-22	

CALCULATED JAP CHECKED HRB

GENERAL SUMMARY

FRA-70-14.54

525
2317

ms consultants, inc.

Ohio DOT Workspace
70\71 East Interchange 2E
www.msconsultants.com

1" 0.5" 0

Batchplot Spec: \\msconsultants.com\files\production\03\60\06634_2E\standards\oldr\batchplt.SPC
Pen Table: \\msconsultants.com\files\Standards\astm\ohdot\V8i\ms\plotting\pen\V8i_ms_std.TBL
Plot Driver: \\msconsultants.com\files\Standards\astm\ohdot\v8i\ms\plotting\PDF.prf
PDF: ohdotV8i
DGN: 60-06634_2E_Columbus

34" x 22"

Model: Sheet
Printed: 2/27/2019 @ 12:06:23 PM
File: \\msconsultants.com\files\Production\03\60\06634_2E\roadway\sheets\1053226G006.dgn
View: SHEET
By: dhall

PLOT.CEL

ms consultants, inc.
msconsultants.com

SHEET NUM.									PART.				ITEM	ITEM EXT	GRAND TOTAL	UNIT	DESCRIPTION	SEE SHEET NO.
122	544	545	546	547		556	1507	1286	01/IMS/PV	02/NHS/PV	06/IMS/OT	07/MPO/OT						
																	WATER WORK	
						40					40		203	98000	40	CY	ROADWAY, MISC.:INCREASE OR DECREASE IN	1262
																	EXCAVATION AND BACKFILL (COL. 801)	
						20					20		511	71100	20	CY	CONCRETE, MISC.: CONCRETE BLOCKING, CLASS C, INCREASE OR DECREASE (COL. 801)	
				1							1		638	10400	1	EACH	FIRE HYDRANT ADJUSTED TO GRADE	
						2					2		SPECIAL	63820522	2	EACH	4" GATE VALVE WITH VALVE BOX, (COL. 802)	
						10					10		SPECIAL	63820538	10	EACH	6" GATE VALVE WITH VALVE BOX, (COL. 802)	
						5					5		SPECIAL	63820586	5	EACH	12" GATE VALVE WITH VALVE BOX, (COL. 802)	
						5					5		SPECIAL	63820750	5	EACH	6" FIRE HYDRANT, TYPE A (COL. 809)	1245
						2					2		SPECIAL	63820750	2	EACH	6" FIRE HYDRANT, TYPE A MODIFIED (COL. 809)	1246
						6					6		SPECIAL	63820758	6	EACH	FIRE HYDRANT ABANDONED, (COL. 809)	
						1					1		638	98000	1	EACH	WATER WORK, MISC.: 10" WATER SERVICE TAP, TRANSFERRED (COL. 805)	
			3	20							23		638	98000	23	EACH	WATER WORK, MISC.: HEAVY DUTY VALVE BOX ADJUSTED TO GRADE (COL. 807)	1242
						1					1		638	98000	1	EACH	WATER WORK, MISC.: 12" WATER SERVICE TAP, TRANSFERRED (COL. 805)	1248
						1					1		638	98000	1	EACH	WATER WORK, MISC.: 24" x 6" TAPPING SLEVE AND VALVE (COL. 803)	
						1					1		638	98000	1	EACH	WATER WORK, MISC.: 1 1/2" WATER SERVICE TAP, TRANSFERRED (COL. 805)	
											LUMP		638	98100	LS		WATER WORK, MISC.: AS-BUILT PLANS	1261
						1,052					1,052		638	98600	1,052	FT	WATER WORK, MISC.: 12" DUCTILE IRON WATER PIPE AND FITTINGS (COL. 801)	
						27					27		638	98600	27	FT	WATER WORK, MISC.: 4" DUCTILE IRON WATER PIPE AND FITTINGS (COL. 801)	
						5					5		638	98600	5	FT	WATER WORK, MISC.: 8" DUCTILE IRON WATER PIPE AND FITTINGS (COL. 801)	
						170					170		638	98600	170	FT	WATER WORK, MISC.: 6" DUCTILE IRON WATER PIPE AND FITTINGS (COL. 801)	
						500					500		SPECIAL	69099400	500	LB	FITTINGS, INCREASE OR DECREASE (COL.801)	1262
																	LIGHTING	1441-1442
																	ELECTRICAL	
								4			4		SPECIAL	69098000	4	EACH	INSTALLATION OF TRANSFORMER AND ENCLOSURE PADS	1287
								11			11		SPECIAL	69098100	11	FT	2-3" CONDUIT, ENCASED	1287
								61			61		SPECIAL	69098100	61	FT	2-5" CONDUIT, ENCASED	1287
								54			54		SPECIAL	69098100	54	FT	4-5" CONDUIT, ENCASED	1287
								LUMP			LUMP		SPECIAL	69098400	LS		AEP POWER SERVICE INSTALLATION	1287
																	TRAFFIC SURVEILLANCE	1405
																	TRAFFIC CONTROL	1302-1303
	359	17							207	169			626	00102	376	EACH	BARRIER REFLECTOR, TYPE 1 BI-DIRECTIONAL	
	51	85							75	61			626	00102	136	EACH	BARRIER REFLECTOR, TYPE 1 ONE WAY	
	55	2							31	26			626	00110	57	EACH	BARRIER REFLECTOR, TYPE 2 BI-DIRECTIONAL	
	11								6	5			626	00110	11	EACH	BARRIER REFLECTOR, TYPE 2 ONE WAY	
2,372									1,305	1,067			630	80300	2,372	SF	SIGN, TEMPORARY OVERLAY	
36									20	16			630	89894	36	EACH	REMOVAL OF TEMPORARY OVERLAY SIGN AND DISPOSAL	
																	TRAFFIC SIGNALS	1380-1381
																	LANDSCAPING	
							40					40	661	20020	40	EACH	DECIDUOUS SHRUB, 18" HEIGHT, (#3 Container) (Rhus Aromatica 'Gro-Low')	1511
							199					199	661	20020	199	EACH	DECIDUOUS SHRUB, 18" HEIGHT, (Euonymus Alatus Compactus)	1511
							70					70	661	20020	70	EACH	DECIDUOUS SHRUB, 18" HEIGHT, (Rosa X Snow Pavement)	1511
							126					126	661	20020	126	EACH	DECIDUOUS SHRUB, 18" HEIGHT, B&B (CORNUS ALBA SIBERIAN RED GNOME)	1511
							54					54	661	40060	54	EACH	DECIDUOUS TREE, 1-1/2" CALIPER(Gleditsia Triacanthos Skyline)	1511
							23					23	661	40120	23	EACH	DECIDUOUS TREE, 3" CALIPER, (Ulmus x. Morton 'Acolade')	1511
							15					15	661	40120	15	EACH	DECIDUOUS TREE, 3" CALIPER, 14' Min Ht., B&B, (Platanus x Acerfolia)	1511
							1,055					1,055	661	99900	1,055	EACH	PLANTING, MISC.: PERENNIAL, (Hemerocallis Hybrid Stella De Oro)	1511
							76,096					76,096	661	99900	76,096	EACH	PLANTING, MISC.: PERENNIAL, (Narcissus Mt Hood)	1511
							948					948	661	99900	948	EACH	PLANTING, MISC.: PERENNIAL, (Pennisetum Alopecuroides Hameln)	1511
							76,096					76,096	661	99900	76,096	EACH	PLANTING, MISC.:PERENNIAL, (Hedera Helix)	1511
							13					13	SPECIAL	69098000	13	EACH	TREE GRATE, 4' X 8'	1511
												LUMP	SPECIAL	69098400	LS		COMPLETE IRRIGATION SYSTEM FOR PARSONS AVENUE	1529
							494					494	SPECIAL	69098700	494	CY	MISC.: SAND-BASED STRUCTURAL SOIL BASE MIX FURNISHED & PLACED (9" DEPTH LOWER HORIZON)	1508
							1,317					1,317	SPECIAL	69098700	1,317	CY	MISC.: SAND-BASED STRUCTURAL SOIL FURNISHED & PLACED (24" DEPTH UPPER HORIZON)	1508
							1,337					1,337	SPECIAL	69098700	1,337	CY	MISC.: TREE AND PLANTS BASE MIX FURNISHED & PLACED (9" DEPTH LOWER HORIZON)	1508
							3,560					3,560	SPECIAL	69098700	3,560	CY	MISC.: TREE AND PLANTS SOIL MIX FURNISHED & PLACED (24" DEPTH UPPER HORIZON)	1508
																	STRUCTURE REPAIR (CTY-RTE-SECT or SFN)	

CALCULATED JAP
CHECKED HRB

GENERAL SUMMARY

FRA-70-14.54

526
2317

ms consultants, inc.

Batchplot Spec: \\msconsultants.com\files\production\03\60\06634_2E\standards\plotdrv\batchplt.spc
Pen Table: N:\03\60\06634_2E\standards\tables\V8i_ms_std_06634_2D_Plan View_NoClouds.tbl
Plot Driver: \\msconsultants.com\files\standards\usen\ohdot\v8i\ms\plotting\PDF.pltcfg
Model: Sheet @ 12:37:57 PM By: hbrendinger
Printed: 2/12/2019 View: FENCE_VIEW1
File: N:\03\60\06634_2E\roadway\sheets\05322600007.dgn

Ohio DOT Workspace
70\71 East Interchange 2E
www.msconsultants.com

1" 0.5" 0

34" x 22"

PLOT.CEL
ms consultants, inc.
msconsultants.com
www.msconsultants.com
Ohio DOT Workspace
70\71 East Interchange 2E
1"
0.5"
0
Batchplot Spec: \\msconsultants.com\files\production\03\60\06634_2E\standards\oladv\batchplt.spc
Pen Table: \\msconsultants.com\files\Standards\usln\ohdot\v8i\ms\plotting\pen\V8i_ms_std.tbl
Plot Driver: \\msconsultants.com\files\Standards\usln\ohdot\v8i\ms\plotting\PDF: ohdotV8i
PCF: 60-06634_2E_Columbus
Model: Sheet
Printed: 2/27/2019 @ 12:24:57 PM
File: \\msconsultants.com\files\Production\03\60\06634_2E\roadway\sheets\1053226G008.dgn
34" x 22"
View: FENCE_VIEW1
By: hbrendinger

SHEET NUM.										PART.		ITEM	ITEM EXT	GRAND TOTAL	UNIT	DESCRIPTION	SEE SHEET NO.
105	106	107	108	109	110	122	536	537	542	01/IMS/PV	02/NHS/PV						
																STRUCTURE REPAIR (CTY-RTE-SECT or SFN)	
									LS	LS	LS	503	11101	LS		COFFERDAMS AND EXCAVATION BRACING, AS PER PLAN	89
							18,344	2,267		11,336	9,275	512	10000	20,611	SY	SEALING OF CONCRETE SURFACES (EPOXY URETHANE)	
																RETAINING WALLS (I-11)	1549
																RETAINING WALLS (I-8A)	1555
																RETAINING WALLS (I-9A-1)	1565
																RETAINING WALLS (I-9A-2)	1573
																RETAINING WALLS (I-13-2)	1582
																RETAINING WALLS (I-13A)	1599
																RETAINING WALLS (I-13B)	1607
																RETAINING WALLS (I-13D)	1613
																RETAINING WALLS (I-13E)	1625
																RETAINING WALLS (I-7)	1629
																RETAINING WALLS (I-13T)	1639
																STRUCTURE OVER 20 FOOT SPAN (FRA-70-1461P)	1653
																STRUCTURE OVER 20 FOOT SPAN (FRA-70-1476)	1718
																STRUCTURE OVER 20 FOOT SPAN (FRA-70-1493 L/R)	1802-1803
																STRUCTURE OVER 20 FOOT SPAN (FRA-70-1498)	1834
																STRUCTURE OVER 20 FOOT SPAN (FRA-33-1747)	1908
																MAINTENANCE OF TRAFFIC	
		4,624								2,543	2,081	614	11110	4,624	HOUR	LAW ENFORCEMENT OFFICER WITH PATROL CAR FOR ASSISTANCE	
						159				87	72	SPECIAL	61412200	159	FT	WORK ZONE GUARDRAIL	
						62				34	28	614	12336	62	EACH	WORK ZONE IMPACT ATTENUATOR (UNIDIRECTIONAL)	
	3									2	1	614	12410	3	EACH	SPEED ZONE AHEAD SYMBOL SIGN	
	LUMP									LUMP		614	12420	LS		DETOUR SIGNING	
	9									5	4	614	12470	9	EACH	WORK ZONE SPEED LIMIT SIGN	
	9									5	4	614	12484	9	EACH	WORK ZONE INCREASED PENALTIES SIGN	
40										22	18	614	12500	40	EACH	REPLACEMENT SIGN	
80										44	36	614	12600	80	EACH	REPLACEMENT DRUM	
			600			6,020				3,641	2,979	614	12801	6,620	EACH	WORK ZONE RAISED PAVEMENT MARKER, AS PER PLAN	108
101										56	45	614	13200	101	EACH	BARRIER REFLECTOR, TYPE A	
												614	13300	4,343	EACH	BARRIER REFLECTOR, TYPE B	
						1,272				700	572	614	13350	1,272	EACH	OBJECT MARKER, ONE WAY	
275						13				158	130	614	13360	288	EACH	OBJECT MARKER, TWO WAY	
75,000										41,250	33,750	614	18000	75,000	EACH	MAINTAINING TRAFFIC, MISC.:BRIDGE DECK AND PAVEMENT PATCHING	105
			1,768							972	796	614	18020	1,768	HOUR	MAINTAINING TRAFFIC, MISC.:LAW ENFORCEMENT OFFICER (LEO) WITHOUT PATROL CAR, AS PER PLAN	108
						580				319	261	614	18030	580	FT	MAINTAINING TRAFFIC, MISC.: PORTABLE WATER FILED BARRIER PROTECTED PEDESTRIAN WALKWAY	105
				11,850						6,518	5,332	614	18030	11,850	FT	MAINTAINING TRAFFIC, MISC.:REMOVAL OF RUMBLE STRIPS	109
		510								281	229	614	18601	510	SNMT	PORTABLE CHANGEABLE MESSAGE SIGN, AS PER PLAN	107
						3.94				2.17	1.77	614	20110	3.94	MILE	WORK ZONE LANE LINE, CLASS I, 6", 642 PAINT	
		0.5								0.28	0.22	614	20210	0.5	MILE	WORK ZONE LANE LINE, CLASS I, 6", 740.06, TYPE I	
			12.6							6.93	5.67	614	20400	12.6	MILE	WORK ZONE LANE LINE, CLASS II, 4"	
						13.69				7.53	6.16	614	22110	13.69	MILE	WORK ZONE EDGE LINE, CLASS I, 6", 642 PAINT	
						19,470				10,709	8,761	614	23210	19,470	FT	WORK ZONE CHANNELIZING LINE, CLASS I, 12", 642 PAINT	
		1,000								550	450	614	23400	1,000	FT	WORK ZONE CHANNELIZING LINE, CLASS I, 8", 740.06, TYPE I	
						2,545				1,400	1,145	614	24200	2,545	FT	WORK ZONE DOTTED LINE, CLASS I, 642 PAINT	
		1,000								550	450	614	24400	1,000	FT	WORK ZONE DOTTED LINE, CLASS I, 740.06, TYPE I	
						16				9	7	614	30000	16	EACH	WORK ZONE ARROW, CLASS I	
		10								6	4	614	30400	10	EACH	WORK ZONE ARROW, CLASS I, 740.06, TYPE I	
						1,700				935	765	614	40000	1,700	FT	LONGITUDINAL CHANNELIZER	
						0.37					0.37	614	98000	0.37	MILE	WORK ZONE PAVEMENT MARKING, MISC.: CENTER LINE, SOLID DOUBLE, YELLOW, 5"	108
						1.15				1	0.15	614	98000	1.15	MILE	WORK ZONE PAVEMENT MARKING, MISC.: EDGE LINE, 5"	108
						0.02				0.02		614	98000	0.02	MILE	WORK ZONE PAVEMENT MARKING, MISC.: LANE LINE, 5"	108
						20.58				11.32	9.26	614	98000	20.58	MILE	WORK ZONE PAVEMENT MARKING, MISC.:EDGE LINE, 6"	108
						4.76				2.61	2.15	614	98000	4.76	MILE	WORK ZONE PAVEMENT MARKING, MISC.:LANE LINE, 6"	108
						712				392	320	614	98100	712	FT	WORK ZONE PAVEMENT MARKING, MISC.: DOTTED LINE, 5"	108
						1,253				689	564	614	98100	1,253	FT	WORK ZONE PAVEMENT MARKING, MISC.: DOTTED LINE, WHITE, 6"	108
						90				50	40	614	98100	90	FT	WORK ZONE PAVEMENT MARKING, MISC.: STOP LINE, 20"	108
						1,063				585	478	614	98100	1,063	FT	WORK ZONE PAVEMENT MARKING, MISC.: TRANSVERSE LINE, 24"	108
						967				532	435	614	98100	967	FT	WORK ZONE PAVEMENT MARKING, MISC.:CHANNELIZING LINE, 10"	108
						71,559				39,357	32,202	614	98100	71,559	FT	WORK ZONE PAVEMENT MARKING, MISC.:CHANNELIZING LINE, 12"	108
						5,459				3,002	2,457	615	20000	5,459	SY	PAVEMENT FOR MAINTAINING TRAFFIC, CLASS A	
						13,509				7,430	6,079	615	20001	13,509	SY	PAVEMENT FOR MAINTAINING TRAFFIC, CLASS A, AS PER PLAN	109
						76				42	34	615	25000	76	SY	PAVEMENT FOR MAINTAINING TRAFFIC, CLASS B	
					600					330	270	615	25001	600	SY	PAVEMENT FOR MAINTAINING TRAFFIC, CLASS B, AS PER PLAN, TYPE 1	110
					8,500					4,675	3,825	615	25001	8,500	SY	PAVEMENT FOR MAINTAINING TRAFFIC, CLASS B, AS PER PLAN, TYPE 2	110
					500					275	225	615	25001	500	SY	PAVEMENT FOR MAINTAINING TRAFFIC, CLASS B, AS PER PLAN, TYPE 3	110

CALCULATED JAP
CHECKED HRB

GENERAL SUMMARY

FRA-70-14.54

527
2317

PLOT.CEL
ms consultants, inc.
msconsultants.com
www.msconsultants.com
Ohio DOT Workspace
70\71 East Interchange 2E

SHEET NUM.		PART.		ITEM	ITEM	GRAND	UNIT	DESCRIPTION	SEE SHEET NO.
109	122	01/IMS/PV	02/NHS/PV		EXT	TOTAL			
								MAINTENANCE OF TRAFFIC CONTINUED	
11,850		6,518	5,332	618	40100	11,850	FT	**RUMBLE STRIPS, (ASPHALT CONCRETE)**	
	49,216	27,069	22,147	622	41000	49,216	FT	PORTABLE BARRIER, 32"	
	11,832	6,508	5,324	622	41011	11,832	FT	PORTABLE BARRIER, 50", AS PER PLAN	109
	3	2	1	622	41050	3	EACH	PORTABLE BARRIER, "Y" CONNECTOR	
	9	5	4	814	00010	9	EACH	INTERSTATE ELONGATED ROUTE SHIELD SYMBOL MARKING, TYPE B125	
	11	6	5	814	00016	11	EACH	CARDINAL DIRECTION (NORTH, SOUTH, WEST & EAST) MARKING, TYPE B125	
								INCIDENTALS	
		LUMP	LUMP	108	10000	LS		**CPM PROGRESS SCHEDULE**	
		LUMP	LUMP	SPECIAL	11110000	LS		DEPARTMENTS SHARE FACILITATED PARTNERING COSTS	
		LUMP	LUMP	614	11000	LS		MAINTAINING TRAFFIC	105
		15	15	619	16021	30	MNTH	FIELD OFFICE, TYPE C, AS PER PLAN	77
		LUMP	LUMP	623	10000	LS		CONSTRUCTION LAYOUT STAKES AND SURVEYING	
		LUMP	LUMP	624	10000	LS		MOBILIZATION	
		LUMP	LUMP	878	25000	LS		INSPECTION AND COMPACTION TESTING OF UNBOUND MATERIALS	

CALCULATED JAP
CHECKED HRB

GENERAL SUMMARY

FRA-70-14.54

ms consultants, inc.

PLOT.CEL
ms consultants, inc.
msconsultants.com
Ohio DOT Workspace
70\71 East Interchange 2E
www.msconsultants.com
1"
0.5"
0
OPF: ohdot\V8i
PCF: 60-06634_2E_Columbus
Batchplot Spec: \\msconsultants.com\files\production\03\60\06634_2E\standards\plotdir\batchplt.spc
Pen Table: N:\03\60\06634_2E\standards\tables\V8i_ms_std_with_cloudsinColor.tbl
Plot Driver: \\msconsultants.com\files\Standards\usetn\ohdot\v8i\ms\plotting\PDF.pltcfg
34" x 22"
View: FENCE_VIEW1
By: hlorendinger
Model: Sheet
Printed: 2/15/2019 @ 5:37:10 PM
File: \\msconsultants.com\files\Production\03\60\06634_2E\roadway\sheets\10532205001.dgn

ESTIMATED QUANTITY SHEET NO.	202 STRUCTURE REMOVED CY	202 STRUCTURE REMOVED LS	202 STRUCTURE REMOVED LS	202 PAVEMENT REMOVED SY		202 WALK REMOVED SF	202 CONCRETE MEDIAN REMOVED SY	202 CONCRETE BARRIER REMOVED FT	202 CONCRETE BARRIER REMOVED FOR STORAGE FT	202 CURB REMOVED FT		202 CONCRETE SLOPE PROTECTION REMOVED SY	202 PIPE REMOVED, 24" AND UNDER FT	202 PIPE REMOVED, OVER 24" FT	202 GUARDRAIL REMOVED FT			202 BUILDING DEMOLISHED, PARCEL NO. 135-WL, PLAYHOUSE EACH	202 VALVE BOX REMOVED EACH	202 MANHOLE REMOVED EACH	202 MANHOLE REMOVED, AS PER PLAN EACH	202 CATCH BASIN REMOVED EACH	202 INLET REMOVED EACH			202 CATCH BASIN ABANDONED EACH	202 INLET ABANDONED EACH	SPECIAL FILL AND PLUG EXISTING CONDUIT FT	202 FENCE REMOVED FT		202 GATE REMOVED EACH	202 DISCONNECT EXISTING CIRCUIT, AS PER PLAN EACH	202 REMOVAL MISC.: RAILROAD TIE WALL REMOVED EACH	202 REMOVAL MISC.: PRIVATE LIGHT POLES AND FOUNDATIONS EACH	202 REMOVAL MISC.: VACANT AEP CONDUIT BANK REMOVED FT	
581				392				281		100													1													
583				1409				654				63	12									1					1									
584																																				
586				2722				825		167		71	203		167					1		1	2					187								
587																																				
589								166	140				139		155								1						119							
590																																				
592								173	60				415		340					2		3	2						62							
593																																				
595				413				93		1001			289		538					1	1		1													
596																																				
598				3338				1088		856		13	411		490					3		3	4													
598A																																				
600				1270		1136		40		547		4	79										3						434							
601																																				
603								326		1416		10	295		480							2	4													
604																																				
606								7		1885			552	326	846					7		4	2						74							
607																																				
608																																				
610										1163			437	274	420					2		2	3						247							
611																																				
613				160		57				638			396	338	243				1			3		2	3				511				22			
614																																				
615																																				
617		1	1	3628				686		428			184		177					1		1	3													
618																																				
619																																				
621				4089				500		501			777							1		1	4													
622																																				
623																																				
625				2821		40		427		1596			781		190					4			1					308	672			1		4		
626																																				
627																																				
629				164						1219			330		207					1									473							
630																																	1		4		
632				1361		2121		132		1906			194		215							3	1						667							
633																																				
634																																				
636	24			1767		2295		68		2421			357	178	390						11	2		3	3				480							
637																																				
639	373			1739		2846	74			3261			344	500	306						7	2		1	3				545							
640																																				
641													132																								
643				1138		1690		497		1608			301	500	478						1	3		2	3				300		1				191		
644																																				
645																																				
TOTALS CARRIED TO GENERAL SUMMARY	397	1	1	26411	0	10185	74	5963	200	20713	0	161	6628	2116	5642	0	0	1	19	33	1	29	44	0	0	0	2	495	4584	0	1	2	22	8	191	0

JAP
CHECKED
HRB

ROADWAY SUB-SUMMARY - 1A

FRA-70-14.54

ms consultants, inc.

ESTIMATED QUANTITY SHEET NO.

ESTIMATED QUANTITY SHEET NO.				202 PAVEMENT REMOVED SY	202 CONCRETE SLOPE PROTECTION REMOVED SY	202 WALK REMOVED SF	202 CONCRETE MEDIAN REMOVED SY	202 CONCRETE BARRIER REMOVED FT	202 CURB REMOVED FT	202 GRANITE CURB REMOVED FOR REUSE FT			202 PIPE REMOVED, 24" AND UNDER FT	202 PIPE REMOVED, OVER 24" FT	202 GUARDRAIL REMOVED FT	202 VALVE BOX REMOVED EACH				202 MANHOLE REMOVED EACH		202 CATCH BASIN REMOVED EACH	202 INLET REMOVED EACH		202 CATCH BASIN ABANDONED EACH			202 FENCE REMOVED FT							
647								518	500				385	119						1		2	5					52							
648																																			
650				137				778	1000				475							2			2					264							
								278	295																										
659				1662				51	871				154		249							1	3												
660																																			
662				62	3				29						110																				
669				1042					738				271									2	4												
670																																			
715B				1216					792				172		268							2													
717																																			
719				1252		2428			506				89		114	2							2					260							
720																																			
722				2070		6952			744				264			4				1			5					317							
723																																			
727				1680		2904			449	747			873			1				4		12	3		1										
728																																			
732				879			259		154																										
734						583																													
1327								90																											
TOTALS CARRIED TO GENERAL SUMMARY	**0**	**0**	**0**	**10000**	**3**	**12867**	**259**	**1715**	**6078**	**747**	**0**	**0**	**2683**	**119**	**741**	**7**	**0**	**0**	**0**	**8**	**0**	**19**	**24**	**0**	**1**	**0**	**0**	**893**	**0**	**0**	**0**	**0**	**0**	**0**	**0**

CALCULATED JAP
CHECKED HRB

ROADWAY SUB-SUMMARY - 1B

FRA-70-14.54

PLOT.CEL
ms consultants, inc.
msconsultants.com
www.msconsultants.com
Ohio DOT Workspace
70\71 East Interchange 2E
UCF: ohdotV8i
PCF: 60-06634_2E_Columbus
Batchplot Spec: \\msconsultants.com\files\production\03\60\06634_2E\standards\plotdrv\batchplt.spc
Pen Table: N:\03\60\06634_2E\standards\tables\V8i_ms_std_06634_2D_Plan View.tbl
Plot Driver: \\msconsultants.com\files\Standards\ustn\ohdot\v8i\ms\plotting\PDF.pltcfg
34'' x 22''
Model: Sheet
Printed: 6/19/2018 @ 8:21:44 AM
File: N:\03\60\06634_2E\roadway\sheets\105322GS002.dgn
View: FENCE_VIEW1
By: jdouglas
ms consultants, inc.

PLOT.CEL

ms consultants, inc.
msconsultants.com

Ohio DOT Workspace
70\71 East Interchange 2E
www.msconsultants.com

0 0.5" 1"

Batchplot Spec: \\msconsultants.com\files\production\03\60\06634_2E\standards\plotdrv\batchplt.spc
Pen Table: N:\03\60\06634_2E\standards\tables\V8i_ms_std_06634_2D_Plan View_NoClouds.tbl
Plot Driver: \\msconsultants.com\files\production\03\60\06634_2E\standards\ustn\ohdot\v8i\ms\plotting\PDF.pltcfg
DGN: ohdot\V8i
MF: 60-06634_2E_Columbus

Model: Sheet
Printed: 2/12/2019 @ 10:40:53 AM
File: N:\03\60\06634_2E\roadway\sheets\05322605003.dgn
View: FENCE_VIEW1
By: dwhite

34" x 22"

ESTIMATED QUANTITY SHEET NO.

					202		202	202			202		202			SPECIAL			252	253			512	518	601	601	601	602	601	
					REMOVAL MISC.: TRENCH DRAIN REMOVED		REMOVAL MISC.: PRIVATE SIGN REMOVED	REMOVAL MISC.: GOAL POST REMOVED			REMOVAL MISC.: RAILROAD TIES REMOVED		REMOVAL MISC.: RUNNING TRACK REMOVED			PARKING BLOCK REMOVED			FULL DEPTH PAVEMENT SAWING	PAVEMENT REPAIR			SEALING OF CONCRETE SURFACES	6" NON-PERFORATED CORRUGATED PLASTIC PIPE, INCLUDING SPECIALS	CONCRETE SLOPE PROTECTION	TIED CONCRETE BLOCK MAT, TYPE 1	TIED CONCRETE BLOCK MAT, TYPE 2	CONCRETE MASONRY	RIPRAP, TYPE D, AS PER PLAN	
					FT		EACH	EACH			FT		SY			EACH			FT	CY			SY	FT	SY	SY	SY	CY	SY	
581																			312				198							
583																			114				749							
584																									200				10	
586																														
587																							1059		580					
589																							149							
590																													10	
592																							664		72					
593																														
595																							1066							
596																														
598																							778							
598A																									396	125	10			
600																			200				36							
601																									211			0.28		
603																			623				594							
604																									232					
606					110														384											
607																							429							
608																														
610																							1426							
611																											14		10	
613																			28											
614																							991				17			
615																								45						
617																							1118							
618																									41					
619																								14						
621																							2242							
622																									77					
623																														
625							1	1			173		2068										2452							
626																									121					
627																														
629																26							1632							
630																									68		154			
632							2												24				707							
633																														
634																														
636																			78				369							
637																				66					393					
639																			48				653							
640																														
641																				318									10	
643																			36				1032							
644																														
645																														
TOTALS CARRIED TO GENERAL SUMMARY	**0**	**0**	**0**	**0**	**110**	**0**	**3**	**1**	**0**	**0**	**173**	**0**	**2068**	**0**	**0**	**26**	**0**	**0**	**1847**	**384**	**0**	**0**	**18344**	**59**	**2391**	**125**	**195**	**0.28**	**40**	**0**

CALCULATED JAP
CHECKED HRB

ROADWAY SUB-SUMMARY - 2A

FRA-70-14.54

536
2317

ESTIMATED QUANTITY SHEET NO.	SPECIAL			252	253			512
	PARKING BLOCK REMOVED			FULL DEPTH PAVEMENT SAWING	PAVEMENT REPAIR			SEALING OF CONCRETE SURFACES
	EACH			FT	SY			SY
647								421
648								
650				1344	78			731
652				299	59			331
659				26				375
660								
662				39				
669				43				409
670								
717								
719				147				
720				267	22			
722								
723				75				
727	10			85				
728					96			
732				120				
TOTALS CARRIED TO GENERAL SUMMARY	10			2445	255			2267

CALCULATED JAP
CHECKED HRB

ROADWAY SUB-SUMMARY - 2B

FRA-70-14.54

ms consultants, inc.

PLOT.CEL
ms consultants, inc.
msconsultants.com
Ohio DOT Workspace
70\71 East Interchange 2E
www.msconsultants.com
Batchplot Spec: \\msconsultants.com\files\production\03\60\06634_2E\standards\plotdrv\batchplt.spc
Pen Table: N:\03\60\06634_2E\standards\tables\V8i_ms_std_06634_2D_Plan View_NoClouds.tbl
Plot Driver: \\msconsultants.com\files\Standards\ustn\ohdot\v8i\ms\plotting\PDF.pltcfg
34" x 22"
View: FENCE_VIEW1
By: awhite
Model: Sheet
Printed: 2/12/2019 @ 10:01:02 AM
File: N:\03\60\06634_2E\roadway\sheets\105322GS004.dgn

PLOT.CEL

ms consultants, inc.
msconsultants.com

Ohio DOT Workspace
70\71 East Interchange 2E
www.msconsultants.com

1" 0.5" 0

Batchplot Spec: \\msconsultants.com\files\production\03\60\06634_2E\standards\plotdrv\batchplt.spc
Pen Table: N:\03\60\06634_2E\standards\tables\V8i_ms_std_06634_2D_Plan View.tbl
Plot Driver: \\msconsultants.com\files\Standards\usrn\ohdot\v8i\ms\plotting\PDF.pltcfg
PCF: 60-06634_2E_Columbus
CF: ohdotV8i

34" x 22"

Model: Sheet
Printed: 8/1/2018 @ 2:04:47 PM
File: N:\03\60\06634_2E\roadway\sheets\1053226S005.dgn
View: FENCE_VIEW1
By: jdoughs

ESTIMATED QUANTITY SHEET NO.

	606		606	606	606	606	606	606		607				607	607	607		608			608			608	608		608		608	608	609	609	609				
	GUARDRAIL, TYPE MGS		ANCHOR ASSEMBLY, MGS TYPE E (MASH 2016)	ANCHOR ASSEMBLY REBUILT, MGS TYPE E	ANCHOR ASSEMBLY, MGS TYPE T	MGS BRIDGE TERMINAL ASSEMBLY, TYPE 1	MGS BRIDGE TERMINAL ASSEMBLY, TYPE 2	IMPACT ATTENUATOR, TYPE 1 (UNIDIRECTIONAL)		FENCE, TYPE CL				FENCE, TYPE CL, AS PER PLAN	GATE, TYPE CL, AS PER PLAN	GATE, TYPE CL		4" CONCRETE WALK			8" CONCRETE WALK			DETECTABLE WARNING, AS PER PLAN	WALKWAY, MISC.; COLUMBUS CURB RAMP, TYPE A, AS PER PLAN		WALKWAY, MISC.; COLUMBUS CURB RAMP, TYPE G, AS PER PLAN.		WALKWAY, MISC.; COLUMBUS CURB RAMP, TYPE P-6, AS PER PLAN	WALKWAY, MISC.; BRICK PAVER WALK, AS PER PLAN	CURB, TYPE 4-C	CURB, MISC.; COLUMBUS 18" CONCRETE CURB, AS PER PLAN	CURB, MISC.; STRAIGHT 18" GRANITE CURB, AS PER PLAN "A"				
	FT		EACH	EACH	EACH	EACH	EACH	EACH		FT				FT	EACH	EACH		SF			SF			SF	EACH		EACH		EACH	SF	FT	FT	FT				
581																																				
583																																				
584																																				
586																																				
587																																				
589																																				
590																																				
592	250				1	1	1																													
593																																				
595	538																																			
596																																				
598	150		3			3	1																								143					
598A																																				
600										153				148	2	1		2396			252											480				
601																																				
603	375		1																												44					
604																																				
606	513		4		1	2				74																					211					
607																																				
608																																				
610										261																										
611																																				
613																																				
614	50		1			1		1		537																										
615																																				
617																																				
618								1																												
619																																				
621								1																												
622																																				
623																																				
625	263		3			1																														
626										533																										
627																																				
629						2				449																										
630																																				
632										124																							958	128			
633																		2698			574			48	6				1097							
634																																				
636																		2176			479			32	2		1		1			1131				
637																																				
639																																				
640																		2287			480								4			614				
641																																				
643																		1850			141											654				
644																																				
645																																				
TOTALS CARRIED TO GENERAL SUMMARY	0	2139	0	12	0	2	10	2	3	0	2131	0	0	0	148	2	1		11407	0	0	1926	0	0	80	8	0	1	0	5	1097	398	3837	128	0	0	0	0

CALCULATED JAP
CHECKED HRB

ROADWAY SUB-SUMMARY - 3A

FRA-70-14.54

538
2317

ms consultants, inc.

PLOT.CEL

ms consultants, inc.
msconsultants.com

www.msconsultants.com

Ohio DOT Workspace
70\71 East Interchange 2E

ESTIMATED QUANTITY SHEET NO.						606 GUARDRAIL, TYPE MGS FT		608 MGS BRIDGE TERMINAL ASSEMBLY, TYPE 2 EACH		607 FENCE, TYPE CL FT								608 4" CONCRETE WALK SF	608 8" CONCRETE WALK SF				608 DETECTABLE WARNING, AS PER PLAN SF	608 WALKWAY, MISC.: COLUMBUS CURB RAMP, TYPE A, AS PER PLAN EACH					608 WALKWAY, MISC.: BRICK PAVER WALK, AS PER PLAN SF			609 CURB, MISC.: COLUMBUS 18" CONCRETE CURB, AS PER PLAN. FT	609 CURB, MISC.: STRAIGHT 18" GRANITE CURB, AS PER PLAN "A" FT	609 CURB, TYPE 4-C FT		609 CURB, MISC.: RESET EXISTING GRANITE CURB, AS PER PLAN FT
647																																				
648																																				
650										309																										
652																																		20		
659																																				
660																																				
662						38		1																										23		
669																																				
670																																				
717																																				
719																		2231	1620				16	2												
720										260																						144	398			
722																		6794	1607				72	9					1441							
723										311																						252	554			
727																		4014	88				32	4					1188				528			747
728																																				
732																																105				
734																							16	2					563							
TOTALS CARRIED TO GENERAL SUMMARY	**0**	**0**	**0**	**0**	**0**	**38**	**0**	**1**	**0**	**880**	**0**	**0**	**0**	**0**	**0**	**0**	**0**	**13039**	**3315**	**0**	**0**	**0**	**136**	**17**	**0**	**0**	**0**	**0**	**3192**	**0**	**0**	**501**	**1480**	**43**	**0**	**747**

CALCULATED JAP
CHECKED HRB

ROADWAY SUB-SUMMARY - 3B

FRA-70-14.54

ms consultants, inc.

Batchplot Spec: \\msconsultants.com\files\production\03\60\06634_2E\standards\plotdrv\batchplt.spc UCF: ohdotV8i
Pen Table: N:\03\60\06634_2E\standards\tables\V8i_ms_std_06634_2D_Plan View_NoClouds.tbl PCF: 60-06634_2E_Columbus
Plot Driver: \\msconsultants.com\files\Standards\ustn\ohdot\v8i\ms\plotting\PDF.pltcfg

34'' x 22''

Model: Sheet View: FENCE_VIEW1
Printed: 10/24/2018 @ 1:33:28 PM By: hbrendlinger
File: N:\03\60\06634_2E\roadway\sheets\105322GS006.dgn

PLOT.CEL

ms consultants, inc.
msconsultants.com

Ohio DOT Workspace
70\71 East Interchange 2E
www.msconsultants.com

0 0.5" 1"

Batchplot Spec: \\msconsultants.com\files\production\03\60\06634_2E\standards\plotdrv\batchplt.spc
Pen Table: \\msconsultants.com\files\Standards\usth\ohdot\V8\ms\plotting\pen\V8i_ms_std.tbl PCF: ohdotV8i
Plot Driver: \\msconsultants.com\files\Standards\usth\ohdot\v8i\ms\plotting\rPDF.pltcfg PCF: 60-06634_2E_Columbus

Model: Sheet
Printed: 1/10/2019 @ 3:49:58 PM View: SHEET
File: \\msconsultants.com\files\Production\03\60\06634_2E\roadway\sheets\v8i\06332603007.dgn By: ahall

34" x 22"

ESTIMATED QUANTITY SHEET NO.			611		611	611	611						611		611	611	611		611	611	611	611	611	611	611	611		611		611	611	611		611			
			6" CONDUIT, TYPE B		12" CONDUIT, TYPE B, AS PER PLAN	12" CONDUIT, TYPE C	12" CONDUIT, TYPE C, AS PER PLAN						CONDUIT, MISC.: 12" C900 PIPE, CLASS 150, DR18, TYPE B, AS PER PLAN		CONDUIT, MISC.: 8" C900 PIPE, CLASS 100, DR25, TYPE B	15" CONDUIT, TYPE B	15" CONDUIT, TYPE C		15" CONDUIT, TYPE F	18" CONDUIT, TYPE B, 706.02, AS PER PLAN	15" CONDUIT, TYPE B, 706.02, AS PER PLAN	CONDUIT, MISC.: 15" C900 PIPE, CLASS 100, DR 25, TYPE B	18" CONDUIT, TYPE B	18" CONDUIT, TYPE B, AS PER PLAN	18" CONDUIT, TYPE C	CONDUIT, MISC.: 18" C905 PIPE, CLASS 235, DR18, TYPE B, AS PER PLAN	21" CONDUIT, TYPE B	24" CONDUIT, TYPE B		22" X 34" CONDUIT, TYPE B, 706.04		30" CONDUIT, TYPE B	30" CONDUIT, TYPE C	36" CONDUIT, TYPE B		42" CONDUIT, TYPE B			
			FT		FT	FT	FT						FT		FT	FT	FT		FT	FT	FT	FT	FT	FT	FT	FT		FT		FT	FT	FT		FT			
581																																				
583																																				
584																										12										
586																																				
587																169																				
589																																				
590																75																				
592																																				
593			6													362																				
595																																				
596																	8																			
598																																				
598A						12										94	27		175				190													
600																																				
601					132											67	47						6													
603																																				
604																106	26																			
606																																				
607																																				
608																	31																	42	249	6	
610																																				
611																149										178								319			
613																																				
614																																				
615			19													269										79	461		123					82			
617																																				
618																																				
619			24													344	17						278				74									
621																																				
622																																				
623					4											98	518																			
625																																				
626																																				
627																870	68						75		31											
629																																				
630																238																				
632																																				
633																																				
634					391											164	16							123												
636																																				
637					438		37									801	166				8			147		95									228	
639																																				
640																																				
641					94									113		20				371		19	80			90									651	
643																																				
644																																				
645			25		187		52						212			165									100									375		
TOTALS CARRIED TO GENERAL SUMMARY			0	0	74	0	1246	12	89		0	0	0	212	0	113	3991	924		175	371	8	19	629	270	31	285	269	535	0	123		42	568	88	0	1254	0	0	0

CALCULATED JAP
CHECKED HRB

ROADWAY SUB-SUMMARY - 4A

FRA-70-14.54

540
2317

ms consultants, inc.

PLOT.CEL

ms consultants, inc.
msconsultants.com

www.msconsultants.com

Ohio DOT Workspace
70\71 East Interchange 2E

1" 0.5" 0

ODF: ohdot\V8i
PCF: 60-06634_2E_Columbus

34" x 22"

Batchplot Spec: \\msconsultants.com\files\production\03\60\06634_2E\standards\plotdr\batchplt.spc
Pen Table: N:\03\60\06634_2E\standards\tables\V8i_ms_std_06634_2D_Plan View.tbl
Plot Driver: \\msconsultants.com\files\Standards\ustn\ohdot\v8i\ms\plotting\PDF.pltcfg

Model: Sheet
Printed: 6/19/2018 @ 8:23:08 AM View: FENCE_VIEW1
File: N:\03\60\06634_2E\roadway\sheets\1053226S008.dgn By: jdoughas

CALCULATED JAP
CHECKED HRB

ROADWAY SUB-SUMMARY - 4B

ESTIMATED QUANTITY SHEET NO.	611 6" CONDUIT, TYPE B, AS PER PLAN FT	611 10" CONDUIT, TYPE B FT	611 12" CONDUIT, TYPE B FT	611 12" CONDUIT, TYPE C FT	611 15" CONDUIT, TYPE B FT	611 15" CONDUIT, TYPE B, 706.02 FT	611 15" CONDUIT, TYPE C FT	611 15" CONDUIT, TYPE F FT	611 18" CONDUIT, TYPE B FT	611 18" CONDUIT, TYPE C FT	611 18" CONDUIT, TYPE C, AS PER PLAN FT	611 24" CONDUIT, TYPE B FT	611 12" CONDUIT, TYPE B, AS PER PLAN FT	611 12" CONDUIT, TYPE C, AS PER PLAN FT	611 15" CONDUIT, TYPE B, AS PER PLAN FT	611 15" CONDUIT, TYPE C, AS PER PLAN FT	611 36" CONDUIT, TYPE B FT	611 18" CONDUIT, TYPE B, AS PER PLAN FT
647																		
648		93			66				126	14		37					55	
650				6	138	8	2	64										
652			8		81		7											
659																		
660					128													
662																		
669																		
670					98		6		94									
717																		
719																		
720													115	47	156			
722																		
723	55												145					165
727																		
728											164		203	14	31	7		62
732			110															
TOTALS CARRIED TO GENERAL SUMMARY	55	93	118	6	511	8	15	64	220	14	164	37	463	61	187	7	55	227

FRA-70-14.54

ms consultants, inc.

PLOT.CEL

ms consultants, inc.
rmsconsultants.com

www.rmsconsultants.com

Ohio DOT Workspace
70\71 East Interchange 2E

0 0.5" 1"

Batchplot Spec: \\rmsconsultants.com\Files\production\03\60\06634_2E\standards\plotdrv\batchplt.spc
Pen Table: \\rmsconsultants.com\Files\Standards\usth\ohdot\V8i\ms\plotting\pen\V8i_ms_std.tbl PCF: ohdotV8i
Plot Driver: \\rmsconsultants.com\Files\Standards\usth\ohdot\V8i\ms\plotting\PDF.pltcfg PCF: 60-06634_2E_Columbus

Model: Sheet
Printed: 2/15/2019 @ 11:54:35 AM
File: \\rmsconsultants.com\Files\Production\03\60\06634_2E\roadway\sheets\05322GS009.dgn
View: FENCE_VIEW1
By: hbreidinger

34" x 22"

ESTIMATED QUANTITY SHEET NO.

	503		611	611		611	611	611	611				611	611	611	611	611		611	611	611	611	611	611		611	611	611	611	611	611	839	839
	COFFERDAMS AND EXCAVATION BRACING, AS PER PLAN		CONDUIT, BORED OR JACKED, 748.06, 16"	CONDUIT MISC.: CONDUIT INSTALLED BY THE TRENCLESS METHOD, 60"		60" CONDUIT, TYPE B, 706.02	72" CONDUIT, TYPE B, 706.02	84" CONDUIT, TYPE B, 706.02	15" CONDUIT, TYPE C, 706.02				CATCH BASIN, NO. 3A	CATCH BASIN, NO. 5	CATCH BASIN, NO. 6	CATCH BASIN, NO. 6, AS PER PLAN	CATCH BASIN, NO. 8		INLET, NO. 3 FOR SINGLE SLOPE BARRIER, TYPE B	INLET, NO. 3 FOR SINGLE SLOPE BARRIER, TYPE B1	INLET, NO. 3 FOR SINGLE SLOPE BARRIER, TYPE C	INLET, NO. 3 FOR SINGLE SLOPE BARRIER, TYPE C, AS PER PLAN	INLET, NO. 3 FOR SINGLE SLOPE BARRIER, TYPE C1	INLET, NO. 3 FOR SINGLE SLOPE BARRIER, TYPE C1, AS PER PLAN "B"		INLET, NO. 3 FOR SINGLE SLOPE BARRIER, TYPE D	MANHOLE, NO. 3	MANHOLE, NO. 3, AS PER PLAN	MANHOLE, NO. 3, AS PER PLAN "A"	MANHOLE ADJUSTED TO GRADE	MANHOLE RECONSTRUCTED TO GRADE	MANHOLE RECONSTRUCTED TO GRADE, AS PER PLAN	JUNCTION CHAMBER, AS PER PLAN	TRENCH DRAIN WITH STANDARD GRATE, AS PER PLAN	TRENCH DRAIN WITH STANDARD GRATE
	LUMP		FT	FT		FT	FT	FT	FT				EACH	EACH	EACH	EACH	EACH		EACH	EACH	EACH	EACH	EACH	EACH		EACH	EACH	EACH	EACH	EACH	EACH	EACH	FT	FT
581																																		
583																																		
584																							1											
586																																		
587									7										1															
589																																		
590																							1											
592																																		
593																					1		1			2	1				1			267
595																																		
596							8	8																							1	1		
598																																		
598A													1				5										4			1				
600																																		
601			199																								1							
603																																		
604													1				1						1			1	1			2	1			
606																																		
607																																		
608																										1	3	1		1				
610																																		
611																	2			1			1				1	1						
613																																		
614																																		
615																	2			2			3			2		6	1					206
617																																		
618																																		
619																	1		1		2			1		2		1						166
621																																		
622																																		
623															1		1									1	3						11	
625																																		
626																																		
627	1			255		193											4					3				3	3	3				1		
629																																		
630																							1			2						1		
632																																		
633																																		
634																	2										1			1				
636																																		
637																	2											2		3	1			
639																																		
640																																		
641															1						1		1				1	3		3				
643																																		
644																																		
645																	1		1							2		2		1			130
TOTALS CARRIED TO GENERAL SUMMARY	1	0	199	255	0	193	8	8	7	0	0	0	2	0	1	1	21	0	3	2	5	3	9	2	0	16	19	19	1	8	5	5	1	11	769

CALCULATED JAP
CHECKED HRB

ROADWAY SUB-SUMMARY - 5A

FRA-70-14.54

542
2317

ms consultants, inc.

PLOT.CEL

ms consultants, inc.
msconsultants.com

Ohio DOT Workspace
70\71 East Interchange 2E
www.msconsultants.com

1"
0.5"
0

ODF: ohdot\V8i
PCF: 60-06634_2E_Columbus

Batchplot Spec: \\msconsultants.com\files\production\03\60\06634_2E\standards\plotdr\batchplt.spc
Pen Table: N:\03\60\06634_2E\standards\tables\V8i_ms_std_06634_2D_Plan View.tbl
Plot Driver: \\msconsultants.com\files\Standards\ustn\ohdot\v8i\ms\plotting\PDF.pltcfg

Model: Sheet
Printed: 3/27/2018 @ 11:29:52 AM
File: N:\03\60\06634_2E\roadway\sheets\1053220S010.dgn

View: FENCE_VIEW1
By: jdoughas

34" x 22"

ESTIMATED QUANTITY SHEET NO.	611	611	611	611	611	611	839	839
	15" CONDUIT, TYPE C, 706.02	CATCH BASIN, NO. 5	CATCH BASIN, NO. 8	CATCH BASIN, NO. 2-2B	INLET, NO. 3 FOR SINGLE SLOPE BARRIER, TYPE B1	INLET, NO. 3 FOR SINGLE SLOPE BARRIER, TYPE C	INLET, NO. 3 FOR SINGLE SLOPE BARRIER, TYPE C1	INLET, NO. 3 FOR SINGLE SLOPE BARRIER, TYPE D	MANHOLE, NO. 3	MANHOLE, NO. 3, AS PER PLAN	MANHOLE ADJUSTED TO GRADE	MANHOLE RECONSTRUCTED TO GRADE	TRENCH DRAIN WITH PEDESTRIAN GRATE	TRENCH DRAIN WITH STANDARD GRATE
	FT	EACH	EACH	EACH	EACH	EACH	EACH	EACH	EACH	EACH	EACH	EACH	FT	FT
647														
648			1		1			2	1	2				437
650	8		1				1							
652			1		2									
659														
660			1											
662														
669														
670			2					3	1					
717											1			
719														
720											2			
722														
723											5		7	
727														
728											1	3		
732		1												
TOTALS CARRIED TO GENERAL SUMMARY	8	1	6	0	3	0	1	5	2	2	9	3	7	437

CALCULATED JAP
CHECKED HRB

ROADWAY SUB-SUMMARY - 5B

FRA-70-14.54

543
2317

ms consultants, inc.

PLOT.CEL
ms consultants, inc.
msconsultants.com
Ohio DOT Workspace
70\71 East Interchange 2E
www.msconsultants.com
1"
0.5"
0
Batchplot Spec= \\msconsultants.com\files\production\03\60\06634_2E\standards\plotdrv\batchplt.spc
Pen Table= N:\03\60\06634_2E\standards\tables\V8i_ms_std_06634_2D_Plan View_NoClouds.tbl
Plot Driver= \\msconsultants.com\files\Standards\ustn\ohdot\v8i\ms\plotting\PDF.pltcfg
PDF: ohdot\V8i
PDF: 60-06634_2E_Columbus
34" x 22"
Model: Sheet
Printed: 10/24/2018 @ 1:33:38 PM
File= N:\03\60\06634_2E\roadway\sheets\05322GS01f.dgn
View= FENCE_VIEW1
By= hbrendinger

	613		618	622	622	622	622	622	622	622	622	622	622	622	622	622	622	622	622	622	622	622	622	622	622	622	622	626	626	626	626
	LOW STRENGTH MORTAR BACKFILL		EDGE LINE, RUMBLE STRIPE (ASPHALT CONCRETE)	CONCRETE BARRIER, SINGLE SLOPE, TYPE B	CONCRETE BARRIER, SINGLE SLOPE, TYPE B1	CONCRETE BARRIER, SINGLE SLOPE, TYPE C	CONCRETE BARRIER, SINGLE SLOPE, TYPE C, AS PER PLAN "A"	CONCRETE BARRIER, SINGLE SLOPE, TYPE C, AS PER PLAN "B"	CONCRETE BARRIER, SINGLE SLOPE, TYPE C1	CONCRETE BARRIER, SINGLE SLOPE, TYPE D	CONCRETE BARRIER, SINGLE SLOPE, TYPE D, AS PER PLAN "A"	CONCRETE BARRIER, SINGLE SLOPE, TYPE D, AS PER PLAN "B"	CONCRETE BARRIER, SINGLE SLOPE, TYPE D, AS PER PLAN "C"	CONCRETE BARRIER, SINGLE SLOPE, TYPE D, AS PER PLAN "D"	BARRIER TRANSITION	CONCRETE BARRIER END SECTION, TYPE C1, AS PER PLAN	CONCRETE BARRIER END SECTION, TYPE B	CONCRETE BARRIER END SECTION, TYPE D	CONCRETE BARRIER, END ANCHORAGE, REINFORCED, TYPE B	CONCRETE BARRIER, END ANCHORAGE, REINFORCED, TYPE B1	CONCRETE BARRIER, END ANCHORAGE, REINFORCED, TYPE C1, AS PER PLAN "B"	CONCRETE BARRIER, END ANCHORAGE, REINFORCED, TYPE C	CONCRETE BARRIER, END ANCHORAGE, REINFORCED, TYPE C, AS PER PLAN "A"		CONCRETE BARRIER, END ANCHORAGE, REINFORCED, TYPE C, AS PER PLAN "C"	CONCRETE BARRIER, END ANCHORAGE, REINFORCED, TYPE C1	CONCRETE BARRIER, END ANCHORAGE, REINFORCED, TYPE C1, AS PER PLAN "A"	CONCRETE BARRIER, END ANCHORAGE, REINFORCED, TYPE D	CONCRETE BARRIER, END ANCHORAGE, REINFORCED, TYPE D, AS PER PLAN	BARRIER, MISC.: NEW JERSEY STYLE, TYPE B50, AS PER PLAN	BARRIER REFLECTOR, TYPE 1, BI-DIRECTIONAL	BARRIER REFLECTOR, TYPE 1, ONE-WAY	BARRIER REFLECTOR, TYPE 2, ONE-WAY	BARRIER REFLECTOR, TYPE 2, BI-DIRECTIONAL
	CY		MILE	FT	FT	FT	FT	FT	FT	FT	FT	FT	FT	FT	FT	EACH	EACH	EACH	EACH	EACH	EACH	EACH	EACH	EACH		EACH	EACH	EACH	EACH	EACH	FT	EACH	EACH	EACH	EACH
581																														120	4			
583																																		
584				236	161				99							2					1					5					4	4		
586																																		
587				440	263				148											2	3					2					8	7		
589													151															1			2			
590																																		
592						29				365					170				2				2					2			12	2	6	2
593																																		
595						868		132		21													1					1			11	15		13
596																																		
598								98		589									4				2					3			12	7		11
598A																																		
600										20						1															1			
601																																		
603										554						1												4			11	5	5	5
604																																		
606			0.16																															13
607									152	125							1		1									2			13			
608																																		
610			0.18			188			425	385													3				3	1	7			33	4		
611																																		
613																																		
614			0.18			3			285	124								1	1				1				10		6			36	1		3
615																																		
617																																		
618				33		168			112	316										3			3				9		3			16			
619																																		
621																															1			
622					166	236	32		115	690	99	99	198			1					5		3				1		6			35	3		
623																																		
625																																		6
626	52				505	126				1402									1				8			1			10	3		44			
627																																		
629					287	39			126	761									2		3		5	3			1		10			37	3		2
630	68																																	
632									250																		2	2				16			
633																																		
634																																		
636																																		
637									115					95													4		1			15			
639																																		
640									118					330						1	1					1		1			13			
641																																		
643																																		
644					185	8			59	341	136										9		1						5			35			
645																																		
TOTALS CARRIED TO GENERAL SUMMARY	120	0	0.52	709	1567	1665	32	230	2004	5693	235	99	349	595	5	1	1	11	5	22	1	29	3		2	37	3	62	3	120	359	51	11	55

CALCULATED JAP
CHECKED HRB

ROADWAY SUB-SUMMARY - 6A

FRA-70-14.54

544
2317

PLOT.CEL

ms consultants, inc.
msconsultants.com

www.msconsultants.com
Ohio DOT Workspace
70\71 East Interchange 2E

1" 0.5" 0

Batchplot Spec: \\msconsultants.com\Files\production\03\60\06634_2E\standards\plotdrv\batchplt.spc
Pen Table: N:\03\60\06634_2E\standards\tables\V8i_ms_std_06634_2D_Plan View_NoClouds.tbl
Plot Driver: \\msconsultants.com\Files\Standards\ustn\ohdot\v8i\ms\plotting\PDF.pltcfg
PDF: ohdotV8i
PCF: 60-06634_2E_Columbus

Model: Sheet
Printed: 10/24/2018 @ 1:33:48 PM
File: N:\03\60\06634_2E\roadway\sheets\1053226302.dgn
View: FENCE_VIEW1
By: tlorendinger

34" x 22"

ESTIMATED QUANTITY SHEET NO.

		618	622		622		622		622				622		626	626	626		622	622				622	622		621			
		EDGE LINE, RUMBLE STRIPE (ASPHALT CONCRETE)	CONCRETE BARRIER, SINGLE SLOPE, TYPE B1		CONCRETE BARRIER, SINGLE SLOPE, TYPE C		CONCRETE BARRIER, SINGLE SLOPE, TYPE C1		CONCRETE BARRIER, SINGLE SLOPE, TYPE D				BARRIER TRANSITION		BARRIER REFLECTOR, TYPE 1, BI-DIRECTIONAL	BARRIER REFLECTOR, TYPE 1, ONE-WAY	BARRIER REFLECTOR, TYPE 2, BI-DIRECTIONAL		CONCRETE BARRIER, END ANCHORAGE, REINFORCED, TYPE B1	CONCRETE BARRIER, END ANCHORAGE, REINFORCED, TYPE C				CONCRETE BARRIER, END ANCHORAGE, REINFORCED, TYPE C1	CONCRETE BARRIER, END ANCHORAGE, REINFORCED, TYPE D		BARRIER, MISC.: NEW JERSEY STYLE, TYPE B50, AS PER PLAN			
		MILE	FT		FT		FT		FT				EACH		EACH	EACH	EACH		EACH	EACH				EACH	EACH		EACH			
647			126						20						17				6						5					
648																														
650		0.17					366		25						27									7						
652		0.10	161										1		16				4											
659					68				261							8				2					2					
660																														
662																	2													
669									281				1			7									6					
670																														
717																														
719																														
720																														
722																														
723																														
727																														
728																														
1327																2												80		
1331		0.44														65														
1332		0.02														3														
TOTALS CARRIED TO GENERAL SUMMARY		0.73	287		68		366		587				2		60	85	2		10	2				7	13					

CALCULATED JAP
CHECKED HRB

ROADWAY SUB-SUMMARY - 6B

FRA-70-14.54

ms consultants, inc.

PLOT.CEL
ms consultants, inc.
msconsultants.com
www.msconsultants.com
Ohio DOT Workspace
70\71 East Interchange 2E
0 0.5" 1"
DGF: ohdot\V8i
PCF: 60-06634_2E_Columbus
Batchplot Spec: \\msconsultants.com\files\production\Q3\60\06634_2E\standards\plotdr\batchplt.spc
Pen Table: N:\Q3\60\06634_2E\standards\tables\V8i_ms_std_06634_2D_Plan View.tbl
Plot Driver: \\msconsultants.com\files\Standards\usen\ohdot\v8i\ms\plotting\PDF.pltcfg
Model: Sheet
Printed: 6/19/2018 @ 8:24:18 AM
File: N:\Q3\60\06634_2E\roadway\sheets\1053226SD13.dgn
View: FENCE_VIEW1
By: jdoughs
34" x 22"

ESTIMATED QUANTITY SHEET NO.						653	670				SPECIAL	SPECIAL		SPECIAL		SPECIAL		638											SPECIAL	SPECIAL		
						TOPSOIL FURNISHED AND PLACED	DITCH EROSION PROTECTION MAT, TYPE B				INLET, MISC.; CITY OF COLUMBUS 60" CURB INLET	INLET, MISC.; CITY OF COLUMBUS STANDARD CURB AND GUTTER INLET		INLET, MISC.; CITY OF COLUMBUS DOUBLE CURB AND GUTTER INLET		MANHOLE, MISC.; CITY OF COLUMBUS, MANHOLE, TYPE C		WATER WORK, MISC.; HEAVY DUTY VALVE BOX ADJUSTED TO GRADE (COL. 807)										GRASS PAVEMENT SYSTEM	BOLLARD		
						CY	SY				EACH	EACH		EACH		EACH		EACH										SY	EACH		
581																																
583																																
584																																
586																																
587							70																									
589																																
590																																
592																																
593																																
595																																
596																																
598																																
598A							365																									
600																													113			
601							81				2	1		2																16		
603																																
604							509																									
606																																
607							518																									
608																																
610																																
611							521																									
613																																
614							198																									
615																																
617																																
618							52																									
619																																
621																																
622							122																									
623																																
625																																
626							789																									
627																																
629																																
630							330																									
632						68																										
633							200																									
634														7																		
636						115																										
637							293							10		4																
639																		3														
640							30																									
641														5		5																
643																																
644							125																									
645											3			6		5																
TOTALS CARRIED TO GENERAL SUMMARY						183	4203				5	1		30		14		3										113	16		

CALCULATED JAP
CHECKED HRB

ROADWAY SUB-SUMMARY - 7A

FRA-70-14.54

546
2317

PLOT.CEL

ms consultants, inc.
msconsultants.com

Ohio DOT Workspace
70\71 East Interchange 2E
www.msconsultants.com

1" 0.5" 0

Batchplot Spec: \\msconsultants.com\Files\Production\03\60\06634_2E\standards\oldtr\batchplt.SPC
Pen Table: \\msconsultants.com\Files\Standards\astm\ohdot\V8i\ms\plotting\pen\V8i_ms_std.TBL PCF: ohdot\V8i
Plot Driver: \\msconsultants.com\Files\Standards\astm\ohdot\V8i\ms\plotting\PDF.pltcfg PCF: 60-06634_2E_Columbus

Model: Sheet
Printed: 1/8/2019 @ 3:38:05 PM View: SHEET
File: \\msconsultants.com\Files\Production\03\60\06634_2E\roadway\sheets\D53220GS014.dgn By: dhall

34" x 22"

ESTIMATED QUANTITY SHEET NO.				SPECIAL	638		670				SPECIAL	SPECIAL	SPECIAL	SPECIAL	SPECIAL	SPECIAL			SPECIAL	SPECIAL												
				HEAVY DUTY VALVE BOX ADJUSTED TO GRADE (COL. 807)	FIRE HYDRANT ADJUSTED TO GRADE		DITCH EROSION PROTECTION MAT, TYPE B				INLET, MISC.: CITY OF COLUMBUS 60" CURB INLET FOR GRANITE CURBING	INLET, MISC.: CITY OF COLUMBUS STANDARD CURB AND GUTTER INLET	INLET, MISC.: CITY OF COLUMBUS STANDARD CURB AND GUTTER INLET FOR GRANITE CURBING	INLET, MISC.: CITY OF COLUMBUS DOUBLE CURB AND GUTTER INLET	INLET, MISC.: CITY OF COLUMBUS DOUBLE CURB AND GUTTER INLET FOR GRANITE CURBING	MANHOLE, MISC.: CITY OF COLUMBUS, MANHOLE, TYPE C			MANHOLE, MISC.: MANHOLE REHABILITATION	CONDUIT, MISC.: 12" CHECK VALVE, AS PER PLAN											
				EACH	EACH		SY				EACH	EACH	EACH	EACH	EACH	EACH			EACH	EACH												
647							376																									
648																																
650							724																									
652							191																									
659																																
660							227																									
662																																
669							457																									
670																																
717				4																												
719				7	1																											
720												1		1	2	2			1	1												
722				9																												
723											1		2	3	1	2																
727																																
728													2		3	5			1													
732														1																		
TOTALS CARRIED TO GENERAL SUMMARY				20	1		1975				1	1	4	5	6	9			2	1												

CALCULATED JAP
CHECKED HRB

ROADWAY SUB-SUMMARY - 7B

FRA-70-14.54

547
2317

ms consultants, inc.

PLOT.CEL
ms consultants, inc.
msconsultants.com
www.msconsultants.com
Ohio DOT Workspace
70\71 East Interchange 2E
0 0.5" 1"
Batchplot Spec: \\msconsultants.com\files\production\03\60\06634_2E\standards\oldot\batchplt.586
Pen Table: \\msconsultants.com\files\Standards\astm\ohdot\V8i\ms\plotting\pen\V8i_ms_std.tbl
Plot Driver: \\msconsultants.com\files\Standards\astm\ohdot\v8i\ms\plotting\PDF.pltcfg
34" x 22"
Model: Sheet
Printed: 1/17/2019 @ 10:18:50 AM
File: \\msconsultants.com\files\Production\03\60\06634_2E\drainage\sheets\06322005001.dgn
View: SHEET
By: dhall
PDF: ohdot\V8i
PDF: 60-06634_2E_Columbus

REF NO.	LOCATION	STATION FROM	STATION TO	SIDE	SHEET NO.	UNDERDRAIN OUTLET ELEV.	UNDERDRAIN OUTLET STA.	UNDERDRAIN OUTLET TYPE		611 4" CONDUIT, TYPE F FOR UNDERDRAIN PIPE OUTLET FT		605 4" BASE PIPE UNDERDRAIN * (18" DEPTH) FT	605 4" SHALLOW PIPE UNDERDRAIN (24" DEPTH) FT	605 4" DEEP PIPE UNDERDRAIN * (60" DEPTH) FT	605 4" UNCLASSIFIED PIPE UNDERDRAIN FT		STANDARD BENDS AND BRANCHES FOR INFORMATION ONLY: END CAP EA	4" X 4" 45° WYE EA	4" X 6" 45° WYE EA	4" X 4" TEE EA	4" X 4" 90° EA		4 X 4" 45° EA
U1	I-70 EB TRANS	857+00	585+47	LT	582	MATCH EX.	857+00	EX. UD					156				1			1	1		
U2	I-70 EB TRANS	858+47	865+00	LT	582/585	733.48	858+47	I-3-C1		10			648				1			1			
U3	I-70 EB TRANS	859+08	865+00	RT	582/585	MATCH PROP.	859+08	U5					592				1						
U4	I-70 EB TRANS	859+08	865+25	RT	582/585	MATCH PROP.	859+08	U5					615				1						
U5	70 EB TRANS/RAMP N1 TRANS	859+08	965+00	LT/RT	582/585	MATCH PROP.	859+08	U2					643				1			2			
U6	70 EB TRANS/RAMP N1 TRANS	858+51	964+87	RT	582/585	735.53	858+51	EX. CB		10		622					1						
U7	I-70 EB TRANS	865+05	866+25	LT	585/616	735.95	866+25	I-3-D		10			109				1						
U8	I-70 EB TRANS	865+05	866+25	LT/RT	585/616	735.95	866+25	I-3-D		10			132				1			1	2		
U9	I-70 EB TRANS	866+25	866+96	LT	616	735.95	866+25	I-3-D		10			59				1						
U10	I-70 EB TRANS	866+25	866+96	LT	616	MATCH PROP.	866+25	U8					71				1						
U11	I-70 EB TRANS/RAMP N4	865+30	773+42	RT	585/616	MATCH PROP.	773+42	U15					169				1						
U12	I-70 EB TRANS/RAMP N4	865+01	773+43	RT	585/616	MATCH PROP.	773+43	U15				198					1						
U13	I-70 EB TRANS/RAMP N4	765+03	773+43	RT	585/616	MATCH PROP.	773+43	U15					198				1						
U14	RAMP N1 TRANS	964+90	966+58	RT	585/616	738.87	966+58	I-3-B		10			157				1						
U15	RAMP N4	767+01	774+93	RT	616/620	739.97	767+14	MH-3		10			845				1			4	1		
U16	RAMP N4	773+42	777+90	LT	616/620	MATCH PROP.	773+42	U15					448				1						
U17	RAMP N4	773+42	777+91	RT	616/620	MATCH PROP.	773+42	U15					448				1						
U18	RAMP N4	773+56	775+09	RT	616	MATCH PROP.	773+56	U15					142				1						
U19	RAMP N1 TRANS	966+58	967+09	RT	616	738.90	967+09	I-3-D		10			47				1						
U20	RAMP N1	867+09	869+08	RT	616	738.90	867+09	I-3-D		10			186				1			1			
U21	RAMP N1	867+21	875+35	RT	616/620	MATCH PROP.	867+21	U20					821				1			1			
U22	RAMP N1	869+14	874+69	LT	616/620	740.55	869+14	I-3-C		10			552				1				2		
U23	RAMP N1	869+08	873+10	RT	616/620	739.65	869+08	I-3-D		10			388				1						
U24	RAMP N4	777+94	782+94	RT	620/624	745.52	777+94	I-3-C		10			494				1				2		
U25	RAMP N4	777+94	782+25	LT/RT	620	745.52	777+94	I-3-C		10			467				1			2	3		
U26	RAMP N4	777+95	782+70	RT	620/624	MATCH PROP.	777+95	U25					488				1				2		
U27	RAMP N1	873+10	876+45	RT	620/624	754.23	873+10	I-3-D		10		588					1						
U28	RAMP N4	779+54	782+25	LT	620	MATCH PROP.	779+54	U25				296					1				3		
U29	I-70 EB	773+29	774+92	RT	620	MATCH PROP.	773+29	U15				216					1				1		
U30	I-70 EB	774+98	779+57	RT	620/624	759.23	774+98	CB-6		10			460				1				1		
U31	I-70 EB	774+98	779+07	RT	620/624	760.23	774+98	CB-6		10		400					1				2		
U32	RAMP N4	782+30	785+52	LT	620/624	752.39	785+52	I-3-D		10		314					1			1	2		
U33	RAMP N4	782+30	785+52	LT	620/624	751.39	785+52	I-3-D		10			321				1			1			
U34	RAMP N4/RAMP N4 TRANS	785+53	693+25	LT/RT	597/624/628/661	MATCH PROP.	785+53	U33					776				1						2
U35	RAMP N4	782+75	784+53	RT	624	753.09	784+53	MH-3		10			181				1				1		
U36	RAMP N4	782+99	785+52	RT	624	754.32	785+52	I-3-D		10			248				1						
U37	RAMP N4	785+52	788+49	RT	624/628	754.32	785+52	I-3-D		10			295				1						
U38	RAMP N2	783+52	786+50	LT	624	764.66	786+50	MH-3		10		281					1						
U39	RAMP N2	783+52	786+50	LT	624	763.66	786+50	MH-3		10			287				1						
U40	RAMP N3	874+80	879+35	RT	620/624	770.62	879+35	I-3-D		10			450				1						
	*- UNLESS OTHERWISE CALLED OUT IN TYPICAL SECTION																						
	TOTALS CARRIED TO GENERAL SUMMARY								0	240	0	2915	11893	0	0	0	40						

CALCULATED
CHECKED

UNDERDRAIN SUBSUMMARY

FRA-70-14.54

548
2317

PLOT.CEL

ms consultants, inc.
msconsultants.com

www.msconsultants.com
Ohio DOT Workspace
70\71 East Interchange 2E

0 1" 0.5"

DGN: ohdot\V8i
PDF: 60-06634_2E_Columbus

Batchplot Spec: \\msconsultants.com\Files\Production\03\60\06634_2E\standards\ohdot\batchplt.spc
Pen Table: \\msconsultants.com\Files\Standards\astm\ohdot\V8i\ms\plotting\pen\V8i_ms_std.tbl
Plot Driver: \\msconsultants.com\Files\Standards\astm\ohdot\v8i\ms\plotting\PDF.pltcfg

34" x 22"

View: SHEET
By: dhall

Model: Sheet
Printed: 1/11/2019 @ 10:31:06 AM
File: \\msconsultants.com\Files\Production\03\60\06634_2E\drainage\sheets\053222S0002.dgn

REF NO.	LOCATION	STATION FROM	STATION TO	SIDE	SHEET NO.	UNDERDRAIN OUTLET ELEV.	UNDERDRAIN OUTLET STA.	UNDERDRAIN OUTLET TYPE		611 4" CONDUIT, TYPE F FOR UNDERDRAIN PIPE OUTLET FT		605 4" BASE PIPE UNDERDRAIN (18" DEPTH) * FT	605 4" SHALLOW PIPE UNDERDRAIN (24" DEPTH) FT	605 4" DEEP PIPE UNDERDRAIN (60" DEPTH) * FT	605 4" UNCLASSIFIED PIPE UNDERDRAIN FT		STANDARD BENDS AND BRANCHES FOR INFORMATION ONLY: END CAP EA	4" X 4" 45° WYE EA	4" X 6" 45° WYE EA	4" X 4" TEE EA	4" X 4" 90° EA		4 X 4" 45° EA
U41	RAMP N3	874+79	876+35	LT	620/624	761.66	874+79	MH-3		10			154				1			1			
U42	RAMP N3	875+36	876+40	LT	620/624	MATCH PROP.	875+36	U41					115				1				1		
U43	RAMP N3	876+47	882+84	LT	624/628	767.90	876+47	MH-3		10			641				1			1			
U44	RAMP N3	876+51	882+84	LT	624/628	MATCH PROP.	876+51	U43					658				1				1		
U45	RAMP N1	876+55	883+00	RT	624/628	766.76	876+55	CB-8		10			654				1						
U46	RAMP N3	875+92	879+30	LT	620/624	MATCH PROP.	879+30	U47					332				1				1		
U47	RAMP N3	877+98	879+35	LT	624	769.12	879+35	MH-3		10			121				1			1			
U48	RAMP N3	879+35	886+07	LT	624/628	769.12	879+35	MH-3		10			659				1			1			
U49	RAMP N3	879+40	882+19	LT	624/628	MATCH PROP.	879+40	U48					277				1				1		
U50	RAMP N3	879+35	880+00	RT	624	770.62	879+35	I-3-D		10			54				1						
U51	RAMP N3	880+05	881+44	RT	628	770.99	880+05	I-3-D		10			130				1						
U52	RAMP N3	881+59	887+19	RT	628/631/726	774.11	881+59	I-3-D		10		465	101				1				2		
U53	RAMP N1	883+18	884+27	LT	628	774.95	884+27	EX MH		10			98				1						
U54	RAMP N1	883+13	884+27	LT/RT	628	MATCH PROP.	884+27	U55					146				1				1		
U55	RAMP N1	883+05	884+34	RT	628	775.16	884+34	I-3-D		10			119				1			1			
U56	RAMP N1	884+32	886+86	LT	628/631	770.49	886+86	MH-3		10			257				1			1			
U57	RAMP N1	884+32	886+85	LT/RT	628/631/726	766.94	886+85	CB-8		10			313				1			3			
U58	RAMP N1	884+40	886+85	RT	628/631/726	MATCH PROP.	886+85	U57					256				1				2		
U59	RAMP N1	886+85	887+22	LT	631	MATCH PROP.	886+85	U57					36				1						
U60	RAMP N1	886+85	887+61	LT	631/726	MATCH PROP.	886+85	U56					78				1						
U61	RAMP N1	886+85	887+48	RT	631/726	MATCH PROP.	886+85	U57					70				1						
U62	I-70 WB	769+04	769+49	LT	588	MATCH EX.	769+04	EX. UD					58				1			1	2		
U63	I-70 WB	769+04	769+49	LT	588/616	MATCH PROP.	769+04	U62					45				1						
U64	I-70 WB	769+50	772+93	LT	588/591	740.82	769+50	I-3-C		10			357				1			1	1		
U65	I-70 WB	769+50	775+15	LT	588/591/616	MATCH PROP.	769+50	U64					565				1						
U66	I-70 WB	769+50	775+11	RT	588/591/616/620	741.82	769+50	I-3-C		10		550					1						
U67	I-70 WB	769+50	775+12	RT	588/616/620	740.82	769+50	I-3-C		10			570				1				1		
U68	I-71 SB TRANS	969+25	972+44	LT/RT	588/591	738.45	969+25	EX. INLET		10			353				1			2	1		
U69	I-71 SB TRANS	969+25	975+32	LT	588/591	MATCH PROP.	969+25	U69					606				1						
U70	I-71 SB TRANS	969+25	975+32	LT	588/591	MATCH PROP.	969+25	U69					605				1						
U71	I-70 WB TRANS	672+52	675+49	LT	591	749.63	672+52	CB-6		10			285				1						2
U72	I-70 WB TRANS	672+52	677+76	LT	591/594	749.63	672+52	CB-6		10			514				1						2
U73	I-71 SB TRANS	975+34	979+99	LT	591/594	558.40	975+34	I-3-D		10			448				1						
U74	I-71 SB TRANS	975+34	979+99	LT	591/594	558.40	975+34	I-3-D		10			455				1						
U75	I-71 SB TRANS	975+45	980+01	RT	591/594	760.34	975+45	I-3-C		10			449				1						
U76	I-70 WB TRANS	675+14	677+76	RT	591/594/620	659.61	675+14	I-3-C		10			261				1				1		
U77	I-70 EB	775+17	780+15	RT	620/624	659.61	775+17	I-3-C1		10			499				1				1		
U78	I-70 WB TRANS	677+77	682+81	LT	594/597	768.65	677+77	EX. MH		10			556				1			1	1		
U79	I-70 WB TRANS	677+77	681+82	RT	594/597	MATCH PROP.	677+77	U78					440				1			1			
U80	I-70 WB TRANS	679+02	682+05	RT	594/597	MATCH PROP.	679+02	U79					341										
	TOTALS CARRIED TO GENERAL SUMMARY									0	240	0	1015	12676	0	0	0	39						

*- UNLESS OTHERWISE CALLED OUT IN TYPICAL SECTION

CALCULATED

CHECKED

UNDERDRAIN SUBSUMMARY

FRA-70-14.54

549
2317

ms consultants, inc.

UNDERDRAIN SUBSUMMARY

REF NO.	LOCATION	STATION FROM	STATION TO	SIDE	SHEET NO.	UNDERDRAIN OUTLET ELEV.	UNDERDRAIN OUTLET STA.	UNDERDRAIN OUTLET TYPE	611 PRECAST REINFORCED CONCRETE OUTLET (EA)	611 4" CONDUIT, TYPE F FOR UNDERDRAIN PIPE OUTLET (FT)		605 4" BASE PIPE UNDERDRAIN (18" DEPTH) * (FT)	605 4" SHALLOW PIPE UNDERDRAIN (24" DEPTH) (FT)	605 4" DEEP PIPE UNDERDRAIN (60" DEPTH) * (FT)	605 4" UNCLASSIFIED PIPE UNDERDRAIN (FT)		STANDARD BENDS AND BRANCHES FOR INFORMATION ONLY: END CAP (EA)	4" X 4" 45° WYE (EA)	4" X 6" 45° WYE (EA)	4" X 4" TEE (EA)	4" X 4" 90° (EA)		4 X 4" 45° (EA)
U81	I-71 SB TRANS	980+03	988+81	LT	594/597/658/668	749.06	988+81	I-3-D		10			839				1				2		
U82	I-71 SB TRANS	980+03	989+31	LT	594/597/668	MATCH PROP.	989+31	U83					915				1						
U83	I-71 SB TRANS	980+02	989+31	RT	594/597/668	748.16	989+31	I-3-D		10			975				1			3			2
U84	I-71 SB TRANS	988+82	989+31	LT	668	748.16	989+31	I-3-D		10			38				1						
U85	I-71 SB TRANS	989+31	989+80	LT	668	748.16	989+31	I-3-D		10			38				1						
U86	I-71 SB TRANS	989+31	991+25	LT	668	MATCH PROP.	989+31	U83					194				1						1
U87	I-71 SB TRANS	989+31	991+25	RT	668	MATCH PROP.	989+31	U83					198				1						3
U88	I-71 SB TRANS	989+81	991+25	LT	668	749.36	989+81	I-3-D		10			131				1						
U89	RAMP N4/RAMP N4 TRANS	785+52	693+25	LT	597/624/628	MATCH PROP.	785+52	U32				757					1						2
U90	RAMP N4/RAMP N4 TRANS	789+90	690+35	LT	597/661	MATCH PROP.	789+90	U34					48				1						2
U91	RAMP N4/RAMP N4 TRANS	693+25	693+25	RT	597/661	MATCH PROP.	690+07	U34				327					1						1
U92	RAMP N2	786+58	787+65	LT	624	758.07	787+65	MH-3		10		99					1						
U93	NOT USED																						
U94	NOT USED																						
U95	RAMP N2	788+00	791+07	LT	597/624/628	757.51	788+00	CB-8		10			311				1				2		
U96	RAMP N2	785+28	789+20	RT	624/628	760.19	789+20	I-3-D		10			382				1						
U97	RAMP N2	789+20	791+06	RT	597/628	760.19	789+20	I-3-D		10			185				1						
U98	I-70 EB	782+85	787+09	RT	628/631	777.45	782+85	DITCH	1				479				1			2	1		
U99	I-70 EB	782+85	786+38	RT	628/631	MATCH PROP.	782+85	U98				347					1						
U100	I-70 EB	783+27	787+11	RT	628/631	MATCH PROP.	783+27	U98					407				1				1		
U101	I-70 EB	784+50	787+53	RT	599/628/631	793.54	784+50	I-3-C1		10		515					1						
U102	PARSONS	179+68	181+21	LT	631/726	774.74	181+21	CB-3A		10		142					1						
U103	PARSONS	181+25	182+39	LT	631/726	772.39	182+39	CB-3A		10		104					1						
U104	PARSONS	179+68	182+39	LT	631/726	772.39	182+39	CB-3A		10		296					1				1		
U105	PARSONS	179+68	182+42	RT	631/726	MATCH PROP.	182+42	U108				302					1				1		
U106	PARSONS	179+68	181+20	RT	726	774.87	181+20	CB-3		10		141					1						
U107	PARSONS	181+26	181+88	RT	726	773.52	181+88	CB-3		10		50					1						
U108	PARSONS	181+93	182+58	RT	631/726	772.13	182+58	CB-3		10		54					1						
U109	PARSONS/MOOBERRY	182+63	888+82	RT	631/726	770.25	888+82	CB-3		10		80					1						
U110	PARSONS	183+36	184+54	LT	631/726	769.98	184+54	CB-3		10		108					1						
U111	PARSONS	183+67	184+54	RT	631/726	769.98	184+54	CB-3		10		79					1						
U112	PARSONS	184+54	185+01	LT	599/631	769.98	184+54	CB-3		10		23					1						
U113	PARSONS	185+07	185+37	RT	599	770.15	185+07	CB-3A		10		18					1						
U114	TRANS PARSONS	85+40	86+52	LT	599	769.36	86+52	I-2-6		10		101					1						
U115	PARSONS/TRANS PARSONS	185+01	85+40	LT	599	770.10	185+01	CB-3		10		32					1						
U116	TRANS PARSONS	86+90	86+52	LT	599	769.36	86+52	I-2-6		10		27					1						
U117	TRANS PARSONS	85+40	86+56	RT	599	769.36	86+52	I-2-6		10		97					1						
U118	PARSONS	184+54	185+07	RT	599/631	769.98	184+54	CB-3		10		36					1						
U119	TRANS PARSONS	86+90	86+52	RT	599	769.36	86+52	I-2-6		10		26					1						
U120	MOOBERRY/PARSONS	888+82	183+63	LT/RT	631	770.08	888+82	CB-3		10		42					1						
U121	PARSONS	182+39	182+53	LT	631/726	772.39	182+39	CB-3A		10		4					1						
	* - UNLESS OTHERWISE CALLED OUT IN TYPICAL SECTION																						
	TOTALS CARRIED TO GENERAL SUMMARY								1	290	0	3807	5140	0	0	0	39						

FRA-70-14.54

550
2317

CALCULATED CHECKED

ms consultants, inc.
msconsultants.com

Ohio DOT Workspace 70\71 East Interchange 2E
Model: Sheet View: SHEET
Printed: 1/11/2019 @ 10:42:37 AM By: dhall
File: \\msconsultants.com\files\Production\03\60\06634_2E\drainage\sheets\105322DS003.dgn

34" x 22"

PLOT.CEL

ms consultants, inc.
msconsultants.com

www.msconsultants.com
Ohio DOT Workspace
70\71 East Interchange 2E

0 0.5" 1"

Batchplot Spec: \\msconsultants.com\files\production\03\60\06634.2E\standards\olotdr\batchplt.SPC
Pen Table: \\msconsultants.com\files\Standards\usth\ohdot\V8i\ms\plotting\pen\V8i_ms_std.TBL
Plot Driver: \\msconsultants.com\files\Standards\usth\ohdot\v8i\ms\plotting\PDF.pltcfg
PDF: ohdotV8i
PDF: 60-06634_2E_Columbus

34" x 22"

Model: Sheet
Printed: 1/11/2019 @ 10:54:46 AM
File: \\msconsultants.com\files\Production\03\60\06634.2E\drainage\sheets\10532205005.dgn
View: SHEET
By: dhall

REF NO.	LOCATION	STATION FROM	STATION TO	SIDE	SHEET NO.	UNDERDRAIN OUTLET ELEV.	UNDERDRAIN OUTLET STA.	UNDERDRAIN OUTLET TYPE		611 4" CONDUIT, TYPE F FOR UNDERDRAIN PIPE OUTLET FT		605 4" BASE PIPE UNDERDRAIN (12" DEPTH) * FT	605 4" BASE PIPE UNDERDRAIN (18" DEPTH) * FT	605 4" SHALLOW PIPE UNDERDRAIN (24" DEPTH) FT	605 4" DEEP PIPE UNDERDRAIN (60" DEPTH) * FT	605 4" UNCLASSIFIED PIPE UNDERDRAIN FT		STANDARD BENDS AND BRANCHES FOR INFORMATION ONLY: END CAP EA	4" X 4" 45° WYE EA	4" X 6" 45° WYE EA	4" X 4" TEE EA	4" X 4" 90° EA	6" X 4" REDUCER EA	4 X 4" 45° EA
U122-U199	NOT USED																							
U200	RAMP P2 TRANS	793+00	794+58	LT	602	785.23	794+58	I-3-D		10		148						1						
U201	RAMP P2 TRANS	794+59	797+50	LT	605	780.71	797+50	I-3-D		10		290						1						
U202	RAMP P2 TRANS/I-70 WB TRANS	797+50	230+02	LT	605/609	MATCH PROP.	230+02	U204				698						1						
U203	RAMP P2 TRANS	795+50	797+50	LT	602/605	779.71	797+50	I-3-D		10				203				1						1
U204	RAMP P2 TRANS/I-70 WB TRANS	797+50	230+02	LT	605/609	764.74	230+02	CB-8		10				704				1	2		1	1		
U205	RAMP P2 TRANS	793+00	795+59	RT	602	MATCH PROP.	795+59	U207				260						1						
U206	RAMP P2 TRANS	795+63	797+43	RT	602/605	MATCH PROP.	797+61	U203						200								1		1
U207	I-70 WB TRANS	219+50	221+23	LT	602	MATCH PROP.	221+23	U206				177						1	1					1
U208	I-70 WB TRANS	223+12	226+40	LT	605	MATCH PROP.	226+40	U204						331										1
U209	I-70 WB TRANS	226+27	229+51	LT	605/609	MATCH PROP.	229+51	U204						329				1						1
U210	NOT USED																							
U211	NOT USED																							
U212	I-70 WB TRANS	230+07	231+76	LT	609	764.45	231+76	I-3-C		10		169						1						1
U213	I-70 WB TRANS	230+07	232+56	LT	609/612/642	760.36	232+56	MH-3		10				257				1			1			
U214	I-70 WB TRANS	231+83	232+56	LT	612/642	761.36	232+56	MH-3		10		73						1						1
U215	I-70 WB TRANS	232+56	233+46	LT	612	MATCH PROP.	232+56	U213						90				1						
U216	I-70 WB TRANS	232+56	235+00	LT	612	760.36	232+56	MH-3		10				245				1	1					
U217	I-70 WB TRANS	234+52	239+50	LT/RT	649	MATCH PROP.	234+52	U216						511				1						1
U218	I-70 WB TRANS/RAMP P2 TRANS	62+50	240+80	LT	612/649	764.22	62+50	MH-3		10		241						1						
U219	I-70 WB TRANS	240+80	243+82	LT	649	767.14	243+82	CB-8		10		301						1						1
U220	I-70 WB TRANS	219+50	222+39	RT	602/605	MATCH PROP.	222+39	U219						294				1						1
U221	I-70 WB TRANS	219+50	228+89	RT	602/605/609	769.32	228+89	I-3-C		10		940						1	1					
U222	I-70 WB TRANS	228+91	229+40	RT	609	MATCH PROP.	229+40	U244		10		49						1				1		
U223	I-71 NB TRANS	795+71	797+36	LT	602/605	MATCH EX.	795+71	EX. UD				163						1			1			
U224	I-71 NB TRANS	795+71	797+36	LT	602/605	MATCH EX.	795+71	U223						164				1					1	
U225	I-71 NB TRANS	797+36	800+26	LT	605	MATCH PROP.	800+26	U229				286						1						
U226	I-71 NB TRANS	797+36	800+26	LT	605	MATCH PROP.	800+26	U230						292				1						2
U227	NOT USED																							
U228	I-71 NB TRANS	797+52	800+26	RT	605	MATCH PROP.	800+26	U235				277						1						
U229	RAMP P2	900+26	903+50	LT	605/609	MATCH PROP.	903+50	U230				324												
U230	RAMP P2	900+26	903+50	LT	605/609	765.69	903+50	CB-8		10				346							1	1		
U231	RAMP P2	903+55	907+24	LT	609/612	764.20	907+24	I-3-D		10		371						1				2		
U232	RAMP P2	903+55	907+24	LT	609/612	761.87	907+24	MH-3		10				368				1						1
U233	NOT USED																							
U234	NOT USED																							
U235	RAMP P2	900+26	906+00	RT	609	763.45	906+00	I-3-C		10				580								1		
U236	RAMP P2/RAMP P2 TRANS	907+24	57+86	LT	612	764.20	907+24	I-3-D		10		52						1						
U237	RAMP P2/RAMP P2 TRANS	907+24	63+72	LT	612/649	761.87	907+24	MH-3		10				635				1						
U238	RAMP P2 TRANS	57+87	62+50	LT	649	764.61	57+87	I-3-D		10		452												2
U239	I-71 SB TRANS	214+57	222+32	LT	599/602/605	MATCH EX.	214+57	EX. 6" UD				766						1			1		1	2
U240	I-71 SB TRANS	216+00	222+32	LT/RT	602/605	MATCH PROP.	216+00	U239						654				1				1		2
	* - UNLESS OTHERWISE CALLED OUT IN TYPICAL SECTION																							
TOTALS CARRIED TO GENERAL SUMMARY									0	190	0	6037	6203	0	0	0	30							

CALCULATED

CHECKED

UNDERDRAIN SUBSUMMARY

FRA-70-14.54

551
2317

ms consultants, inc.

PLOT.CEL
ms consultants, inc.
msconsultants.com
www.msconsultants.com
Ohio DOT Workspace
70\71 East Interchange 2E
1" 0.5" 0
Batchplot Spec: \\msconsultants.com\files\production\03\60\06634_2E\standards\plotdrv\batchplt.SPC
Pen Table: \\msconsultants.com\files\Standards\astm\ohdot\V8i\ms\plotting\pen\V8i_ms_std.tbl PDF: ohdotV8i
Plot Driver: \\msconsultants.com\files\Standards\astm\ohdot\v8i\ms\plotting\PDF.pltcfg PDF: 60-06634_2E_Columbus
34" x 22"
View: SHEET
By: dholl
Model: Sheet @ 11:04:22 AM
Printed: 1/17/2019
File: \\msconsultants.com\files\Production\03\60\06634_2E\drainage\sheets\06322DS006.dgn

REF NO.	LOCATION	STATION FROM	STATION TO	SIDE	SHEET NO.	UNDERDRAIN OUTLET ELEV.	UNDERDRAIN OUTLET STA.	UNDERDRAIN OUTLET TYPE		611 4" CONDUIT, TYPE F FOR UNDERDRAIN PIPE OUTLET FT	4" BASE PIPE UNDERDRAIN (12" DEPTH) *	605 4" BASE PIPE UNDERDRAIN (18" DEPTH) * FT	605 4" SHALLOW PIPE UNDERDRAIN (24" DEPTH) FT	605 4" DEEP PIPE UNDERDRAIN (60" DEPTH) * FT	605 4" UNCLASSIFIED PIPE UNDERDRAIN FT		STANDARD BENDS AND BRANCHES FOR INFORMATION ONLY: END CAP EA	4" X 4" 45° WYE EA	4" X 6" 45° WYE EA	4" X 4" TEE EA	4" X 4" 90° EA	6" x 4" REDUCER EA	4 X 4" 45° EA
U241	I-71 SB TRANS	222+32	227+50	LT	605/609	769.32	227+50	I-3-C		10		508					1						
U242	I-71 SB TRANS	222+32	227+50	LT/RT	605/609/638	768.27	227+50	I-3-C		10			509				1						1
U243	I-71 SB TRANS	227+53	228+02	LT	609	MATCH PROP.	228+02	U244				49					1						
U244	I-71 SB TRANS	228+02	231+17	LT/RT	609/612/646	MATCH PROP.	231+17	U245					335							1	1		
U245	I-71 SB TRANS	231+17	231+99	LT/RT	612/646	763.39	231+17	I-3-B		10			101				1			1			2
U246	I-71 SB TRANS	232+02	238+11	LT	646/649	764.05	232+02	I-3-C1		10			610				1						
U247	I-71 SB TRANS	238+11	239+68	LT	649	767.92	238+11	I-3-C1		10			159				1						1
U248	I-71 SB TRANS	216+00	222+32	RT	602/605	MATCH EX.	216+00	EX. 6" UD				642					1					1	2
U249	I-71 SB TRANS	222+32	225+20	RT	605/638	775.64	225+20	I-3-B		10		278					1						
U250	I-71 SB TRANS	231+17	231+99	RT	612/646	MATCH PROP.	231+17	U276				82					1			1			
U251	I-71 SB TRANS	232+02	237+17	RT	612/646/649	764.66	232+02	I-3-C1		10		513											2
U252	I-71 SB TRANS	237+17	238+50	RT	649	MATCH PROP.	237+17	U251					139				1						1
U253	I-70	788+98	789+35	LT	599/631	MATCH PROP.	788+98	U258					37				1				1		
U254	I-70	788+97	789+82	LT	599	MATCH PROP.	788+97	U258					85				1			1			
U255	I-70	788+96	789+83	RT	599/631	MATCH PROP.	788+96	U258				87					1			1			
U256	I-70	788+95	789+83	RT	631	MATCH PROP.	788+95	U258					87				1			1			
U257	I-70	788+94	789+83	RT	631	MATCH PROP.	788+94	U258					87				1			1			
U258	I-70	788+92	788+93	LT/RT	631	MATCH PROP.	788+93	WALL DRAIN							139					1			
U259	I-70	789+85	790+06	RT	599/631	MATCH PROP.	790+06	U262				22					1						1
U260	I-70	789+85	790+46	RT	631	MATCH PROP.	790+46	U262					60				1	1					
U261	I-70	789+85	790+86	RT	631	MATCH PROP.	790+86	U262					100				1	1					
U262	I-70	790+06	791+24	RT	631/635	MATCH PROP.	791+24	WALL DRAIN							144					1			1
U263	I-70	790+85	792+40	LT	602	796.74	792+40	I-3-C		10			190				1			1	1		
U264	I-70	791+30	792+40	LT	602/635	MATCH PROP.	792+40	U263					110				1						
U265	I-70	791+67	792+40	RT	602/635	797.74	792+40	I-3-C		10		74					1						1
U266	I-70	792+40	800+77	RT	02/605/635/63	MATCH PROP.	800+77	U267				838					1						
U267	I-70	792+36	800+77	RT	635/638	774.64	800+77	I-3-B		10			868				1			1	3		
U268	I-70	793+15	796+63	RT	635/638	MATCH PROP.	796+63	U269					357				1				1		
U269	I-70	794+12	800+86	RT	635/638	773.59	800+86	I-3-C		10			684				1			2	1		
U270	I-70	794+07	800+86	RT	635/638	774.59	800+86	I-3-C				678					1						
U271	I-70	800+83	803+07	RT	05/609/638/64	769.27	803+07	I-3-C		10		225					1	1					1
U272	I-70	800+82	806+73	RT	638/642/646	763.39	806+73	I-3-B		10			606				1	1		1			
U273	I-70	800+86	806+73	RT	638/642/646	759.04	806+73	MH-3		10			582				1						
U274	I-70	800+86	801+43	RT	638/642	MATCH PROP.	801+43	U283				51					1				1		
U275	I-70	803+07	805+99	RT	609/642	764.94	805+99	I-3-B		10		296					1				1		
U276	I-70	806+05	806+73	RT	612/646	MATCH PROP.	806+73	U272				68					1						
U277	I-70	806+73	807+35	RT		MATCH PROP.	806+73	U272					62										
U278	I-70	806+75	807+35	RT	646	759.04	806+73	MH-3		10			60										
U279	I-70 EB TRANS	207+35	210+57	LT	646	MATCH PROP.	207+35	U277					322				1						
U280	I-70 EB TRANS	212+71	213+90	LT/RT	649	MATCH PROP.	212+71	U251					127				1						1
	*- UNLESS OTHERWISE CALLED OUT IN TYPICAL SECTION																						
	TOTALS CARRIED TO GENERAL SUMMARY								0	160	0	4411	6277	0	283	0	34							

CALCULATED | CHECKED

UNDERDRAIN SUBSUMMARY

FRA-70-14.54

552
2317

ms consultants, inc.

PLOT.CEL
ms consultants, inc.
msconsultants.com
www.msconsultants.com
Ohio DOT Workspace
70\71 East Interchange 2E
0 0.5" 1"
Batchplot Spec: \\vnsconsultants.com\files\production\03\60\06634_2E\standards\plotdrv\batchplt.spc
Pen Table: \\vnsconsultants.com\files\Standards\astm\ohdot\V8i\ms\plotting\pen\V8i_ms_std.tbl
Plot Driver: \\vnsconsultants.com\files\Standards\astm\ohdot\v8i\ms\plotting\PDF.pltcfg
PDF: ohdotV8i
PDF: 60-06634_2E_Columbus
34" x 22"
View: SHEET
By: dhall
Model: Sheet
Printed: 1/11/2019 @ 11:13:50 AM
File: \\vnsconsultants.com\files\Production\03\60\06634_2E\drainage\sheets\05322250007.dgn

REF NO.	LOCATION	STATION FROM	STATION TO	SIDE	SHEET NO.	UNDERDRAIN OUTLET ELEV.	UNDERDRAIN OUTLET STA.	UNDERDRAIN OUTLET TYPE		611 4" CONDUIT, TYPE F FOR UNDERDRAIN PIPE OUTLET FT	4" BASE PIPE UNDERDRAIN * (12" DEPTH)	605 4" BASE PIPE UNDERDRAIN * (18" DEPTH) FT	605 4" SHALLOW PIPE UNDERDRAIN (24" DEPTH) FT	605 4" DEEP PIPE UNDERDRAIN * (60" DEPTH) FT	605 4" UNCLASSIFIED PIPE UNDERDRAIN FT		STANDARD BENDS AND BRANCHES FOR INFORMATION ONLY: END CAP EA	4" X 4" 45° WYE EA	4" X 6" 45° WYE EA	4" X 4" TEE EA	4" X 4" 90° EA		4 X 4" 45° EA
U281	I-70 EB TRANS	207+35	214+59	RT	646/649	MATCH PROP.	207+35	U278					725				1						
U282	I-70 EB TRANS	207+35	214+75	RT	646	MATCH PROP.	207+35	U295				742					1						2
U282A	I-70 EB TRANS	214+75	217+00	RT	646/649	MATCH EX.	217+00	EX UD				225					1						
U283	RAMP Q3	901+43	902+97	LT	642	765.52	902+97	MH-3		10			173								2		
U284	RAMP Q3	901+42	902+97	RT	642	767.64	902+97	I-3-D		10			184				1			1	1		
U285	RAMP Q3	901+42	902+97	RT	642	MATCH PROP.	902+97	U284					154				1						
U286	RAMP Q3	901+42	902+97	RT	642	767.64	902+97	I-3-D		10			154				1						
U287	RAMP Q3	903+02	904+96	LT	642	MATCH PROP.	904+96	U288					208				1				1		
U288	RAMP Q3	903+02	906+73	LT/RT	642/646	759.04	906+73	MH-3		10			385				1			1			
U289	RAMP Q3	903+03	904+18	RT		765.36	904+18	I-3-D		10			122				1				1		
U290	RAMP Q3	903+04	904+18	RT		765.36	904+18	I-3-D		10			114				1						
U291	RAMP Q3	904+23	906+23	RT	642/646	760.05	906+23	MH-3		10			200				1						
U292	RAMP Q3	904+23	906+25	RT	642/646	764.20	906+25	I-3-D		10		202					1						
U293	RAMP Q3	906+30	906+71	RT	646	759.98	906+71	MH-3		10			41				1						
U294	RAMP Q3	906+30	906+72	RT	646	764.14	906+72	I-3-D		10		43					1						
U295	RAMP Q3	906+73	907+33	RT	646	MATCH PROP.	906+73	U288					61							1			
U296	RAMP Q3	906+75	907+33	RT	646	759.98	906+75	MH-3		10			58				1						
U297	RAMP Q3	906+74	907+33	RT	646	764.14	906+74	I-3-D		10		59					1						
U298	RAMP N3	889+01	890+09	RT	631	MATCH PROP.	889+01	U258				108					1						
U299	RAMP N3	890+09	891+23	LT	631/635	MATCH PROP.	891+23	U262				115					1						
U300	MOOBERRY	888+82	889+69	LT	631	770.08	888+82	CB-3		10		89					1						
U301	MOOBERRY	888+82	889+67	RT	631	770.25	888+82	CB-3		10		85					1						
U302	MOOBERRY	889+76	890+86	LT	631	771.35	889+76	CB-3		10		113					1						
U303	MOOBERRY	890+93	891+91	LT	635	774.63	890+93	CB-3		10		99					1						
U304	MOOBERRY	890+92	891+91	RT	635	774.78	890+92	CB-3		10		98					1						
U305	MOOBERRY	891+98	892+88	LT	635	777.54	891+98	CB-3		10		90					1						
U306	MOOBERRY	892+96	894+20	LT	635	779.60	892+96	CB-3		10		122					1						
U307	MOOBERRY	892+96	893+52	RT	635	779.78	892+96	CB-3		10		58					1						
U308	MOOBERRY	893+59	894+20	RT	635	780.38	893+59	CB-3		10		62					1						
U309	MOOBERRY	894+27	895+35	LT	635	780.83	894+27	CB-3		10		106					1						
U310	NOT USED																						
U311	NOT USED																						
U312	NOT USED																						
U313	NOT USED																						
U314	NOT USED																						
U315	NOT USED																						
U316	NOT USED																						
U317	MOOBERRY	895+40	896+30	LT	635/638	781.57	895+40	CB-3		10		90					1						
U318	MOOBERRY	895+40	896+30	RT	635/638	781.74	895+40	CB-3		10		90					1						
U319	MOOBERRY	896+37	898+40	LT	638	782.10	896+37	CB-3		10		202					1						
U320	MOOBERRY	896+37	897+31	RT	638	782.35	896+37	CB-3		10		93					1						
	* - UNLESS OTHERWISE CALLED OUT IN TYPICAL SECTION																						
	TOTALS CARRIED TO GENERAL SUMMARY								0	260	0	2891	2579	0	0	0	32						

CALCULATED | CHECKED

UNDERDRAIN SUBSUMMARY

FRA-70-14.54

553
2317

ms consultants, inc.

PLOT.CEL
ms consultants, inc.
msconsultants.com
www.msconsultants.com
Ohio DOT Workspace
70\71 East Interchange 2E
0 1" 0.5"
PDF: ohdot\V8i
PDF: 60-06634_2E_Columbus
Batchplot Spec: \\msconsultants.com\files\production\03\60\06634_2E\standards\plotdr\batchplt.spc
Pen Table: \\msconsultants.com\files\Standards\astm\ohdot\V8\ms\plotting\pen\V8i_ms_std.tbl
Plot Driver: \\msconsultants.com\files\Standards\astm\ohdot\v8i\ms\plotting\PDF.pltcfg
Model: Sheet
Printed: 1/1/2019 @ 11:21:02 AM
File: \\msconsultants.com\files\Production\03\60\06634_2E\drainage\sheets\1053220S008.dgn
View: SHEET
By: dhall
34" x 22"

REF NO.	LOCATION	STATION FROM	STATION TO	SIDE	SHEET NO.	UNDERDRAIN OUTLET ELEV.	UNDERDRAIN OUTLET STA.	UNDERDRAIN OUTLET TYPE		611 4" CONDUIT, TYPE F FOR UNDERDRAIN PIPE OUTLET FT	4" BASE PIPE UNDERDRAIN (12" DEPTH) *	605 4" BASE PIPE UNDERDRAIN (18" DEPTH) * FT	605 4" SHALLOW PIPE UNDERDRAIN (24" DEPTH) FT	605 4" DEEP PIPE UNDERDRAIN (60" DEPTH) * FT	605 4" UNCLASSIFIED PIPE UNDERDRAIN FT		STANDARD BENDS AND BRANCHES FOR INFORMATION ONLY: END CAP EA	4" X 4" 45° WYE EA	4" X 6" 45° WYE EA	4" X 4" TEE EA	4" X 4" 90° EA		4 X 4" 45° EA
U321	MOOBERRY	897+38	897+85	RT	638	782.98	897+38	CB-3		10		64					1						
U322	MOOBERRY	898+07	898+43	RT	638	783.58	898+43	CB-3		10		42					1						
U323	MOOBERRY	898+46	901+00	LT	638/642	783.26	898+46	CB-6		10		256					1						
U324	MOOBERRY	898+47	899+61	RT	638	783.58	898+47	CB-3		10		114					1						
U325	MOOBERRY	899+68	900+44	RT	638	784.13	899+68	CB-3		10		98					1						
U326	MOOBERRY	900+67	900+91	RT	638/642	784.69	900+91	CB-3		10		33					1						
U327	MOOBERRY	901+07	901+88	LT	642	784.49	901+07	CB-3		10		84					1						
U328	MOOBERRY	900+96	901+88	RT	642	784.69	900+96	CB-3		10		91					1						
U329	MOOBERRY	901+96	902+76	LT	642	784.95	901+96	CB-3		10		81					1						
U330	MOOBERRY	901+96	902+80	RT	642	785.13	901+96	CB-3		10		85					1						
U331	MOOBERRY	902+83	903+45	LT	642	785.34	902+83	CB-3		10		62					1						
U332	MOOBERRY	902+88	904+00	RT	642	785.53	902+88	CB-3		10		112					1						
U333	MOOBERRY	903+52	903+92	LT	642	785.65	903+52	CB-3		10		40					1						
U334	MOOBERRY	903+96	904+09	LT	642	786.34	903+96	CB-3		10		13					1						
U335	MOOBERRY/CHILDREN'S	889+73	591+77	LT/RT	631	771.49	889+73	CB-3		10		51					1						
U336	CHILDREN'S	590+00	591+70	LT	631	773.03	591+70	CB-3		10		160					1			1			
U337	CHILDREN'S	590+00	591+59	LT/RT	631	MATCH PROP.	591+59	U336				203									1		
U338	MOOBERRY/AMBULANCE	891+97	691+05	LT/RT	635	777.70	891+97	CB-3		10		133					1						
U339	MOOBERRY/AMBULANCE	892+91	691+04	RT	635	779.78	892+91	CB-3		10		129					1						
	*- UNLESS OTHERWISE CALLED OUT IN TYPICAL SECTION																						
	TOTALS CARRIED TO GENERAL SUMMARY									0	180	0	1851	0	0	0	0	18					

CALCULATED | CHECKED

UNDERDRAIN SUBSUMMARY

FRA-70-14.54

554
2317

PLOT.CEL

ms consultants, inc.
msconsultants.com

Ohio DOT Workspace
70\71 East Interchange 2E
www.msconsultants.com

1" 0.5" 0

Batchplot Spec: \\msconsultants.com\Files\Production\03\60\06634_2E\standards\plotdrv\batchplt.spc
Pen Table: \\msconsultants.com\Files\Standards\ustn\ohdot\V8\ms\plotting\pen\V8i_ms_std.tbl
Plot Driver: \\msconsultants.com\Files\Standards\ustn\ohdot\v8i\ms\plotting\PDF.pltcfg

Model: Sheet @ 11:29:47 AM View: SHEET
Printed: 1/11/2019 By: dhall
File: \\msconsultants.com\Files\Production\03\60\06634_2E\drainage\sheets\10532205004.dgn

34" x 22"

REF NO.	LOCATION	STATION FROM	STATION TO	SIDE	SHEET NO.	UNDERDRAIN OUTLET ELEV.	UNDERDRAIN OUTLET STA.	UNDERDRAIN OUTLET TYPE		611 4" CONDUIT, TYPE F FOR UNDERDRAIN PIPE OUTLET FT	4" BASE PIPE UNDERDRAIN (12" DEPTH) * FT	605 4" BASE PIPE UNDERDRAIN (18" DEPTH) * FT	605 4" SHALLOW PIPE UNDERDRAIN (24" DEPTH) FT	605 4" DEEP PIPE UNDERDRAIN (60" DEPTH) * FT	605 4" UNCLASSIFIED PIPE UNDERDRAIN FT		STANDARD BENDS AND BRANCHES FOR INFORMATION ONLY: END CAP EA	4" X 4" 45° WYE EA	4" X 6" 45° WYE EA	4" X 4" TEE EA	4" X 4" 90° EA	6"X4" REDUCER EA	4 X 4" 45° EA
U340-U365	NOT USED																						
U366	FULTON / THIRD	153+83	31+81	RT/LT	718	750.21	31+81	CB3A		10	18												
U367	FULTON ST	32+03	33+50	LT	718	749.18	33+50	CB3		10	137												2
U368	FULTON ST	31+98	35+06	RT	718/721	747.31	35+06	CB3A		10	298												
U369	FULTON ST	33+50	33+61	LT	718	749.18	33+71	CB3		12													1
U370	FULTON / LAZELLE	33+66	10+49	LT	718	748.50	10+49	CB3		10	27												
U371	LAZELLE	10+55	10+49	LT	718	748.50	10+49	CB3		7													
U372	LAZELLE	10+23	10+45	RT	721	748.38	10+45	CB3		10	15												
U373	LAZELLE	10+55	10+45	RT	721	748.38	10+45	CB3		10													
U374	FULTON ST	34+21	35+00	LT	721	747.46	35+06	CB3A		10	69												
U375	FULTON ST	35+11	35+60	RT	721	747.02	35+60	CB3		10	38												
U376	FULTON ST	35+01	36+14	LT	721	747.46	35+01	CB3		10	98						1						
U377	FULTON ST	154+59	36+75	LT	721	747.27	36+75	CB3		10	9						1						
U378	FULTON ST	35+60	36+17	RT	721	747.02	35+60	CB3		10	94												
U379	THIRD ST	150+08	150+78	RT	731	746.90	150+08	CB3		10	59						1						
U380	NOT USED																						
U381	NOT USED																						
U382	NOT USED																						
U383	NOT USED																						
U384	NOT USED																						
U385	NOT USED																						
U386	THIRD	152+48	153+13	RT	718	MATCH EX.	152+48	EX. UD			73						1					1	
U387	NOT USED																						
U388	FOURTH/FULTON	153+58	36+71	RT	721	747.82	36+71	CB-3		10	50						1						
U389	NOT USED																						
U390	NOT USED																						
U391	NOT USED																						
U392	NOT USED																						
U393	NOT USED																						
U394	NOT USED																						
U395	NOT USED																						
U396	NOT USED																						
U397	NOT USED																						
U398	NOT USED																						
U399	NOT USED																						
U400	FULTON ST	31+80	31+98	LT	718	750.21	31+81	CB3A		10	8						1						
	PRCO - ITEM 611 PRECAST REINFORCED CONCRETE OUTLET - 2 EACH																						
	* - UNLESS OTHERWISE CALLED OUT IN TYPICAL SECTION																						
TOTALS CARRIED TO GENERAL SUMMARY										0	149	975	0	0	0	0	0	6					

CALCULATED | CHECKED

UNDERDRAIN SUBSUMMARY

FRA-70-14.54

555
2317

ms consultants, inc.

PLOT.CEL
ms consultants, inc.
msconsultants.com
www.msconsultants.com
Ohio DOT Workspace
70\71 East Interchange 2E
1" 0.5" 0
Batchplot Spec: \\msconsultants.com\files\production\03\60\06634..2E\standards\oldr\batchplt.SPC
Pen Table: \\msconsultants.com\files\Standards\astm\ohdot\V8i\ms\plotting\pen\V8i_ms_std.TBL PDF: ohdot.V8i
Plot Driver: \\msconsultants.com\files\Standards\astm\ohdot\v8i\ms\plotting\PDF.prtcfg PDF: 60-06634..2E_Columbus
Model: Sheet View: SHEET
Printed: 2/27/2019 @ 12:25:10 PM By: dholl
File: \\msconsultants.com\files\Production\03\60\06634..2E\roadway\sheets\053220GS022.dgn
34" x 22"

ESTIMATED QUANTITY SHEET NO.	203		511	SPECIAL	SPECIAL		SPECIAL	SPECIAL	SPECIAL		SPECIAL	638	608			638	638	638			638	638	SPECIAL	638		SPECIAL			659
	ROADWAY, MISC.: INCREASE OR DECREASE IN EXCAVATION AND BACKFILL (COL. 801)		CONCRETE, MISC.: CONCRETE BLOCKING, CLASS C, INCREASE OR DECREASE (COL. 801)	4" GATE VALVE WITH VALVE BOX, (COL. 802)	6" GATE VALVE WITH VALVE BOX, (COL. 802)		12" GATE VALVE WITH VALVE BOX, (COL. 802)	6" FIRE HYDRANT, TYPE A (COL. 809)	6" FIRE HYDRANT, TYPE A MODIFIED (COL. 809)		FIRE HYDRANT ABANDONED, (COL. 809)	WATER WORK MISC.: 24"X6" TAPPING SLEVE AND VALVE (COL. 803)	4" CONCRETE WALK			WATER WORK, MISC.: 1 ½" WATER SERVICE TAP, TRANSFERRED (COL. 805)	WATER WORK, MISC.: 10" WATER SERVICE TAP, TRANSFERRED (COL. 805)	WATER WORK, MISC.: 12" WATER SERVICE TAP, TRANSFERRED (COL. 805)			WATER WORK, MISC.: 4" DUCTILE IRON WATER PIPE AND FITTINGS (COL. 801)	WATER WORK, MISC.: 6" DUCTILE IRON WATER PIPE AND FITTINGS (COL. 801)	WATER WORK, MISC.: 8" DUCTILE IRON WATER PIPE AND FITTINGS (COL. 801)	WATER WORK, MISC.: 12" DUCTILE IRON WATER PIPE AND FITTINGS (COL. 801)		FITTINGS, INCREASE OR DECREASE (COL.801)			SEEDING AND MULCHING, CLASS 2
	CY		CY	EACH	EACH		EACH	EACH	EACH		EACH	EACH	SQ FT			EACH	EACH	EACH			FT	FT	FT	FT		LB			SY
1262	40		20								2					1										500			
1264											4																		
1266					1				1				69									10							50
1268					3		2	2														40			320				
1269					2		2	1									1	1				41			400				
1270					2		1		1													35			332				
1273					1			1														28							
1274				2																	27		5						
1277																													
1282					1			1				1										16							
TOTALS CARRIED TO GENERAL SUMMARY	40		20	2	10		5	5	2		6	1	69			1	1	1			27	170	5	1052		500			50

CALCULATED JAP
CHECKED HRB

WATER RELOCATION SUB-SUMMARY

FRA-70-14.54

ms consultants, inc.

PLOT.CEL

ms consultants, inc.
msconsultants.com

Ohio DOT Workspace
70\71 East Interchange 2E
www.msconsultants.com

Batchplot Spec: \\msconsultants.com\files\production\03\60\06634_2E\standards\plotdrv\batchplt.spc
Pen Table: \\msconsultants.com\files\Standards\ustn\ohdot\V8i\ms\plotting\pen\V8i_ms_std.tbl PCF: ohdotV8i
Plot Driver: \\msconsultants.com\files\Standards\ustn\ohdot\v8i\ms\plotting\PDF.pltcfg

34" x 22"

View: FENCE_VIEW1
By: jdouglas
Model: Sheet
Printed: 6/19/2018 @ 8:27:23 AM
File: N:\03\60\06634_2E\drainage\sheets\1053220B001.dgn

PROJECT DESCRIPTION

THIS PROJECT CONSISTS OF THE RECONSTRUCTION OF 0.76 MILES OF I-70 IN THE CITY OF COLUMBUS, INCLUDING THE RECONFIGURATION OF THE I-70/I-71 SYSTEM INTERCHANGE. WORK INCLUDES THE RECONFIGURATION OF LOCAL STREET ACCESS TO THE FREEWAYS AND THE CONSTRUCTION OF A SYSTEM OF ONE-WAY ROADS (MOUND ST. WESTBOUND AND FULTON ST. EASTBOUND) PROVIDING ACCESS TO AND FROM THE FREEWAYS. WORK ALSO INCLUDES THE CONSTRUCTION OF 4 BRIDGES WITHIN THE INTERCHANGE AND CROSSING OVER AND UNDER THE FREEWAY SYSTEM, RECONSTRUCTION OF THE TRUNK LINE STORM SEWERS, REPLACEMENT OF THE FREEWAY LIGHTING SYSTEMS, RESURFACING AND RECONSTRUCTION OF CITY STREET INTERSECTIONS INCLUDING TRAFFIC CONTROL UPGRADES CONNECTING WITH THE ACCESS ROADS.

LEGEND

- INLET, TYPE 3-D
- INLET, TYPE 3-C
- CATCH BASIN, TYPE 3A / COC STANDARD CURB & GUTTER INLET
- CATCH BASIN, TYPE 3 / COC DOUBLE CURB & GUTTER INLET
- CATCH BASIN, TYPE 2-2B
- CATCH BASIN, TYPE 8
- CATCH BASIN, TYPE 5
- MANHOLE, TYPE 3 / COC MANHOLE, TYPE C
- MANHOLE, TYPE 5

USGS QUADRANT
SOUTHEAST COLUMBUS, OHIO

*LONGITUDE: 82° 59′ 08″
*LATITUDE: 39° 57′ 22″

*LONGITUDE AND LATITUDE TO APPROX. CENTER OF PROJECT

PROJECT DATA

TOTAL AREA (RIGHT-OF-WAY):	95.0 ACRES	RUNOFF COEFFICIENT FOR PRE-CONSTRUCTION SITE:	0.63
PROJECT EARTH DISTURBED AREA:	56.1 ACRES	RUNOFF COEFFICIENT FOR POST CONSTRUCTION SITE:	0.68
ESTIMATED CONTRACTOR EARTH DISTURBED AREA:	24.0 ACRES	IMMEDIATE RECEVING WATERS: SCIOTO RIVER	
NOTICE OF INTENT EARTH DISTURBED AREA:	80.1 ACRES	SUBSEQUENT RECEIVING WATERS: SCIOTO RIVER/OLENTANGY RIVER/ ALUM CREEK	
IMPERVIOUS (PAVED) AREA FOR PRE-CONSTRUCTION SITE:	26.0 ACRES		
IMPERVIOUS (PAVED) AREA FOR POST-CONSTRUCTION SITE:	32.2 ACRES		

NOTE: POST CONSTRUCTION BMP FACILITIES TO COVER TREATMENT REQUIREMENTS FOR THIS PROJECT AND OTHER JOINTLY PLANNED PROJECTS WERE CONSTRUCTED BY ODOT WITH PROJECT FRA-70-13.72 PID 94303; 2929 DR E.

N

HORIZONTAL SCALE IN FEET
0 50 100 200

CALCULATED ACW
CHECKED SSR

PROJECT SITE PLAN

FRA-70-14.54

ms consultants, inc.

PLOT.CEL

ms consultants, inc.
msconsultants.com

Ohio DOT Workspace
70\71 East Interchange 2E

www.msconsultants.com

Batchplot Spec: \\msconsultants.com\Files\production\03\60\06634_2E\standards\plotdrv\batchplt.pc6 PCF: ohdot\V8i
Pen Table: \\msconsultants.com\Files\Standards\ustn\ohdot\V8i\ms\plotting\pen\V8i_ms_std.tbl PCF: 60-06634_2E_Columbus
Plot Driver: \\msconsultants.com\Files\Standards\ustn\ohdot\V8i\ms\plotting\PDF.pltcfg

Model: Sheet
Printed: 6/19/2018 @ 8:27:37 AM
File: N:\03\60\06634_2E\drainage\sheets\05322080002.dgn
View: FENCE_VIEW1
By: jdouglas

34" x 22"

APPROXIMATE LOCATION OF CONSTRUCTION DEBRIS TO BE REMOVED. SEE GENERAL NOTE SHEET 83 FOR FURTHER DETAILS.

BEGIN PROJECT
℄ I-70
STA.766+99.84
S.L.M. 14.54
E040 (632)

SEE SHEET 578

SEE SHEET 575

SEE SHEET 577

COMMERCIAL
RESIDENTIAL
GRANT AVE
ENGLER ST
WASHINGTON AVE
FRA-70-1476
TRANS-171 SB
TRANS 70 WB
TRANS 170 WB
TRANS 171 SB
I-70 WB
I-70 EB
RAMP N4
RAMP N1
RAMP N3
RAMP P2
RAMP Q3
MOOBERRY ST
EX. FRA-70-1456
FRA-70-1461P
FRA-70-1493 L&R
FRA-70-1498
CHILDRENS DR
AMBULANCE DR
PARSONS AVE
LIVINGSTON AVE

HORIZONTAL SCALE IN FEET
0 50 100 200

CALCULATED ACW
CHECKED SSR

PROJECT SITE PLAN

FRA-70-14.54

576
2317

ms consultants, inc.

PLOT.CEL

ms consultants, inc.
msconsultants.com

www.msconsultants.com

Ohio DOT Workspace
70\71 East Interchange 2E

Batchplot Spec: \\msconsultants.com\files\production\03\60\06634_2E\standards\oladr\batchplt.spc
Pen Table: \\msconsultants.com\files\Standards\usltn\ohdot\V8i\ms\plotting\pen\V8i_ms_std.tbl
Plot Driver: \\msconsultants.com\files\Standards\usltn\ohdot\V8i\ms\plotting\PDF.pltcfg

PDF: ohdotV8i
PDF: 60-06634_2E_Columbus

Model: Sheet
Printed: 6/19/2018 @ 8:27:42 AM
File: N:\03\60\06634_2E\drainage\sheets\1053220B003.dgn

View: FENCE_VIEW1
By: jbouglos

34" x 22"

APPROXIMATE LOCATION OF CONSTRUCTION DEBRIS TO BE REMOVED. SEE GENERAL NOTE SHEET 83 FOR FURTHER DETAILS.

END PROJECT
I-70
STA. 807+35.02
S.L.M. 15.30

E040 (632)

EX. FRA-70-1525

SEE SHEET 576

RESIDENTIAL
COMMERCIAL
SEVENTEENTH ST
FULTON ST
RAMP P2
TRANS 170 WB
TRANS 171 SB
MOOBERRY ST
EIGHTEENTH ST
CARPENTER ST
GILBERT ST
22nd ST
OHIO AVE
TRANS I-70 WB
TRANS I-70 EB

HORIZONTAL SCALE IN FEET
0 50 100 200

CALCULATED ACW
CHECKED SSR

PROJECT SITE PLAN

FRA-70-14.54

577
2317

PLOT.CEL

ms consultants, inc.
msconsultants.com

Ohio DOT Workspace
70\71 East Interchange 2E
www.msconsultants.com

Batchplot Spec: \\msconsultants.com\files\production\03\60\06634_2E\standards\plotdrv\batchplt.spec
Pen Table: \\msconsultants.com\files\Standards\ustn\ohdot\V8i\ms\plotting\pen\V8i_ms_std.tbl
Plot Driver: \\msconsultants.com\files\Standards\ustn\ohdot\v8i\ms\plotting\PDF.pltcfg

34" x 22"

Model: Sheet
Printed: 6/19/2018 @ 8:27:46 AM
File: N:\03\60\06634_2E\drainage\sheets\1053220B004.dgn
View: FENCE_VIEW1
By: jdouglas

APPROXIMATE LOCATION OF CONSTRUCTION DEBRIS TO BE REMOVED. SEE GENERAL NOTE SHEET 83 FOR FURTHER DETAILS.

HORIZONTAL SCALE IN FEET
0 50 100 200

CALCULATED ACW
CHECKED SSR

PROJECT SITE PLAN

FRA-70-14.54

578
2317

ms consultants, inc.

WOODED AREA 6 TO BE REMOVED JUST NORTH OF THE BROAD STREET AND I.R. 71 SB TO BROAD STREET EXIT RAMP.

WOODED AREA 7 TO BE REMOVED AT THE SOUTHERN CORNER OF WILLOW STREET AND WILLOW ALLEY.

WOODED AREA 8 TO BE REMOVED SOUTH OF LONG STREET, BETWEEN THE I.R. 71 SB TO BROAD STREET EXIT RAMP AND WILLOW ALLEY.

WOODED AREA 5 TO BE REMOVED BETWEEN OAK STREET AND BROAD STREET, JUST WEST OF THE BROAD STREET TO I.R. 71 SB ENTRANCE RAMP.

WOODED AREA 4 TO BE REMOVED SOUTH OF OAK STREET, BETWEEN THE BROAD STREET TO I.R. 71 SB ENTRANCE RAMP AND LESTER DRIVE.

JEFFERSON AVENUE

BOONE STREET

JEFFERSON AVENUE

WILLOW STREET

WILLOW ALLEY

LESTER DRIVE

I.R. 71 SB

SPRING STREET

I.R. 71 NB

LONG STREET

RAMP TO I-670 E

ELIJAH PIERCE AVE

FRANKLIN AVENUE W

ELLIOT ALLEY

CAPITAL STREET WEST

LESTER DRIVE

BROAD STREET

I.R. 71 SB

I.R. 71 NB

TOWN STREET

OAK STREET

CAPITAL ST E

AVON PLACE

BOONE STREET

PARSONS AVENUE

HAMILTON AVENUE

BRYDEN ROAD

CHAPEL STREET

GUSTAVUS LANE

FRANKLIN AVENUE E

OAK STREET

CAPITAL STREET EAST

WOODED AREAS
APPROXIMATE ACREAGE

AREA #	ACREAGE
1	0.12
2	0.45
3	0.42
4	0.26
5	0.28
6	0.04
7	0.02
8	0.29

WOODED AREA 1 TO BE REMOVED BETWEEN OAK STREET AND BROAD STREET, ALONG THE EASTERN SIDE OF THE I.R. 71 NB TO BROAD STREET EXIT RAMP.

WOODED AREA 2 TO BE REMOVED BETWEEN BROAD STREET AND LONG STREET, ALONG THE EASTERN SIDE OF THE BROAD STREET TO I.R. 71 NB ENTRANCE RAMP.

WOODED AREA 3 TO BE REMOVED BETWEEN BROAD STREET AND LONG STREET, ALONG THE EASTERN SIDE OF THE BROAD STREET TO I.R. 71 NB ENTRANCE RAMP.

LEGEND

HATCHED TREE AREAS SHALL BE REMOVED PER THE ENDANGERED BAT HABITAT REMOVAL NOTE ON SHEET 77.

NOTE:
COST FOR REMOVAL OF THE WOODED AREAS AND TREES TO BE PAID FOR AS PART OF ITEM 201, CLEARING AND GRUBBING, AS PER PLAN.

N

0 50 100 200
HORIZONTAL SCALE IN FEET

CLEARING AND GRUBBING TREE REMOVAL PLAN

FRA-70-14.54

578A
2317

PLOT.CEL

ms consultants, inc.
msconsultants.com

Ohio DOT Workspace
70\71 East Interchange 2E
www.msconsultants.com

1"
0.5"
0

PDF: ohdot\V8i
PCF: 60-06634_2E_Columbus

Batchplot Spec: \\msconsultants.com\files\production\03\60\06634_2E\standards\ohdot\v8i\batchplt.sbs
Pen Table: N:\03\60\06634_2E\standards\tables\V8i_ms_std_06634_2D_INDEX_SHEETS.tbl
Plot Driver: \\msconsultants.com\files\Standards\ustn\ohdot\v8i\ms\plotting\PDF.pltcfg

Model: Sheet
Printed: 6/19/2018 @ 8:27:57 AM
File: N:\03\60\06634_2E\roadway\sheets\053220P00A.dgn

View: FENCE_VIEW1
By: jdougas

34" x 22"

SYMBOL LEGEND

County Line
Township Line
Section Line
Corporation Line or
Fence Line (Ex) —x—x— (Pr) —x—x—
Center Line
Right of Way (Ex) Ex R/W
Right of Way (Pr) R/W
Limited Access Right of Way (Pr) LA
Standard Highway Ease.(Ex) Ex SH
Temporary Right of Way TMP
Channel Ease. (Pr) CH
Utility Ease. (Ex) Ex U
Railroad or
Guardrail (Ex) (Pr)
Construction Limits
Edge of Pavement (Ex)
Edge of Pavement (Pr)
Edge of Shoulder (Ex)
Edge of Shoulder (Pr)
Electric (Ex) —E— (Pr) E
Gas (Ex) —G— (Pr) G
Water (Ex) —W— (Pr) W
Fiber Optic (Ex) —FO— (Pr) FO

Ditch / Creek (Ex)
Ditch / Creek (Pr)
Tree Line (Ex)
Ownership Hook Symbol , Example
Property Line Symbol , Example
Break Line Symbol , Example
Tree (Pr) , Tree (Ex) , Shrub (Ex)
Tree (Remove) , Shrub (Remove)
Evergreen (Ex) , Stump
Evergreen (Remove) , Stump (Remove)
Aerial Target
Post (Ex) , Mailbox (Ex) MB , Mailbox (Pr) MB
Light (Ex) , Telephone Marker (Ex) TEL
Fire Hydrant (Ex) , Fire Hydrant (Pr)
Water Valve (Ex) , Utility Valve Unknown (Ex.) U
Water Valve (Adj. To Gr.) , Water Service Valve (Adj. To Gr.) W
Sanitary Manhole (Ex) SA , Sanitary Manhole (Pr) SA
Telephone Pole (Ex) , Power Pole (Ex) , Power Pole (Pr)
Light Pole (Ex) , Light Pole (Pr)
Electric Box (Ex) E
Conv Ground MTD Luminaire (Pr)
Fire Hydrant (Ex Adj. To Gr.)
Sanitary Sewer (Ex) —SAN— (Pr) SAN
Storm Sewer (Ex) (Pr-Under 12") (Pr-12" and Over)
Combined Sewer (Ex) —CS—
Parking Meter (Ex) PM

Soil Boring Symbol (Proposed)
Soil Boring Symbol (Historical)
Subsurface Utilities Test Hole Symbol
Tree Grate (Pr)
Curb Ramp (Pr)
Drilled Shaft Wall (Pr)
Electric Manhole (Ex) E (Pr)
Lighting Pull Boxes (Pr) LT PB
Signal Pull Box (Pr)

Electric Vault (Pr) TR
Signal Transformer (Pr)
Signal Controller Cabinet (Pr)
Signal Poles (Pr)
Inlets (Pr)
Inlet (Adj. To Gr.)
Catch Basins (Ex) (Pr)
Catch Basins (Adj. To Gr.)
Manholes (Ex) (Pr)
Manhole (Adj. To Gr.)
Underdrain (Pr.)
Trench Drain With Grate (Pr.)
Drainage Structure ID XXX

Pavement Planing & Resurfacing
Bus Pad (Pr)
Brick Crosswalk
8" Concrete Walk
Concrete Surface Pavement (within intersections)
Ditch Erosion Protection Mat
Seeding & Erosion Control
Tied Concrete Block Mat
Rock Channel Protection, Type C
Seeding & Mulching
6" Concrete Slope Protection
Pavement Utility Repair

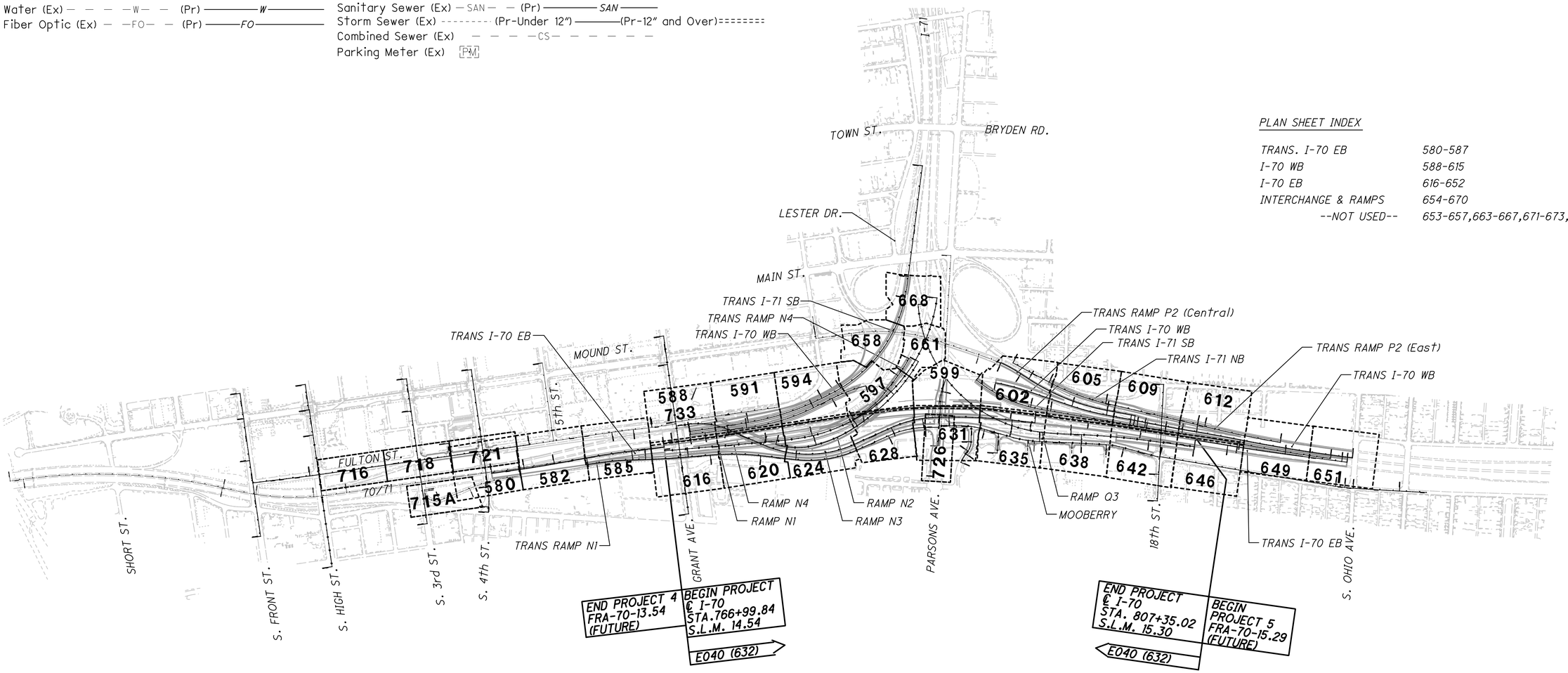

PLAN SHEET INDEX

TRANS. I-70 EB	580-587
I-70 WB	588-615
I-70 EB	616-652
INTERCHANGE & RAMPS	654-670
--NOT USED--	653-657,663-667,671-673,730

N

0 200 400 800
HORIZONTAL SCALE IN FEET

CALCULATED
CHECKED

PLAN SHEET INDEX MAP

FRA-70-14.54

579
2317

CROSS REFERENCES	
SHEET NO	DESCRIPTION
	PROFILE(S)
674-675	TRANS I-70 EB (WEST SIDE)

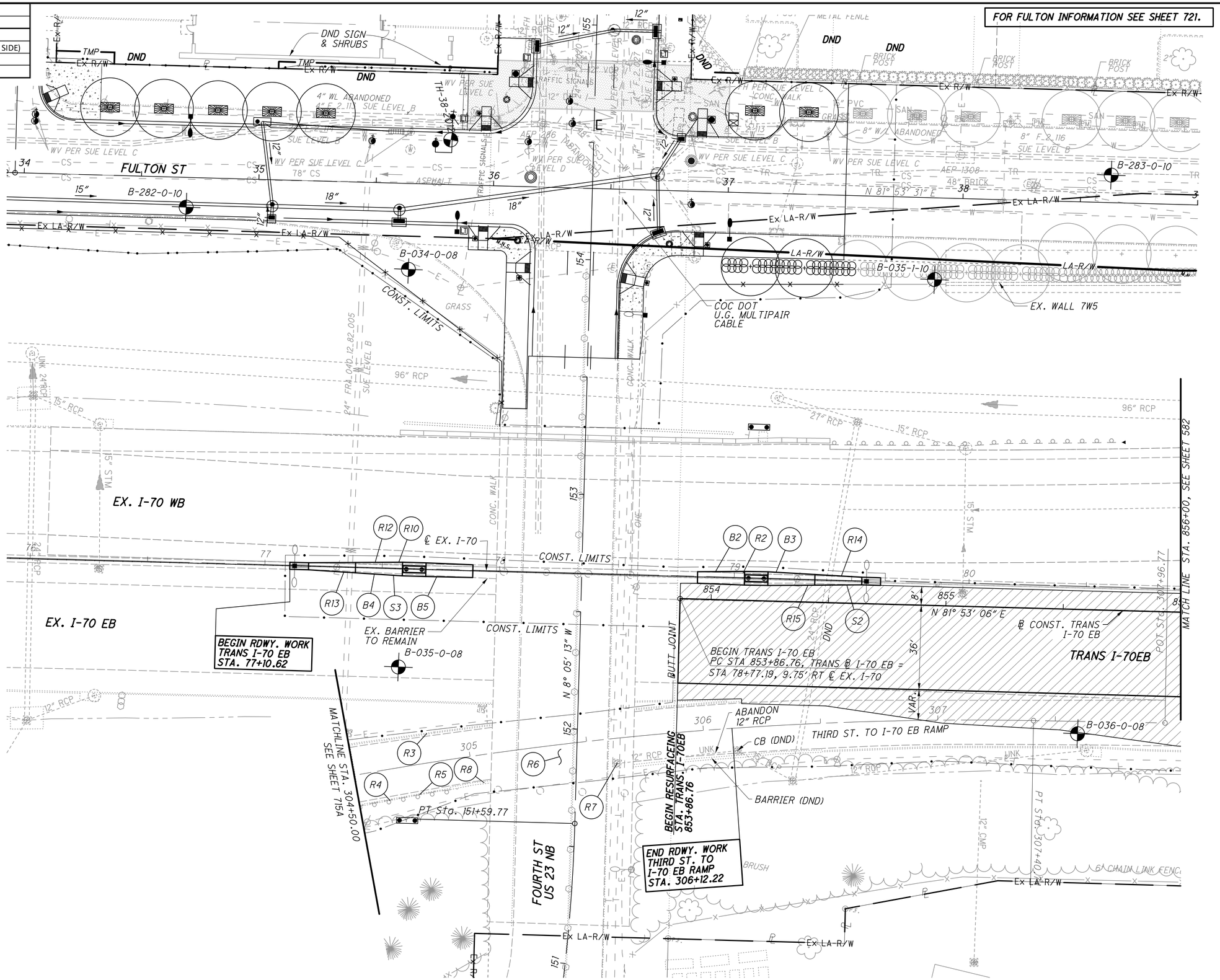

PLOT.CEL

ms consultants, inc.
msconsultants.com

Ohio DOT Workspace
70\71 East Interchange 2E
www.msconsultants.com

Batchplot Spec: \\msconsultants.com\files\production\03\60\06634_2E\standards\plotdrv\batchplt.spc
Pen Table: N:\03\60\06634_2E\standards\tables\V8i_ms_std_06634_2D_Plan View.tbl
Plot Driver: \\msconsultants.com\files\Standards\ustn\ohdot\v8i\ms\plotting\PDF.pltcfg

Model: Sheet
Printed: 6/19/2018 @ 8:28:09 AM
File: N:\03\60\06634_2E\roadway\sheets\105322GP001.dgn
View: FENCE_VIEW1
By: jdouglas

34" x 22"

HORIZONTAL SCALE IN FEET 0 10 20 40

CALCULATED
CHECKED

PLAN - TRANS I-70 EASTBOUND
STA. 853+86.76 TO STA. 856+00

FRA-70-14.54

580
2317

ms consultants, inc.

PLOT.CEL

ms consultants, inc.
msconsultants.com

www.msconsultants.com

Ohio DOT Workspace
70\71 East Interchange 2E

1" 0.5" 0

Batchplot Spec: \\msconsultants.com\files\production\03\60\06634_2E\standards\plotdrv\batchplt.spc
Pen Table: N:\03\60\06634_2E\standards\tables\V8i_ms_std_06634_2D_Plan View_NoClouds.tbl
Plot Driver: \\msconsultants.com\files\production\03\60\06634_2E\standards\ustn\ohdot\v8i\ms\plotting\PDF.pltcfg
PDF: ohdotV8i

34" x 22"

Model: Sheet
Printed: 10/24/2018 @ 1:36:38 PM
File: N:\03\60\06634_2E\roadway\sheets\1053220001.dgn
View: FENCE_VIEW1
By: Ibrendinger

REF. NO.	SHEET NO.	STATION FROM	STATION TO	SIDE		202 CONCRETE BARRIER REMOVED FT	202 CURB REMOVED FT	202 PAVEMENT REMOVED SQ YD		202 INLET REMOVED EACH						252 FULL DEPTH PAVEMENT SAWING FT	512 SEALING OF CONCRETE SURFACES SQ YD		622 BARRIER, MISC.: NEW JERSEY STYLE, TYPE B50, AS PER PLAN FT	626 BARRIER REFECTOR, TYPE 1, BI-DIRECTIONAL EACH					
		THIRD ST. RAMP (THIRD) Ex I-70 (I-70)																						
R2	580	78+84.34 (I70)	79+62.35 (I70)	RT/LT		78																		
R3	715B	304+50.00 (THIRD)	305+09.11 (THIRD)	LT			60																	
R4	715B	304+50.00 (THIRD)	304+92.73 (THIRD)	RT		42																		
R5	715B	304+50.00 (THIRD)	304+89.76 (THIRD)	RT			40																	
R6	715B	304+50.00 (THIRD)	306+12.22 (THIRD)	RT\LT				392																
R7	715B	305+62.03 (THIRD)		RT						1														
R8	715B	304+89.76 (THIRD)	305+72.03 (THIRD)	RT		83																		
R10	580	77+10.62 (I70)	77+88.62 (I70)	RT/LT		78																		
R12	580	77+10.62 (I70)	77+88.62 (I70)	RT/LT												78								
R13	580	77+10.62 (I70)	77+88.62 (I70)	RT/LT												78								
R14	580	78+84.34 (I70)	79+62.35 (I70)	RT/LT												78								
R15	580	78+84.34 (I70)	79+62.35 (I70)	RT/LT												78								
B2	580	78+84.34 (I70)	79+04.34 (I70)	RT/LT															20					
B3	580	79+14.35 (I70)	79+54.35 (I70)	RT/LT															40	2				
B4	580	77+18.62 (I70)	77+58.62 (I70)	RT/LT															40	2				
B5	580	77+68.62 (I70)	77+88.62 (I70)	RT/LT															20					
S2	580	78+84.34 (I70)	79+62.35 (I70)	RT/LT													99							
S3	580	77+18.62 (I70)	77+88.62 (I70)	RT/LT													99							
TOTALS CARRIED TO SUB-SUMMARY						281	100	392		1						312	198		120	4				

CALCULATED JAP
CHECKED TAZ

ESTIMATED QUANTITIES

FRA-70-14.54

581
2317

PLOT.CEL

ms consultants, inc.
msconsultants.com

CROSS REFERENCES	
SHEET NO	DESCRIPTION
	PROFILE(S)
674-675	TRANS I-70 EB (WEST SIDE)
1259B	STORM SEWER PROFILES
1141	GRADING DETAIL

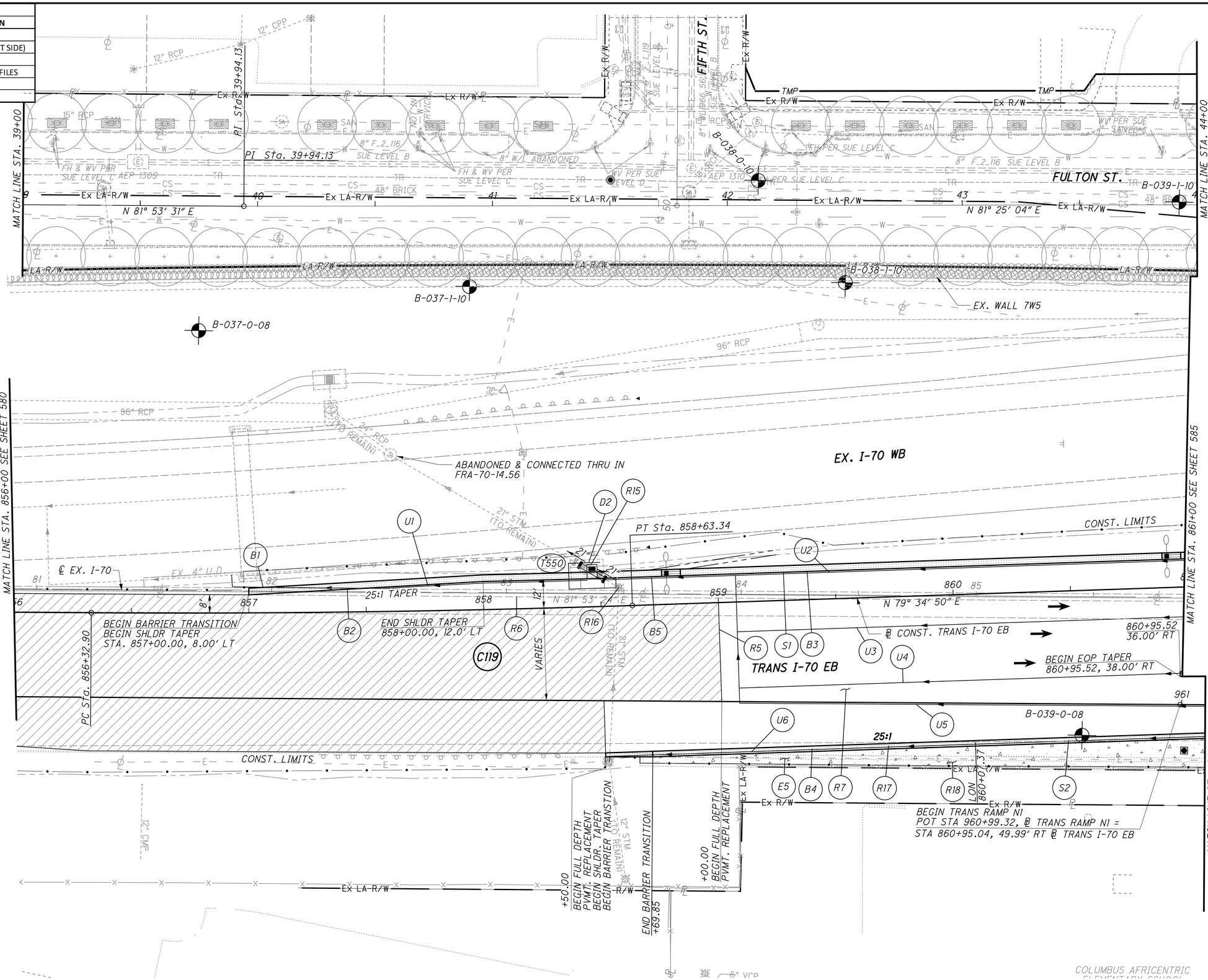

C119

P.I.= Sta. 857+48.14
Δ = 2° 18' 16" (LT)
Dc = 1° 00' 00"
R = 5,729.58'
T = 115.24'
L = 230.44'
E = 1.16'
PC = 856+32.90
PT = 858+63.34
V (des) = 55 MPH
e (max) = 0.023
WIDENING = N/A

HORIZONTAL SCALE IN FEET

CALCULATED

CHECKED

PLAN - I-70 EASTBOUND
STA. 856+00 TO STA. 861+00

FRA-70-14.54

ms consultants, inc.

Batchplot Spec: \\msconsultants.com\files\production\03\60\06634_2E\standards\plotdrv\batchplt.spc
Pen Table: N:\03\60\06634_2E\standards\tables\V8i_ms_std_06634_2D_Plan View.tbl
Plot Driver: \\msconsultants.com\files\Standards\ustn\ohdot\v8i\ms\plotting\PDF.pltcfg
Ohio DOT Workspace
70\71 East Interchange 2E
www.msconsultants.com
Model: Sheet
Printed: 6/19/2018 @ 8:28:35 AM
File: N:\03\60\06634_2E\roadway\sheets\105322GP002.dgn
View: FENCE_VIEW1
By: jdouglas
34" x 22"

PLOT.CEL

ms consultants, inc.
msconsultants.com

www.msconsultants.com

Ohio DOT Workspace
70\71 East Interchange 2E

1" 0.5" 0

DGN: ohdot\V8i
PCF: 60-06634_2E_Columbus

Batchplot Spec: \\msconsultants.com\files\production\03\60\06634_2E\standards\plotdrv\batchplt.spc
Pen Table: N:\03\60\06634_2E\standards\tables\V8i_ms_std_06634_2D_Plan View.tbl
Plot Driver: \\msconsultants.com\files\Standards\usetn\ohdot\v8i\ms\plotting\PDF.pltcfg

34" x 22"

Model: Sheet
Printed: 6/19/2018 @ 8:28:37 AM
File: N:\03\60\06634_2E\roadway\sheets\05322G0002.dgn
View: FENCE_VIEW1
By: jdouglas

CALCULATED JAP
CHECKED TAZ

ESTIMATED QUANTITIES

FRA-70-14.54

583
2317

REF. NO.	SHEET NO.	STATION FROM	STATION TO	SIDE	202 PAVEMENT REMOVED (SQ YD)	202 CONCRETE BARRIER REMOVED (FT)	202 CONCRETE SLOPE PROTECTION REMOVED (SQ YD)	202 PIPE REMOVED, 24" AND UNDER (FT)	202 CATCH BASIN REMOVED (EACH)	202 INLET ABANDONED (EACH)	252 FULL DEPTH PAVEMENT SAWING (FT)	512 SEALING OF CONCRETE SURFACES (SQ YD)
		TRANSITIONAL RAMP N1 - (TN1) TRANSITIONAL I-70 EB - (T70EB)										
R5	582	858+50.00 (T70EB)	859+00.00 (T70EB)	R/L							114	
R6	582	857+00.01 (T70EB)	860+98.18 (T70EB)	L/R		398						
R7	582	856+86.63 (T70EB)	861+06.20 (T70EB)	RT	1409							
R15	582	858+44.57 (T70WB)		LT				12	1			
R16	582	858+57.86 (T70WB)		LT						1		
R17	582	858+50.00 (T70EB)	961+10.00 (TN1)	RT		256						
R18	582	858+50.00 (T70EB)	961+10.00 (TN1)	RT			63					
S1	582	856+99.93 (T70EB)	860+99.19 (T70EB)	LT								521
S2	582	858+50.00 (T70EB)	961+10.00 (TN1)	RT								228
TOTALS CARRIED TO SUB-SUMMARY					1409	654	63	12	1	1	114	749

PLOT.CEL
ms consultants, inc.
msconsultants.com
www.msconsultants.com
Ohio DOT Workspace
70\71 East Interchange 2E
1"
0.5"
0
Batchplot Spec: \\msconsultants.com\files\production\Q3\60\06634_2E\standards\plotdrv\batchplt.spc
Pen Table: N:\Q3\60\06634_2E\standards\tables\V8i_ms_std_06634_2D_Plan View_NoClouds.tbl
Plot Driver: \\msconsultants.com\files\Standards\ustn\ohdot\v8i\ms\plotting\PDF.pltcfg
PDF: ohdot\V8i
PDF: 60-06634_2E_Columbus
Model: Sheet
Printed: 10/24/2018 @ 1:36:48 PM
File: N:\Q3\60\06634_2E\roadway\sheets\1053220002A.dgn
View: FENCE_VIEW1
By: tarendinger
34" x 22"

REF. NO.	SHEET NO.	STATION FROM	STATION TO	SIDE	601 CONCRETE SLOPE PROTECTION SQ YD	601 RIP RAP, TYPE D, AS PER PLAN SQ YD				611 21" CONDUIT, TYPE B FT		611 INLET, NO. 3 FOR SINGLE SLOPE BARRIER, TYPE C1 EACH			622 CONCRETE BARRIER, SINGLE SLOPE, TYPE B FT	622 CONCRETE BARRIER, SINGLE SLOPE, TYPE B1 FT	622 CONCRETE BARRIER, SINGLE SLOPE, TYPE C1 FT	622 BARRIER TRANSITION EACH	622 CONCRETE BARRIER, END ANCHORAGE, REINFORCED, TYPE B1 EACH	622 CONCRETE BARRIER, END ANCHORAGE, REINFORCED, TYPE C1 EACH	626 BARRIER REFLECTOR, TYPE 1, BI-DIRECTIONAL EACH	626 BARRIER REFLECTOR, TYPE 1, ONE WAY EACH			
		TRANSITIONAL RAMP N1 (TN1) TRANSITIONAL I-70 EB - (T70EB)																								
D2	582	858+41.54 (T70EB)	858+51.72 (T70EB)	LT		10				12		1														
B1	584	857+00.00 (T70EB)	857+20.00 (T70EB)	LT														1			1					
B2	584	857+20.00 (T70EB)	858+76.24 (T70EB)	LT													86			2	1					
B3	584	858+84.24 (T70EB)	860+89.42 (T70EB)	LT												161	13		1	1	2					
B4	584	858+50.00 (T70EB)	961+10.00 (TN1)	RT											236			1				4				
B5	584	858+56.65 (T70EB)	858+76.24 (T70EB)	LT																2						
E5	584	858+50.00 (T70EB)	961+10.00 (TN1)	RT	200																					
TOTALS CARRIED TO SUB-SUMMARY					200	10				12		1			236	161	99	2	1	5	4	4				

CALCULATED JAP
CHECKED TAZ

ESTIMATED QUANTITIES

FRA-70-14.54

584
2317

PLOT.CEL

ms consultants, inc.
msconsultants.com

CROSS REFERENCES	
SHEET NO	DESCRIPTION
	PROFILE(S)
674-675	TRANS I-70 EB (WEST SIDE)
699	TRANS RAMP N1
1152-1153	GORE DETAILS
1259A	STORM SEWER PROFILES
1141-1142	GRADING DETAIL

Ohio DOT Workspace
70\71 East Interchange 2E
www.msconsultants.com

DGN: ohdot\V8i
PCF: 60-06634_2E_Columbus

Batchplot Spec: \\msconsultants.com\files\production\03\60\06634_2E\standards\plotdr\batchplt.spc
Pen Table: N:\03\60\06634_2E\standards\tables\V8i_ms_std_06634_2D_Plan View.tbl
Plot Driver: \\msconsultants.com\files\Standards\ustn\ohdot\v8i\ms\plotting\PDF.pltcfg

Model: Sheet
Printed: 6/19/2018 @ 8:29:19 AM
File: N:\03\60\06634_2E\roadway\sheets\105220P003.dgn
View: FENCE_VIEW1
By: jdouglas

34" x 22"

C120

P.I.= Sta. 862+81.18
Δ = 3° 25′ 10″ (RT)
Dc = 1° 00′ 00″
R = 5,729.58′
T = 171.03′
L = 341.96′
E = 2.55′
PC = 861+10.15
PT = 864+52.11
V (des) = 55 MPH
e (max) = 0.023
WIDENING = N/A

C121

P.I.= Sta. 963+29.46
Δ = 6° 19′ 42″ (RT)
Dc = 3° 45′ 00″
R = 1,527.89′
T = 84.47′
L = 168.76′
E = 2.33′
PC = 962+44.99
PT = 964+13.75
V (des) = 55 MPH
e (max) = 0.056
WIDENING = N/A

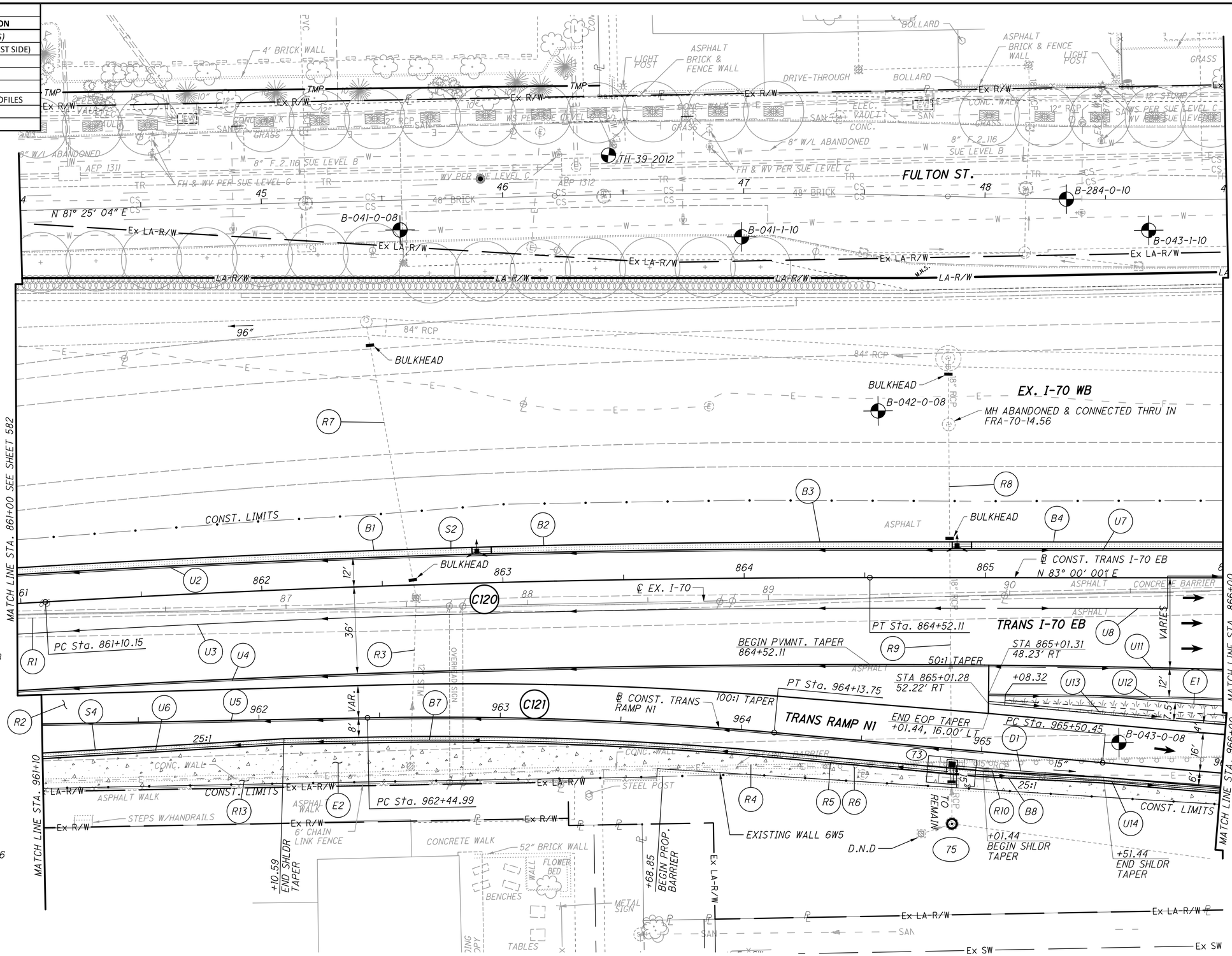

N

HORIZONTAL SCALE IN FEET
0 10 20 40

CALCULATED | CHECKED

PLAN - TRANS I-70 EASTBOUND
STA. 861+00 TO STA. 866+00

FRA-70-14.54

585
2317

PLOT.CEL

ms consultants, inc.
msconsultants.com

www.msconsultants.com

Ohio DOT Workspace
70\71 East Interchange 2E

1" 0.5" 0

ODF: ohdot\V8i
PCF: 60-06634_2E_Columbus

34" x 22"

Batchplot Spec: \\msconsultants.com\files\production\03\60\06634_2E\standards\plotdr\batchplt.spc
Pen Table: N:\03\60\06634_2E\standards\tables\V8i_ms_std_06634_2D_Plan View.tbl
Plot Driver: \\msconsultants.com\files\Standards\usetn\ohdot\v8i\ms\plotting\PDF.pltcfg

Model: Sheet
Printed: 6/19/2018 @ 8:29:21 AM View: FENCE_VIEW1
File: N:\03\60\06634_2E\roadway\sheets\05322G0003.dgn By: jdouglas

CALCULATED JAP
CHECKED TAZ

ESTIMATED QUANTITIES

FRA-70-14.54

586
2317

REF. NO.	SHEET NO.	STATION FROM	STATION TO	SIDE	202 PAVEMENT REMOVED (SQ YD)	202 CONCRETE BARRIER REMOVED (FT)	202 CURB REMOVED (FT)	202 CONCRETE SLOPE PROTECTION REMOVED (SQ YD)	202 PIPE REMOVED, 24" AND UNDER (FT)	202 INLET REMOVED (EACH)	202 GUARDRAIL REMOVED (FT)	SPECIAL - FILL AND PLUG EXISTING CONDUIT (FT)	202 MANHOLE REMOVED (EACH)	202 CATCH BASIN REMOVED (EACH)
		TRANSITIONAL RAMP N1 - (TN1) TRANSITIONAL I-70 WB - (T70WB) TRANSITIONAL I-70 EB - (T70EB)												
R1	585	860+98.18 (T70EB)	865+98.41 (T70EB)	RT		500								
R2	585	860+97.67 (T70EB)	865+98.41 (T70EB)	RT	2722									
R3	585	862+59.03 (T70EB)	862+63.87 (T70EB)	RT					70	1				
R4	585	961+10.00 (TN1)	964+18.01 (TN1)	RT		325								
R5	585	964+18.01 (TN1)	966+00.00 (TN1)	R/L			167							
R6	585	964+18.01 (TN1)	966+00.00 (TN1)	R/L							167			
R7	585	862+47.28 (T70EB)	862+63.87 (T70EB)	RT/LT						1		114		
R8	585	864+85.31 (T70EB)		LT								73		
R9	585	864+85.31 (T70EB)		RT/LT					95				1	
R10	585	964+88.14 (TN1)	965+25.89 (TN1)	RT					38					1
R13	585	961+10.00 (TN1)	963+66.29 (TN1)	RT				71						
TOTALS CARRIED TO SUB-SUMMARY					2722	825	167	71	203	2	167	187	1	1

PLOT.CEL

ms consultants, inc.
msconsultants.com

www.msconsultants.com
70\71 East Interchange 2E
Ohio DOT Workspace

1" 0.5" 0

Batchplot Spec: \\msconsultants.com\files\production\03\60\06634_2E\standards\plotdrv\batchplt.spc
Pen Table: N:\03\60\06634_2E\standards\tables\V8i_ms_std_06634_2D_Plan View_NoClouds.tbl
Plot Driver: \\msconsultants.com\files\Standards\ustn\ohdot\v8i\ms\plotting\PDF.pltcfg
PDF: ohdot\V8i
PDF: 60-06634_2E_Columbus

Model: Sheet
Printed: 10/24/2018 @ 1:36:58 PM
File: N:\03\60\06634_2E\roadway\sheets\1053220Q003A.dgn
View: FENCE_VIEW1
By: hbrendinger

34" x 22"

REF. NO.	SHEET NO.	STATION FROM	STATION TO	SIDE	512 SEALING OF CONCRETE SURFACES	601 CONCRETE SLOPE PROTECTION	611 15" CONDUIT, TYPE B		611 15" CONDUIT, TYPE C, 706.02	611 INLET, NO. 3 FOR SINGLE SLOPE BARRIER, TYPE B			622 CONCRETE BARRIER, SINGLE SLOPE, TYPE B	622 CONCRETE BARRIER, SINGLE SLOPE, TYPE D	622 CONCRETE BARRIER, END ANCHORAGE, REINFORCED, TYPE D	622 CONCRETE BARRIER, SINGLE SLOPE, TYPE B1	622 CONCRETE BARRIER, SINGLE SLOPE, TYPE C1	622 CONCRETE BARRIER, END ANCHORAGE, REINFORCED, TYPE B1	622 CONCRETE BARRIER, END ANCHORAGE, REINFORCED, TYPE C1	622 CONCRETE BARRIER, END ANCHORAGE, REINFORCED, TYPE B	626 BARRIER REFLECTOR, TYPE 1, BI-DIRECTIONAL	670 DITCH EROSION PROTECTION MAT, TYPE B	626 BARRIER REFLECTOR, TYPE 1, ONE-WAY		
		TRANSITIONAL RAMP N1 - (TN1) TRANSITIONALI - 70 EB - (T70EB) TRANSITIONAL I - 70 WB - (T70WB) RAMP N1 - (N1)																							
					SQ YD	SQ YD	FT		FT	EACH			FT	FT	EACH	FT	FT	EACH	EACH	EACH	EACH	SQ YD	EACH		
D1	585, 616	964+88.33 (TN1)	966+57.69 (TN1)	RT			169		7	1															
B1	585	860+97.42 (T70EB)	862+87.53 (T70EB)	LT												161		2			3				
B2	585	862+95.51 (T70EB)	864+12.50 (T70EB)	LT												102		1			2				
B3	585	864+12.50 (T70EB)	864+86.25 (T70EB)	LT													59		1		1				
B4	585	864+94.25 (T70EB)	865+98.41 (T70EB)	LT													89		1		2				
B7	585	961+10.00 (TN1)	964+78.29 (TN1)	RT									353							1			5		
B8	585	964+98.29 (TN1)	966+00.00 (TN1)	RT									87							1			2		
E1	585	965+07.77 (TN1)	966+00.00 (TN1)	LT																		70			
E2	585	961+10.00 (TN1)	966+00.00 (TN1)	RT		580																			
S2	585	860+99.06 (T70EB)	865+98.41 (T70EB)	LT	641																				
S4	585	961+10.00 (TN1)	966+00.00 (TN1)	RT	418																				
TOTALS CARRIED TO SUB-SUMMARY					1059	580	169		7	1			440	0	0	263	148	3	2	2	8	70	7		

CALCULATED JAP
CHECKED TAZ

ESTIMATED QUANTITIES

FRA-70-14.54

587
2317

ms consultants, inc.

PLOT.CEL

ms consultants, inc.
msconsultants.com

CROSS REFERENCES	
SHEET NO	DESCRIPTION
	PROFILE(S)
676-681	I-70 EB
684-685	TRANS I-70 WB (CENTRAL)
704-706	RAMP N3
713-715	TRANS I-71 SB (WEST SIDE)
733	GRANT AVE. PLAN
1094	INTERSECTION DETAIL
1132	PAVEMENT DETAIL
1257D,1259 1259F	STORM SEWER PROFILES
1142	GRADING DETAIL

Ohio DOT Workspace
70\71 East Interchange 2E
www.msconsultants.com

Batchplot Spec: \\msconsultants.com\files\production\03\60\06634_2E\standards\plotdrv\batchplt.spc
Pen Table: N:\03\60\06634_2E\standards\tables\V8i_ms_std_06634_2D_Plan View.tbl
Plot Driver: \\msconsultants.com\files\Standards\ustn\ohdot\v8i\ms\plotting\PDF.pltcfg

34" x 22"

Model: Sheet
Printed: 9/13/2018 @ 1:52:40 PM
File: N:\03\60\06634_2E\roadway\sheets\105322GP004.dgn
View: FENCE_VIEW1
By: hbrendlinger

C2

P.I. STA. 769+79.64
Δ = 2° 00′ 00″ (LT)
Dc = 0° 28′ 00″
R = 12,277.67′
T = 214.31′
L = 428.57′
E = 1.87′
PC = 767+65.33
PT = 771+93.90
V (des) = 60 MPH
e (max) = NC
WIDENING = N/A

C62

P.I. STA. 870+55.11
Δ = 3° 10′ 16″ (LT)
Dc = 0° 35′ 00″
R = 9,822.13′
T = 271.88′
L = 543.62′
E = 3.76′
PC = 867+83.23
PT = 873+26.85
V (des) = 50 MPH
e (max) = NC
WIDENING = N/A

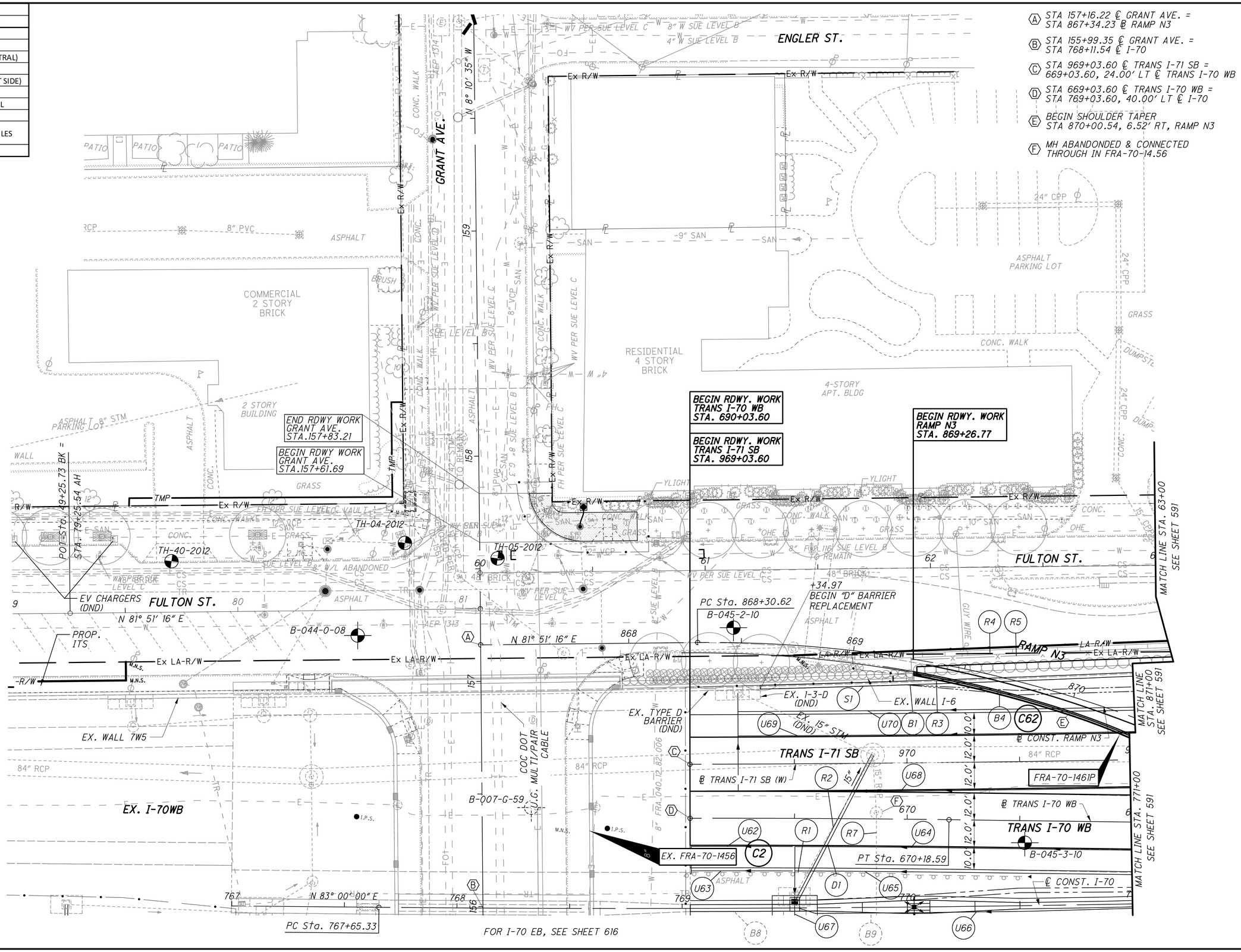

Ⓐ STA 157+16.22 ℄ GRANT AVE. = STA 867+34.23 ℄ RAMP N3

Ⓑ STA 155+99.35 ℄ GRANT AVE. = STA 768+11.54 ℄ I-70

Ⓒ STA 969+03.60 ℄ TRANS I-71 SB = 669+03.60, 24.00′ LT ℄ TRANS I-70 WB

Ⓓ STA 669+03.60 ℄ TRANS I-70 WB = STA 769+03.60, 40.00′ LT ℄ I-70

Ⓔ BEGIN SHOULDER TAPER STA 870+00.54, 6.52′ RT, RAMP N3

Ⓕ MH ABANDONDED & CONNECTED THROUGH IN FRA-70-14.56

HORIZONTAL SCALE IN FEET 0 10 20 40

CALCULATED
CHECKED

PLAN - TRANS I-70 WESTBOUND
STA. 669+03.60 TO STA. 671+00

FRA-70-14.54

ms consultants, inc.

PLOT.CEL

ms consultants, inc.
msconsultants.com

www.msconsultants.com
Ohio DOT Workspace
70\71 East Interchange 2E

1" 0.5" 0

Batchplot Spec: \\msconsultants.com\files\production\03\60\06634_2E\standards\plotdrv\batchplt.spc
Pen Table: N:\03\60\06634_2E\standards\tables\V8i_ms_std_06634_2D_Plan View_NoClouds.tbl
Plot Driver: \\msconsultants.com\files\Standards\ustn\ohdot\v8i\ms\plotting\PDF.pltcfg
PDF: ohdot\V8i
PDF: 60-06634_2E_Columbus

Model: Sheet
Printed: 10/24/2018 @ 1:37:08 PM
File: N:\03\60\06634_2E\roadway\sheets\1053220004.dgn
View: FENCE_VIEW1
By: hbrendinger

34" x 22"

REF. NO.	SHEET NO.	STATION FROM	STATION TO	SIDE		202 CONCRETE BARRIER REMOVED FOR STORAGE FT	202 FENCE REMOVED FT	202 PIPE REMOVED, 24" AND UNDER FT	202 GUARDRAIL REMOVED FT	202 INLET REMOVED EACH	202 CONCRETE BARRIER REMOVED FT	512 SEALING OF CONCRETE SURFACES SQ YD	622 CONCRETE BARRIER, SINGLE SLOPE, TYPE D, AS PER PLAN "D" FT	622 CONCRETE BARRIER, END ANCHORAGE, REINFORCED, TYPE D EACH	626 BARRIER REFLECTOR, TYPE 1, BI-DIRECTIONAL EACH
		I-70 - (I70) TRANSITIONAL I-70 WB - (T70WB) TRANSITIONALI-71SB - (T71SB) RAMP N3 - (N3)													
R1	588	669+03.60 (T70WB)	670+53.94 (T70WB)	RT					155						
R2	588	669+50.00 (T70WB)	669+84.45 (T70WB)	LT/RT				71		1					
R3	588	969+34.97 (T71SB)	971+01.04 (T71SB)	LT							166				
R4	588	869+01.00 (N3)	870+31.62 (N3)	RT/LT		140									
R5	588	869+26.73 (N3)	870+31.62 (N3)	RT/LT			119								
R7	588	769+85.20 (I70)	769+86.24 (I70)	LT				68							
B1	588	969+34.97 (T71SB)	971+01.04 (T71SB)	LT									151	1	
B4	588	869+26.81 (N3)	870+28.71 (N3)	RT											2
S1	588	969+03.60 (T71SB)	971+00.00 (T71SB)	LT								149			
TOTALS CARRIED TO SUB-SUMMARY						140	119	139	155	1	166	149	151	1	2

CALCULATED JAP
CHECKED TAZ

ESTIMATED QUANTITIES

FRA-70-14.54

589
2317

PLOT.CEL

ms consultants, inc.
msconsultants.com

www.msconsultants.com
Ohio DOT Workspace
70\71 East Interchange 2E

1"
0.5"
0

ODF: ohdot\V8i
PCF: 60-06634_2E_Columbus

Batchplot Spec: \\msconsultants.com\files\production\03\60\06634_2E\standards\plotdr\batchplt.sbc
Pen Table: N:\03\60\06634_2E\standards\tables\V8i_ms_std_06634_2D_Plan View.tbl
Plot Driver: \\msconsultants.com\files\Standards\ustn\ohdot\v8i\ms\plotting\PDF.pltcfg

Model: Sheet
Printed: 8/1/2018 @ 2:05:31 PM View: FENCE_VIEW1
File: N:\03\60\06634_2E\roadway\sheets\1053220004A.dgn By: jdougas

34" x 22"

REF. NO.	SHEET NO.	STATION FROM	STATION TO	SIDE	611 15" CONDUIT, TYPE B FT				611 INLET, NO. 3 FOR SINGLE SLOPE BARRIER, TYPE C1 EACH	601 RIP RAP, TYPE D, AS PER PLAN SQ YD															
		TRANSITIONAL I-71 SB - (T71SB) TRANSITIONAL I-70 WB - (T70WB) INTERSTATE 70 - (I70) RAMP Q4 - (Q4)																							
D1	588	769+50.00 (I70)	969+84.74 (T71SB)	LT	75				1	10															
TOTALS CARRIED TO SUB-SUMMARY					75				1	10															

CALCULATED JAP
CHECKED TAZ

ESTIMATED QUANTITIES

FRA-70-14.54

590
2317

PLOT.CEL

ms consultants, inc.
msconsultants.com

www.msconsultants.com

Ohio DOT Workspace
70\71 East Interchange 2E

ODF: ohdot\V8i
PCF: 60-06634_2E_Columbus

Batchplot Spec: \\msconsultants.com\files\production\03\60\06634_2E\standards\plotdrv\batchplt.spc
Pen Table: N:\03\60\06634_2E\standards\tables\V8i_ms_std_06634_2D_Plan View.tbl
Plot Driver: \\msconsultants.com\files\Standards\usetn\ohdot\v8i\ms\plotting\PDF.pltdrv

Model: Sheet
Printed: 6/19/2018 @ 8:30:48 AM View: FENCE_VIEW1
File: N:\03\60\06634_2E\roadway\sheets\05322GP005.dgn By: jdougas

34" x 22"

CROSS REFERENCES	
SHEET NO	DESCRIPTION
	PROFILE(S)
676-681	I-70 EB
684-685	TRANS I-70 WB (CENTRAL)
704-706	*RAMP N3*
713-715	TRANS I-71 SB (WEST SIDE)
1132-1133	PAVEMENT DETAIL
1159-1160	GORE DETAILS
1257,1257D-F	STORM SEWER PROFILES
1143	GRADING DETAIL

C63

P.I.Sta. 971+27.14
Δ = 2° 05′ 49″ (LT)
Dc = 0° 28′ 09″
R = 12,213.67′
T = 223.54′
L = 447.02′
E = 2.05′
PC = 969+03.60
PCC = 973+50.62
V (des) = 55 MPH
e (max) = NC
WIDENING = N/A

ENGLER ST

FULTON ST.

Ⓐ END SHOULDER TAPER
STA. 871+23.20, 14.43′ RT, RAMP N3

Ⓑ STA 772+51.48, ℄ I-70 =
STA 871+98.95, ℄ RAMP N3

COMMERCIAL
2 STORY
BRICK

COMMERCIAL
BUILDING

ASPHALT
PARKING LOT

GRAVEL
LOT

CONC. WALK

GRASS

STEPS

CONCRETE

48" BRICK

12" RCP

8" VCP

8" STM

6' CHAIN LINK

TRANS I-71 SB (W)

TRANS I-70 WB

RAMP N3

EX. WALL I-6B-2

CONST. LIMITS

MATCH LINE STA. 63+00

MATCH LINE STA. 971+00
SEE SHEET 588

MATCH LINE STA. 771+00
SEE SHEET 588

MATCH LINE STA. 976+00
SEE SHEET 594

MATCH LINE STA. 776+00
SEE SHEET 594

PC Sta. 67+86.38

PT Sta. 771+93.90

PT Sta. 871+32.01

PCC Sta. 973+50.62

PC Sta. 673+33.75

N 81° 50′ 30″ E

N 83° 13′ 02″ E

FRA-70-1461P

B-285-0-10
B-047-1-10
B-164-1-10
B-164-0-09
B-001-W-62
B-047-2-10
B-047-6-10

℄ CONST. I-70

℄ CONST. RAMP N3

℄ CONST. TRANS I-71 SB (W)

℄ CONST. TRANS I-70 WB

FOR RAMP N3 CONTINUATION AND I-70 EB, SEE SHEET 620

HORIZONTAL SCALE IN FEET
0 10 20 40

CALCULATED | CHECKED

PLAN - I-70 WESTBOUND
STA. 771+00 TO STA. 776+00

FRA-70-14.54

591
2317

ms consultants, inc.

PLOT.CEL

ms consultants, inc.
msconsultants.com

www.msconsultants.com

Ohio DOT Workspace
70\71 East Interchange 2E

1" 0.5" 0

Batchplot Spec: \\vnsconsultants.com\Files\production\Q3\60\06634_2E\standards\plotdrv\batchplt.spc
Pen Table: N:\03\60\06634_2E\standards\tables\V8i_ms_std_06634_2D_Plan View_NoClouds.tbl
Plot Driver: \\vnsconsultants.com\Files\Standards\ustn\ohdot\v8i\ms\plotting\PDF.pltcfg

Model: Sheet
Printed: 10/24/2018 @ 1:37:19 PM
File: N:\03\60\06634_2E\roadway\sheets\V05320Q0005.dgn

View: FENCE_VIEW1
By: hbrendlinger

34" x 22"

REF. NO.	SHEET NO.	STATION FROM	STATION TO	SIDE	202 FENCE REMOVED FT	202 CONCRETE BARRIER REMOVED FOR STORAGE FT	202 CONCRETE BARRIER REMOVED FT	202 PIPE REMOVED, 24" AND UNDER FT	202 GUARDRAIL REMOVED FT	202 CATCH BASIN REMOVED EACH	202 INLET REMOVED EACH	202 MANHOLE REMOVED EACH	626 BARRIER REFLECTOR, TYPE 1, BI-DIRECTIONAL EACH	512 SEALING OF CONCRETE SURFACES SQ YD	601 CONCRETE SLOPE PROTECTION SQ YD	606 MGS BRIDGE TERMINAL ASSEMBLY, TYPE 2 EACH	606 GUARDRAIL, TYPE MGS FT	606 ANCHOR ASSEMBLY, MGS TYPE T EACH	606 MGS BRIDGE TERMINAL ASSEMBLY, TYPE 1 EACH	622 CONCRETE BARRIER, SINGLE SLOPE, TYPE D FT	622 CONCRETE BARRIER END SECTION, TYPE D EACH	622 CONCRETE BARRIER, END ANCHORAGE, REINFORCED, TYPE D EACH	622 CONCRETE BARRIER, SINGLE SLOPE, TYPE C FT	622 CONCRETE BARRIER, SINGLE SLOPE, TYPE D, AS PER PLAN "D" FT	622 CONCRETE BARRIER, END ANCHORAGE, REINFORCED, TYPE C EACH	626 BARRIER REFLECTOR, TYPE 1, ONE-WAY EACH	626 BARRIER REFLECTOR, TYPE 2, ONE-WAY EACH	626 BARRIER REFLECTOR, TYPE 2, BI-DIRECTIONAL EACH
		I-70 - (I70) TRANS I-71 SB (T71SB) TRANS I-70WB (T70WB) RAMP N3 - (N3)																											
R1	591	972+62.48 (T71SB)	976+05.58 (T71SB)	LT					340																				
R2	591	870+31.62 (N3)	870+78.44 (N3)	RT		60																							
R3	591	870+31.62 (N3)	870+82.71 (N3)	RT	62																								
R4	591	971+01.04 (T71SB)	972+74.97 (T71SB)	LT			173																						
R7	591	972+46.04 (T71SB)	972+82.32 (T71SB)	LT				80		1																			
R8	591	674+51.34 (T70WB)	674+62.13 (T70WB)	RT				11		1																			
R9	591	974+54.10 (T71SB)	674+59.55 (T70WB)	LT				58			1	1																	
R10	591	974+54.10 (T71SB)	976+02.30 (T71SB)	LT				148			1																		
R12	591	673+77.67 (T70WB)	674+84.67 (T70WB)	RT				112				1																	
R13	591	673+69.54 (T70WB)	673+83.50 (T70WB)	LT				6		1																			
B1	591	975+08.82 (T71SB)	976+03.53 (T71SB)	LT																61	1						1		
B2	591	675+25.00 (T70WB)	676+04.51 (T70WB)	LT									1										29			2	1		
B3	591	671+75.00 (T70WB)	675+25.00 (T70WB)	RT									5							304	1	1							
B4	591	870+28.71 (N3)	871+84.02 (N3)	RT									3																
B5	591	870+73.42 (N3)	872+81.30 (N3)	LT									3																
B6	591	971+01.04 (T71SB)	972+86.23 (T71SB)	LT																		1			170				
G1	591	675+25.00 (T70WB)	675+98.32 (T70WB)	RT													50		1										2
G2	591	972+84.91 (T71SB)	975+08.82 (T71SB)	LT												1	200	1										6	
S1	591	975+08.82 (T71SB)	976+03.53 (T71SB)	LT										86															
S2	591	675+25.00 (T70WB)	676+04.51 (T70WB)	LT										90															
S3	591	671+75.00 (T70WB)	675+25.00 (T70WB)	RT										319															
S6	591	971+01.04 (T71SB)	972+86.23 (T71SB)	LT										169															
E1	591	671+75.00 (T70WB)	673+31.49 (T70WB)	RT											59														
E2	591	674+55.11 (T70WB)	675+04.39 (T70WB)	RT											13														
TOTALS CARRIED TO SUB-SUMMARY					62	60	173	415	340	3	2	2	12	664	72	1	250	1	1	365	2	2	29	170	2	2	6	2	

CALCULATED JAP
CHECKED TAZ

ESTIMATED QUANTITIES

FRA-70-14.54

592
2317

ms consultants, inc.

PLOT.CEL

ms consultants, inc.
msconsultants.com

www.msconsultants.com
Ohio DOT Workspace
70\71 East Interchange 2E

1" 0.5" 0

DGN: ohdot\V8i
PCF: 60-06634_2E_Columbus

34" x 22"

Batchplot Spec: \\msconsultants.com\files\production\03\60\06634_2E\standards\plotdrv\batchplt.spc
Pen Table: N:\03\60\06634_2E\standards\tables\V8i_ms_std_06634_2D_Plan View.tbl
Plot Driver: \\msconsultants.com\files\Standards\ustn\ohdot\v8i\ms\plotting\PDF.pltcfg

Model: Sheet
Printed: 6/19/2018 @ 8:31:04 AM
File: N:\03\60\06634_2E\roadway\sheets\05322G0005A.dgn
View: FENCE_VIEW1
By: jdougas

CALCULATED JAP
CHECKED TAZ

ESTIMATED QUANTITIES

FRA-70-14.54

593
2317

REF. NO.	SHEET NO.	STATION FROM	STATION TO	SIDE		611 15" CONDUIT, TYPE B	611 6" CONDUIT, TYPE B	611 INLET, NO. 3 FOR SINGLE SLOPE BARRIER, TYPE C	611 MANHOLE, NO. 3	611 INLET, NO. 3 FOR SINGLE SLOPE BARRIER, TYPE C1	611 INLET, NO. 3 FOR SINGLE SLOPE BARRIER, TYPE D		611 MANHOLE RECONSTRUCTED TO GRADE, AS PER PLAN		SPECIAL TRENCH DRAIN WITH STANDARD GRATE
		TRANS I-71 SB (T71SB) TRANS I-70 WB (T70WB) INTERSTATE 70 - (I70) RAMP Q1 - (Q1) RAMP Q4 - (Q4)				FT	FT	EACH	EACH	EACH	EACH		EACH		FT
D1	591	671+85.00 (T70WB)	672+51.76 (T70WB)	LT/RT		77					1				
D2	591	672+51.76 (T70WB)	675+25.00 (T70WB)	LT/RT			6		1						267
D3	591	972+51.56 (T71SB)	972+82.32 (T71SB)	RT		35							1		
D4	591	673+77.67 (T70WB)	675+13.98 (T70WB)	LT/RT		144				1					
D5	591	675+13.98 (T70WB)	675+50.00 (T70WB)	LT/RT		60		1							
D6	591	675+50.00 (T70WB)	975+34.15 (T71SB)	LT/RT		46					1				
TOTALS CARRIED TO SUB-SUMMARY						362	6	1	1	1	2		1		267

PLOT.CEL

ms consultants, inc.
msconsultants.com

CROSS REFERENCES	
SHEET NO	DESCRIPTION
	PROFILE(S)
684-685	TRANS I-70 WB (CENTRAL)
713-715	TRANS I-71 SB (WEST SIDE)
1133-1134	PAVEMENT DETAIL
1160	GORE DETAILS
1257D-F	STORM SEWER PROFILES
1143	GRADING DETAIL

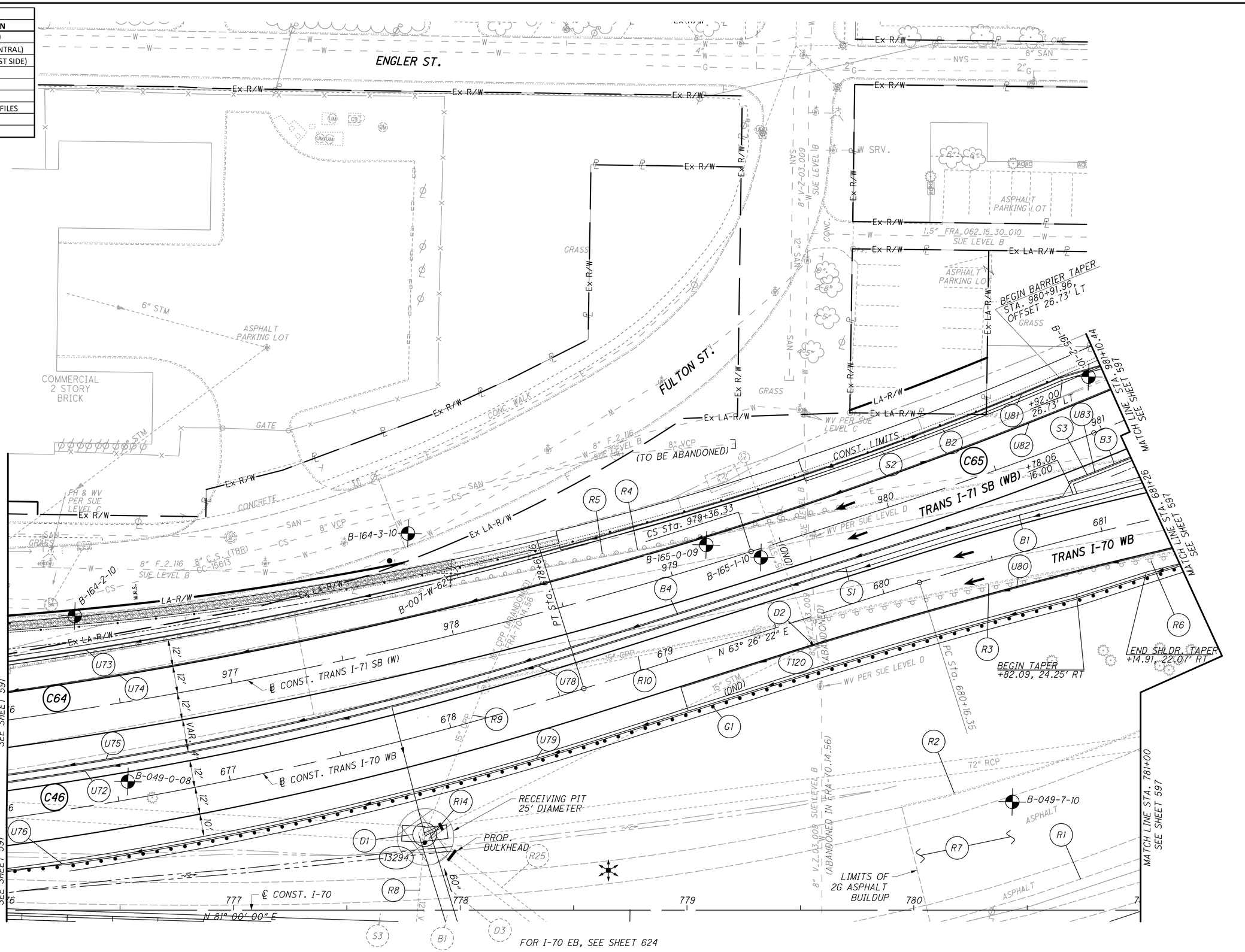

C46

P.I.Sta. 676+00.11
Δ = 19° 46' 40" (LT)
Dc = 3° 45' 00"
R = 1,527.89'
T = 266.35'
L = 527.41'
E = 23.04'
PC = 673+33.75
PT = 678+61.16
V (des) = 50
e (max) = 0.050
WIDENING = N/A

C64

P.I.Sta. 976+45.61
Δ = 16° 52' 52" (LT)
Dc = 2° 52' 56"
R = 1,987.93'
T = 294.99'
L = 585.71'
E = 21.77'
PCC = 973+50.62
CS = 979+36.33
V (des) = 55 MPH
e (max) = 0.0488
WIDENING = N/A

C65

P.I. STA. 980+43.03
Ls = 160.00'
f s = 4° 24' 00"
LT = 106.70'
ST = 53.36'
x = 159.91'
y = 4.09'
k = 79.98'
p = 1.02'
CS = 979+36.33
SC = 980+96.33

HORIZONTAL SCALE IN FEET

CALCULATED

CHECKED

PLAN - I-70 WESTBOUND
STA. 776+00 TO STA. 781+00

FRA-70-14.54

ms consultants, inc.

PLOT.CEL

ms consultants, inc.
msconsultants.com

Ohio DOT Workspace
70\71 East Interchange 2E
www.msconsultants.com

Batchplot Spec: \\msconsultants.com\files\production\03\60\06634_2E\standards\plotdrv\batchplt.spc
Pen Table: N:\03\60\06634_2E\standards\tables\V8i_ms_std_06634_2D_Plan View_NoClouds.tbl
Plot Driver: \\msconsultants.com\files\Standards\ustn\ohdot\v8i\ms\plotting\PDF.pltcfg
VDF: ohdotV8i
PCF: 60-06634_2E_Columbus

34" x 22"

View: FENCE_VIEW1
By: hbrendlinger
Model: Sheet
Printed: 10/24/2018 @ 1:37:29 PM
File: N:\03\60\06634_2E\roadway\sheets\105322G0006.dgn

REF. NO.	SHEET NO.	STATION I-70 - (I70) TRANS I-70 WB (T70WB) TRANS I-71 SB (T71SB) FROM	TO	SIDE	202 PAVEMENT REMOVED SQ YD	202 CURB REMOVED FT	202 PIPE REMOVED, 24" AND UNDER FT		202 GUARDRAIL REMOVED FT	202 MANHOLE REMOVED EACH		202 INLET REMOVED EACH	202 MANHOLE REMOVED, AS PER PLAN EACH		202 CONCRETE BARRIER REMOVED FT	512 SEALING OF CONCRETE SURFACES SQ YD	606 GUARDRAIL, TYPE MGS FT	626 BARRIER REFLECTOR, TYPE 1, ONE-WAY EACH	622 CONCRETE BARRIER, SINGLE SLOPE, TYPE D FT	622 CONCRETE BARRIER, END ANCHORAGE, REINFORCED, TYPE D EACH	622 CONCRETE BARRIER, SINGLE SLOPE, TYPE C FT	622 CONCRETE BARRIER, SINGLE SLOPE, TYPE C, AS PER PLAN, "B" FT	626 BARRIER REFLECTOR, TYPE 1, BI-DIRECTIONAL EACH	622 CONCRETE BARRIER, END ANCHORAGE, REINFORCED, TYPE C EACH	626 BARRIER REFLECTOR, TYPE 2, BI-DIRECTIONAL EACH
R1	594	780+12.04 (I70)	781+00.00 (I70)	R/L											93										
R2	594	779+94.60 (I70)	781+00.00 (I70)	LT		111																			
R3	594	977+33.35 (T71SB)	681+29.17 (T70WB)	L/R		386																			
R4	594	976+03.07 (T71SB)	981+07.19 (T71SB)	L/R		504																			
R5	594	976+03.07 (T71SB)	979+81.87(T71SB)	L/R					375																
R6	594	679+65.54 (T70WB)	681+29.39 (T70WB)	RT					163																
R7	594	779+96.87 (I70)	781+00.00 (I70)	LT	413																				
R8	594	777+81.16 (I70)	777+84.34 (I70)	LT			34																		
R9	594	677+77.13 (T70WB)	678+18.88 (T70WB)	RT/LT			132			1															
R10	594	678+18.88 (T70WB)	679+41.88 (T70WB)	LT			123					1													
R14	594	777+84.34 (I70)		LT									1												
B1	594	679+91.39 (T70WB)	681+22.10 (T70WB)	LT														4				132	4		
B2	594	976+03.53 (T71SB)	981+10.44 (T71SB)	LT														6			499				
B3	594	980+78.06 (T71SB)	981+10.45 (T71SB)	RT															21	1			2		
B4	594	676+04.51 (T70WB)	679+91.39 (T70WB)	LT														5			369		5	1	
S1	594	676+04.51 (T70WB)	681+22.10 (T70WB)	LT												584									
S2	594	976+03.53 (T71SB)	981+10.44 (T71SB)	LT												449									
S3	594	980+78.06 (T71SB)	981+10.45 (T71SB)	RT												33									
G1	594	675+98.32 (T70WB)	681+31.52 (T70WB)	RT													537.50								13
TOTALS CARRIED TO SUB-SUMMARY					413	1001	289		538	1		1	1		93	1066	538	15	21	1	868	132	11	1	13

CALCULATED JAP
CHECKED TAZ

ESTIMATED QUANTITIES

FRA-70-14.54

595
2317

ms consultants, inc.

PLOT.CEL

ms consultants, inc.
msconsultants.com

www.msconsultants.com
Ohio DOT Workspace
70\71 East Interchange 2E

1" 0 0.5"

Batchplot Spec: \\msconsultants.com\files\production\03\60\06634_2E\standards\oladrv\batchplt.SPC
Pen Table: \\msconsultants.com\files\Standards\usatn\ohdot\V8\ms\plotting\pen\V8i_ms_std.tbl
Plot Driver: \\msconsultants.com\files\Standards\usatn\ohdot\v8i\ms\plotting\PDF.pltcfg

Model: Sheet
Printed: 1/10/2019 @ 11:03:49 AM
File: \\msconsultants.com\files\Production\03\60\06634_2E\roadway\sheets\0532200006A.dgn

View: SHEET
By: dhall

3.4" x 22"

PDF: ohdot\V8i
PDF: 60-06634_2E_Columbus

REF. NO.	SHEET NO.	STATION FROM	STATION TO	SIDE	611 15" CONDUIT, TYPE C FT	611 72" CONDUIT, TYPE B, 706.02 FT	611 84" CONDUIT, TYPE B, 706.02 FT		611 MANHOLE RECONSTRUCTED TO GRADE, AS PER PLAN EACH		611 JUNCTION CHAMBER, AS PER PLAN EACH
		INTERSTATE I70 - (I70) TRANS - I-70WB - (T70WB)									
D1	594	777+84.34 (I70)		LT	8	8	8				1
D2	594	679+63.35 (T70WB)		RT					1		
TOTALS CARRIED TO SUB-SUMMARY					8	8	8		1		1

CALCULATED JAP
CHECKED TAZ

ESTIMATED QUANTITIES

FRA-70-14.54

596
2317

PLOT.CEL

ms consultants, inc.
msconsultants.com

www.msconsultants.com
Ohio DOT Workspace
70\71 East Interchange 2E

0 0.5" 1"

Batchplot Spec: \\msconsultants.com\files\production\03\60\06634_2E\standards\plotdrv\batchplt.SPC
Pen Table: \\msconsultants.com\files\Production\03\60\06634_2E\standards\tables\V8i_ms_HP_600_06634_2E_Columbus
Plot Driver: \\msconsultants.com\files\Standards\ustn\ohdot\v8i\ms\plotting\PDF.pltcfg
Model: Sheet View SHEET
Printed: 1/11/2019 @ 3:56:35 PM By: dhall
File: \\msconsultants.com\files\Production\03\60\06634_2E\roadway\sheets\105322CP007.dgn

34" x 22"

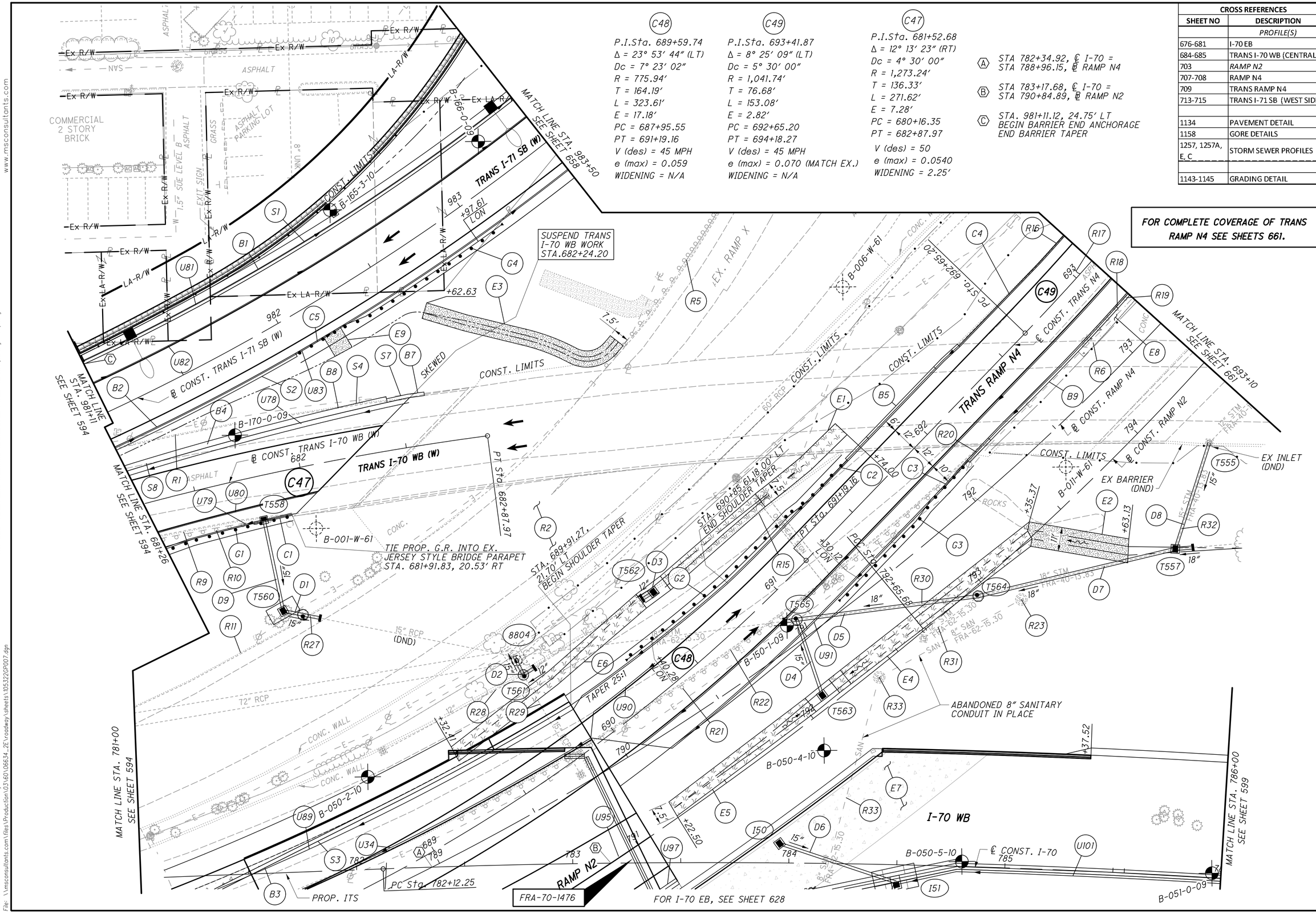

C48
P.I.Sta. 689+59.74
Δ = 23° 53′ 44″ (LT)
Dc = 7° 23′ 02″
R = 775.94′
T = 164.19′
L = 323.61′
E = 17.18′
PC = 687+95.55
PT = 691+19.16
V (des) = 45 MPH
e (max) = 0.059
WIDENING = N/A

C49
P.I.Sta. 693+41.87
Δ = 8° 25′ 09″ (LT)
Dc = 5° 30′ 00″
R = 1,041.74′
T = 76.68′
L = 153.08′
E = 2.82′
PC = 692+65.20
PT = 694+18.27
V (des) = 45 MPH
e (max) = 0.070 (MATCH EX.)
WIDENING = N/A

C47
P.I.Sta. 681+52.68
Δ = 12° 13′ 23″ (RT)
Dc = 4° 30′ 00″
R = 1,273.24′
T = 136.33′
L = 271.62′
E = 7.28′
PC = 680+16.35
PT = 682+87.97
V (des) = 50
e (max) = 0.0540
WIDENING = 2.25′

Ⓐ STA 782+34.92, ℄ I-70 =
STA 788+96.15, ℄ RAMP N4

Ⓑ STA 783+17.68, ℄ I-70 =
STA 790+84.89, ℄ RAMP N2

Ⓒ STA. 981+11.12, 24.75′ LT
BEGIN BARRIER END ANCHORAGE
END BARRIER TAPER

CROSS REFERENCES	
SHEET NO	DESCRIPTION
	PROFILE(S)
676-681	I-70 EB
684-685	TRANS I-70 WB (CENTRAL)
703	*RAMP N2*
707-708	RAMP N4
709	TRANS RAMP N4
713-715	TRANS I-71 SB (WEST SIDE)
1134	PAVEMENT DETAIL
1158	GORE DETAILS
1257, 1257A, E, C	STORM SEWER PROFILES
1143-1145	GRADING DETAIL

FOR COMPLETE COVERAGE OF TRANS RAMP N4 SEE SHEETS 661.

N

0 10 20 40
HORIZONTAL
SCALE IN FEET

CALCULATED | CHECKED

PLAN - I-70 WESTBOUND
STA. 781+00 TO STA. 786+00

FRA-70-14.54

597
2317

PLOT.CEL

ms consultants, inc.
msconsultants.com

Ohio DOT Workspace
70\71 East Interchange 2E
www.msconsultants.com

1" 0.5" 0

Batchplot Spec: \\msconsultants.com\files\production\03\60\06634..2E\standards\olotdr\batchplt.spc
Pen Table: \\msconsultants.com\files\Standards\usth\ohdot\V8\ms\plotting\pen\V8i_ms_std.tbl
Plot Driver: \\msconsultants.com\files\Standards\usth\ohdot\V8\ms\plotting\PDF.prc\g

Model: Sheet @ 3:40:05 PM View: SHEET
Printed: 1/11/2019 By: dhall
File: \\msconsultants.com\files\Production\03\60\06634..2E\roadway\sheets\0532200007.dgn

34" x 22"

CALCULATED JAP
CHECKED TAZ

ESTIMATED QUANTITIES

FRA-70-14.54

REF. NO.	SHEET NO.	STATION FROM	STATION TO	SIDE	202 PAVEMENT REMOVED SQ YD	202 CONCRETE BARRIER REMOVED FT	202 CURB REMOVED FT	202 PIPE REMOVED, 24" AND UNDER FT	202 GUARDRAIL REMOVED FT	202 MANHOLE REMOVED EACH	202 CATCH BASIN REMOVED EACH	202 INLET REMOVED EACH	609 CURB, TYPE 4-C FT	622 CONCRETE BARRIER, END ANCHORAGE, REINFORCED, TYPE C EACH	512 SEALING OF CONCRETE SURFACES SQ YD	202 CONCRETE SLOPE PROTECTION REMOVED SQ YD	622 CONCRETE BARRIER, SINGLE SLOPE, TYPE C, AS PER PLAN "B" FT	622 CONCRETE BARRIER, SINGLE SLOPE, TYPE D FT	622 CONCRETE BARRIER END SECTION, TYPE D EACH	622 CONCRETE BARRIER, END ANCHORAGE, REINFORCED, TYPE D EACH	626 BARRIER REFLECTOR, TYPE 1, BI-DIRECTIONAL EACH	606 GUARDRAIL, TYPE MGS FT	606 MGS BRIDGE TERMINAL ASSEMBLY, TYPE 1 EACH	606 MGS BRIDGE TERMINAL ASSEMBLY, TYPE 2 EACH	606 ANCHOR ASSEMBLY, MGS TYPE E (MASH 2016) EACH	626 BARRIER REFLECTOR, TYPE 1, ONE-WAY EACH	626 BARRIER REFLECTOR, TYPE 2, BI-DIRECTIONAL EACH
		I-70 - (I70) TRANS I-71 SB (T71SB) TRAANS I-70WB (T70WB) RAMP N4 - (N4) RAMP N2 - (N2)																									
R1	597	681+19.52 (T70WB)	682+53.47 (T70WB)	LT			137																				
R2	597	781+00.00 (I70)	784+39.94 (I70)	LT	1961																						
R5	597	982+27.97 (T71SB)	984+14.33 (T71SB)	RT		93			118																		
R6	597	692+76.00 (TN4)	693+10.47 (TN4)	RT												13											
R9	597	681+29.18 (T70WB)	681+91.02 (T70WB)	RT			62																				
R10	597	681+29.39 (T70WB)	681+84.26 (T70WB)	RT					54																		
R11	597	787+96.48 (N4)	789+94.77 (N4)	RT			178																				
R12	597	787+76.69 (N4)	792+83.46 (N4)	LT		472																					
R15	597	787+74.06 (N4)	792+44.12 (N4)	LT		444																					
R16	597	792+44.12 (N4)	793+17.64 (N4)	LT			70																				
R17	597	787+66.00 (N4)	793+18.28 (N4)	LT	1377																						
R18	597	792+88.05 (N4)	793+10.47 (N4)	LT			30																				
R19	597	792+88.67 (N4)	793+10.47 (N4)	LT					29																		
R20	597	792+09.18 (N4)	792+89.39 (N4)	LT		79																					
R21	597	789+16.87 (N4)	792+09.18 (N4)	LT					289																		
R22	597	787+66.00 (N4)	792+19.44 (N4)	LT			379																				
R23	597	692+00.00 (TN4)		RT						1																	
R27	597	788+95.52 (N4)		LT				8				1															
R28	597	789+00.23 (N4)	790+52.74 (N4)	LT				74				2															
R29	597	789+78.66 (N4)	789+77.22 (N4)	LT				53			1	1															
R30	597	789+78.66 (N4)	792+57.00 (N4)	L/R				192		1	1																
R31	597	792+62.95 (N2)	792+94.84 (N2)	RT				32			1																
R32	597	793+74.90 (N2)	794+19.59 (N2)	RT				52																			
R33	597	691+00.00 (TN4)		RT						1																	
B1	597	981+10.44 (T71SB)	983+39.78 (T71SB)	LT														194		2						3	
B2	597	981+10.45 (T71SB)	982+00.00 (T71SB)	RT														80	1		2						
B3	597	688+18.05 (TN4)	689+91.27 (TN4)	LT														167			4						
B4	597	681+22.10 (T70WB)	682+17.66 (T70WB)	LT													98									3	
B5	597	691+65.71 (TN4)	692+39.64 (TN4)	LT											67			45	1	1	3						
B7	597	682+44.73 (T70WB)	682+61.90((T70WB)	LT														18								1	
B8	597	682+17.66 (T70WB)	682+44.73 (T70WB)	LT										2													
B9	597	692+04.39 (TN4)	693+16.19 (TN4)	RT											102			85	2		3						
S1	597	981+10.44 (T71SB)	983+39.78 (T71SB)	LT											213												
S2	597	981+10.45 (T71SB)	982+00.00 (T71SB)	RT											86												
S3	597	688+18.05 (TN4)	689+91.27 (TN4)	LT											151												
S4	597	682+17.66 (T70WB)	682+44.73 (T70WB)	LT											32												
S7	597	682+44.73 (T70WB)	682+61.90 (T70WB)	LT											16												
S8	597	681+22.10 (T70WB)	682+17.66 (T70WB)	LT											111												
G1	597	681+31.52 (T70WB)	681+94.05 (T70WB)	RT																			50.0		1			2
G2	597	690+25.05 (TN4)	691+65.71 (TN4)	LT																			50.0	1		1		3
G3	597	691+16.19 (TN4)	692+04.40 (TN4)	RT																			12.5	1		1		3
G4	597	982+00.00 (T71SB)	983+09.89 (T71SB)	RT																			37.5	1		1		3
C1	597	681+73.39 (T70WB)	681+91.84 (T70WB)	RT									18														
C2	597	691+47.71 (TN4)	691+65.71 (TN4)	LT									18														
C3	597	691+86.40 (TN4)	692+04.39 (TN4)	RT									18														
C4	597	692+39.64 (TN4)	693+10.76 (TN4)	LT									71														
C5	597	982+00.00 (T71SB)	982+17.73 (T71SB)	RT									18														
TOTALS CARRIED TO SUB-SUMMARY					3338	1088	856	411	490	3	3	4	143	2	778	13	98	589	4	3	12	150	3	1	3	7	11

598
2317

PLOT.CEL
ms consultants, inc.
msconsultants.com
www.msconsultants.com
Ohio DOT Workspace
70\71 East Interchange 2E
1" 0.5" 0
DGN: ohdot\V8i
PCF: 60-06634_2E_Columbus
Batchplot Spec: \\msconsultants.com\files\production\Q3\60\06634_2E\standards\plotdrv\batchplt.spc
Pen Table: N:\Q3\60\06634_2E\standards\tables\V8i_ms_std_06634_2D_Plan View.tbl
Plot Driver: \\msconsultants.com\files\Standards\ustn\ohdot\v8i\ms\plotting\PDF.pltcfg
Model: Sheet
Printed: 6/19/2018 @ 8:32:33 AM
File: N:\Q3\60\06634_2E\roadway\sheets\1053226Q007A.dgn
View: FENCE_VIEW1
By: jdougas
34" x 22"

REF. NO.	SHEET NO.	STATION FROM	STATION TO	SIDE	611 CATCH BASIN, NO. 8 EACH	611 15" CONDUIT, TYPE C FT	611 CATCH BASIN, NO. 3A EACH	611 MANHOLE, NO. 3 EACH	611 18" CONDUIT, TYPE B FT	611 15" CONDUIT, TYPE B FT	670 DITCH EROSION PROTECTION MAT, TYPE B SQ YD		601 TIED CONCRETE BLOCK MAT, TYPE 1 SQ YD	601 TIED CONCRETE BLOCK MAT, TYPE 2 SQ YD	601 CONCRETE SLOPE PROTECTION SQ YD	611 15" CONDUIT, TYPE F FT	611 12" CONDUIT, TYPE C FT	611 MANHOLE RECONSTRUCTED TO GRADE EACH
		I-70 - (I70) RAMP N4 - (N4) TRANS I-70WB - (T70WB) TRANSI-71SB - (T71SB) TRANS N4 - (TN4)																
D1	597	681+78.05 (T70WB)	681+87.07 (T70WB)	RT	1	17		1										
D2	597	689+83.02 (TN4)	689+95.55 (TN4)	LT		10		1									6	1
D3	597	690+50.13 (TN4)	690+56.37 (TN4)	LT	1												6	
D4	597	690+81.78 (TN4)	690+96.90 (TN4)	RT	1					37								
D5	597	790+95.59 (N4)	791+78.14 (N4)	LT/RT				2	90									
D6	597	783+95.64 (I70)	784+50.04 (I70)	LT/RT	1					57								
D7	597	791+72.91 (N4)	792+51.98 (N4)	RT	1				100									
D8	597	792+95.23 (N4)	792+51.98 (N4)	RT												83		
D9	597	681+78.47 (T70WB)	681+78.05 (T70WB)	RT			1									92		
E1	597	690+64.08 (TN4)	691+74.05 (TN1)	LT							92							
E2	597	692+03.62 (TN4)	692+29.92 (TN4)	RT									57					
E3	597	982+59.10 (I71SB)	983+09.21 (T71SB)	RT									68					
E4	597	690+88.65 (TN4)	692+03.62 (TN4)	RT							110							
E5	597	689+32.41 (TN4)	690+49.32 (TN4)	RT							69							
E6	597	690+00.42 (TN4)	690+75.47 (TN4)	RT							94							
E7	597	783+48.46 (I70)	784+90.18 (I70)	LT											380			
E8	597/654	692+76.00 (TN4)	693+16.19 (TN4)	RT											16			
E9	597	982+14.77 (T71SB)	982+23.64 (T71SB)	RT										10				
TOTALS CARRIED TO SUB-SUMMARY					5	27	1	4	190	94	365		125	10	396	175	12	1

CALCULATED JAP
CHECKED TAZ

ESTIMATED QUANTITIES

FRA-70-14.54

598A
2317

CROSS REFERENCES	
SHEET NO	DESCRIPTION
	PROFILE(S)
676-681	I-70 EB
691-693	TRANS I-71 SB (EAST SIDE)
710-712	*RAMP Q3*
726-729	PARSONS AVE
730	TRANS PARSONS AVE
1116, 1118	DRIVE DETAILS
1121	PAVEMENT JOINT DETAIL
1257W, 1260G	STORM SEWER PROFILES
1144-1145	GRADING DETAIL

(A) STA. 185+00.07, 38.00′ LT ℄ PARSONS =
STA. 85+00.00, 27.32′ LT ℄ TRANS. PARSONS

(B) STA. 184+98.56, 37.16′ RT ℄ PARSONS =
STA. 85+00.00, 47.86′ RT ℄ TRANS. PARSONS

(C) STA. 184+99.34 ℄ PARSONS =
STA. 85+00.00 10.69′ RT ℄ TRANS PARSONS

C31
P.I.Sta. 85+23.85
Δ = 12° 07′ 47″ (RT)
Dc = 11° 00′ 00″
R = 520.87′
T = 55.34′
L = 110.27′
E = 2.93′
PC = 84+68.51
PRC = 85+78.78
V (des) = 35 MPH
e (max) = NC
WIDENING = N/A

C32
P.I.Sta. 86+34.74
Δ = 12° 15′ 50″ (LT)
Dc = 11° 00′ 00″
R = 520.87′
T = 55.96′
L = 111.49′
E = 3.00′
PRC = 85+78.78
PT = 86+90.27
V (des) = 35 MPH
e (max) = NC
WIDENING = N/A

C3
P.I. STA. 787+78.67
Δ = 16° 30′ 00″ (RT)
Dc = 1° 28′ 00″
R = 3,906.53′
T = 566.42′
L = 1,125.00′
E = 40.85′
PC = 782+12.25
PT = 793+37.25
V (des) = 60 MPH
e (max) = 0.037
WIDENING = N/A

C59
P.I. STA. 889+27.07
Δ = 74° 49′ 02″ (LT)
Dc = 5° 29′ 55″
R = 1,042.00′
T = 796.92′
L = 1,360.65′
E = 269.81′
SC = 881+30.15
CS = 894+90.81
V (des) = 55 MPH
e (max) = 0.060
WIDENING = 4.5′

C76
P.I.= Sta. 185+94.36
Δ = 18° 42′ 34″ (RT)
Dc = 7° 30′ 00″
R = 763.94′
T = 125.85′
L = 249.46′
E = 10.30′
PC = 184+68.51
PT = 187+17.96
V (des) = 40 MPH
e (max) = NC
WIDENING = N/A

HORIZONTAL SCALE IN FEET: 0 10 20 40

CALCULATED | CHECKED

PLAN - I-70 WESTBOUND
STA. 786+00 TO STA. 791+00

FRA-70-14.54

ms consultants, inc. msconsultants.com www.msconsultants.com PLOT.CEL
Model: Sheet View: SHEET Printed: 10/10/2018 @ 2:16:45 PM By: hbrendlinger
File: \\msconsultants.com\files\Production\03\60\06634_2E\roadway\sheets\105322GP008.dgn
34" x 22"
Batchplot Spec: \\msconsultants.com\files\production\03\60\06634_2E\standards\plotdrv\batchplt.spc
Pen Table: \\msconsultants.com\files\Production\03\60\06634_2E\deliverables\2018-09-28 FINAL TRACINGS SUBMITTAL\1.0 Construction Plans\1.2 PDF Plan Sheets\V8i_ms_std.tbl
Plot Driver: \\msconsultants.com\files\Standards\ustn\ohdot\v8i\ms\plotting\PDF.pltcfg
UCF: ohdot\V8i Ohio DOT Workspace
PCF: 60-06634_2E_Columbus 70\71 East Interchange 2E
ms consultants, inc.

PLOT.CEL

ms consultants, inc.
msconsultants.com

www.msconsultants.com
70\71 East Interchange 2E
Ohio DOT Workspace

1" 0.5" 0

Batchplot Spec= \\msconsultants.com\files\production\03\60\06634_2E\standards\plotdrv\batchplt.spc
Pen Table= N:\03\60\06634_2E\standards\tables\V8i_ms_std_06634_2D_Plan View_NoClouds.tbl
Plot Driver= \\msconsultants.com\files\standards\ustn\ohdot\v8i\ms\plotting\PDF.pltcfg
PDF: ohdotV8i
H.F.: 60-06634_2E_Columbus

34" x 22"

Model: Sheet
Printed: 10/24/2018 @ 1:37:49 PM
File: N:\03\60\06634_2E\roadway\sheets\1053220D008.dgn
View: FENCE_VIEW1
By: Ilbrendinger

REF. NO.	SHEET NO.	STATION FROM	STATION TO	SIDE	202 PAVEMENT REMOVED SQ YD	202 CONCRETE BARRIER REMOVED FT	202 CURB REMOVED FT	202 INLET REMOVED EACH	202 PIPE REMOVED, 24" AND UNDER FT	202 FENCE REMOVED FT	202 WALK REMOVED SQ FT	252 FULL DEPTH PAVEMENT SAWING FT	607 FENCE, TYPE CL, AS PER PLAN FT	607 GATE, TYPE CL, AS PER PLAN EACH	607 FENCE, TYPE CL FT	607 GATE, TYPE CL EACH	202 CONCRETE SLOPE PROTECTION REMOVED SQ YD	608 8" CONCRETE WALK SQ FT	608 4" CONCRETE WALK SQ FT	609 CURB, MISC.: COLUMBUS 18" CONCRETE CURB, AS PER PLAN FT	622 CONCRETE BARRIER, SINGLE SLOPE, TYPE D FT	622 BARRIER TRANSITION EACH	512 SEALING OF CONCRETE SURFACES SQ YD	SPECIAL MISC.: GRASS PAVEMENT SYSTEM SQ YD	626 BARRIER REFLECTOR, TYPE 1, BI-DIRECTIONAL EACH
		I-70 - (I70) TRANS. I-71 SB, (EAST) - (T71SB) TRANS PARSONS - (TPAR) RAMP Q3 - (Q3) PARSONS ST. - (PAR)																							
R1	599	214+56.80 (T71SB)	214+97.81 (T71SB)	LT		40																			
R2	599	184+49.89 (PAR)	86+90.27 (TPAR)	LT			241																		
R3	599	184+49.89 (PAR)	86+65.04 (TPAR)	LT						215															
R4	599	184+49.89 (PAR)	86+71.59 (TPAR)	RT						219															
R5	599	184+49.89 (PAR)	186+92.90 (PAR)	RT			238																		
R7	599	184+49.89 (PAR)	86+90.27 (TPAR)	L/R	1270																				
R8	599	184+49.89 (PAR)	86+90.27 (TPAR)	LT							1136														
R9	599	214+56.80 (T71SB)	215+23.12 (T71SB)	RT			68																		
R10	599	214+56.80 (T71SB)	214+98.56 (T71SB)	LT								42													
R11	599	86+90.27 (TPAR)		LT/RT								48													
R12	599	85+99.46 (TPAR)	86+51.81 (TPAR)	LT				2	69																
R13	599	86+56.03 (TPAR)		RT				1	10																
R14	599	214+56.80 (T71SB)	214+97.81 (T71SB)	LT								41					4								
R15	599	214+56.80 (T71SB)	215+22.48 (T71SB)	RT								69													
F1	599	185+11.41 (PAR)	186+55.57 (PAR)	LT									148	2											
F2	599	185+25.26(PAR)	185+25.73(PAR)	RT											6	1									
F3	599	85+28.28 (TPAR)	86+71.59 (TPAR)	RT											147										
C1	599	184+49.89 (PAR)	86+90.27 (TPAR)	LT																241					
C2	599	184+49.89 (PAR)	86+90.27 (TPAR)	RT																239					
SW1	599	85+85.01 (TPAR)	86+09.27 (TPAR)	LT															500						
SW2	599	184+49.89 (PAR)	85+70.09 (TPAR)	LT															970						
SW3	599	184+49.09 (PAR)	184+98.55 (PAR)	RT															926						
SW4	599	85+70.09 (TPAR)	85+85.01 (TPAR)	LT														252							
P1	599	185+63.97 (PAR)	185+91.79 (PAR)	LT																				113	
B1	599	214+56.80 (T71SB1)	214+97.81 (T71SB1)	LT																	20	1	36		1
TOTALS CARRIED TO SUB-SUMMARY					1270	40	547	3	79	434	1136	200	148	2	153	1	4	252	2396	480	20	1	36	113	1

CALCULATED JAP
CHECKED TAZ

ESTIMATED QUANTITIES

FRA-70-14.54

600
2317

ms consultants, inc.

PLOT.CEL

ms consultants, inc.
msconsultants.com

www.msconsultants.com
Ohio DOT Workspace
70\71 East Interchange 2E

1" 0.5" 0

PCF: ohdot\V8i
PCF: 60-06634_2E_Columbus

34" x 22"

Batchplot Spec: \\msconsultants.com\files\production\03\60\06634_2E\standards\plotdr\batchplt.spc
Pen Table: N:\03\60\06634_2E\standards\tables\V8i_ms_std_06634_2D_Plan View.tbl
Plot Driver: \\msconsultants.com\files\Standards\usetn\ohdot\v8i\ms\plotting\PDF.pltcfg

Model: Sheet
Printed: 6/19/2018 @ 8:33:18 AM
File: N:\03\60\06634_2E\roadway\sheets\05322600BA.dgn
View: FENCE_VIEW1
By: jdougas

REF. NO.	SHEET NO.	STATION FROM	STATION TO	SIDE	SPECIAL BOLLARD EACH	601 CONCRETE SLOPE PROTECTION SQ YD			611 15" CONDUIT, TYPE C FT	611 12" CONDUIT, TYPE B, AS PER PLAN FT	611 15" CONDUIT, TYPE B FT	611 18" CONDUIT, TYPE B FT	611 CONDUIT, BORED OR JACKED, 748.06, 16" FT	602 CONCRETE MASONRY CU YD	611 MANHOLE, NO. 3 EACH	611 INLET, MISC.: CITY OF COLUMBUS DOUBLE CURB AND GUTTER INLET EACH	611 INLET, MISC.: CITY OF COLUMBUS STANDARD CURB AND GUTTER INLET EACH	611 INLET, MISC.: CITY OF COLUMBUS 60" CURB INLET EACH	670 DITCH EROSION PROTECTION MAT, TYPE B SQ YD						
		TRANS. PARSONS - (TPAR) TRANS 71SB (EAST) - T71SB) RAMP Q3 - (Q3) PARSONS ST. - (PAR)																						
B01	599	185+61.09 (PAR)	185+94.68 (PAR)	LT	16																			
D1	599	86+60.20 (TPAR)	86+50.08 (TPAR)	LT						6	6	6						1						
D2	599	86+60.78 (TPAR)	86+55.66 (TPAR)	RT							12							1						
D3	599	85+01.35 (TPAR)	184+53.74 (PAR)	LT							49					1								
D4	599	85+08.70 (TPAR)	184+53.74 (PAR)	RT						51							1							
D5	599	84+68.51 (TPAR)		LT/RT						75						1								
D6	599	888+89.72 (Q3)	886+81.01 (Q3)	LT									199	0.28										
D7	599	886+81.01 (Q3)	886+29.72 (Q3)	LT					47						1									
E1	599	214+34.19 (T71SB)	215+27.11 (T71SB)	RT															81					
E2	599	889+14.71 (Q3)	890+67.94 (Q3)	LT		207																		
E3	599	214+56.80 (T71SB)	214+97.81 (T71SB)	LT		4																		
TOTALS CARRIED TO SUB-SUMMARY					16	211			47	132	67	6	199	0.28	1	2	1	2	81					

CALCULATED JAP
CHECKED TAZ

ESTIMATED QUANTITIES

FRA-70-14.54

601
2317

PLOT.CEL

ms consultants, inc.
msconsultants.com

www.msconsultants.com
Ohio DOT Workspace
70\71 East Interchange 2E

CROSS REFERENCES	
SHEET NO	DESCRIPTION
	PROFILE(S)
676-681	I-70 EB
686-687	TRANS RAMP P2 WEST
688-690	*TRANS I-70 WB (EAST SIDE)*
691-693	TRANS I-71 SB (EAST SIDE)
694	TRANS I-71 NB
1168	GORE DETAILS
1257B-C, 1258D	STORM SEWER PROFILES
1144, 1146	GRADING DETAIL

C39

P.I.Sta. 216+89.94
Δ = 25° 13′ 47″ (LT)
Dc = 5° 30′ 00″
R = 1,041.74′
T = 233.14′
L = 458.72′
E = 25.77′
PC = 214+56.80
CS = 219+15.52
V (des) = 55 MPH
e (max) = 0.060′
WIDENING = 2.77′

C40

P.I. STA. 219+66.88
Ls = 154.00′
f s = 4° 14′ 06″
LT = 102.70′
ST = 51.36′
x = 153.92′
y = 3.79′
k = 76.99′
p = 0.95′
CS = 219+15.52
ST = 220+69.52

C33

P.I.Sta. 218+77.22
Δ = 8° 18′ 26″ (RT)
Dc = 3° 30′ 00″
R = 1,637.02′
T = 118.88′
L = 237.35′
E = 4.31′
PC = 217+58.34
PT = 219+95.68
V (des) = 60 MPH
e (max) = 0.0580 (MATCH EX.)
WIDENING = N/A

C53

P.I.Sta. 792+62.84
Δ = 8° 32′ 37″ (RT)
Dc = 5° 00′ 00″
R = 1,145.92′
T = 85.60′
L = 170.87′
E = 3.19′
PC = 791+77.25
PT = 793+48.12
V (des) = 45 MPH
e (max) = 0.0510
WIDENING = N/A

NOTE A:
CAUTION: DO NOT DISTURB BURIED WALL I-11B PLACED IN FRA-70-15.25 (PHASE 2C) STA. 791+77.42, 20.0′ RT TO STA. 795+11.77, 20.0′ LT, ℄ TRANS RAMP P2 (C).

BEGIN RDWY WORK TRANS RAMP P2 (C) STA.791+77.25
MATCHLINE STA. 891+49.00 SEE SHEET 664
POT Sta. 792+62.96
℄ CONST. TRANS I-71 NB
℄ CONST. TRANS RAMP P2
B-157-4-10
EX. I-3D INLET (DND)
MATCH LINE SEE SHEET 664
EX. BARRIER (DND)
EX. GUARDRAIL (DND)
TRANS RAMP P2 (C)
CAUTION SEE NOTE A
BEGIN RDWY WORK TRANS I-71 NB STA.795+71.12
DENSE TREES
5' CHAIN LINK FENCE
EX LA R/W
℄ Ex R/W
8" VCP CONST. LIMITS
12" ABANDONED FRA.062-15.30-01T
EX R/W
EX SW
SAN
MATCH LINE STA. 795+96 SEE SHEET 605
RESUME RDWY WORK TRANS I-70WB (E) STA. 217+58.34
TIE INTO EX. GUARDRAIL STA. 217+58.34
B-157-3-10
B-013-S-61
CONST. LIMITS
B-158-0-09
B-159-1-10
SAW CUT
TRANSITION CURB HEIGHT FROM EX. 4" TO 0" IN 10.0'
PC Sta. 794+19.57
CONSTRUCTED IN PHASE 2C)
CONSTRUCTED IN PHASE 2C)
15" CONST. LIMITS
B-159-3-10
36" RCP
CAUTION EX. 15" SAN. LINE
+99.67 6.0' LT
25:1 TAPER
+49.67 16.00' RT
+49.67 8.00' LT
℄ CONST. TRANS RAMP P2 (C)
15" (DND)
EX CB-8 (DND)
B-159-4-10
MATCH LINE STA. 796+04 SEE SHEET 605
SEE SHEET 599
CONST. LIMITS
BEGIN CURVE WIDENING STA. 215+14.43, 12.00′ LT
+85.37
+00.00 13.28′ LT
+49.53
EX. GUARDAIL & CURB (DND)
B-159-2-10
TIE INTO EX. GUARDRAIL STA. 219+50.00
END CURVE WIDENING STA. 216+69.83, 14.77′ LT
+62.89 22.00′ RT
+00.00 22.00′ RT
℄ CONST. TRANS I-70 WB (E)
TRANS I-70 WB (E)
PT Sta. 219+95.68
36" RCP TO REMAIN
SAN TO REMAIN
Sta. 219+15.52
MATCH LINE STA. 221+81 SEE SHEET 605
WALL I-13T
FRA-70-1498
B-051-7-10
I-70 WB
℄ CONST. I-70
B-052-1-10
PT Sta. 793+37.25
BEGIN CURVE WIDTH TRANS. STA. 219+15.52, 14.77′ LT
TRANS I-71 SB (E)
MATCH LINE STA. 796+00 SEE SHEET 605
S 82° 30′ 00″ E
S2 FOR I-70 EB, SEE SHEET 635

HORIZONTAL SCALE IN FEET
0 10 20 40
CALCULATED
CHECKED

PLAN - I-70 WESTBOUND
STA. 791+00 TO STA. 796+00

FRA-70-14.54

602
2317

Batchplot Spec: \\msconsultants.com\files\Production\03\60\06634_2E\roadway\sheets\1053226P009.dgn
Pen Table: \\msconsultants.com\files\Production\03\60\06634_2E\standards\tables\V8i_ms_110_-_60-06634_2E_Columbus
Plot Driver: \\msconsultants.com\files\Standards\ustn\ohdot\v8i\ms\plotting\PDF.pltcfg
Model: Sheet View: SHEET
Printed: 1/17/2019 @ 2:47:09 PM By: dhall
File: \\msconsultants.com\files\Production\03\60\06634_2E\roadway\sheets\1053226P009.dgn
34" x 22"

ms consultants, inc.

PLOT.CEL

ms consultants, inc.
msconsultants.com

www.msconsultants.com
70\71 East Interchange 2E
Ohio DOT Workspace

1" 0.5" 0

Batchplot Spec= \\msconsultants.com\files\production\Q3\60\06634_2E\standards\plotdrv\batchplt.spc
Pen Table= N:\Q3\60\06634_2E\standards\tables\V8i_ms_std_06634_2D_Plan View_NoClouds.tbl
Plot Driver= \\msconsultants.com\files\Standards\ustn\ohdot\v8i\ms\plotting\PDF.pltcfg
PDF: ohdot\V8i
PLT: 60-06634_2E_Columbus

34" x 22"

Model: Sheet
Printed: 10/24/2018 @ 1:37:59 PM
File: N:\Q3\60\06634_2E\roadway\sheets\1053220009.dgn
View: FENCE_VIEW1
By: hbrendinger

REF. NO.	SHEET NO.	STATION FROM	STATION TO	SIDE	202 CONCRETE BARRIER REMOVED FT	202 CURB REMOVED FT	202 INLET REMOVED EACH	202 PIPE REMOVED, 24" AND UNDER FT	202 CATCH BASIN REMOVED EACH	202 GUARDRAIL REMOVED FT	202 CONCRETE SLOPE PROTECTION REMOVED SQ YD	252 FULL DEPTH PAVEMENT SAWING FT	609 CURB, TYPE 4-C FT			512 SEALING OF CONCRETE SURFACES SQ YD	606 GUARDRAIL, TYPE MGS FT	606 ANCHOR ASSEMBLY, MGS TYPE E (MASH 2016) EACH	622 CONCRETE BARRIER, SINGLE SLOPE, TYPE D FT	622 BARRIER TRANSITION EACH	622 CONCRETE BARRIER, END ANCHORAGE, REINFORCED, TYPE D EACH	626 BARRIER REFLECTION, TYPE 1, BI-DIRECTIONAL EACH	626 BARRIER REFLECTOR, TYPE 2, ONE-WAY EACH	626 BARRIER REFLECTOR, TYPE 2, BI-DIRECTIONAL EACH	626 BARRIER REFLECTOR, TYPE 1, ONE-WAY EACH
		TRANS I-71 NB (T71NB) TRANS P2-Central (TP2C) TRANS I-71 SB (East) (T71SB) TRANS I-70 WB (East) (T70WB)																							
R1	602	214+97.81 (T71SB)	215+22.08 (T71SB)	LT	24																				
R2	602	215+22.08 (T71SB)	220+44.39 (T71SB)	LT/RT		527																			
R3	602	215+23.12 (T71SB)	218+84.83 (T71SB)	RT		375																			
R4	602	214+97.81 (T71SB)	215+85.37 (T71SB)	LT							10	88													
R7	602	217+04.56 (T71SB)	217+09.66 (T71SB)	LT				6	1																
R8	602	217+58.34 (T70WB)	220+02.33 (T70WB)	LT						249															
R9	602	217+58.34 (T70WB)	220+02.23 (T70WB)	LT		249																			
R10	602	214+97.81 (T71SB)	216+00.00 (T71SB)	LT/RT								214													
R11	602	795+71.12 (T71NB)	795+95.24 (T71NB)	LT		24						24													
R13	602	793+00.00 (TP2C)	796+02.42(TP2C)	LT	302																				
R14	602	219+39.93 (T70WB)	221+81.08 (T70WB)	RT		241																			
R15	602	219+50.00 (T70WB)	221+81.08 (T70WB)	RT						231															
R16	602	215+53.24 (T71SB)	217+04.36 (T71SB)	LT			1	148																	
R20	602	215+25.00 (T71SB)	215+53.24 (T71SB)	LT/RT			1	50																	
G1	602	217+58.34 (T70WB)	219+41.75 (T70WB)	LT													137.50	1						5	
G2	602	219+50.00 (T70WB)	221+87.67 (T70WB)	RT													237.50						5		
C1	602	217+58.34 (T70WB)	217+68.13 (T70WB)	LT									10												
C2	602	219+39.93 (T70WB)	219+50.00 (T70WB)	RT									10												
C3	602	795+71.12 (T71NB)	795+95.24 (T71NB)	LT									24												
B1	602	793+00.00 (TP2C)	794+48.44 (TP2C)	LT															119		2	3			
B2	602	794+68.52 (TP2C)	796+02.42 (TP2C)	LT															119		1	3			
B3	602	214+97.81 (T71SB)	217+00.00 (T71SB)	LT															164	1	1	5			
B4	602	791+00.00 (I70)	792+50.00 (I70)	LT															152						5
S1	602	793+00.00 (TP2C)	796+02.42 (TP2C)	LT												272									
S2	602	214+97.81 (T71SB)	217+00.00 (T71SB)	LT												182									
S3	602	791+00.00 (I70)	792+50.00 (I70)	LT												140									
R4	602	217+68.13 (T70WB)	219+50.00 (T70WB)	LT								234													
R10	602	795+71.12 (T71NB)	795+95.90 (T71NB)	LT								35													
R17	602	219+65.93 (T70WB)	219+76.44 (T70WB)	LT			1	11																	
R18	602	220+04.99 (T70WB)	219+76.44 (T70WB)	LT/RT			1	56																	
R19	602	219+57.54 (T70WB)	219+76.44 (T70WB)	LT				24	1																
R21	602	793+00.00 (TP2C)		LT/RT								28													
TOTALS CARRIED TO SUB-SUMMARY					326	1416	4	295	2	480	10	623	44			594	375	1	554	1	4	11	5	5	5

CALCULATED JAP
CHECKED TAZ

ESTIMATED QUANTITIES

FRA-70-14.54

603
2317

ms consultants, inc.

PLOT.CEL

ms consultants, inc.
msconsultants.com

Ohio DOT Workspace
70\71 East Interchange 2E
www.msconsultants.com

1" 0.5" 0

PCF: 60-06634_2E_Columbus
ODF: ohdot\V8i

Batchplot Spec: \\msconsultants.com\files\production\Q3\60\06634_2E\standards\plotdrv\batchplt.spc
Pen Table: N:\Q3\60\06634_2E\standards\tables\V8i_ms_std_06634_2D_Plan View.tbl
Plot Driver: \\msconsultants.com\files\Standards\usetn\ohdot\v8i\ms\plotting\PDF.pltcfg

Model: Sheet
Printed: 6/19/2018 @ 8:34:04 AM
File: N:\Q3\60\06634_2E\roadway\sheets\105322000009A.dgn

View: FENCE_VIEW1
By: jdouglas

34" x 22"

REF. NO.	SHEET NO.	STATION FROM	STATION TO	SIDE	601 CONCRETE SLOPE PROTECTION (SQ YD)		670 DITCH EROSION PROTECTION MAT, TYPE B (SQ YD)				611 15" CONDUIT, TYPE C (FT)		611 15" CONDUIT, TYPE B (FT)		611 CATCH BASIN, NO. 8 (EACH)	611 INLET, NO. 3 FOR SINGLE SLOPE BARRIER, TYPE D (EACH)	611 MANHOLE RECONSTRUCTED TO GRADE (EACH)	611 INLET, NO. 3 FOR SINGLE SLOPE BARRIER, TYPE C1 (EACH)	611 MANHOLE, NO. 3 (EACH)		611 CATCH BASIN, NO. 3A (EACH)	611 MANHOLE RECONSTRUCTED TO GRADE, AS PER PLAN (EACH)			
		TRANS. 70WB(EAST) - (T70WB) TRANS. 71SB(EAST) - (T71SB) I-70 - (I70) RAMP Q3 - (Q1) TRANS. RAMP P2 - (TP2)																							
D1	602, 635	792+40.00 (I70)	792+75.00 (I70)	LT/RT									44					1							
D2	602	217+00.00 (T71SB)	217+04.56 (T71SB)	LT							16				1				1						
D3	602	219+76.44 (T70WB)		LT													1								
D4	602	218+75.10 (T71SB)		RT																		1			
D5	602	794+58.48 (TP2)	794+68.52 (TP2)	LT							10					1									
D6	602	219+44.96 (T70WB)	219+76.44 (T70WB)	LT/RT									62								1				
D7	602	794+29.76 (TP2)		RT													1								
E1	602	215+27.11 (T71SB)	217+00.00 (T71SB)	RT			147																		
E2	602	215+85.37 (T71SB)	216+92.45 (T71SB)	LT			90																		
E3	602	217+06.53 (T71SB)	220+41.15 (T71SB)	LT			272																		
E4	602	729+50.00 (I70)	793+00.00 (I70)	LT	150																				
E5	602	890+67.94 (Q3)	891+01.39 (Q3)	LT	72																				
E6	602	214+97.81 (T71SB)	215+85.37 (T71SB)	LT	10																				
TOTALS CARRIED TO SUB-SUMMARY					232		509				26		106		1	1	2	1	1		1	1			

CALCULATED JAP
CHECKED TAZ

ESTIMATED QUANTITIES

FRA-70-14.54

604
2317

PLOT.CEL

ms consultants, inc.
msconsultants.com

CROSS REFERENCES	
SHEET NO	DESCRIPTION
	PROFILE(S)
676-681	I-70 EB
686-687	TRANS RAMP P2 WEST
688-690	TRANS I-70 WB (EAST SIDE)
691-693	TRANS I-71 SB (EAST SIDE)
694	TRANS I-71 NB
1161-1162, 1168	GORE DETAILS
1258D-E	STORM SEWER PROFILES
1146	GRADING DETAIL

NOTE:
ATTENUATOR DESIGN INFORMATION
@ STA. I-70-799+17.67 LT.
DESIGN SPEED = 60 MPH
HAZARD WIDTH = 24"

(A) END SAWCUT
STA. 797+52.15, 30.74' RT
℄ TRANS I-71 NB (E)

(B) STA. 797+52.15, 16.00' RT
℄ TRANS I-71 NB (E)

NOTE 1 : BARRIER & GUARDRAIL REFLECTORS SHALL BE INSTALLED AT 25' O.C.

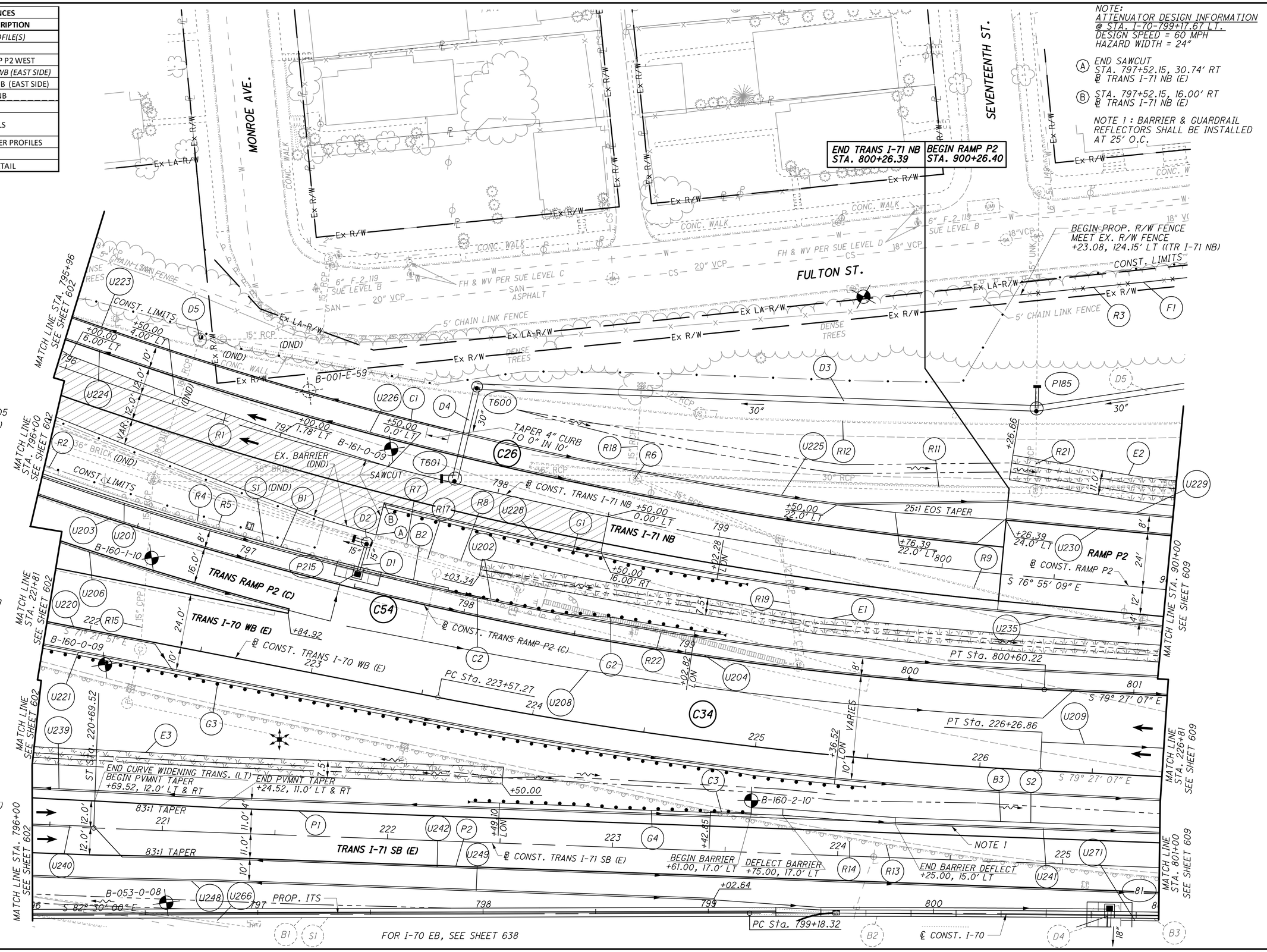

C26
P.I.Sta. 798+00.05
Δ = 14° 54' 21" (LT)
Dc = 3° 16' 27"
R = 1,750.00'
T = 228.93'
L = 455.27'
E = 14.91'
PT = 800+26.39
PC = 795+71.12
V (des) = 55 MPH
e (max) = 0.0522
WIDENING = N/A

C34
P.I.Sta. 224+92.29
Δ = 8° 05' 16" (LT)
Dc = 3° 00' 00"
R = 1,909.86'
T = 135.02'
L = 269.59'
E = 4.77'
PC = 223+57.27
PT = 226+26.86
V (des) = 55 MPH
e (max) = 0.050
WIDENING = N/A

C54
P.I.Sta. 797+44.12
Δ = 22° 35' 40" (LT)
Dc = 3° 31' 36"
R = 1,624.58'
T = 324.54'
L = 640.65'
E = 32.10'
PC = 794+19.57
PT = 800+60.22
V (des) = 50 MPH
e (max) = 0.0482
WIDENING = N/A

HORIZONTAL SCALE IN FEET 0 10 20 40

CALCULATED
CHECKED

PLAN - I-70 WESTBOUND
STA. 796+00 TO STA. 801+00

FRA-70-14.54

605
2317

ms consultants, inc.

PLOT.CEL
ms consultants, inc.
msconsultants.com
www.msconsultants.com
Ohio DOT Workspace
70\71 East Interchange 2E
1"
0.5"
0
Batchplot Spec= \\msconsultants.com\files\production\03\60\06634_2E\standards\plotdrv\batchplt.spc
Pen Table= N:\03\60\06634_2E\standards\tables\V8i_ms_std_06634_2D_Plan View_NoClouds.tbl
Plot Driver= \\msconsultants.com\files\standards\ustn\ohdot\v8i\ms\plotting\PDF.pltcfg
PDF: ohdot\V8i
PID#: 60-06634_2E_Columbus
34" x 22"
Model: Sheet
Printed: 10/24/2018 @ 1:38:09 PM
File: N:\03\60\06634_2E\roadway\sheets\05322600l0.dgn
View: FENCE_VIEW1
By: hbrendinger

REF. NO.	SHEET NO.	STATION FROM	STATION TO	SIDE	202 FENCE REMOVED (FT)	202 CONCRETE BARRIER REMOVED (FT)	202 CURB REMOVED (FT)	202 PIPE REMOVED, 24" AND UNDER (FT)	202 PIPE REMOVED, OVER 24" (FT)	202 GUARDRAIL REMOVED (FT)	202 MANHOLE REMOVED (EACH)	202 CATCH BASIN REMOVED (EACH)	202 INLET REMOVED (EACH)	202 REMOVEAL MISC.: TRENCH DRAIN REMOVED (FT)	252 FULL DEPTH PAVEMENT SAWING (FT)	606 GUARDRAIL, TYPE MGS (FT)	606 ANCHOR ASSEMBLY, MGS TYPE E (MASH 2016) (EACH)	606 ANCHOR ASSEMBLY, MGS TYPE T (EACH)	607 FENCE, TYPE CL (FT)	609 CURB, TYPE 4-C (FT)	618 EDGE LINE, RUMBLE STRIPE (ASPHALT CONCRETE) (MILE)	626 BARRIER REFLECTOR, TYPE 2, BI-DIRECTIONAL (EACH)	606 MGS BRIDGE TERMINAL ASSEMBLY, TYPE 1 (EACH)
		I-70 - (I70) TRANS RAMP P2 (Central) - (TP2C) RAMP P2 - (P2) TRANS I-71 NB - (T71NB) TRANS I-71 SB (E) - (T71EB) TRANS I-70WB - (T70WB)																					
R1	602,605	796+02.52 (T71NB)	797+52.15 (T71NB)	RT											384								
R2	605	796+02.42 (TP2C)	796+09.09 (TP2C)	LT		7																	
R3	605	800+23.08 (T71NB)	900+96.14 (P2)	LT	74																		
R4	605	796+09.08 (TP2C)	798+33.17 (TP2C)	LT			223																
R5	605	796+09.08 (TP2C)	798+46.97 (TP2C)	LT						237													
R6	605	797+80.00 (T71NB)	901+00.00 (P2)	LT					326		2												
R7	605	797+52.15 (T71NB)	798+42.55 (T71NB)	RT						103													
R8	605	797+52.15 (T71NB)	798+30.25(T71NB)	RT			80																
R9	605	798+11.72 (T71NB)	901+00.00 (P2)	L/R			290																
R11	605	798+11.83 (T71NB)	901+00.00 (P2)	LT			289																
R12	605	795+95.18 (T71NB)	901+00.00 (P2)	LT			497																
R13	605	895+98.65 (T70WB)	987+33.62 (T71SB)	L/R			506																
R14	605	895+98.65 (T70WB)	987+33.62 (T71SB)	L/R						506													
R15	605	796+50.30(TP2C)	223+47.04 (TI70WB)	L/R				232			3	2											
R17	605	797+49.19 (T71NB)	223+83.29 (T70WB)	LT/RT				80			1	1											
R18	605	798+60.78 (T71NB)	798+84.83 (T71NB)	L/R				70				1	1										
R19	605	898+58.72 (T71NB)	899+41.14 (T71NB)	L/R				126			1		1										
R21	605	900+38.19 (P2)	900+35.19 (P2)	LT				37															
R22	605	898+26.65 (P2)	899+41.14 (P2)	RT				7						110									
G1	605	797+52.15 (T71NB)	799+14.65 (T71NB)	RT												100.00	1	1					
G2	605	797+91.00 (TP2C)	799+15.40 (TP2C)	LT												50.00	1					3	1
G3	605	221+87.67 (T70WB)	225+48.93 (T70WB)	RT												312.50	1					4	
G4	605	222+36.60 (T71SB)	223+61.00 (T71SB)	LT												50.00	1					6	1
C1	605	795+95.24 (T71NB)	797+72.89 (T71NB)	LT																175			
C2	605	797+91.00 (TP2C)	798+09.15 (TP2C)	LT																18			
C3	605	223+42.85 (T71SB)	223+61.00 (T71SB)	LT																18			
P1	605	221+24.52 (T71EB)	225+42.97 (T71EB)	RT																	0.08		
P2	605	221+24.52 (T71EB)	225+42.97 (T71EB)	LT																	0.08		
F1	605	800+23.08 (T71NB)	900+96.14 (P2)	LT															74				
TOTALS CARRIED TO SUB-SUMMARY					74	7	1885	552	326	846	7	4	2	0	110	384	0	513	4	1	74	211	0.16	13	2

CALCULATED JAP
CHECKED TAZ

ESTIMATED QUANTITIES

FRA-70-14.54

606
2317

PLOT.CEL

ms consultants, inc.
msconsultants.com

www.msconsultants.com
Ohio DOT Workspace
70\71 East Interchange 2E

1" 0.5" 0

Batchplot Spec: \\msconsultants.com\files\production\03\60\06634_2E\standards\plotdrv\batchplt.spc
Pen Table: N:\03\60\06634_2E\standards\tables\V8i_ms_std_06634_2D_Plan View_NoClouds.tbl
Plot Driver: \\msconsultants.com\files\Standards\ustn\ohdot\v8i\ms\plotting\PDF.pltcfg
PDF: ohdot\V8i
JOB#: 60-06634_2E_Columbus

Model: Sheet
Printed: 10/24/2018 @ 1:38:19 PM
File: N:\03\60\06634_2E\roadway\sheets\1053226Q010A.dgn
View: FENCE_VIEW1
By: hbrendinger

34" x 22"

REF. NO.	SHEET NO.	STATION I-70 - (I70) TRANS RAMP P2 (Central) - (TP2C) RAMP P2 - (P2) TRANS I-71 NB - (T71NB) TRANS I-71 SB (E) - (T71EB) TRANS I-70WB - (T70WB)		SIDE	512	622	622	622	622	622				626	670									
		FROM	TO		SEALING OF CONCRETE SURFACES	CONCRETE BARRIER, SINGLE SLOPE, TYPE D	CONCRETE BARRIER END SECTION, TYPE D	CONCRETE BARRIER, END ANCHORAGE, REINFORCED, TYPE D	CONCRETE BARRIER, SINGLE SLOPE, TYPE C1	CONCRETE BARRIER END SECTION, TYPE C1, AS PER PLAN				BARRIER REFLECTOR, TYPE 1, BI-DIRECTIONAL	DITCH EROSION PROTECTION MAT, TYPE B									
					SQ YD	FT	EACH	EACH	FT	EACH				EACH	SQ YD								
B1	605	796+02.42 (TRP2C)	797+40.04 (TRP2C)	LT		122		1						3									
B2	605	797+60.13 (TRP2C)	797+91.00 (TRP2C)	LT		3	1	1						2									
B3	605	223+61.00 (T71SB)	225+42.97 (T71SB)	LT					152	1				8									
S1	605	796+02.42 (TRP2C)	797+91.00 (TRP2C)	LT	171																		
S2	605	223+61.00 (T71SB)	225+42.97 (T71SB)	LT	258																		
E1	605	798+00.00 (T71NB)	901+00.00 (P2)	RT											254								
E2	605	900+26.66 (P2)	901+00.00 (P2)	LT											90								
E3	605	220+46.15 (T71SB)	222+50.00 (T71SB)	LT											174								
TOTALS CARRIED TO SUB-SUMMARY					429	125	1	2	152	1				13	518								

CALCULATED JAP
CHECKED TAZ

ESTIMATED QUANTITIES

FRA-70-14.54

607
2317

PLOT.CEL

ms consultants, inc.
msconsultants.com

www.msconsultants.com
Ohio DOT Workspace
70\71 East Interchange 2E

1"
0.5"
0

ODF: ohdot\V8i
PCF: 60-06634_2E_Columbus

Batchplot Spec: \\msconsultants.com\files\production\03\60\06634_2E\standards\plotdrv\batchplt.spc
Pen Table: N:\03\60\06634_2E\standards\tables\V8i_ms_std_06634_2D_Plan View.tbl
Plot Driver: \\msconsultants.com\files\Standards\ustn\ohdot\v8i\ms\plotting\PDF.pltcfg

Model: Sheet
Printed: 6/19/2018 @ 8:35:02 AM View: FENCE_VIEW1
File: N:\03\60\06634_2E\roadway\sheets\105322600108.dgn By: jdougas

34" x 22"

REF. NO.	SHEET NO.	STATION FROM	STATION TO	SIDE		611 15" CONDUIT, TYPE C FT	611 30" CONDUIT, TYPE C FT	611 30" CONDUIT, TYPE B FT	611 36" CONDUIT, TYPE B FT		611 INLET, NO. 3 FOR SINGLE SLOPE BARRIER, TYPE D EACH		611 MANHOLE ADJUSTED TO GRADE EACH		611 MANHOLE, NO. 3 EACH	611 MANHOLE, NO. 3, AS PER PLAN EACH
		TRANS RAMP P2 - (TP2) *TRANS 71NB - (T71NB)* *RAMP P2 - (P2)* *INTERSTATE 70 - (I70)*														
D1	605	797+50.08 (TP2)	797+50.77 (TP2)	LT		15					1					
D2	605	797+44.70 (TP2)	797+50.77 (TP2)	LT		6									1	
D3	605	900+38.19 (P2)	797+80.00 (T71NB)	LT		10	249								1	
D4	605	797+80.00 (T71NB)	797+80.00 (T71NB)	LT				42	6						1	1
D5	605	796+53.14 (T71NB)		LT									1			
TOTALS CARRIED TO SUB-SUMMARY						31	249	42	6		1		1		3	1

CALCULATED JAP
CHECKED TAZ

ESTIMATED QUANTITIES

FRA-70-14.54

608
2317

PLOT.CEL

ms consultants, inc.
msconsultants.com

CROSS REFERENCES	
SHEET NO	DESCRIPTION
	PROFILE(S)
676-681	I-70 EB
686-687	TRANS RAMP P2 WEST
688-690	TRANS I-70 WB (EAST SIDE)
691-693	TRANS I-71 SB (EAST SIDE)
694	TRANS I-71 NB
1163	GORE DETAILS
1257B, 1258B, D, E, F	STORM SEWER PROFILES
1147	GRADING DETAIL

NOTE 1: BARRIER REFLECTORS SHALL BE INSTALLED AT 25' O.C. ALONG SOUTH FACE OF BARRIER FROM STA. 225+42.97 TO STA. 230+43.23.

(A) STA. 802+72.68 ℄ TRANS RAMP P2 = STA. 228+39.23, 36.0' LT ℄ TRANS I-70 WB (EAST SIDE)

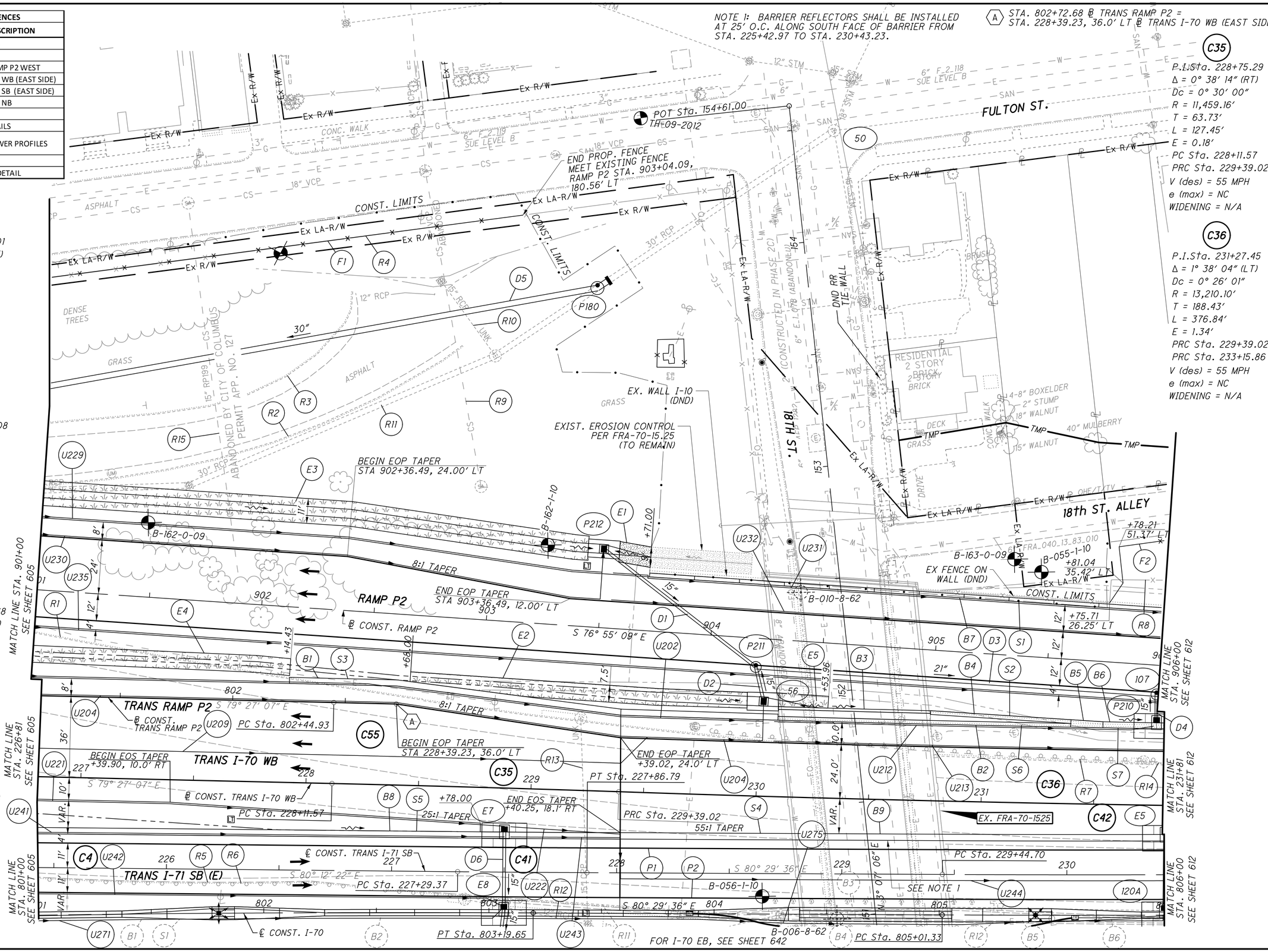

C4
P.I. STA. 801+19.01
Δ = 2° 00' 24" (RT)
Dc = 0° 30' 00"
R = 11,459.16'
T = 200.69'
L = 401.33'
E = 1.76'
PC = 799+18.32
PT = 803+19.65
V (des) = 60 MPH
e (max) = NC
WIDENING = N/A

C41
P.I.Sta. 227+58.08
Δ = 0° 17' 14" (LT)
Dc = 0° 30' 00"
R = 11,459.16'
T = 28.71'
L = 57.43'
E = 0.04'
PC = 227+29.37
PT = 227+86.79
V (des) = 55 MPH
e (max) = NC
WIDENING = N/A

C42
P.I.Sta. 230+07.68
Δ = 0° 32' 48" (LT)
Dc = 0° 26' 02"
R = 13,204.11'
T = 62.98'
L = 125.96'
E = 0.15'
PC = 229+44.70
PT = 230+70.65
V (des) = 55 MPH
e (max) = NC
WIDENING = N/A

C55
P.I.Sta. 802+58.80
Δ = 0° 08' 18" (RT)
Dc = 0° 29' 54"
R = 11,495.16'
T = 13.88'
L = 27.75'
E = 0.01'
PC = 802+44.93
PT = 802+72.68
V (des) = 50 MPH
e (max) = NC
WIDENING = N/A

C35
P.I.Sta. 228+75.29
Δ = 0° 38' 14" (RT)
Dc = 0° 30' 00"
R = 11,459.16'
T = 63.73'
L = 127.45'
E = 0.18'
PC Sta. 228+11.57
PRC Sta. 229+39.02
V (des) = 55 MPH
e (max) = NC
WIDENING = N/A

C36
P.I.Sta. 231+27.45
Δ = 1° 38' 04" (LT)
Dc = 0° 26' 01"
R = 13,210.10'
T = 188.43'
L = 376.84'
E = 1.34'
PRC Sta. 229+39.02
PRC Sta. 233+15.86
V (des) = 55 MPH
e (max) = NC
WIDENING = N/A

HORIZONTAL SCALE IN FEET 0 10 20 40

CALCULATED | CHECKED

PLAN - I-70 WESTBOUND
STA. 801+00 TO STA. 806+00

FRA-70-14.54

ms consultants, inc.

PLOT.CEL
ms consultants, inc.
msconsultants.com
www.msconsultants.com
Ohio DOT Workspace
70\71 East Interchange 2E
1" 0.5" 0
Batchplot Spec: \\msconsultants.com\files\production\Q3\60\06634_2E\standards\plotdrv\batchplt.spc
Pen Table: N:\Q3\60\06634_2E\standards\tables\V8i_ms_std_06634_2D_Plan View_NoClouds.tbl
Plot Driver: \\msconsultants.com\files\Standards\ustn\ohdot\v8i\ms\plotting\PDF.pltcfg
PDF: ohdot\V8i
JOB#: 60-06634_2E_Columbus
34" x 22"
Model: Sheet
Printed: 10/24/2018 @ 1:38:29 PM
File: N:\Q3\60\06634_2E\roadway\sheets\105322G001.dgn
View: FENCE_VIEW1
By: hbrendinger

REF. NO.	SHEET NO.	STATION FROM	STATION TO	SIDE	202 CURB REMOVED (FT)	202 PIPE REMOVED, 24" AND UNDER (FT)	202 PIPE REMOVED, OVER 24" (FT)	202 GUARDRAIL REMOVED (FT)	202 MANHOLE REMOVED (EACH)	202 CATCH BASIN REMOVED (EACH)	202 INLET REMOVED (EACH)	202 FENCE REMOVED (FT)	512 SEALING OF CONCRETE SURFACES (SQ YD)	607 FENCE, TYPE CL (FT)		626 BARRIER REFLECTOR, TYPE 1, ONE-WAY (EACH)	622 CONCRETE BARRIER, SINGLE SLOPE, TYPE D (FT)	622 CONCRETE BARRIER, END ANCHORAGE, REINFORCED, TYPE D (EACH)	622 CONCRETE BARRIER, SINGLE SLOPE, TYPE C (FT)	622 CONCRETE BARRIER, END ANCHORAGE, REINFORCED, TYPE C, AS PER PLAN "A" (EACH)	622 CONCRETE BARRIER, END ANCHORAGE, REINFORCED, TYPE C (EACH)	626 BARRIER REFLECTOR, TYPE 1, BI-DIRECTIONAL (EACH)	622 CONCRETE BARRIER, TYPE C1 (FT)	622 CONCRETE BARRIER, END ANCHORAGE, REINFORCED, TYPE C1 (EACH)	618 EDGE LINE, RUMBLE STRIPE (ASPHALT CONCRETE) (MILE)
		I-70 - (I70)																								
		TRANS RAMP P2 (Central) - (TP2C)																								
		RAMP P2 - (P2)																								
		TRANS I-71 NB - (T71NB)																								
		TRANS I-71 SB (E) - (T71EB)																								
		TRANS I-70WB - (T70WB)																								
R1	609	901+00.00 (P2)	906+04.42(P2)	RT	506																					
R2	609	901+00.00 (P2)	902+81.17 (P2)	LT	198																					
R3	609	901+00.00 (P2)	902+30.93 (P2)	LT	159																					
R4	609	900+96.14 (P2)	903+04.09 (P2)	LT								212														
R5	609	801+00.00 (I70)	803+18.39 (I70)	LT				219																		
R6	609	801+00.00 (I70)	803+99.46 (I70)	LT	300																					
R7	609	229+78.80 (T70WB)	231+80.77 (T70WB)	LT				201																		
R8	609	905+75.71 (P2)	906+00.00 (P2)	LT								35														
R9	609	902+69.92 (P2)	902+93.63 (P2)	LT		94			1																	
R10	609	902+69.92 (P2)	902+96.09 (P2)	LT		41				1																
R11	609	901+00.00 (P2)	903+44.67 (P2)	LT			274		1	1																
R12	609	802+89.17 (I70)	803+43.98 (I70)	LT/RT		56					1															
R13	609	903+44.74 (P2)	227+87.34 (T71SB)	LT/RT		92					1															
R14	609	231+71.99 (T70WB)	231+80.78 (T70WB)	LT		9					1															
R15	609	901+59.18 (P2)	901+88.42 (P2)	LT		145																				
F1	609	900+96.14 (P2)	903+04.09 (P2)	LT										212												
F2	609	905+75.71 (P2)	906+00.00 (P2)	LT										49												
B1	609	227+91.64 (T70WB)	230+08.77 (T70WB)	LT																188		2	3			
B2	609	230+08.77 (T70WB)	231+39.12 (T70WB)	LT												2	100	2								
B3	609	904+31.99 (P2)	904+99.60 (P2)	RT													38	2								
B4	609	904+99.60 (P2)	905+62.10 (P2)	RT													33	2								
B5	609	231+39.12 (T70WB)	231+53.48 (T70WB)	LT																	1					
B6	609	231+53.48 (T70WB)	231+80.80 (T70WB)	LT												2						1				
B7	609	903+71.00 (P2)	906+00.00 (P2)	LT													214	1					3			
B8	609	225+42.97(T71SB)	227+40.00 (T71SB)	LT																			11	182	1	
B9	609	227+60.02 (T71SB)	230+33.62 (T71SB)	LT																			16	243	2	
S1	609	903+71.00 (P2)	906+00.00 (P2)	LT									206													
S2	609	904+31.99 (P2)	905+62.10 (P2)	RT									117													
S3	609	227+91.64 (T70WB)	230+08.77 (T70WB)	LT									247													
S4	609	228+01.48 (T71SB)	230+43.23(T71SB)	LT									327													
S5	609	225+42.97(T71SB)	228+01.48 (T71SB)	LT									365													
S6	609	230+08.77 (T70WB)	231+39.12 (T70WB)	LT									117													
S7	609	231+39.12 (T70WB)	231+80.80 (T70WB)	LT									47													
P1	610	225+42.97 (T71EB)	230+43.23 (T71EB)	LT																						0.09
P2	610	225+42.97 (T71EB)	230+43.23 (T71EB)	RT																						0.09
TOTALS CARRIED TO SUB-SUMMARY					1163	437	274	420	2	2	3	247	1426	261		4	385	7	188	1	3	33	425	3	0.18	

CALCULATED JAP
CHECKED TAZ

ESTIMATED QUANTITIES

FRA-70-14.54

ms consultants, inc.

PLOT.CEL

ms consultants, inc.
msconsultants.com

www.msconsultants.com
70\71 East Interchange 2E
Ohio DOT Workspace

1" 0.5" 0

PCF: 60-06634_2E_Columbus
DGN: ohdot\V8i

Batchplot Spec: \\msconsultants.com\files\production\Q3\60\06634_2E\standards\plotdrv\batchplt.spc
Pen Table: N:\03\60\06634_2E\standards\tables\V8i_ms_std_06634_2D_Plan View.tbl
Plot Driver: \\msconsultants.com\files\Standards\ustn\ohdot\v8i\ms\plotting\PDF.pltcfg

34" x 22"

Model: Sheet
Printed: 6/1/2018 @ 2:07:15 PM View: FENCE_VIEW1
File: N:\03\60\06634_2E\roadway\sheets\1053226Q01A.dgn By: jdougas

REF. NO.	SHEET NO.	STATION		SIDE	601 TIED CONCRETE BLOCK MAT, TYPE 2	670 DITCH EROSION PROTECTION MAT, TYPE B	611 15" CONDUIT, TYPE B	611 21" CONDUIT, TYPE B	611 30" CONDUIT, TYPE C	611 CATCH BASIN, NO. 8	611 INLET, NO. 3 FOR SINGLE SLOPE BARRIER, TYPE C	611 INLET, NO. 3 FOR SINGLE SLOPE BARRIER, TYPE C1	611 MANHOLE, NO. 3	611 MANHOLE, NO. 3, AS PER PLAN	601 RIPRAP, TYPE D , AS PER PLAN
		RAMP P2 - (P2) I-70 - (I70)													
		FROM	TO		SQ YD	SQ YD	FT	FT	FT	EACH	EACH	EACH	EACH	EACH	SQ YD
D1	609	903+50.07 (P2)	904+20.79 (P2)	L/R			85			1					
D2	609	904+25.33 (P2)	904+20.79 (P2)	RT			16			1					
D3	609	904+20.79 (P2)	905+99.18 (P2)	RT				178						1	
D4	609	906+00.02 (P2)	905+99.18 (P2)	RT			13				1				10
D5	609	900+35.19 (P2)	903+44.04 (P2)	LT					319				1		
D6	609	803+06.74 (I70)	803+06.59 (I70)	LT			35					1			
E1	609	903+57.00 (P2)	903+71.00 (P2)	LT	14										
E2	609	902+68.00 (P2)	904+18.00 (P2)	RT		115									
E3	609	901+00.00 (P2)	903+43.32 (P2)	LT		297									
E4	609	901+00.00 (P2)	902+14.43 (P2)	RT		95									
E5	609	904+31.83 (P2)	904+53.96 (P2)	RT		14									
TOTALS CARRIED TO SUB-SUMMARY					14	521	149	178	319	2	1	1	1	1	10

CALCULATED JAP
CHECKED TAZ

ESTIMATED QUANTITIES

FRA-70-14.54

611
2317

PLOT.CEL

ms consultants, inc.
msconsultants.com

Ohio DOT Workspace
70\71 East Interchange 2E
www.msconsultants.com

0 0.5" 1"

34" x 22"

Batchplot Spec: \\msconsultants.com\files\production\03\60\06634_2E\standards\plotdrv\batchplt.spc
Pen Table: N:\03\60\06634_2E\roadway\tables\V8i_ms_std_06634_2D_Plan View.tbl
Plot Driver: \\msconsultants.com\files\Standards\usetn\ohdot\v8i\ms\plotting\PDF.pltcfg

Model: Sheet
Printed: 6/19/2018 @ 8:36:25 AM By: jdouglas
File: N:\03\60\06634_2E\roadway\sheets\D05226P012.dgn
View: FENCE_VIEW1

OPT: ohdotV8i
PCF: 60-06634_2E_Columbus

CROSS REFERENCES	
SHEET NO	DESCRIPTION
	PROFILE(S)
676-681	I-70 EB
688-690	TRANS I-70 WB (EAST SIDE)
691-693	TRANS I-71 SB (EAST SIDE)
694	TRANS I-71 NB
1164-1165	GORE DETAILS
1258B-C, E-G	STORM SEWER PROFILES
1147	GRADING DETAIL

C5
P.I. STA. 806+18.18
Δ = 1° 00′ 46″ (LT)
Dc = 0° 26′ 00″
R = 13,222.10′
T = 116.85′
L = 233.70′
E = 0.52′
PC = 805+01.33
PT = 807+35.03
V (des) = 60 MPH
e (max) = NC
WIDENING = N/A

C43
P.I.Sta. 232+83.85
Δ = 2° 07′ 54″ (RT)
Dc = 0° 30′ 00″
R = 11,459.16′
T = 213.20′
L = 426.35′
E = 1.98′
PRC Sta. 230+70.65
PRC Sta. 234+97.00
V (des) = 55 MPH
e (max) = NC
WIDENING = N/A

C37
P.I.Sta. 234+82.91
Δ = 1° 40′ 14″ (RT)
Dc = 0° 30′ 00″
R = 11,459.16′
T = 167.06′
L = 334.09′
E = 1.22′
PRC Sta. 233+15.86
PRC Sta. 236+49.95
V (des) = 55 MPH
e (max) = NC
WIDENING = N/A

C71
P.I.Sta. 60+81.18
Δ = 4° 21′ 32″ (LT)
Dc = 0° 45′ 00″
R = 7,639.44′
T = 290.73′
L = 581.19′
E = 5.53′
PC = 57+90.44
PT = 63+71.63
V (des) = 55 MPH
e (max) = 0.018
WIDENING = N/A

Ⓐ STA 231+78.08 ℄ TRANS I-71 SB =
STA 807+35.02, 17.05′ LT ℄ I-70 =
STA 233+16.40, 29.25′ RT ℄ TRANS I-70 WB

Ⓑ END WORK STA 233+15.86 ℄ TRANS I-70 WB =
STA 807+35.02, 46.30′ LT ℄ I-70

Ⓒ END WORK STA 907+33.78, ℄ RAMP P2 =
BEGIN WORK P.I. STA 57+33.78 DEF. = 1° 0′ 00″
℄ TRANS RAMP P2 =
STA 807+32.94, 100.97′ LT, ℄ I-70

Ⓓ BEGIN WORK STA 57+32.94, ℄ TRANS RAMP P2 =
STA 907+33.78, 4.00′ LT ℄ RAMP P2

NOTE:
ATTENUATOR DESIGN INFORMATION
@ TRANS I-70 WB STA 232+19.09 LT
DESIGN SPEED = 55 MPH
HAZARD WIDTH = 24″

NOTE 1: BARRIER REFLECTORS SHALL BE INSTALLED AT 25′ O.C. ALONG SOUTH FACE OF BARRIER FROM STA. 230+43.23 TO STA. 235+43.07.

E. FULTON ST.
CARPENTER ST.
ALLEY
Ex R/W
Ex LA-R/W
Ex SW
2-STORY BRICK
2-CAR CONC. BLOCK GARAGE
ASPHALT DRIVE
2-STORY BRICK APT. BLDG
2-STORY HOUSE
DECK
16″ HACKBERRY
18″ HACKBERRY
4″ PEAR
4″ PINE
2″ PINE
10″ WALNUT
8″ WALNUT
12″ SPRUCE
END RDWY. WORK RAMP P2 STA. 907+33.78
BEGIN RDWY. WORK TRANS RAMP P2 STA. 57+33.78
END PROJECT ℄ I-70 STA. 807+35.02 S.L.M. 15.30
E040 (632)
END RDWY. WORK I-70 STA. 807+35.02 TRANS I-71 SB STA. 231+78.08
BEGIN RDWY. WORK TRANS I-70 WB STA. 233+15.86
SAWCUT
SUE LEVEL B
OHE/T/TV
SAN
8″ VCP
6″ WC
CONC.
CONC. WALK
CONC. SHED
ASPHALT
EX WALL I-10 (DND)
EXIST. EROSION CONTROL PER FRA-70-15.25 (TO REMAIN)
CONNECT EX. WALL DRAINAGE TO INLET 85
CONST. LIMITS
℄ CONST. RAMP P2
℄ CONST. TRANS RAMP P2 (E)
℄ CONST. TRANS I-70 WB
℄ CONST. TRANS I-71 SB
℄ I-70
TRANS RAMP P2
TRANS I-70 WB
TRANS I-71SB (E)
PC Sta. 57+90.44
PRC Sta. 230+70.65
PRC Sta. 234+97.00
+30.03, 143.60′ LT ℄ TRANS RAMP P2
+36.64, 104.58′ LT ℄ TRANS RAMP P2
906+41.22 16.00′ RT (P2) N 76° 55′ 09″ E
+33.78 24.00′ LT
+33.38 26.49′ LT
+33.38 22.00′ LT
+75.00 34.43′ LT
+41.76 (P2) 26.00′ RT
+19.09 24.00′ LT
+35.04 1.41′ LT
+95.08 11.0′ RT
+80.34 27.64′ LT
+45.13 26.00′ LT
+45.13 24.00′ LT
+54.64 LON
B-055-3-10
B-056-0-08
B-057-0-08
B-058-0-10
55:1 TAPER
MATCH LINE STA. 906+00 SEE SHEET 609
MATCH LINE STA. 231+80.74 SEE SHEET 609
MATCH LINE STA. 230+43.23 SEE SHEET 609
MATCH LINE STA. 61+00 SEE SHEET 649
MATCH LINE STA. 235+43.22 SEE SHEET 649
SEE NOTE 1
FOR I-70 EB, SEE SHEET 646

PLAN - I-70 WESTBOUND
STA. 806+00 TO STA. 811+00

FRA-70-14.54

612
2317

HORIZONTAL SCALE IN FEET
0 10 20 40

CALCULATED
CHECKED

PLOT.CEL

ms consultants, inc.
msconsultants.com

Ohio DOT Workspace
70\71 East Interchange 2E
www.msconsultants.com

1" 0.5" 0

ODF: ohdot\V8i
PCF: 60-06634_2E_Columbus

34" x 22"

Batchplot Spec: \\msconsultants.com\files\production\03\60\06634_2E\standards\plotdrv\batchplt.spc
Pen Table: N:\03\60\06634_2E\standards\tables\V8i_ms_std_06634_2D_Plan View.tbl
Plot Driver: \\msconsultants.com\files\Standards\ustn\ohdot\v8i\ms\plotting\PDF.pltcfg

Model: Sheet
Printed: 6/19/2018 @ 8:36:28 AM
File: N:\03\60\06634_2E\roadway\sheets\05322G012.dgn
View: FENCE_VIEW1
By: jdouglas

REF. NO.	SHEET NO.	STATION FROM	STATION TO	SIDE	202 PAVEMENT REMOVED SQ YD	202 CURB REMOVED FT	202 WALK REMOVED SQ FT	202 PIPE REMOVED, 24" AND UNDER FT	202 PIPE REMOVED, OVER 24" FT	202 GUARDRAIL REMOVED FT	202 MANHOLE REMOVED EACH	202 CATCH BASIN REMOVED EACH	202 INLET REMOVED EACH	202 FENCE REMOVED FT	202 BUILDING DEMOLISHED, PARCEL NO. 135-WL, PLAYHOUSE EACH	202 REMOVAL MISC.: RAILROAD TIE WALL REMOVED FT	252 FULL DEPTH PAVEMENT SAWING FT
		RAMP P2 - (P2) TRANSITIONAL RAMP P2 - (TP2) TRANSITIONAL I-70 WB - (T70WB)															
R1	612	60+56.96 (TP2)		LT							1						
R2	612	906+00.04 (P4)	58+18.88 (TP2)	L/R						216							
R3	612	906+00.04 (P4)	61+00.58 (TP2)	L/R		499											
R4	612	58+62.06 (TP2)	58+89.49 (TP2)	LT		139											
R5	612	58+58.23 (TP2)	58+72.51 (TP2)	LT			27										
R6	612	58+62.06 (TP2)	58+99.09 (TP2)	LT	160												
R7	612	58+62.06 (TP2)	58+89.51 (TP2)	LT													28
R8	612	58+72.05 (TP2)	58+98.85 (TP2)	LT						27							
R9	612	58+89.37 (TP2)	59+03.54 (TP2)	LT			30										
R10	612	57+32.94 (P2)	60+99.10 (TP2)	LT										511			
R16	612	59+00.20 (TP2)	59+01.39 (TP2)	LT												22	
R22	612	60+85.97 (TP2)	61+00.00 (TP2)	LT											1		
R23	612	906+54.04 (P2)	61+00.00 (TP2)	L/R				187	261		1						
R24	612	232+30.77 (T70WB)	232+31.15 (T70WB)	L/R					77		1						
R25	612	232+31.15 (T70WB)	232+70.83 (T70WB)	LT				41					1				
R26	612	58+70.60 (TP2)	59+13.66 (TP2)	L/R				106					2				
R27	612	231+80.78 (T70WB)	232+31.15 (T70WB)	LT				62				2					
TOTALS CARRIED TO SUB-SUMMARY					160	638	57	396	338	243	3	2	3	511	1	22	28

CALCULATED JAP
CHECKED TAZ

ESTIMATED QUANTITIES

FRA-70-14.54

ms consultants, inc.

PLOT.CEL

ms consultants, inc.
msconsultants.com

www.msconsultants.com
70\71 East Interchange 2E
Ohio DOT Workspace

0 0.5" 1"

Batchplot Spec: \\msconsultants.com\files\production\Q3\60\06634_2E\standards\plotdrv\batchplt.spc
Pen Table: N:\03\60\06634_2E\standards\tables\V8i_ms_std_06634_2D_Plan View_NoClouds.tbl
Plot Driver: \\msconsultants.com\files\Standards\ustn\ohdot\v8i\ms\plotting\PDF.pltcfg
PDF: ohdot\V8i

Model: Sheet
Printed: 10/24/2018 @ 1:38:42 PM
File: N:\03\60\06634_2E\roadway\sheets\1053226001A.dgn
View: FENCE_VIEW1
By: hbrendinger

34" x 22"

REF. NO.	SHEET NO.	STATION FROM	STATION TO	SIDE	512 SEALING OF CONCRETE SURFACES (SQ YD)	606 GUARDRAIL, TYPE MGS (FT)	606 ANCHOR ASSEMBLY, MGS TYPE E (MASH 2016) (EACH)	606 MGS BRIDGE TERMINAL ASSEMBLY, TYPE 1 (EACH)	606 IMPACT ATTENUATOR, TYPE 1 (UNIDIRECTIONAL) (EACH)	607 FENCE, TYPE CL (FT)	622 CONCRETE BARRIER, SINGLE SLOPE, TYPE C1 (FT)	622 CONCRETE BARRIER, END ANCHORAGE, REINFORCED, TYPE C1 (EACH)	622 CONCRETE BARRIER, SINGLE SLOPE, TYPE D (FT)	622 CONCRETE BARRIER END SECTION, TYPE D (EACH)	622 CONCRETE BARRIER, END ANCHORAGE, REINFORCED, TYPE D (EACH)	622 CONCRETE BARRIER END SECTION, TYPE B (EACH)	622 CONCRETE BARRIER, END ANCHORAGE, REINFORCED, TYPE C (EACH)	626 BARRIER REFLECTOR, TYPE 1, BI-DIRECTIONAL (EACH)	601 TIED CONCRETE BLOCK MAT, TYPE 2 (SQ YD)	618 EDGE LINE, RUMBLE STRIPE (ASPHALT CONCRETE) (MILE)	670 DITCH EROSION PROTECTION MAT, TYPE B (SQ YD)	622 CONCRETE BARRIER, SINGLE SLOPE, TYPE C (FT)	626 BARRIER REFLECTOR, TYPE 2, BI-DIRECTIONAL (EACH)	626 BARRIER REFLECTOR, TYPE 1, ONE-WAY (EACH)	
		RAMP P2 - (P2) TRANSITIONAL I-71SB (E) - (T7171SB) TRANSITIONAL RAMP P2 - (TP2)																								
B1	612	906+00.00 (P2)	907+14.54 (TP2)	LT									100		1			2								
B2	612	57+34.12 (TP2)	57+77.33(TP2)	LT									13		2			1								
B3	612	57+97.35 (TP2)	58+33.38 (TP2)	LT									6		2			1								
B4	612	231+87.38 (T70WB)	232+19.09 (T70WB)	LT												1	1						3		1	
B5	612	231+91.92 (T70WB)	232+45.42 (T70WB)	RT							24	2						4								
B6	612	233+67.49 (T70WB)	235+62.35 (T70WB)	RT							165	2						12								
B7	612	235+70.36 (T70WB)	235+95.03 (T70WB)	RT								2						3								
B8	612	236+05.04 (T70WB)	236+81.21 (T70WB)	RT							61	1						5								
B9	612	58+33.38 (TP2)	58+67.48 (TP2E)	LT									5	1	1			2								
B10	612	232+65.40 (T70WB)	233+30.09 (T70WB)	RT							35	2						6								
B11	612	233+50.11 (T70WB)	233+59.48 (T70WB)	RT								1														
E1	612	58+33.30 (TP2)	58+47.78 (TP2)	LT															17							
E2	612	58+33.38 (TP2)	58+93.39 (TP2)	LT																		45				
E3	612	59+07.45 (TP2)	60+19.13 (TP2)	LT																		94				
E4	612	60+33.18 (TP2)	61+00.00 (TP2)	LT																		59				
G1	612	232+19.09 (T70WB)	232+46.24 (T70WB)	LT					1																	
G2	612	58+67.48 (TP2E)	59+67.18 (TP2E)	LT		25	1	1																3		
G3	612	58+63.72 (TP2E)	58+88.63 (TP2E)	LT		25																				
F1	612	906+00.00 (P2)	61+00.00 (TP2)	LT						537																
S1	612	906+00.00 (P2)	58+32.86 (TP2)	LT	210																					
S2	612	231+80.80 (T70WB)	232+19.89 (T70WB)	LT	44																					
S3	612	231+81.56 (T70WB)	236+81.21 (T70WB)	RT	705																					
S4	612	58+33.38 (TP2E)	58+67.48 (TP2E)	LT	32																					
P1	612	230+43.23 (T71SB)	235+43.07 (T71SB)	LT																0.09						
P2	612	230+43.23 (T71SB)	235+43.07 (T71SB)	RT																0.09						
TOTALS CARRIED TO SUB-SUMMARY					991	50	1	1	1	537	285	10	124	1	6	1	1	36	17	0.18	198	3	3	1		

CALCULATED JAP
CHECKED TAZ

ESTIMATED QUANTITIES

FRA-70-14.54

ms consultants, inc.

PLOT.CEL

ms consultants, inc.
msconsultants.com

www.msconsultants.com
70\71 East Interchange 2E
Ohio DOT Workspace

1"
0.5"
0

PCF: 60-06634_2E_Columbus
ODF: ohdot\V8i

Batchplot Spec: \\msconsultants.com\files\production\03\60\06634_2E\standards\plotdr\batchplt.spc
Pen Table: N:\03\60\06634_2E\standards\tables\V8i_ms_std_06634_2D_Plan View.tbl
Plot Driver: \\msconsultants.com\files\Standards\ustn\ohdot\v8i\ms\plotting\PDF.pltcfg

Model: Sheet
Printed: 6/19/2018 @ 8:36:55 AM View: FENCE_VIEW1
File: N:\03\60\06634_2E\roadway\sheets\1053220G012B.dgn By: jdouglas

34" x 22"

REF. NO.	SHEET NO.	STATION FROM	STATION TO	SIDE	518 6" NON-PERFORATED CORRUGATED PLASTIC PIPE, INCLUDING SPECIALS (FT)	611 6" CONDUIT, TYPE B (FT)	611 15" CONDUIT, TYPE B (FT)		611 21" CONDUIT, TYPE B (FT)	611 24" CONDUIT, TYPE B (FT)	611 22" X 34" CONDUIT, TYPE B, 706.04 (FT)	611 36" CONDUIT, TYPE B (FT)			611 CATCH BASIN, NO. 8 (EACH)	611 INLET, NO. 3 FOR SINGLE SLOPE BARRIER, TYPE B1 (EACH)	611 INLET, NO. 3 FOR SINGLE SLOPE BARRIER, TYPE C1 (EACH)	611 INLET, NO. 3 FOR SINGLE SLOPE BARRIER, TYPE D (EACH)		611 MANHOLE, NO. 3, AS PER PLAN (EACH)	611 MANHOLE, NO. 3, AS PER PLAN "A" (EACH)	839 TRENCH DRAIN WITH STANDARD GRATE (FT)			
D1	612	905+99.18 (P2)	906+78.04 (P2)	RT					79											1						
D2	612	906+78.04 (P2)	232+55.39 (T70WB)	LT/RT								48									1					
D3	612	232+55.39 (T70WB)	806+73.35 (I70)	L/R								34					1									
D4	612	907+24.49 (P2)	906+78.04 (P2)	L/R							60									1						
D5	612	907+24.54 (P2)	907+24.49 (P2)	LT			7											1								
D6	612	57+87.38 (TP2)	907+24.49 (P2)	LT							63									1						
D7	612	57+87.37 (TP2)	58+34.09 (TP2)	LT	45		8											1								
D8	612	59+00.00 (TP2)	57+87.38 (TP2)	LT						112										1						
D9	612	59+00.00 (TP2)	59+00.00 (TP2)	LT			15								1											
D10	612	60+22.63 (TP2)	59+00.00 (TP2)	LT						122										1						
D11	612	60+26.15 (TP2)	60+22.63 (TP2)	LT			14								1											
D12	612	62+50.24 (TP2)	60+22.63 (TP2)	LT						227										1						
D13	612	906+78.04 (P2)	53+03.20 (TP2)	RT		19																		206		
D14	612	232+01.77 (T71SB)	806+73.35 (I70)	RT/CL			85									1										
D15	612	806+00.00 (I70)	806+73.35 (I70)	CL			73									1										
D16	612	806+00.40 (I70)	806+00.00 (I70)	LT			34											1								
D17	612	232+01.74 (T71SB)	232+01.77 (T71SB)	L/R			33											1								
TOTALS CARRIED TO SUB-SUMMARY					45	19	269	0	79	461	123	82			2	2	3	2		6	1	206				

CALCULATED JAP
CHECKED TAZ

ESTIMATED QUANTITIES

FRA-70-14.54

615
2317

ms consultants, inc.

PLOT.CEL

ms consultants, inc.
msconsultants.com

Ohio DOT Workspace
70\71 East Interchange 2E
www.msconsultants.com

Batchplot Spec: \\msconsultants.com\files\Production\03\60\06634.2E\standards\plotdrv\batchplt.spc
Pen Table: \\msconsultants.com\files\Production\03\60\06634.2E\standards\tables\V8i_ms.tbl
Plot Driver: \\msconsultants.com\files\Standards\usetn\ohdot\v8i\ms\plotting\PDF.prc\g

Model: Sheet
Printed: 1/17/2019 @ 2:13:18 PM
File: \\msconsultants.com\files\Production\03\60\06634.2E\roadway\sheets\1053220P013.dgn
View: SHEET
By: dhall

34" x 22"

PC Sta. 767+65.33

FOR I-70 WB, SEE SHEET 588

BEGIN EOS TAPER
+89.70, 1.41' RT

℄ CONST. I-70

N 83° 00' 00" E

BULK HEAD PIPE
P.G.

EX. BARRIER CONSTRUCTED
IN FRA-70-14.56

CONST. LIMITS

B-044-1-10

℄ CONST. TRANS I-70 EB

P.G.

STA. 767+13.17, 16.0' RT, TIE
PR. STORM INTO CAPPED OFF
24" PIPE FROM FRA-70-14.56

REMOVE REMAINING
PIERS & FOUNDATION

℄ EX. I-70

TRANS I-70 EB

RAMP N4
PT. STA. 773+41.69

END PVMNT. TAPER
866+98.25, 41.24' RT

50:1 TAPER

MATCH LINE STA. 865+98
SEE SHEET 585

VARIES

ASPHALT

CONCRETE BARRIER

I-70 EB

BEGIN EOP TAPER
+09.88, 16.00' RT

80:1 TAPER

MATCH LINE STA. 771+00
SEE SHEET 620

769+21.59
52.00' RT

769+21.59
54.00' RT

EX. FRA-70-1456

℄ CONST. RAMP N4

N 85° 00' 08" E

RAMP N4

12" RCP

MATCH LINE STA. 777+50
SEE SHEET 620

868+70.86
25.58' LT

B-045-0-08

REMOVE REMAINING
PIERS & FOUNDATION

CONCRETE BARRIER

868+70.86
23.25' LT

END TAPER
+20.86, 6.00' RT

PC Sta. 870+36.97

RAMP N1

℄ CONST. RAMP N1

25:1 TAPER

N 85° 00' 08" E

MATCH LINE STA. 966+00
SEE SHEET -1

℄ CONST. TRANS
RAMP N1

TRANS RAMP N1

+99.97

MATCH LINE
STA. 871+00
SEE SHEET 620

EX. WALL 6W5

CONST. LIMITS

EX. WALL 6W5
CONSTRUCTED IN
FRA-70-14.56

CONNECT EX. WALL
DRAINAGE TO INLET N152

B-001-G-59

Ex LA-R/W

Ex SW

SAN

OHE

CTV

NYS

ABANDONED

B-045-1-10

EX. WALL 6W6
CONSTRUCTED IN
FRA-70-14.56

B-046-0-08

TELE VAULT

6' CHAIN LINK FENCE

DO NOT DISTURB
TELE. VAULT

ASPHALT
PARKING LOT

BASKETBALL
COURT

COC DOT
U.G. MULTIPAIR
CABLE

GRANT AVE.

WV PER SUE LEVEL B

CONC. WALK

ASPHALT
PARKING LOT

CROSS REFERENCES	
SHEET NO	DESCRIPTION
	PROFILE(S)
674-675	TRANS I-70 EB (WEST SIDE)
676-681	I-70 EB
699	TRANS RAMP N1
700-702	RAMP N1
707-708	RAMP N4
1153-1155	GORE DETAILS
1259,1259A-B	STORM SEWER PROFILES
1142	GRADING DETAIL

END WORK
TRANS I-70 EB
STA. 866+98.25
TRANS RAMP N1
STA. 966+99.83

END PROJECT 4
FRA-70-13.54
(FUTURE)

BEGIN WORK
RAMP N1
STA. 866+99.12
RAMP N4
STA. 773+40.85

BEGIN PROJECT
℄ I-70
STA.766+99.84
S.L.M.-14.54

E040 (632)

NOTE:
ATTENUATOR DESIGN INFORMATION
@ STA. N4-775+13.88 RT.
DESIGN SPEED = 60 MPH
HAZARD WIDTH = 24"

Ⓐ END WORK TRANS I-70 EB
STA 866+98.25, ℄ TRANS I-70 EB =
STA 766+99.84, 28.00' RT, ℄ I-70

Ⓑ BEGIN TAPER, 8.00' RT, RAMP N1
STA 868+70.86, ℄ RAMP N1 =
STA 968+71.56, ℄ RAMP TRANS RAMP N1

Ⓒ STA. 866+98.25, ℄ TRANS I-70 EB, 29.23' RT =
STA. 773+40.85, ℄ RAMP N4

Ⓓ STA 966+99.83, ℄ TRANS RAMP N1 =
STA 866+99.12, 1.29' LT ℄ RAMP N1

Ⓔ P.O.C. STA 866+99.12, ℄ RAMP N1 =
STA 91+85.76, 85.83' RT ℄ EX. I-70

Ⓕ STA 766+99.84, 0.00' LT ℄ I-70 =
STA 91+88.84, 31.68' LT ℄ EX. I-70

Ⓖ STA 155+99.35, ℄ GRANT AVE. =
STA 768+11.54, ℄ I-70

C122

P.I.= Sta. 967+11.05
Δ = 3° 12' 40" (LT)
Dc = 1° 00' 00"
R = 5,729.58'
T = 160.60'
L = 321.11'
E = 2.25'
PC = 965+50.45
PT = 968+71.56
V (des) = 50 MPH
e (max) = 0.020
WIDENING = N/A

C2

P.I. STA. 769+79.64
Δ = 2° 00' 00" (LT)
Dc = 0° 28' 00"
R = 12,277.67'
T = 214.31'
L = 428.57'
E = 1.87'
PC = 767+65.33
PT = 771+93.90
V (des) = 60 MPH
e (max) = NC
WIDENING = N/A

C8

P.I. STA. 867+07.06
Δ = 1° 38' 17" (LT)
Dc = 0° 30' 00"
R = 11,459.16'
T = 163.82'
L = 327.61'
E = 1.17'
PC = 865+43.25
PT = 868+70.86
V (des) = 50 MPH
e (max) = NC
WIDENING = N/A

HORIZONTAL
SCALE IN FEET
0 10 20 40

CALCULATED | CHECKED

PLAN - I-70 EASTBOUND
STA. 766+00 TO STA. 771+00

FRA-70-14.54

616
2317

ms consultants, inc.

PLOT.CEL

ms consultants, inc.
msconsultants.com

www.msconsultants.com
Ohio DOT Workspace
70\71 East Interchange 2E

1" 0.5" 0

PDF: ohdot\V8i
PCF: 60-06634_2E_Columbus

34" x 22"

Batchplot Spec: \\msconsultants.com\files\production\Q3\60\06634_2E\standards\plotdr\batchplt.spc
Pen Table: N:\03\60\06634_2E\standards\tables\V8i_ms_std_06634_2D_Plan View.tbl
Plot Driver: \\msconsultants.com\files\Standards\ustn\ohdot\v8i\ms\plotting\PDF.pltcfg

Model: Sheet
Printed: 6/19/2018 @ 8:37:27 AM
File: N:\03\60\06634_2E\roadway\sheets\05322G0013.dgn
View: FENCE_VIEW1
By: jdouglas

REF. NO.	SHEET NO.	STATION FROM	STATION TO	SIDE	202 PAVEMENT REMOVED (SQ YD)	202 CONCRETE BARRIER REMOVED (FT)	202 CURB REMOVED (FT)	202 PIPE REMOVED, 24" AND UNDER (FT)	202 GUARDRAIL REMOVED (FT)	202 CATCH BASIN REMOVED (EACH)	202 INLET REMOVED (EACH)	202 STRUCTURE REMOVED (LUMP)	202 MANHOLE REMOVED (EACH)	202 STRUCTURE REMOVED (LUMP)	512 SEALING OF CONCRETE SURFACES (SQ YD)
R1	616	966+00.00 (TN1)	867+71.75 (N1)	LT			172								
R2	616	966+00.00 (TN1)	867+76.80 (N1)	LT					177						
R3	616	774+20.18 (N4)	775+15.16 (N4)	RT		95									
R4	616	865+98.41 (T70EB)	771+00.00 (I70)	RT		501									
R5	616	865+98.41 (T70EB)	771+00.00 (I70)	R/L	863										
R6	616	775+14.70 (N4)	777+50.00 (N4)	RT			256								
R7	616	865+98.41 (T70EB)	777+50.00 (N4)	R/L	2765										
R8	616	767+84.47 (I70)	768+39.45 (I70)	RT								1			
R9	616	867+85.24 (N1)	868+50.45 (N1)	LT										1	
R10	616	773+70.92 (N4)	773+80.58 (N4)	L/R				77			2		1		
R11	616	776+25.02 (N4)	776+30.74 (N4)	L/R				107		1	1				
R12	616	867+85.24 (N1)	868+72.17 (N1)	LT		90									
S1	616	865+98.41 (T70EB)	866+98.25 (T70EB)	LT											142
S2	616	769+03.60 (I70)	771+00.00 (I70)	CL											257
S3	616	775+13.88 (N4)	777+50.00 (N4)	RT											267
S4	616	866+99.12 (N1)	871+00.00 (N1)	RT											361
S5	616	966+00.00 (TN1)	966+99.92 (TN1)	RT											91
TOTALS CARRIED TO SUB-SUMMARY					3628	686	428	184	177	1	3	1	1	1	1118

CALCULATED JAP
CHECKED TAZ

ESTIMATED QUANTITIES

FRA-70-14.54

617
2317

PLOT.CEL

ms consultants, inc.
msconsultants.com

www.msconsultants.com
Ohio DOT Workspace
70\71 East Interchange 2E

1" 0.5" 0

Batchplot Spec: \\msconsultants.com\files\production\Q3\60\06634_2E\standards\plotdrv\batchplt.spc
Pen Table: N:\Q3\60\06634_2E\standards\tables\V8i_ms_std_06634_2D_Plan View_NoClouds.tbl
Plot Driver: \\msconsultants.com\files\production\Q3\60\06634_2E\standards\ustn\ohdot\v8i\ms\plotting\PDF.pltcfg
PDF: ohdotV8i
PDF: 60-06634_2E_Columbus

34" x 22"

Model: Sheet
Printed: 10/24/2018 @ 1:38:54 PM
File: N:\Q3\60\06634_2E\roadway\sheets\105322G013A.dgn
View: FENCE_VIEW1
By: hbrendinger

REF. NO.	SHEET NO.	STATION FROM	STATION TO	SIDE	601 CONCRETE SLOPE PROTECTION SQ YD	606 IMPACT ATTENUATOR, TYPE 1 (UNIDIRECTIONAL) EACH		622 CONCRETE BARRIER, SINGLE SLOPE, TYPE B FT	622 CONCRETE BARRIER, SINGLE SLOPE, TYPE C FT	622 CONCRETE BARRIER, SINGLE SLOPE, TYPE C1 FT	622 CONCRETE BARRIER, SINGLE SLOPE, TYPE D FT				622 CONCRETE BARRIER, END ANCHORAGE, REINFORCED, TYPE C EACH	622 CONCRETE BARRIER, END ANCHORAGE, REINFORCED, TYPE C1 EACH	622 CONCRETE BARRIER, END ANCHORAGE, REINFORCED, TYPE D EACH	626 BARRIER REFLECTOR, TYPE 1, BI-DIRECTIONAL EACH	622 CONCRETE BARRIER, END ANCHORAGE, REINFORCED, TYPE B EACH	670 DITCH EROSION PROTECTION MAT, TYPE B SQ YD					
G1	616	774+86.97 (N4)	775+13.88 (N4)	RT		1																		
B1	616	866+35.00 (T70EB)	866+80.77 (T70EB)	LT						16						2		1						
B2	616	866+88.77 (T70EB)	866+98.25 (T70EB)	LT												1		1						
B3	616	865+98.41 (T70EB)	866+15.00 (T70EB)	LT						2						1								
B8	616	769+03.60 (I70)	769+40.00 (I70)	CL						7						2		1						
B9	616	769+60.00 (I70)	770+00.03 (I70)	CL						10						2								
B10	616	770+10.03 (I70)	771+00.00 (I70)	CL						75						1		2						
B11	616	966+00.00 (TN1)	966+47.70 (TN1)	RT				33											1					
B12	616	867+19.11 (N1)	868+98.32 (N1)	RT							149						2	3						
B13	616	869+18.31 (N1)	871+00.00 (N1)	RT							167						1	3						
B14	616	775+13.88 (N4)	775+46.68 (N4)	RT											2									
B15	616	775+66.68 (N4)	777+50.00 (N4)	RT					168						1			4						
B16	616	966+67.68 (TN1)	966+99.92 (TN1)	RT						2								1	2					
E2	616	865+98.34 (TN1)	866+28.64 (TN1)	LT																25				
E3	616	866+42.67 (TN1)	866+74.90 (TN1)	LT																27				
E6	616	966+00.00 (TN1)	966+99.92 (TN1)	RT	41																			
TOTALS CARRIED TO SUB-SUMMARY					41	1		33	168	112	316	0	0	0	3	9	3	16	3	52				

CALCULATED JAP
CHECKED TAZ

ESTIMATED QUANTITIES

FRA-70-14.54

618
2317

ms consultants, inc.

PLOT.CEL

ms consultants, inc.
msconsultants.com

www.msconsultants.com
Ohio DOT Workspace
70\71 East Interchange 2E

1" 0.5" 0

OPF: ohdot\V8i
PCF: 60-06634_2E_Columbus

34" x 22"

Model: Sheet
Printed: 6/19/2018 @ 8:37:54 AM
File: N:\03\60\06634_2E\roadway\sheets\1053226003B.dgn
View: FENCE_VIEW1
By: jdouglas

Batchplot Spec: \\msconsultants.com\files\production\03\60\06634_2E\standards\plotdrv\batchplt.spc
Pen Table: N:\03\60\06634_2E\standards\tables\V8i_ms_std_06634_2D_Plan_View.tbl
Plot Driver: \\msconsultants.com\files\Standards\ustn\ohdot\v8i\ms\plotting\PDF.pltcfg

REF. NO.	SHEET NO.	STATION FROM	STATION TO	SIDE	518 6" NON-PERFORATED CORRUGATED PLASTIC PIPE, INCLUDING SPECIALS	611 6" CONDUIT, TYPE B	611 15" CONDUIT, TYPE B	611 18" CONDUIT, TYPE B	611 24" CONDUIT, TYPE B	611 15" CONDUIT, TYPE C	611 CATCH BASIN, NO. 8	611 INLET, NO. 3 FOR SINGLE SLOPE BARRIER, TYPE B	611 INLET, NO. 3 FOR SINGLE SLOPE BARRIER, TYPE C	611 INLET, NO. 3 FOR SINGLE SLOPE BARRIER, TYPE D	611 MANHOLE, NO. 3, AS PER PLAN	611 INLET, NO. 3 FOR SINGLE SLOPE BARRIER, TYPE C1, AS PER PLAN "B"	839 TRENCH DRAIN WITH STANDARD GRATE
		RAMP N1 - (N1) I-70 - (I70) TRANSITIONAL RAMP N1 - (TN1) TRANSITIONAL I-70 EB - (T70EB)			FT	FT	FT	FT	FT	FT	EACH	EACH	EACH	EACH	EACH	EACH	FT
D1	616	966+57.69 (TN1)	966+35.82 (TN1)	L/R			39					1					
D2	616	966+35.82 (TN1)	967+13.11 (TN1)	LT				77			1						
D3	616	867+09.12 (N1)	867+12.78 (N1)	L/R			35							1			
D4	616	867+12.78 (N1)	767+13.17 (I70)	L/R					74						1		
D5	616	866+25.00 (T70EB)	866+25.00 (T70EB)	LT						17						1	
D6	616	869+13.65 (N1)	867+12.78 (N1)	LT				201					1				
D7	616	869+03.46 (N1)	867+12.78 (N1)	LT		24											166
D8	616	869+00.00 (N1)	869+13.65 (N1)	L/R	14		32							1			
D9	616, 620	871+49.73 (N1)	869+13.65 (N1)	LT			238						1				
TOTALS CARRIED TO SUB-SUMMARY					14	24	344	278	74	17	1	1	2	2	1	1	166

CALCULATED JAP
CHECKED TAZ

ESTIMATED QUANTITIES

FRA-70-14.54

ms consultants, inc.

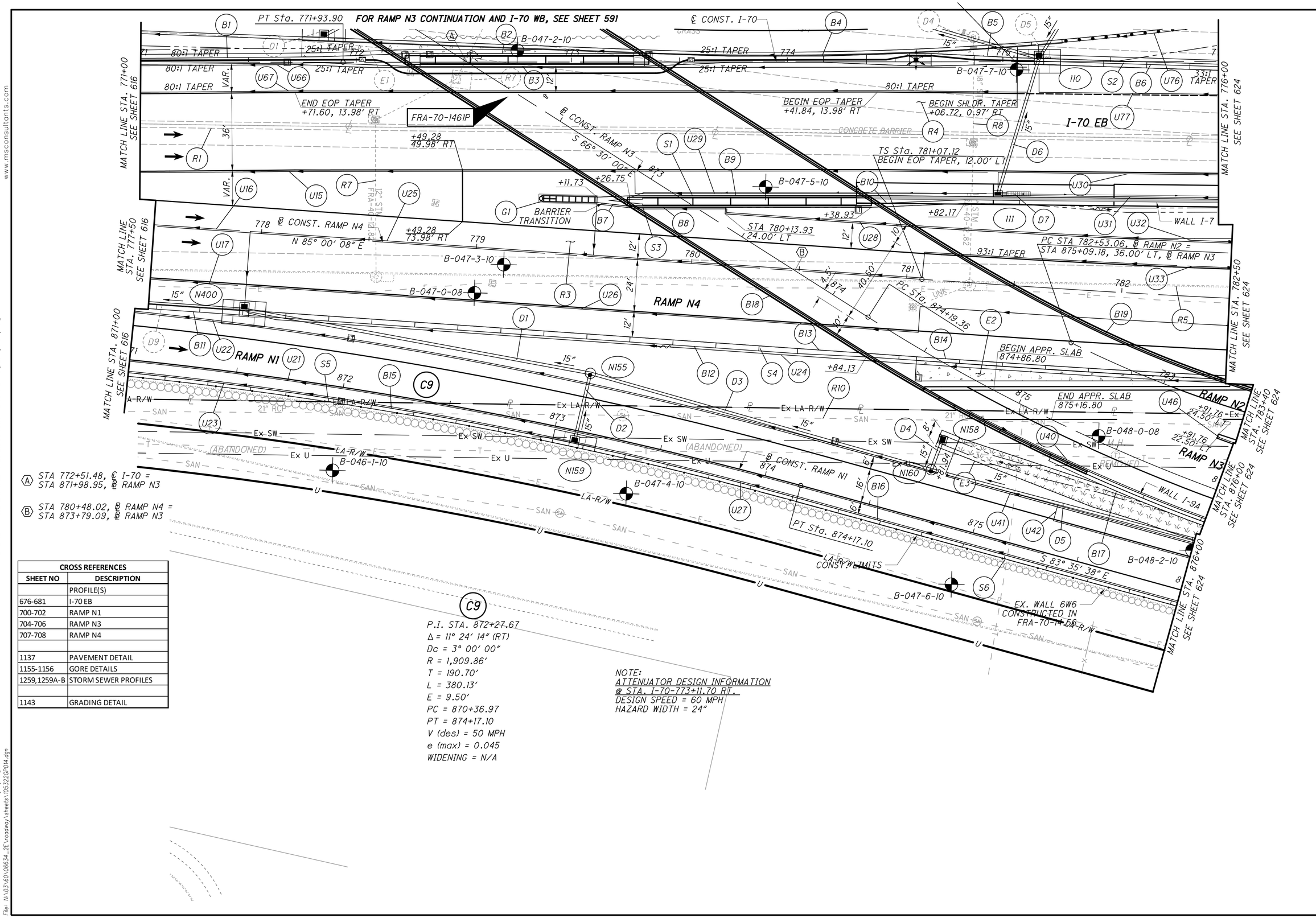

CROSS REFERENCES	
SHEET NO	DESCRIPTION
	PROFILE(S)
676-681	I-70 EB
700-702	RAMP N1
704-706	RAMP N3
707-708	RAMP N4
1137	PAVEMENT DETAIL
1155-1156	GORE DETAILS
1259,1259A-B	STORM SEWER PROFILES
1143	GRADING DETAIL

PLOT.CEL

ms consultants, inc.
msconsultants.com

Ohio DOT Workspace
70\71 East Interchange 2E
www.msconsultants.com

Batchplot Spec: \\msconsultants.com\files\production\03\60\06634_2E\standards\plotdrv\batchplt.spc
Pen Table: N:\03\60\06634_2E\standards\tables\V8i_ms_std_06634_2D_Plan View.tbl
Plot Driver: \\msconsultants.com\files\Standards\ustn\ohdot\v8i\ms\plotting\PDF.pltcfg

34" x 22"

Model: Sheet
Printed: 6/19/2018 @ 8:38:23 AM
File: N:\03\60\06634_2E\roadway\sheets\105322GP014.dgn
View: FENCE_VIEW1
By: jdouglas

HORIZONTAL SCALE IN FEET
0 10 20 40

CALCULATED
CHECKED

PLAN - I-70 EASTBOUND
STA. 771+00 TO STA. 776+00

FRA-70-14.54

ms consultants, inc.

PLOT.CEL

ms consultants, inc.
msconsultants.com

Ohio DOT Workspace
70\71 East Interchange 2E
www.msconsultants.com

Batchplot Spec: \\msconsultants.com\files\production\03\60\06634_2E\standards\plotdrv\batchplt.spc
Pen Table: N:\03\60\06634_2E\standards\tables\V8i_ms_std_06634_2D_Plan View_NoClouds.tbl
Plot Driver: \\msconsultants.com\files\Standards\ustn\ohdot\v8i\ms\plotting\PDF.pltcfg

34" x 22"

View: FENCE_VIEW1
By: hbrendlinger
Model: Sheet
Printed: 10/24/2018 @ 1:39:06 PM
File: N:\03\60\06634_2E\roadway\sheets\105322G0014.dgn

REF. NO.	SHEET NO.	STATION FROM	STATION TO	SIDE	202 PAVEMENT REMOVED SY	202 CONCRETE BARRIER REMOVED FT	202 CURB REMOVED FT	202 PIPE REMOVED, 24" AND UNDER FT	202 MANHOLE REMOVED EACH	202 CATCH BASIN REMOVED EACH	202 INLET REMOVED EACH	512 SEALING OF CONCRETE SURFACES SY	606 IMPACT ATTENUATOR, TYPE 1 (UNIDIRECTIONAL) EACH	626 BARRIER REFLECTOR, TYPE 1 BI-DIRECTIONAL EACH
R1	620	771+00.00 (I70)	776+00.00 (I70)	RT		500								
R3	620	777+42.57 (N4)	782+50.00 (N4)	R/L	2765									
R4	620	771+00.00 (I70)	776+00.00 (I70)	RT	1324									
R5	620	777+50.00 (N4)	782+50.00 (N4)	R/L			501							
R7	620	778+54.41 (N4)	778+83.82 (N4)	L/R				115			2			
R8	620	781+03.76 (N4)	781+24.00 (N4)	L/R				144		1	2			
R10	620	871+00.00 (N1)	783+40.00 (N2)	RT				518	1					
G1	620	772+84.79 (I70)	773+11.70 (I70)	RT									1	1
S1	620	773+11.70 (I70)	774+31.98 (I70)	RT								108		
S2	620	771+00.00 (I70)	776+00.00 (I70)	CL								909		
S3	620	779+75.49 (N4)	781+29.81 (N4)	LT								176		
S4	620	777+50.00 (N4)	782+50.00 (N4)	RT								532		
S5	620	871+00.00 (N1)	876+00.00 (N1)	RT								447		
S6	620	875+25.17 (N1)	876+02.04 (N1)	LT								70		
TOTALS CARRIED TO SUB-SUMMARY					4089	500	501	777	1	1	4	2242	1	1

CALCULATED JAP
CHECKED TAZ

ESTIMATED QUANTITIES

FRA-70-14.54

621
2317

ms consultants, inc.

PLOT.CEL
ms consultants, inc.
msconsultants.com
www.msconsultants.com
Ohio DOT Workspace
70\71 East Interchange 2E
0 0.5" 1"
Batchplot Spec: \\msconsultants.com\files\production\Q3\60\06634_2E\standards\plotdrv\batchplt.spc
Pen Table: N:\03\60\06634_2E\standards\tables\V8i_ms_std_06634_2D_Plan View_NoClouds.tbl
Plot Driver: \\msconsultants.com\files\Standards\ustn\ohdot\v8i\ms\plotting\PDF.pltcfg
Model: Sheet
Printed: 10/24/2018 @ 1:39:18 PM
File: N:\03\60\06634_2E\roadway\sheets\05322G01FA.dgn
View: FENCE_VIEW1
By: hbrendinger
34" x 22"

REF. NO.	SHEET NO.	STATION FROM	STATION TO	SIDE		601 CONCRETE SLOPE PROTECTION SQ YD	670 DITCH EROSION PROTECTION MAT, TYPE B SQ YD		622 CONCRETE BARRIER, SINGLE SLOPE, TYPE B1 FT	622 CONCRETE BARRIER, SINGLE SLOPE, TYPE C FT	622 CONCRETE BARRIER, SINGLE SLOPE, TYPE C, AS PER PLAN "A" FT	622 CONCRETE BARRIER, SINGLE SLOPE, TYPE C1 FT	622 CONCRETE BARRIER, SINGLE SLOPE, TYPE D FT	622 CONCRETE BARRIER, SINGLE SLOPE, TYPE D, AS PER PLAN "A" FT	622 CONCRETE BARRIER, SINGLE SLOPE, TYPE D, AS PER PLAN "B" FT	622 CONCRETE BARRIER, SINGLE SLOPE, TYPE D, AS PER PLAN "C" FT	622 BARRIER TRANSITION EACH	622 CONCRETE BARRIER, END ANCHORAGE, REINFORCED, TYPE B1 EACH	622 CONCRETE BARRIER, END ANCHORAGE, REINFORCED, TYPE C EACH	622 CONCRETE BARRIER, END ANCHORAGE, REINFORCED, TYPE C1 EACH	622 CONCRETE BARRIER, END ANCHORAGE, REINFORCED, TYPE D EACH	626 BARRIER REFLECTOR, TYPE 1, BI-DIRECTIONAL EACH	626 BARRIER REFLECTOR, TYPE 1, ONE-WAY EACH		
		RAMP N1 - (N1) RAMP N3 - (N3) RAMP N4 - (N4) I-70 - (I70)																							
E2	620	781+07.19 (N4)	782+50.00 (N4)	RT		77																			
E3	620	874+81.94 (N1)	876+00.00 (N1)	LT			122																		
B1	620	771+00.00 (I70)	772+29.63 (I70)	LT								115									2				
B2	620	772+29.63 (I70)	773+28.79 (I70)	LT											99						1		2		
B3	620	772+29.63 (I70)	773+28.79 (I70)	RT										99									1		
B4	620	773+28.79 (I70)	774+56.73 (I70)	LT					98										2				4		
B5	620	774+66.72 (I70)	775+06.77 (I70)	CL					10										2						
B6	620	775+26.77 (I70)	776+00.00 (I70)	CL					58										1				2		
B7	620	773+11.70 (I70)	773+32.81 (I70)	RT													1								
B8	620	779+75.49 (N4)	780+74.41 (N4)	LT												99							2		
B9	620	773+32.81 (I70)	774+31.98 (I70)	RT												99								3	
B10	620	780+74.41 (N4)	781+29.81 (N4)	LT									26									2			
B11	620	777+50.00 (N4)	777+84.41 (N4)	RT						19										1			4		
B12	620	778+04.41 (N4)	780+51.87 (N4)	RT						217										2					
B13	620	780+51.87 (N4)	780+84.13 (N4)	RT							32														
B14	620	780+84.13 (N4)	782+50.00 (N4)	RT									152									1	2		
B15	620	871+00.00 (N1)	873+00.05 (N1)	RT									184									1	2		
B16	620	873+20.13 (N1)	876+00.00 (N1)	RT									265									1	3		
B17	620	875+25.17 (N1)	876+02.04 (N1)	LT									63									1			
B18	620	871+85.07 (N3)	876+00.00 (N3)	RT																			6		
B19	620	872+80.25 (N3)	875+99.23 (N3)	LT																			6		
TOTALS CARRIED TO SUB-SUMMARY						77	122		166	236	32	115	690	99	99	198	1	5	3	1	6	35	3		

CALCULATED JAP
CHECKED TAZ

ESTIMATED QUANTITIES

FRA-70-14.54

622
2317

ms consultants, inc.

PLOT.CEL

ms consultants, inc.
msconsultants.com

www.msconsultants.com
Ohio DOT Workspace
70\71 East Interchange 2E

1" 0.5" 0

Batchplot Spec: \\msconsultants.com\files\production\Q3\60\06634_2E\standards\plotdrv\batchplt.spc
Pen Table: N:\Q3\60\06634_2E\standards\tables\V8i_ms_std_06634_2D_Plan View_NoClouds.tbl
Plot Driver: \\msconsultants.com\files\Standards\ustn\ohdot\v8i\ms\plotting\PDF.pltcfg

Model: Sheet
Printed: 2/12/2019 @ 2:27:01 PM
File: N:\Q3\60\06634_2E\roadway\sheets\1053220014B.dgn

View: FENCE_VIEW1
By: hbreidinger

34" x 22"

REF. NO.	SHEET NO.	STATION FROM	STATION TO	SIDE	611 12" CONDUIT, TYPE B, AS PER PLAN (FT)	611 15" CONDUIT, TYPE B (FT)	611 15" CONDUIT, TYPE C (FT)		611 CATCH BASIN, NO. 6 (EACH)	611 CATCH BASIN, NO. 8 (EACH)	611 INLET, NO. 3 FOR SINGLE SLOPE BARRIER, TYPE D (EACH)	611 MANHOLE, NO. 3 (EACH)		839 TRENCH DRAIN WITH STANDARD GRATE, A.P.P. (FT)
		RAMP N1 - (N1) INTERSTATE 70 - (I70)												
D1	620	873+10.68 (N1)	871+49.73 (N1)				163					1		
D2	620	873+10.09 (N1)	873+10.68 (N1)			32					1			
D3	620	874+73.57 (N1)	873+10.68 (N1)				164					1		
D4	620	874+74.95 (N1)	874+73.57 (N1)				15			1				
D5	620, 624	876+50.03 (N1)	874+73.57 (N1)				176					1		
D6	620	774+97.62 (I70)	775+16.77 (I70)			66			1					
D7	620	775+10.63 (I70)	774+99.63 (I70)		4									11
TOTALS CARRIED TO SUB-SUMMARY					4	98	518		1	1	1	3		11

CALCULATED JAP
CHECKED TAZ

ESTIMATED QUANTITIES

FRA-70-14.54

623
2317

PLOT.CEL
ms consultants, inc.
msconsultants.com
Ohio DOT Workspace
70\71 East Interchange 2E
www.msconsultants.com
0 0.5" 1"
DGN: ohdot\8i
PCF: 60-06634_2E_Columbus
Batchplot Spec: \\msconsultants.com\files\production\03\60\06634_2E\standards\plotdir\batchplt.586
Pen Table: N:\03\60\06634_2E\standards\tables\V8i_ms_std_06634_2D_Plan View.tbl
Plot Driver: \\msconsultants.com\files\Standards\astm\ohdot\v8i\ms\plotting\PDF.pltcfg
Model: Sheet View: SHEET
Printed: 6/19/2018 @ 8:39:20 AM By: jdouglas
File: N:\03\60\06634_2E\roadway\sheets\105322GP016.dgn

FOR I-70 WB, SEE SHEET 594

MATCH LINE STA. 776+00 SEE SHEET 620

MATCH LINE STA. 782+50 SEE SHEET 620

MATCH LINE STA. 783+40 SEE SHEET 620

MATCH LINE STA. 876+00 SEE SHEET 620

MATCH LINE STA. 787+66 SEE SHEET 628

MATCH LINE STA. 788+75 SEE SHEET 628

MATCH LINE STA. 881+22 SEE SHEET 628

MATCH LINE STA. 881+50 SEE SHEET 628

I-70 EB

℄ CONST. I-70

N 81° 00′ 00″ E

END EOP TAPER +13.79, 16.00′ RT

33:1 TAPER

FUTURE EOP LANE LINE
CURRENT SHLDR. BREAK

+45.32

B-048-1-10
WALL I-7

+50.79

B-049-5-10

B-050-0-08

B4

ASPHALT

CONCRETE BARRIER

54" RCP

OVERHEAD SIGN

LON +55.24

93:1 TAPER

℄ CONST. RAMP N4

SC Sta. 784+57.12

RAMP N4

FRA-70-1476

B-049-6-10

BEGIN SHLDR TAPER
STA 785+20.64, 10.00′ LT

END SHLDR TAPER
STA 786+95.64, 3.00′ LT

+72.00

+20.6

WALL I-8A

LON +81.19

PROP. BULKHEAD

WV PER SUE LEVEL D

TREES TBR

PCC Sta. 785+61.29

25:1 TAPER

℄ CONST. RAMP N2

B-049-1-10

B-049-4-10

STA 785+24.26
22.00′ RT

STA 785+22.69
31.77′ RT

TRACK & FIELD
TBR

RAMP N3

WALL I-94-1

+29.15

℄ CONST. RAMP N3

END EOP TAPER
+97.52, 3.00′ RT

B-048-2-10

EX. WALL 6W6
CONSTRUCTED
IN FRA-70-14.56

PC Sta. 876+82.16

RUBBERIZED RUNNING TRACK MATERIAL

JACKING PIT

CONC. PAD

SAND TBR

PRE TIE TBR

CHAIN LINK FENCE

SCORE BOARD TBR

RAMP N1

℄ CONST. RAMP N1

B-141-1-10

B-141-0-09

B-049-2-10

+04.95

CONST. LIMITS

ASPHALT PARKING LOT

BEGIN EOP TAPER
880+54.66
3.00′ RT

55:1 TAPER

8" V.Z.03.005 SUE LEVEL B ABANDONED IN FRA-70-14.56

12" RCP

21" RCP

54" RCP

(ABANDONED)

5' CHAIN

2-6" TILE

WV PER SUE LEVEL D

SAN

STM

Ex LA-R/W

Ex SW

Ex U

LA-R/W

U

T

W

E

G

OHW

CROSS REFERENCES	
SHEET NO	DESCRIPTION
	PROFILE(S)
676-681	I-70 EB
700-702	RAMP N1
703	RAMP N2
704-706	RAMP N3
707-708	RAMP N4
1137-1138	PAVEMENT DETAIL
1157	GORE DETAILS
1257F, 1259C-D	STORM SEWER PROFILES
1143	GRADING DETAIL

C10
P.I. STA. 879+23.61
Δ = 30° 38′ 14″ (LT)
Dc = 6° 30′ 00″
R = 881.47′
T = 241.45′
L = 471.34′
E = 32.47′
PC = 876+82.16
PT = 881+53.50
V (des) = 45 MPH
e (max) = 0.057
WIDENING = N/A

C12
P.I. STA. 784+11.62
Δ = 33° 08′ 08″ (LT)
Dc = 10° 45′ 00″
R = 532.98′
T = 158.56′
L = 308.24′
E = 23.09′
PC = 782+53.06
PCC = 785+61.29
V (des) = 40 MPH
e (max) = 0.060
WIDENING = N/A

C13
P.I. STA. 787+34.15
Δ = 18° 50′ 34″ (LT)
Dc = 5° 30′ 00″
R = 1,041.74′
T = 172.86′
L = 342.60′
E = 14.24′
PCC = 785+61.29
PCC = 789+03.89
V (des) = 45 MPH
e (max) = 0.053
WIDENING = N/A

C17
P.I. STA. 877+94.90
Δ = 47° 43′ 52″ (LT)
Dc = 6° 45′ 00″
R = 848.83′
T = 375.54′
L = 707.13′
E = 79.36′
PC = 874+19.36
PT = 881+26.49
V (des) = 40 MPH
e (max) = 0.052
WIDENING = 3′

N

0 10 20 40 HORIZONTAL SCALE IN FEET

CALCULATED CHECKED

PLAN - I-70 EASTBOUND
STA. 776+00 TO STA. 781+00

FRA-70-14.54

624
2317

ms consultants, inc.

PLOT.CEL

ms consultants, inc.
msconsultants.com

Ohio DOT Workspace
70\71 East Interchange 2E
www.msconsultants.com

1" 0.5" 0

Batchplot Spec: \\msconsultants.com\Files\production\03\60\06634_2E\standards\plotdrv\batchplt.spc
Pen Table: N:\03\60\06634_2E\standards\tables\V8i_ms_std_06634_2D_Plan_View_NoClouds.tbl
Plot Driver: \\msconsultants.com\Files\Standards\ustn\ohdot\v8i\ms\plotting\PDF.prtcfg
PDF: ohdotV8i
PDF: 60-06634_2E_Columbus

34" x 22"

View: FENCE_VIEW1
By: hlorendinger
Model: Sheet
Printed: 10/24/2018 @ 1:39:31 PM
File: N:\03\60\06634_2E\roadway\sheets\1053220015.dgn

REF. NO.	SHEET NO.	STATION FROM	STATION TO	SIDE	202 PAVEMENT REMOVED	202 WALK REMOVED	202 CONCRETE BARRIER REMOVED	202 CURB REMOVED	202 PIPE REMOVED, 24" AND UNDER	SPECIAL FILL AND PLUG EXISTING CONDUIT	202 GUARDRAIL REMOVED	202 MANHOLE REMOVED	202 INLET REMOVED	202 FENCE REMOVED	202 REMOVAL MISC.: PRIVATE SIGN REMOVED	202 REMOVAL MISC.: GOAL POST REMOVED	202 REMOVAL MISC.: RAILROAD TIES REMOVED	202 REMOVAL MISC.: RUNNING TRACK REMOVED	512 SEALING OF CONCRETE SURFACES	606 GUARDRAIL, TYPE MGS	606 ANCHOR ASSEMBLY, MGS TYPE E (MASH 2016)	606 MGS BRIDGE TERMINAL ASSEMBLY, TYPE 1	202 REMOVAL MISC.: PRIVATE LIGHT POLES AND FOUNDATIONS	626 BARRIER REFLECTOR, TYPE 2, BI-DIRECTIONAL	202 DISCONNECT EXISTING CIRCUIT, AS PER PLAN
RAMP N1 - (N1) RAMP N2 - (N2) RAMP N3 - (N3) RAMP N4 - (N4) I-70 - (I70)					SQ YD	SQ FT	FT	FT	FT	FT	FT	EACH	EACH	FT	EACH	EACH	FT	SQ YD	SQ YD	FT	EACH	EACH	EACH	EACH	EACH
R1	624	782+72.50 (N4)	784+62.15 (N4)	L/R							190														
R2	624	782+50.00 (N4)	787+70.12 (N4)	L/R				543																	
R4	624	776+00.00 (I70)	780+24.17 (I70)	RT			427																		
R5	624	782+50.00 (N4)	787+66.00 (N4)	LT	2821																				
R6	624	785+84.05 (N4)	787+66.11 (N4)	L/R				196																	
R7	624	879+01.05 (N3)	879+41.97 (N3)	R/L										182											
R8	624	879+04.42 (N3)	881+22.59 (N3)	R/L				352																	
R9	624	785+84.05 (N4)	787+66.00 (N4)	LT				179																	
R10	624	875+99.88 (N3)	881+22.70 (N3)	LT										490											
R11	624	784+15.79 (N4)	784+32.11 (N4)	LT					110				1												
R12	624	783+40.00 (N2)	786+96.13 (N2)	RT					358			1													
R13	624	786+96.13 (N2)	788+16.49 (N2)	RT					137			1													
R14	624	879+26.95 (N1)	786+96.13 (N2)	RT					176			1													
R15	624	877+05.00 (N1)	877+87.00 (N1)	LT														436							
R16	624	876+10.00 (N1)	878+74.00 (N1)	L/R														1518							
R17	624	876+08.00 (N1)	878+06.00 (N1)	RT														114							
R18	624	877+98.00 (N1)	878+06.00 (N1)	LT											1										
R19	624	878+31.00 (N3)	878+.39.00 (N3)	LT		40																			
R20	624	878+39.00 (N3)	879+00.00 (N3)	LT													173								
R21	624	877+50.00 (N1)	879+00.00 (N3)	RT												1									
R22	624	879+51.00 (N3)	879+15.00 (N3)	L/R				81																	
R23	624	879+56.30 (N1)	880+18.60 (N1)	L/R				171																	
R24	624	880+16.70 (N1)	880+75.60 (N1)	RT				74																	
R25	624, 594	777+84.00 (I70)	780+30.00 (I70)	R/L						308		1													
R26	624	879+79.88 (N3)	880+87.93 (N3)	R/L																			4		1
G1	624	783+37.75 (N4)	785+20.79 (N4)	LT																100	1	1		2	
G2	624	786+63.83 (N2)	788+64.94 (N2)	LT																150	1			3	
G3	624	788+11.94 (N2)	788+72.94 (N2)	RT																13	1			1	
S1	624	785+20.79 (N4)	787+66.00 (N4)	LT															215						
S2	624	782+50.00 (N4)	787+66.03 (N4)	RT															475						
S3	624	776+00.00 (I70)	781+00.00 (I70)	RT															623						
S4	624	783+42.47 (N2)	784+39.99 (N2)	LT															86						
S5	624	876+00.00 (N3)	881+21.80 (N3)	RT															548						
S6	624	876+00.00 (N1)	881+50.00 (N1)	RT															505						
TOTALS CARRIED TO SUB-SUMMARY					2821	40	427	1596	781	308	190	4	1	672	1	1	173	2068	2452	263	3	1	4	6	1

CALCULATED JAP
CHECKED TAZ

ESTIMATED QUANTITIES

FRA-70-14.54

625
2317

PLOT.CEL

ms consultants, inc.
msconsultants.com

www.msconsultants.com
Ohio DOT Workspace
70\71 East Interchange 2E

1" 0.5" 0

Batchplot Spec: \\msconsultants.com\files\production\Q3\60\06634_2E\standards\plotdrv\batchplt.spc
Pen Table: N:\Q3\60\06634_2E\standards\tables\V8i_ms_std_06634_2D_Plan View_NoClouds.tbl
Plot Driver: \\msconsultants.com\files\standards\ustn\ohdot\v8i\ms\plotting\PDF.pltcfg
PDF: ohdot\V8i

Model: Sheet
Printed: 10/24/2018 @ 1:39:42 PM
File: N:\Q3\60\06634_2E\roadway\sheets\I0532600I5A.dgn
View: FENCE_VIEW1
By: hbrendinger

34" x 22"

REF. NO.	SHEET NO.	STATION FROM	STATION TO	SIDE		601 CONCRETE SLOPE PROTECTION SQ YD	670 DITCH EROSION PROTECTION MAT, TYPE B SQ YD		607 FENCE, TYPE CL FT	613 LOW STRENGTH MORTAR BACKFILL CU YD	622 CONCRETE BARRIER, SINGLE SLOPE, TYPE B1 FT	622 CONCRETE BARRIER, SINGLE SLOPE, TYPE C FT	622 CONCRETE BARRIER, SINGLE SLOPE, TYPE D FT	622 CONCRETE BARRIER END SECTION, TYPE D EACH		622 CONCRETE BARRIER, END ANCHORAGE, REINFORCED, TYPE C EACH	622 CONCRETE BARRIER, END ANCHORAGE, REINFORCED, TYPE C, AS PER PLAN "C" EACH	622 CONCRETE BARRIER, END ANCHORAGE, REINFORCED, TYPE D EACH	622 CONCRETE BARRIER, END ANCHORAGE, REINFORCED, TYPE D, AS PER PLAN EACH	626 BARRIER REFLECTOR, TYPE 1, BI-DIRECTIONAL EACH					
		RAMP N1 - (N1) RAMP N2 - (N2) RAMP N3 - (N3) RAMP N4 - (N4) I-70 - (I70)																							
E1	624	776+45.32 (I70)	777+95.26 (I70)	RT			125																		
E2	624	778+09.24 (I70)	778+50.79 (I70)	RT			34																		
E3	624	783+20.15 (N4)	786+87.61 (N4)	RT			316																		
E4	624	787+01.13 (N4)	787+66.00 (N4)	RT			53																		
E6	624	787+48.01 (N2)	788+75.00 (N2)	RT			109																		
E7	624	876+00.00 (N3)	876+29.15 (N3)	RT			26																		
E9	624	876+57.00 (N1)	878+04.95 (N1)	RT			125																		
E10	624	782+50.00 (N4)	782+64.71(N4)	RT		1																			
E11	624	785+29.79 (N4)	787+66.00 (N4)	LT		120				52															
F1	624	876+00.00 (N1)	881+50.00 (N1)	RT					533																
B1	624	776+00.00 (I70)	781+00.00 (I70)	RT							505													12	
B3	624	785+20.79 (N4)	785+41.94 (N4)	LT										1				1			1			1	
B4	624	785+62.45 (N4)	787+66.00 (N4)	LT									183					1			2			2	
B5	624	783+42.47 (N2)	784+02.79 (N2)	LT									29					2			2			2	
B6	624	784+23.21 (N2)	784+39.99 (N2)	LT														2			2			1	
B7	624	782+50.00 (N4)	785+42.29 (N4)	RT									284					1			1			3	
B8	624	785+61.71 (N4)	787+66.03 (N4)	RT									196					1			2			2	
B9	624	876+76.62 (N3)	876+95.31 (N3)	RT														2			1			1	
B10	624	876+00.00 (N3)	876+72.21 (N3)	RT									59							2	1				
B12	624	877+04.21 (N3)	877+18.93 (N3)	RT																1					
B13	624	877+18.93 (N3)	878+14.00 (N3)	RT									97								2				
B14	624	878+14.00 (N3)	878+23.00 (N3)	RT													1								
B15	624	878+23.00 (N3)	878+84.39 (N3)	RT								47				1					1				
B16	624	878+92.26 (N3)	879+25.16 (N3)	RT								3				2					1				
B17	624	879+44.84 (N3)	879+95.16 (N3)	RT								21				2					1				
B18	624	880+14.84 (N3)	880+96.84 (N3)	RT								53				2					2				
B19	624	881+04.72 (N3)	881+21.80 (N3)	RT								2				1					1				
B20	624	876+00.00 (N1)	881+50.00 (N1)	RT									554								11				
TOTALS CARRIED TO SUB-SUMMARY						121	789		533	52	505	126	1402	1	0	8	1	10	3	44					

CALCULATED JAP
CHECKED TAZ

ESTIMATED QUANTITIES

FRA-70-14.54

626
2317

PLOT.CEL

ms consultants, inc.
msconsultants.com

REF. NO.	SHEET NO.	STATION FROM	STATION TO	SIDE	15" CONDUIT, TYPE B (611)	15" CONDUIT, TYPE C (611)	18" CONDUIT, TYPE B (611)	18" CONDUIT, TYPE C (611)		60" CONDUIT, TYPE B, 706.02 (611)	CATCH BASIN, NO. 8 (611)	INLET, NO. 3 FOR SINGLE SLOPE BARRIER, TYPE C, AS PER PLAN (611)	INLET, NO. 3 FOR SINGLE SLOPE BARRIER, TYPE D (611)	MANHOLE, NO. 3 (611)	MANHOLE RECONSTRUCTED TO GRADE, AS PER PLAN (611)	MANHOLE, NO. 3, AS PER PLAN (611)	CONDUIT MISC.: CONDUIT INSTALLED BY THE TRENCHLESS METHOD, 60" (611)		COFFERDAMS AND EXCAVATION BRACING, AS PER PLAN (503)
		RAMP N1 - (N1) RAMP N2 - (N2) RAMP N3 - (N3) RAMP N4 - (N4)																	
					FT	FT	FT	FT		FT	EACH	EACH	EACH	EACH	EACH	EACH	FT		LUMP
D1	624	876+55.00 (N1)	876+50.03 (N1)	L/R	41						1								
D2	624	784+13.00 (N2)	878+13.17 (N3)	L/R	179								1						
D3	624, 594	785+85.19 (N2)	777+84.34 (I-70)	L/R										1			255		1
D4	624	879+35.00 (N3)	879+34.92 (N3)	L/R	43							1							
D5	624	880+05.00 (N3)	879+35.00 (N3)	RT	71							1							
D6	624, 628	881+59.24 (N3)	880+05.00 (N3)	RT	156							1							
D7	624, 653	789+00.00 (N2)	788+00.00 (N2)	L/R	112						1								
D8	624	788+00.00 (N2)	787+65.03 (N2)	LT	39						1				1				
D9	624	785+85.19 (N2)	786+49.68 (N2)	L/R			75							1					
D10	624	785+85.19 (N2)	787+65.03 (N2)	RT						185						1			
D11	624	785+51.97 (N4)	785+52.00 (N4)	RT	11											1			
D12	624	785+52.20 (N4)	785+51.97 (N4)	L/R	53								1						
D13	624	784+52.86 (N4)	785+51.97 (N4)	RT	101											1			
D14	624	784+49.92 (N4)	784+52.86 (N4)	L/R	64						1								
D15	624	785+52.00 (N4)	786+49.68 (N2)	L/R				31					1						
D16	624	878+64.84 (N3)	879+34.92 (N3)	LT		68								1					
D17	624	787+65.02 (N2)	787+71.52 (N2)	RT						8									
TOTALS CARRIED TO SUB-SUMMARY					870	68	75	31		193	4	3	3	3	1	3	255		1

CALCULATED JAP
CHECKED TAZ

ESTIMATED QUANTITIES

FRA-70-14.54

ms consultants, inc.

Batchplot Spec: \\msconsultants.com\files\production\03\60\06634_2E\standards\plotdrv\batchplt.spc
Pen Table: \\msconsultants.com\files\Production\03\60\06634_2E\deliverables\2019-02-11 ADDENDUM 02\NO CLOUDS\V8i_ms_std.tbl
Plot Driver: \\msconsultants.com\files\Standards\ustn\ohdot\v8i\ms\plotting\PDF.pltcfg
Ohio DOT Workspace
70\71 East Interchange 2E
PCF: 60-06634_2E_Columbus
www.msconsultants.com
34" x 22"
Model: Sheet
Printed: 2/13/2019 @ 7:41:29 PM
File: \\msconsultants.com\files\Production\03\60\06634_2E\roadway\sheets\105322G0015B.dgn
View: FENCE_VIEW1
By: hbrendlinger

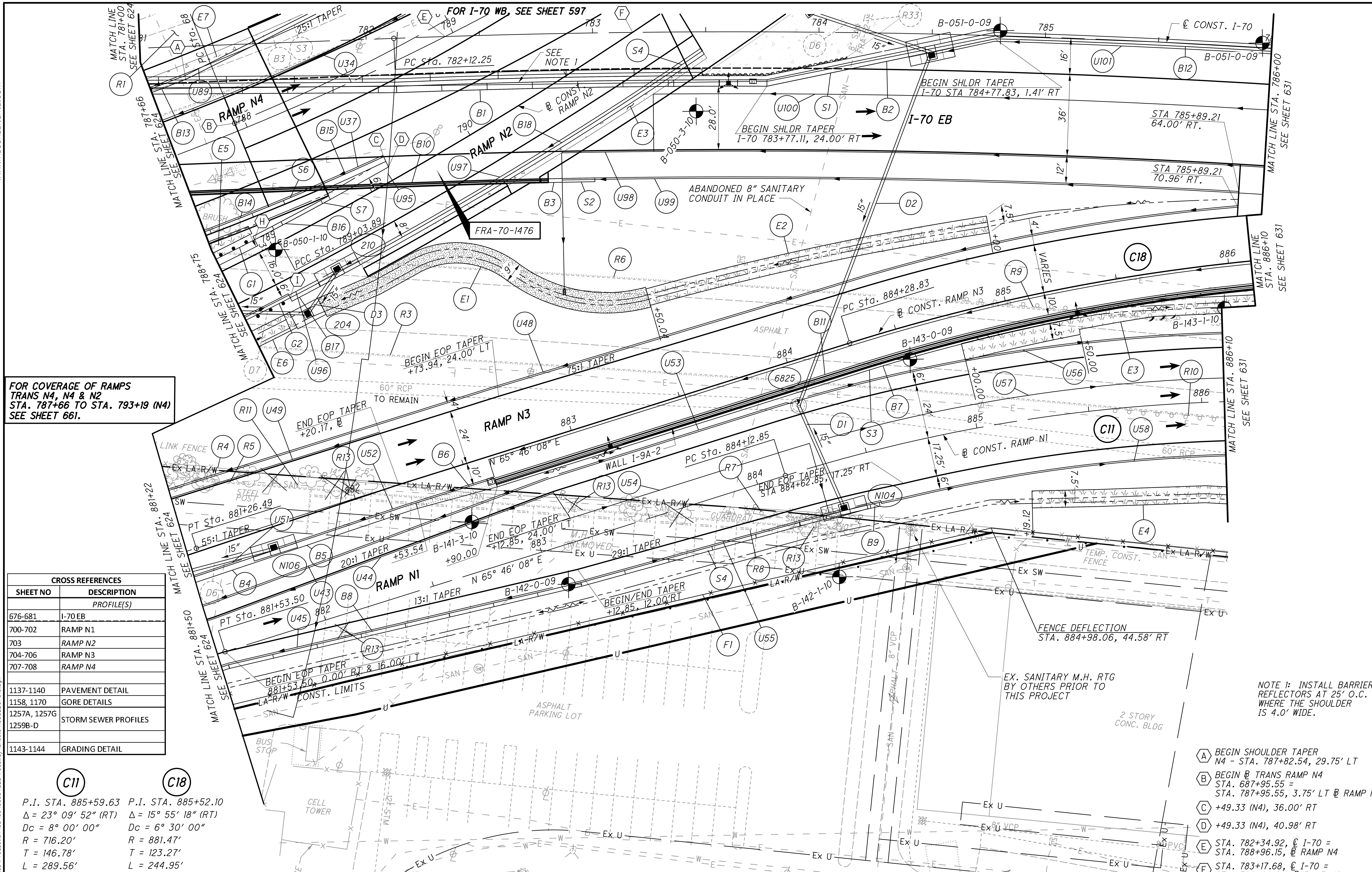

NOTE 1: INSTALL BARRIER REFLECTORS AT 25' O.C. WHERE THE SHOULDER IS 4.0' WIDE.

CROSS REFERENCES	
SHEET NO	DESCRIPTION
	PROFILE(S)
676-681	I-70 EB
700-702	RAMP N1
703	RAMP N2
704-706	RAMP N3
707-708	RAMP N4
1137-1140	PAVEMENT DETAIL
1158, 1170	GORE DETAILS
1257A, 1257G 1259B-D	STORM SEWER PROFILES
1143-1144	GRADING DETAIL

C11	C18
P.I. STA. 885+59.63	P.I. STA. 885+52.10
Δ = 23° 09' 52" (RT)	Δ = 15° 55' 18" (RT)
Dc = 8° 00' 00"	Dc = 6° 30' 00"
R = 716.20'	R = 881.47'
T = 146.78'	T = 123.27'
L = 289.56'	L = 244.95'
E = 14.89'	E = 8.58'
PC = 884+12.85	PC = 884+28.83
PT = 887+02.41	CS = 886+73.78
V (des) = 30 MPH	V (des) = 45 MPH
e (max) = 0.041	e (max) = 0.057
WIDENING = 5.25'	WIDENING = N/A

(A) BEGIN SHOULDER TAPER N4 - STA. 787+82.54, 29.75' LT
(B) BEGIN ℄ TRANS RAMP N4 STA. 687+95.55 = STA. 787+95.55, 3.75' LT ℄ RAMP N4
(C) +49.33 (N4), 36.00' RT
(D) +49.33 (N4), 40.98' RT
(E) STA. 782+34.92, ℄ I-70 = STA. 788+96.15, ℄ RAMP N4
(F) STA. 783+17.68, ℄ I-70 = STA. 790+84.89, ℄ RAMP N2
(G) END SHOULDER TAPER I-70 STA. 782+12.58, 24.00' RT
(H) END 3.0' SHLDR, BEGIN 6.0' SHLDR +94.26 (N2), 6.00' LT
(I) END 6.0' SHLDR, BEGIN 8.0' SHLDR +94.26 (N2), 24.00' RT

HORIZONTAL SCALE IN FEET 0 10 20 40

CALCULATED
CHECKED

PLAN - I-70 EASTBOUND
STA. 781+00 TO STA. 786+00

FRA-70-14.54

628
2317

ms consultants, inc.

PLOT.CEL
ms consultants, inc.
msconsultants.com
www.msconsultants.com

34" x 22"

Model: Sheet View: SHEET
Printed: 1/11/2019 @ 3:24:51 PM By: dhall
File: \\msconsultants.com\files\Production\03\60\06634_2E\roadway\sheets\105322GP016.dgn

Batchplot Spec: \\msconsultants.com\files\production\03\60\06634_2E\standards\plotdrv\batchplt.spc ohdot\V8i
Pen Table: \\msconsultants.com\files\Production\03\60\06634_2E\standards\tables\V8i_ms_ohdot.tbl
Plot Driver: \\msconsultants.com\files\Standards\ustn\ohdot\v8i\ms\plotting\PDF.pltcfg
Ohio DOT Workspace 70\71 East Interchange 2E

PLOT.CEL

ms consultants, inc.
msconsultants.com

www.msconsultants.com
Ohio DOT Workspace
70\71 East Interchange 2E

0 0.5" 1"

Batchplot Spec: \\msconsultants.com\files\Production\03\60\06634_2E\standards\oldot\batchplt.spc
Pen Table: \\msconsultants.com\files\Standards\astm\ohdot\V8\ms\plotting\pen\V8i_ms_std.tbl
Plot Driver: \\msconsultants.com\files\Standards\astm\ohdot\v8i\ms\plotting\PDF.pltcfg
PDF: ohdotV8i
DGN: 60-06634_2E_Columbus

34" x 22"

View: SHEET
By: dhall
Model: Sheet @ 3:09:47 PM
Printed: 1/10/2019
File: \\msconsultants.com\files\Production\03\60\06634_2E\roadway\sheets\10532200016.dgn

CALCULATED JAP
CHECKED TAZ

ESTIMATED QUANTITIES

REF. NO.	SHEET NO.	STATION FROM	STATION TO	SIDE	202 PAVEMENT REMOVED	202 CURB REMOVED	202 PIPE REMOVED, 24" AND UNDER	202 GUARDRAIL REMOVED	202 MANHOLE REMOVED	202 FENCE REMOVED	SPECIAL PARKING BLOCK REMOVED	512 SEALING OF CONCRETE SURFACES	607 FENCE, TYPE CL	622 CONCRETE BARRIER, SINGLE SLOPE, TYPE B1	622 CONCRETE BARRIER, END ANCHORAGE, REINFORCED, TYPE B1	622 CONCRETE BARRIER, SINGLE SLOPE, TYPE C	622 CONCRETE BARRIER, SINGLE SLOPE, TYPE C1	622 CONCRETE BARRIER, SINGLE SLOPE, TYPE D	622 CONCRETE BARRIER, END ANCHORAGE, REINFORCED, TYPE C	622 CONCRETE BARRIER, END ANCHORAGE, REINFORCED, TYPE C, AS PER PLAN "A"	622 CONCRETE BARRIER, END ANCHORAGE, REINFORCED, TYPE D	626 BARRIER REFLECTOR, TYPE 1, BI-DIRECTIONAL	622 CONCRETE BARRIER, END ANCHORAGE, REINFORCED, TYPE C1	622 CONCRETE BARRIER END SECTION, TYPE D	606 MGS BRIDGE TERMINAL ASSEMBLY, TYPE 1	626 BARRIER REFLECTOR, TYPE 2, BI-DIRECTIONAL	626 BARRIER REFLECTOR, TYPE 1, ONE-WAY
		TRANS RAMP N4 (TN4) RAMP N1 - (N1) RAMP N3 - (N3) RAMP N4 - (N4) I-70 - (I70)			SQ YD	FT	FT	FT	EACH	FT	EACH	SQ YD	FT	FT	EACH	FT	FT	FT	EACH	EACH	EACH	EACH	EACH	EACH	EACH	EACH	EACH
R1	628	781+00.00 (I70)	781+90.95 (I70)	R/L	164																						
R3	628	881+79.49 (N3)	885+90.20 (N3)	L/R		428																					
R4	628	881+51.69 (N1)	886+09.48 (N1)	L/R						473																	
R5	628	881+51.14 (N1)	884+36.84 (N1)	L/R		344																					
R6	628	881+72.51 (N3)	885+94.03 (N3)	L/R		447																					
R7	628	883+90.94 (N1)	884+28.72 (N1)	RT				40																			
R8	628	882+11.90 (N1)	884+25.21 (N1)	L/R							26																
R9	628	884+80.26 (N3)	885+94.12 (N3)	L/R				117																			
R10	628	885+59.94 (N1)	886+10.00 (N1)	L/R				50																			
R11	628	881+22.00 (N3)	884+61.16 (N1)	L/R			330		1																		
F1	628	881+50.00 (N1)	886+09.46 (N1)	RT									449														
B1	628	781+00.00 (I70)	783+56.00 (I70)	RT										240	1								12				
B2	628	783+64.05 (I70)	784+39.89 (I70)	RT										47	2								2				
B3	628	782+79.06 (I70)	783+00.00 (I70)	RT																		2					1
B4	628	881+50.00 (N1)	881+77.85 (N1)	LT												13			1								
B5	628	881+97.85 (N1)	882+53.54 (N1)	LT												26			2				1				
B6	628	882+53.54 (N1)	882+90.00 (N1)	LT																	3		1				
B7	628	882+90.00 (N1)	885+49.95 (N1)	LT														238				2					
B8	628	881+50.49 (N1)	884+23.62 (N1)	RT														259				1	3				
B9	628	884+44.29 (N1)	884+49.97 (N1)	RT																		1	1				
B10	628	781+19.51 (I70)	782+79.06 (I70)	RT																			2				2
B11	628	882+61.39 (N3)	886+10.00 (N3)	RT																			3				
B12	628	784+59.42 (I70)	786+00.00 (I70)	CL														126					4	1			
B13	628	787+66.00 (N4)	688+18.05 (TN4)	LT								46						51									
B14	628	787+66.00 (N4)	788+20.86 (N4)	RT														41				1	1				
B15	628	788+20.86 (N4)	788+49.33 (N4)	RT															2				1				
B16	628	788+94.26 (N2)	789+32.31 (N2)	LT														9				1	1		1		
B17	628	788+96.44 (N2)	789+02.16 (N2)	RT																			1		1		
B18	628	789+21.86 (N2)	791+05.71 (N2)	RT														163				2	4				
S1	628	781+00.00 (I70)	786+00.00 (I70)	CL								614															
S2	628	782+79.06 (I70)	783+00.00 (I70)	RT								19															
S3	628	881+50.00 (N1)	885+49.95 (N1)	LT								398															
S4	628	881+50.49 (N1)	884+49.97 (N1)	RT								269															
S6	628	787+66.00 (N4)	788+43.12 (N4)	RT								65															
S7	628	788+94.26 (N2)	789+32.31 (N2)	LT								34															
S8	628	788+96.44 (N2)	792+12.24 (N2)	RT								187															
G1	628	788+64.94 (N2)	788+94.26 (N2)	LT																						1	1
G2	628	788+72.94 (N2)	788+96.44 (N2)	RT																						1	1
TOTALS CARRIED TO SUB-SUMMARY					164	1219	330	207	1	473	26	1632	449	287	3	39	126	761	5	3	10	37	1	2	2	2	3

FRA-70-14.54

629
2317

ms consultants, inc.

PLOT.CEL

ms consultants, inc.
msconsultants.com

www.msconsultants.com
70\71 East Interchange 2E
Ohio DOT Workspace

1" 0.5" 0

PCF: 60-06634_2E_Columbus
OPT: ohdot\V8i

Batchplot Spec: \\msconsultants.com\files\production\03\60\06634_2E\standards\plotdrv\batchplt.spc
Pen Table: N:\03\60\06634_2E\standards\tables\V8i_ms_std_06634_2D_Plan View.tbl
Plot Driver: \\msconsultants.com\files\Standards\ustn\ohdot\v8i\ms\plotting\PDF.pltcfg

Model: Sheet
Printed: 6/19/2018 @ 8:40:34 AM
File: N:\03\60\06634_2E\roadway\sheets\1053220016A.dgn
View: FENCE_VIEW1
By: jdougas

34" x 22"

REF. NO.	SHEET NO.	STATION FROM	STATION TO	SIDE	611 15" CONDUIT, TYPE B (FT)	611 INLET, NO. 3 FOR SINGLE SLOPE BARRIER, TYPE C1, AS PER PLAN (EACH)	611 INLET, NO. 3 FOR SINGLE SLOPE BARRIER, TYPE D (EACH)	611 MANHOLE RECONSTRUCTED TO GRADE, AS PER PLAN (EACH)	202 REMOVAL MISC.: PRIVATE LIGHT POLES AND FOUNDATIONS (EACH)	202 DISCONNECT EXISTING CIRCUIT, AS PER PLAN (EACH)		613 LOW STRENGTH MORTAR BACKFILL (CU YD)	601 CONCRETE SLOPE PROTECTION (SQ YD)			601 TIED CONCRETE BLOCK MAT, TYPE 2 (SQ YD)	670 DITCH EROSION PROTECTION MAT, TYPE B (SQ YD)								
		I-70 - (I70) RAMP N1 - (N1) RAMP N2 - (N2)																							
D1	628	884+61.16 (N1)	884+27.12 (N1)	L/R	50		1	1																	
D2	628	885+08.39 (N1)	784+50.04 (I70)	LT/RT	165	1																			
D3	628	789+20.25 (N2)	789+00.00 (N2)	RT	23		1																		
R13	628	882+06.41 (N1)	884+19.36 (N1)	LT/RT					4	1															
E1	628	882+11.35 (N3)	883+50.04 (N3)	LT													154								
E2	628	883+50.04 (N3)	885+00.00 (N3)	LT														128							
E3	628	885+00.00 (N1)	886+24.10 (N1)	LT														105							
E4	628	885+19.12 (N1)	886+10.00 (N1)	RT														72							
E5	628	788+75.00 (N2)	788+94.42 (N2)	LT														9							
E6	628	788+75.00 (N2)	788+93.22 (N2)	RT														16							
E7	628	787+66.00 (N4)	788+98.56 (N4)	LT									27	27											
E8	628	789+30.60 (N2)	792+13.11 (RT)	RT									41	41											
TOTALS CARRIED TO SUB-SUMMARY					238	1	2	1	4	1		68	68			154	330								

CALCULATED JAP
CHECKED TAZ

ESTIMATED QUANTITIES

FRA-70-14.54

630
2317

PLOT.CEL

ms consultants, inc.
msconsultants.com

Ohio DOT Workspace
70\71 East Interchange 2E
www.msconsultants.com

Batchplot Spec: \\msconsultants.com\files\production\03\60\06634_2E\standards\plotdrv\batchplt.spec
Pen Table: N:\03\60\06634_2E\standards\tables\V8i_ms_std_06634_2D_Plan View_NoClouds.PDF: 60-06634_2E_Columbus
Plot Driver: \\msconsultants.com\files\Standards\ustn\ohdot\v8i\ms\plotting\PDF.pltcfg

34" x 22"

View: FENCE_VIEW1
By: hbrendlinger
Model: Sheet
Printed: 10/24/2018 @ 1:41:14 PM
File: N:\03\60\06634_2E\roadway\sheets\105322GP017.dgn

C3

P.I. STA. 787+78.67
Δ = 16° 30′ 00″ (RT)
Dc = 1° 28′ 00″
R = 3,906.53′
T = 566.42′
L = 1,125.00′
E = 40.85′
PC = 782+12.25
PT = 793+37.25
V (des) = 60 MPH
e (max) = 0.037
WIDENING = N/A

C19

P.I. STA. 887+52.52
Ls = 200.00′
θs = 7° 55′ 00″
LT = 121.56′
ST = 78.74′
x = 199.54′
y = 10.84′
k = 99.94′
p = 1.48′
CS = 886+73.78
SC = 888+73.78

C84

P.I.= Sta. 589+63.13
Δ = 12° 39′ 30″ (RT)
Dc = 17° 02′ 36″
R = 336.18′
T = 37.29′
L = 74.27′
E = 2.06′
PC = 589+25.84
PT = 590+00.12
V (des) = 20 MPH
e (max) = N.C.
WIDENING = N/A

CROSS REFERENCES	
SHEET NO	DESCRIPTION
	PROFILE(S)
676-681	I-70 EB
700-702	RAMP N1
704-706	RAMP N3
724-725	MOOBERRY ST
726-729	PARSONS AVE
733	CHILDRENS DR
1088-1089	INTERSECTION DETAIL
1119-1121, 1125,1131	PAVEMENT JOINT DETAIL
	PAVEMENT DETAIL
1170-1172	GORE DETAILS
1258, 1260D-E, 1260G	STORM SEWER PROFILES
1144	GRADING DETAIL

C85

P.I.= Sta. 590+65.19
Δ = 35° 39′ 37″ (LT)
Dc = 47° 44′ 47″
R = 120.00′
T = 38.60′
L = 74.69′
E = 6.05′
PC =590+26.59
PT = 591+01.28
V (des) = 20 MPH
e (max) = N.C.
WIDENING = N/A

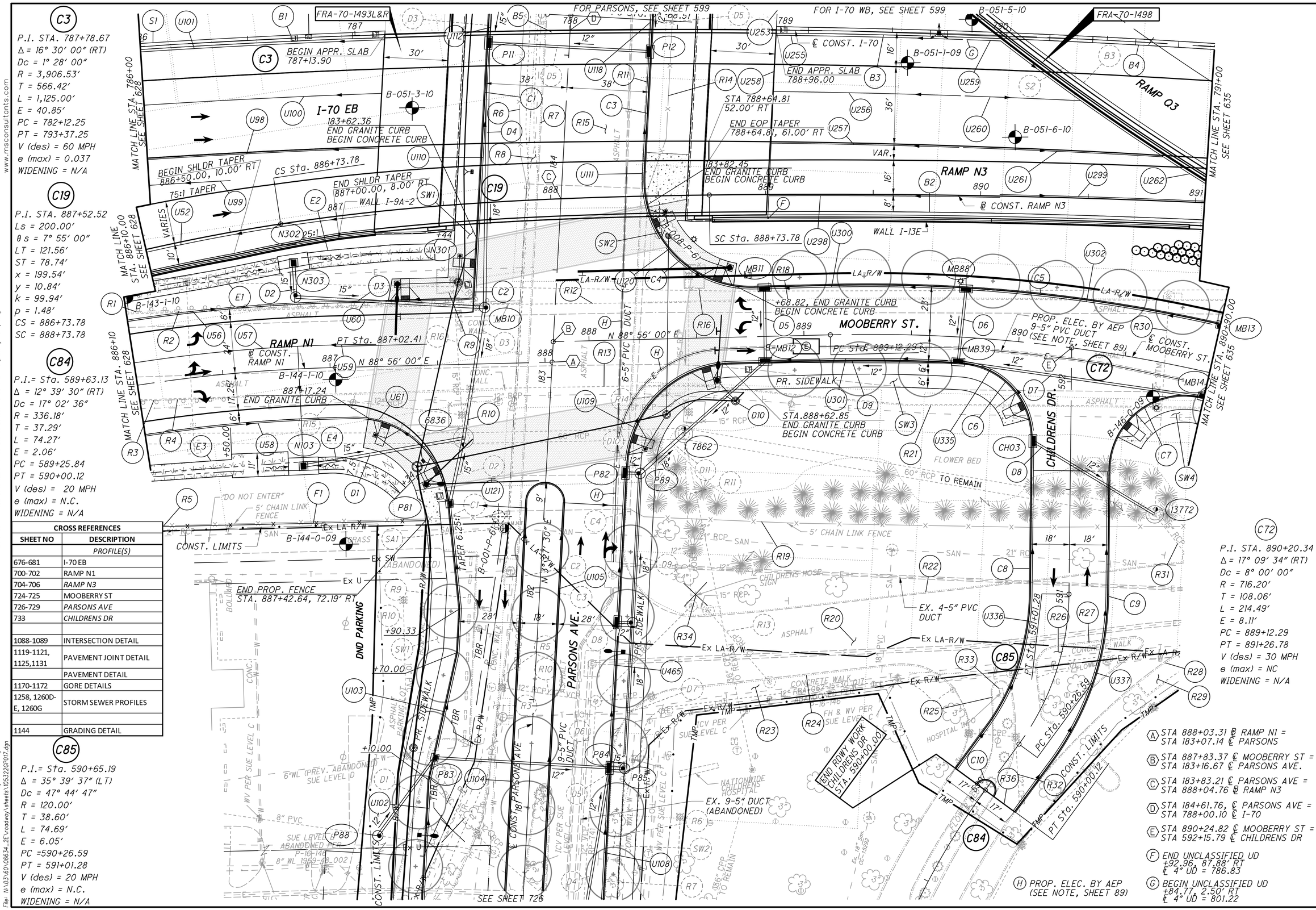

C72

P.I. STA. 890+20.34
Δ = 17° 09′ 34″ (RT)
Dc = 8° 00′ 00″
R = 716.20′
T = 108.06′
L = 214.49′
E = 8.11′
PC = 889+12.29
PT = 891+26.78
V (des) = 30 MPH
e (max) = NC
WIDENING = N/A

(A) STA 888+03.31 ℄ RAMP N1 = STA 183+07.14 ℄ PARSONS
(B) STA 887+83.37 ℄ MOOBERRY ST = STA 183+16.67 ℄ PARSONS AVE.
(C) STA 183+83.21 ℄ PARSONS AVE = STA 888+04.76 ℄ RAMP N3
(D) STA 184+61.76, ℄ PARSONS AVE = STA 788+00.10 ℄ I-70
(E) STA 890+24.82 ℄ MOOBERRY ST = STA 592+15.79 ℄ CHILDRENS DR
(F) END UNCLASSIFIED UD +92.96, 87.88′ RT ℄ 4″ UD = 786.83
(G) BEGIN UNCLASSIFIED UD +84.77, 2.50′ RT ℄ 4″ UD = 801.22
(H) PROP. ELEC. BY AEP (SEE NOTE, SHEET 89)

HORIZONTAL SCALE IN FEET 0 10 20 40

CALCULATED
CHECKED

PLAN - I-70 EASTBOUND
STA. 786+00 TO STA. 791+00

FRA-70-14.54

ms consultants, inc.

PLOT.CEL

ms consultants, inc.
msconsultants.com

Ohio DOT Workspace
70\71 East Interchange 2E
www.msconsultants.com

1" 0.5" 0

Batchplot Spec: \\msconsultants.com\files\production\03\60\06634_2E\standards\plotdrv\batchplt.spc
Pen Table: N:\03\60\06634_2E\standards\tables\V8i_ms_std_06634_2D_Plan View_NoClouds.tbl
Plot Driver: \\msconsultants.com\files\Standards\ustn\ohdot\v8i\ms\plotting\PDF.pltdrv
PDF: ohdot\V8i
MF: 60-06634_2E_Columbus

34" x 22"

View: FENCE_VIEW1
By: hbrendinger

Model: Sheet
Printed: 10/24/2018 @ 1:41:16 PM
File: N:\03\60\06634_2E\roadway\sheets\05322G017.dgn

REF. NO.	SHEET NO.	STATION FROM	STATION TO	SIDE	202 PAVEMENT REMOVED SQ YD	202 CONCRETE BARRIER REMOVED FT	202 WALK REMOVED SQ FT	202 CURB REMOVED FT	202 PIPE REMOVED, 24" AND UNDER FT	202 GUARDRAIL REMOVED FT	202 CATCH BASIN REMOVED EACH	202 INLET REMOVED EACH	202 FENCE REMOVED FT	202 REMOVAL MISC.: PRIVATE SIGNS REMOVED EACH	512 SEALING OF CONCRETE SURFACES SQ YD	607 FENCE, TYPE CL FT		609 CURB, MISC.: COLUMBUS 18" CONCRETE CURB, AS PER PLAN FT	609 CURB, MISC.: STRAIGHT 18" GRANITE CURB, AS PER PLAN "A" FT	622 CONCRETE BARRIER, END ANCHORAGE, REINFORCED, TYPE C1 EACH	622 CONCRETE BARRIER, SINGLE SLOPE, TYPE C1 FT	626 BARRIER REFLECTOR, TYPE 1, BI-DIRECTIONAL EACH	252 FULL DEPTH PAVEMENT SAWING FT	653 TOPSOIL FURNISHED AND PLACED CU YD	622 CONCRETE BARRIER, END ANCHORAGE, REINFORCED, TYPE C1, AS PER PLAN "A" EACH
		RAMP N1 - (N1) CHILDRENS DR. - (CHILD) MOOBERRY ST. - (MOOB) PARSONS ST. - (PAR)																							
R1	631	886+10.00 (N1)	887+75.57 (N1)	LT						170															
R2	631	886+10.00 (N1)	887+75.64 (N1)	LT				170																	
R3	631	886+10.00 (N1)	886+55.59 (N1)	RT						45															
R4	631	886+10.00 (N1)	887+81.73 (N1)	RT				171																	
R5	631	886+09.48 (N1)	887+81.25 (N1)	RT									163												
R6	631	183+89.24 (PAR)	184+49.89 (PAR)	LT									61												
R7	631	183+89.25 (PAR)	184+49.89 (PAR)	LT				61																	
R8	631	183+89.32 (PAR)	184+49.89 (PAR)	LT			226																		
R9	631	887+50.63 (N1)	887+60.69 (N1)	LT									42												
R10	631	887+54.45 (N1)	887+63.80 (N1)	RT									39												
R11	631	183+90.12 (PAR)	184+49.89 (PAR)	RT				60																	
R12	631	887+75.57 (N1)	888+24.92 (MOOB)	LT		70																			
R13	631	887+81.65 (N1)	888+22.51 (MOOB)	RT		62																			
R14	631	183+90.15 (PAR)	184+49.89 (PAR)	RT									61												
R15		183+92.52 (PAR)	184+49.89 (PAR)	R/L	307																				
R16	631	888+44.91 (MOOB)	888+55.19 (MOOB)	LT									42												
R18	631	888+24.91 (MOOB)	890+90.00 (MOOB)	LT				272																	
R19	631	888+17.04 (MOOB)	890+95.24 (MOOB)	RT									259												
R20	631	888+04.70 (MOOB)	891+06.28 (MOOB)	RT	1054																			68	
R21	631	888+22.70 (MOOB)	890+90.00 (MOOB)	RT				262																	
R22	631	888+14.38 (MOOB)	890+98.87 (MOOB)	RT				295																	
R23	631	888+06.05 (MOOB)	889+81.17 (MOOB)	RT			1337																		
R24	631	888+05.42 (MOOB)	889+86.16 (MOOB)	RT				223																	
R25	631	590+00.00 (CHILD)	590+50.36 (CHILD)	LT				121																	
R26	631	590+58.94 (CHILD)	590+85.50 (CHILD)	L/R			411																		
R27	631	590+42.15 (CHILD)	590+86.05 (CHILD)	R/L				144																	
R28	631	590+00.00 (CHILD)	590+83.27 (CHILD)	RT				127																	
R29	631	590+66.70 (CHILD)	590+82.66 (CHILD)	RT			147																		
R30	631	890+64.89 (MOOB)	890+78.57 (MOOB)	L/R					101			1													
R31	631	890+78.57 (MOOB)	890+96.78 (MOOB)	RT					21																
R32	631	590+16.82 (CHILD)	589+88.58 (CHILD)	L/R					72		3														
R33	631	590+43.69 (CHILD)		LT										1											
R34	631	182+02.63 (PAR)		RT										1											
R36	631	590+00.00 (CHILD)		L/R																				24	
F1	631	886+09.46 (N1)	887+42.64 (N1)	RT												124									
C1	631	183+62.36 (PAR)	184+49.89 (PAR)	LT														88							
C2	631	887+26.81 (N1)	183+62.36 (PAR)	LT															69						
C3	631	183+82.45 (PAR)	184+49.89 (PAR)	RT														68							
C4	631	183+47.09 (PAR)	183+82.45 (PAR)	RT															59						
C5	631	888+68.82 (MOOB)	890+90.00 (MOOB)	LT														227							
C6	631	888+62.85 (MOOB)	890+11.27 (MOOB)	RT														163							
C7	631	890+51.53 (MOOB)	890+90.00 (MOOB)	RT														64							
C8	631	590+00.12 (CHILD)	591+73.21 (CHILD)	LT														162							
C9	631	590+00.12 (CHILD)	591+59.31 (CHILD)	RT														170							
C10	631	590+00.00 (CHILD)	590+05.00 (CHILD)	L/R														16							
B1	631	786+00.00 (I70)	787+13.90 (I70)	CL																	99	4			1
B2	631	886+10.00 (N3)	891+03.44 (N3)	RT																		5			
B3	631	788+96.00 (I70)	789+67.63 (I70)	CL																1	42	2			1
B4	631	789+75.63 (I70)	791+00.00 (I-70)	CL																1	109	4			
S1	631	786+00.00 (I70)	791+00.00 (I70)	CL											707										
B5	631	787+13.90 (I-70)	788+96.00 (I-70)	CL																		1			
TOTALS CARRIED TO SUB-SUMMARY					1361	132	2121	1906	194	215	3	1	667	2	707	124		958	128	2	250	16	24	68	2

CALCULATED JAP
CHECKED TAZ

ESTIMATED QUANTITIES

FRA-70-14.54

632
2317

PLOT.CEL

ms consultants, inc.
msconsultants.com

REF. NO.	SHEET NO.	STATION FROM	STATION TO	SIDE		670 DITCH EROSION PROTECTION MAT, TYPE B		608 4" CONCRETE WALK	608 8" CONCRETE WALK	608 DETECTABLE WARNING, AS PER PLAN	608 WALKWAY, MISC.: COLUMBUS CURB RAMP, TYPE A, AS PER PLAN	608 WALKWAY, MISC.: BRICK PAVER WALK, AS PER PLAN												
		RAMP N1 - (N1) MOOBERRY ST. - (MOOB) PARSONS ST. - (PAR)																						
						SQ YD		SQ FT	SQ FT	SQ FT	EACH	SQ FT												
E1	631	886+10.00 (N1)	886+78.92 (N1)	LT		53																		
E2	631	886+91.94 (N1)	887+50.00 (N1)	LT		49																		
E3	631	886+10.00 (N1)	886+77.96 (N1)	RT		63																		
E4	631	886+92.91 (N1)	887+31.06 (N1)	RT		35																		
SW1	631	183+31.09 (PAR)	184+49.89 (PAR)	LT				900		16	2	554												
SW2	631	183+47.69 (PAR)	184+49.89 (PAR)	RT				845	448	16	2	543												
SW3	631	888+59.67 (MOOB)	890+08.48 (MOOB)	RT				803	63	8	1													
SW4	631	890+53.17 (MOOB)	890+90.00 (MOOB)	RT				150	63	8	1													
TOTALS CARRIED TO SUB-SUMMARY						200		2698	574	48	6	1097												

CALCULATED JAP
CHECKED TAZ

ESTIMATED QUANTITIES

FRA-70-14.54

633
2317

ms consultants, inc.

ms consultants, inc.
msconsultants.com

Ohio DOT Workspace
70\71 East Interchange 2E
www.msconsultants.com

1" 0.5" 0

OPF: ohdot\V8i
PCF: 60-06634_2E_Columbus

34" x 22"

Batchplot Spec: \\msconsultants.com\files\production\03\60\06634_2E\standards\plotdrv\batchplt.spc
Pen Table: N:\03\60\06634_2E\standards\tables\V8i_ms_std_06634_2D_Plan View.tbl
Plot Driver: \\msconsultants.com\files\Standards\ustn\ohdot\v8i\ms\plotting\PDF.pltcfg

Model: Sheet
Printed: 6/19/2018 @ 8:41:19 AM
File: N:\03\60\06634_2E\roadway\sheets\05322G0017A.dgn
View: FENCE_VIEW1
By: jdougas

PLOT.CEL

ms consultants, inc.
msconsultants.com

www.msconsultants.com
Ohio DOT Workspace
70\71 East Interchange 2E

1" 0.5" 0

PDF: ohdot\V8i
PCF: 60-06634_2E_Columbus

Batchplot Spec: \\msconsultants.com\files\production\Q3\60\06634_2E\standards\plotdrv\batchplt.spc
Pen Table: N:\03\60\06634_2E\standards\tables\V8i_ms_std_06634_2D_Plan View.tbl
Plot Driver: \\msconsultants.com\files\Standards\ustn\ohdot\v8i\ms\plotting\PDF.pltcfg

34" x 22"

Model: Sheet
Printed: 6/19/2018 @ 8:41:33 AM
File: N:\03\60\06634_2E\roadway\sheets\1053220Q017B.dgn
View: FENCE_VIEW1
By: jdougas

REF. NO.	SHEET NO.	STATION FROM	STATION TO	SIDE	611 12" CONDUIT, TYPE B, AS PER PLAN	611 15" CONDUIT, TYPE B	611 15" CONDUIT, TYPE C	611 18" CONDUIT, TYPE B, AS PER PLAN		611 CATCH BASIN, NO. 8	611 MANHOLE, NO. 3	611 MANHOLE RECONSTRUCTED TO GRADE		SPECIAL INLET, MISC.: CITY OF COLUMBUS DOUBLE CURB AND GUTTER INLET
		PARSONS AVE. - (PAR) MOOBERRY ST. - (MOOB) CHILDRENS' DR. - (CHILD) RAMP N1 - (N1)			FT	FT	FT	FT		EACH	EACH	EACH		EACH
D1	631	886+85.43 (N1)	887+61.27 (N1)	RT		76				1				
D2	631	886+85.41 (N1)	886+85.56 (N1)	LT			16			1				
D3	631	886+85.56 (N1)	887+72.52 (N1)	LT		88					1			
D4	631	887+72.52 (N1)	184+53.74 (PAR)	LT				123						1
D5	631	888+82.21 (MOOB)	888+81.74 (MOOB)	L/R	34									1
D6	631	889+74.07 (MOOB)	889+72.47 (MOOB)	L/R	34									1
D7	631	890+90.09 (MOOB)	889+72.47 (MOOB)	RT	116									1
D8	631	591+72.24 (CHILD)	591+38.80 (CHILD)	L/R	66							1		1
D9	631	889+72.47 (MOOB)	888+81.74 (MOOB)	RT	90									1
D10	631	888+81.74 (MOOB)	182+77.22 (PAR)	RT	51									1
TOTALS CARRIED TO SUB-SUMMARY					391	164	16	123		2	1	1		7

CALCULATED JAP
CHECKED TAZ

ESTIMATED QUANTITIES

FRA-70-14.54

634
2317

PLOT.CEL

ms consultants, inc.
msconsultants.com

www.msconsultants.com

Ohio DOT Workspace
70\71 East Interchange 2E

PID: 60-06634_2E_Columbus

DGN: ohdot\V8i

Batchplot Spec: \\msconsultants.com\files\production\03\60\06634_2E\standards\plotdrv\batchplt.spc
Pen Table: N:\03\60\06634_2E\standards\tables\V8i_ms_std_06634_2D_Plan View_NoClouds.tbl
Plot Driver: \\msconsultants.com\files\Standards\ustn\ohdot\v8i\ms\plotting\PDF.pltcfg

Model: Sheet
Printed: 2/12/2019 @ 10:01:53 AM
File: N:\03\60\06634_2E\roadway\sheets\105220P018.dgn
View: FENCE_VIEW1
By: awhite

34" x 22"

C20

P.I. STA. 891+12.19
Δ = 6° 44′ 49″ (RT)
Dc = 1° 25′ 00″
R = 4,044.41′
T = 238.40′
L = 476.25′
E = 7.02′
SC = 888+73.78
PT = 893+50.04
V (des) = 60 MPH
e (max) = 0.035
WIDENING = N/A

C60

P.I. STA. 895+94.36
Ls = 310.00′
θs = 8° 31′ 22″
LT = 206.91′
ST = 103.55′
x = 309.31′
y = 15.35′
k = 154.89′
p = 3.84′
CS = 894+90.81
ST = 898+00.81

CROSS REFERENCES	
SHEET NO	DESCRIPTION
	PROFILE(S)
676-681	I-70 EB
704-706	RAMP N3
710-712	*RAMP Q3*
724-725	MOOBERRY ST
733	*AMBULANCE DR*
1090	INTERSECTION DETAIL
1116-1117	DRIVE DETAILS
1126-1127	PAVEMENT JOINT DETAIL
	PAVEMENT DETAIL
1172	GORE DETAILS
1257C, 1258A, 1259E, 1260B-C, E	STORM SEWER PROFILES
1283-1285	SANITARY SEWER DETAILS
1144, 1146	GRADING DETAIL

C73

P.I. STA. 894+38.76
Δ = 13° 37′ 39″ (LT)
Dc = 6° 00′ 00″
R = 954.93′
T = 114.10′
L = 227.13′
E = 6.79′
PC = 893+24.66
PT = 895+51.79
V (des) = 30 MPH
e (max) = NC
WIDENING = N/A

Ⓐ STA 892+35.21 ℄ MOOBERRY ST. = STA 692+27.59 ℄ AMBULANCE DR

Ⓑ STA 892+18.77 ℄ RAMP N3 = STA 892+11.64 ℄ RAMP Q3

Ⓒ STA 895+21.23 ℄ RAMP N3 = STA 795+21.22 64.00′ ℄ I-70

Ⓓ PROP. ELEC. BY AEP 9-5″ PVC DUCT (SEE NOTE, SHEET 89)

FRA-70-1498

MATCH LINE STA. 791+00 SEE SHEET 631

MATCH LINE STA. 796+00 SEE SHEET 638

MATCH LINE STA. 890+90 SEE SHEET 631

MATCH LINE STA. 896+00 SEE SHEET 638

MATCH LINE STA. 895+70 SEE SHEET 638

WALL I-13T FOR I-70 WB, SEE SHEET 602

I-70 EB

RAMP N3

RAMP Q3

MOOBERRY ST.

AMBULANCE DR

RAYMOND ST (WEST)

℄ CONST. I-70

℄ CONST. RAMP N3

℄ CONST. RAMP Q3

℄ CONST. MOOBERRY

℄ CONST. AMBU. DR

S 82° 30′ 00″ E

S 83° 38′ 45″ E

S 73° 54′ 26″ E

+90.00 END BARRIER

PT Sta. 793+37.25

PT Sta. 893+50.04

PT Sta. 891+26.78

PC Sta. 893+24.66

PT Sta. 895+51.79

+33.00 52.00′ RT

+33.00 54.00′ RT

+60.00 36.50′ RT

END UNCLASSIFIED UD +27.26, 10.75′ RT ℄ 4″ UD = 798.82

CS Sta. 894+90.81 BEGIN EOP TAPER 16.50′ LT

BEGIN EOP TAPER +00.00, 12.00′ RT

BEGIN EOP TAPER +60.00, 24.00′ RT

BEGIN CURB TAPER +64.12′ 23.00′ LT

MEET EX. S/W +39.10 EX LA-R/W

+14.38 12.00′ RT

+12.33 ℄ MOOBERRY 21.88′

+62.60 ℄ MOOBERRY 26.81′

BEGIN RDWY WORK AMBULANCE DR STA. 691+05.00

POT Sta. 690+79.81

B-052-1-10
B-052-2-10
B-052-3-10
B-052-4-10
B-051-8-10
B-052-0-09
B-146-1-10
B-146-2-10
B-147-0-09
TH-01-2012
TH-04-2011

CAUTION: DO NOT DISTURB EX. ELECTRIC CONDUIT BANK

CAUTION: DO NOT DISTURB EX. ELECTRIC CONDUIT BANK

UNDERGROUND TUNNEL

UNDERGROUND TUNNEL

TBR ENCROACHING HEDGES, LIGHT POLE, TREES

PRIVATE LIGHT POLE

NATIONWIDE CHILDREN'S HOSPITAL

NATIONWIDE CHILDRENS HOSPITAL SIGN STEEL POSTS

ASPHALT PARKING LOT

CONCRETE WALK

PR. SIDEWALK

5′ CHAIN LINK FENCE

21" VCP — SAN —

15" VCP

12" CPP

15" RCP

18" CPP

42" RCP

EX. 4-5" PVC DUCT

12" ABANDONED FRA.062 5.30.017

ABANDONED WATER LINE PER P-16-146

FH & WV PER SUE LEVEL C

WV PER SUE LEVEL C

OVERHEAD SIGN

WATER METER PIT (P2957_04)

ELEC. VAULT

ASPHALT LEVEL

TOPPING

FLOWER BED

BRUSH

TO REMAIN

TO REMAIN

CONSTRUCTED IN PHASE 2C

24" CASING PIPE

HORIZONTAL SCALE IN FEET

CALCULATED

CHECKED

PLAN - I-70 EASTBOUND
STA. 791+00 TO STA. 796+00

FRA-70-14.54

635
2317

ms consultants, inc.

PLOT.CEL

ms consultants, inc.
msconsultants.com

www.msconsultants.com

Ohio DOT Workspace
70\71 East Interchange 2E

0 0.5" 1"

PDF: ohdot\V8i
PCF: 60-06634_2E_Columbus

Batchplot Spec: \\msconsultants.com\files\production\03\60\06634_2E\standards\plotdrv\batchplt.spc
Pen Table: N:\03\60\06634_2E\standards\tables\V8i_ms_std_06634_2D_Plan View.tbl
Plot Driver: \\msconsultants.com\files\Standards\usetn\ohdot\v8i\ms\plotting\PDF.pltcfg

34" x 22"

View: FENCE_VIEW1
By: jdouglas

Model: Sheet
Printed: 7/31/2018 @ 11:48:17 AM
File: N:\03\60\06634_2E\roadway\sheets\05322\0018.dgn

REF. NO.	SHEET NO.	STATION FROM	STATION TO	SIDE	202 STRUCTURE REMOVED (CU YD)	202 PAVEMENT REMOVED (SQ YD)	202 CONCRETE BARRIER REMOVED (FT)	202 VALVE BOX REMOVED (EACH)	202 WALK REMOVED (SQ FT)	202 CURB REMOVED (FT)	202 PIPE REMOVED, 24" AND UNDER (FT)	202 PIPE REMOVED, OVER 24" (FT)	202 GUARDRAIL REMOVED (FT)	202 MANHOLE REMOVED (EACH)	202 CATCH BASIN REMOVED (EACH)	202 INLET REMOVED (EACH)	202 FENCE REMOVED (FT)	252 FULL DEPTH PAVEMENT SAWING (FT)	512 SEALING OF CONCRETE SURFACES (SQ YD)	608 DETECTABLE WARNING, AS PER PLAN (SQ FT)	608 4" CONCRETE WALK (SQ FT)	608 8" CONCRETE WALK (SQ FT)	608 WALKWAY, MISC.: COLUMBUS CURB RAMP, TYPE A, AS PER PLAN (EACH)	608 WALKWAY, MISC.: COLUMBUS CURB RAMP, TYPE G, AS PER PLAN (EACH)	608 WALKWAY, MISC.: COLUMBUS CURB RAMP, TYPE P-6, AS PER PLAN (EACH)	609 CURB, MISC.: COLUMBUS 18" CONCRETE CURB, AS PER PLAN (FT)	653 TOPSOIL FURNISHED AND PLACED (CU YD)
		I-70 - (I70) RAMP Q3 - (Q3) MOOBERRY ST. (MOOB) AMBULANCE DR. - (AMBL)																									
R1	635	890+95.24 (MOOB)	895+70.00 (MOOB)	R/L													480										
R2	635	890+98.87 (MOOB)	895+70.00 (MOOB)	R/L						481																	
R3	635	891+08.49 (MOOB)	892+49.95 (MOOB)	RT						179																	
R4	635	891+08.72 (MOOB)	892+40.66 (MOOB)	RT					1019																		
R5	635	890+98.87 (MOOB)	895+70.00 (MOOB)	R/L		1767																					115
R6	635	890+90.00 (MOOB)	895+82.44 (MOOB)	R/L						488																	
R7	635	892+17.20 (MOOB)	893+66.57 (MOOB)	LT									151														
R8	635	891+96.28 (Q3)	893+81.10 (Q3)	R/L									200														
R9	635	891+40.41 (Q3)	896+01.16 (Q3)	R/L						483																	
R10	635	893+81.05 (Q3)	894+14.86 (Q3)	LT			34																				
R11	635	893+66.56 (MOOB)	894+02.45 (MOOB)	LT			34																				
R12	635	892+71.05 (MOOB)	894+55.48 (MOOB)	RT						528																	
R13	635	892+67.29 (MOOB)	894+55.01 (MOOB)	RT					1107																		
R14	635	894+43.22 (MOOB)	894+82.79 (MOOB)	LT									39														
R15	635	794+35.59 (I-70)	796+00.00 (I-70)	RT						169																	
R16	635	894+78.70 (MOOB)	895+02.65 (MOOB)	RT						42																	
R17	635	895+25.05 (MOOB)	895+70.00 (MOOB)	RT						51																	
R18	635	895+27.68 (MOOB)	895+70.00 (MOOB)	RT					169																		
R19	635	895+75.43 (Q3)	896+00.00 (Q3)	RT	24																						
R20	635	890+94.42 (MOOB)	891+34.07(MOOB)	RT							46				1	1											
R21	635	893+17.08 (MOOB)	894+12.12 (MOOB)	LT							96					1											
R22	635	894+16.79 (MOOB)	894+31.69 (MOOB)	L/R							36				1	1											
R23	635	894+54.96 (MOOB)	895+70.00(MOOB)	LT							156			2													
R24	635	894+42.58 (Q3)	896+00.00 (Q3)	L/R								178															
R25	635	895+76.71 (Q3)	896+00.00 (Q3)	LT							23				1												
R26	635	892+33.36 (MOOB)		RT				1																			
R27	635	893+74.30 (MOOB)	893+96.34 (MOOB)	RT				2																			
R28	635	894+28.24 (MOOB)	894+49.90 (MOOB)	RT				6																			
R29	635	894+67.61 (MOOB)	894+74.19 (MOOB)	RT				2																			
R30	635	961+05.00 (AMBL)		RT/LT														32									
R31	635	894+55.49 (MOOB)	894+78.70 (MOOB)	RT														24									
R32	635	895+02.66 (MOOB)	895+23.90 (MOOB)	RT														22									
C1	635	890+90.00 (MOOB)	895+70.00 (MOOB)	LT																						476	
C2	635	890+90.00 (MOOB)	892+31.59 (MOOB)	RT																						154	
C3	635	691+05.00 (MOOB)	691+89.78 (MOOB)	LT																						85	
C4	635	691+05.00 (MOOB)	691+69.16 (MOOB)	RT																						67	
C5	635	892+59.45 (MOOB)	894+55.49 (MOOB)	RT																						234	
C6	635	894+78.70 (MOOB)	895+02.66 (MOOB)	RT																						57	
C7	635	895+23.90 (MOOB)	895+70.00 (MOOB)	RT																						58	
SW1	635	890+90.00 (MOOB)	892+30.28 (MOOB)	RT																8	770	68	1				
SW2	635	691+39.10 (AMBL)	691+81.60 (AMBL)	LT																	246						
SW3	635	892+59.99 (MOOB)	894+55.02 (MOOB)	RT																16	959	236	1		1		
SW4	635	894+79.98 (MOOB)	895+02.44 (MOOB)	RT																		126					
SW5	635	895+23.76 (MOOB)	895+70.00 (MOOB)	RT																8	201	49		1			
S1	635	791+00.00 (I70)	792+89.95 (I70)	CL															269								
S2	635	794+89.68 (I70)	796+00.00 (I70)	LT															100								
TOTALS CARRIED TO SUB-SUMMARY					24	1767	68	11	2295	2421	357	178	390	2	3	3	480	78	369	32	2176	479	2	1	1	1131	115

CALCULATED JAP
CHECKED TAZ

ESTIMATED QUANTITIES

FRA-70-14.54

636
2317

ms consultants, inc.

PLOT.CEL

ms consultants, inc.
msconsultants.com

www.msconsultants.com
Ohio DOT Workspace
70\71 East Interchange 2E

1" 0.5" 0

Batchplot Spec: \\msconsultants.com\files\production\Q3\60\06634_2E\standards\plotdrv\batchplt.spc
Pen Table: N:\Q3\60\06634_2E\standards\tables\V8i_ms_std_06634_2D_Plan View_NoClouds.tbl
Plot Driver: \\msconsultants.com\files\Standards\ustn\ohdot\v8i\ms\plotting\PDF.pltcfg

Model: Sheet
Printed: 2/12/2019 @ 10:01:56 AM
File: N:\Q3\60\06634_2E\roadway\sheets\V05322G008A.dgn

View: FENCE_VIEW1
By: awhite

34" x 22"

REF. NO.	SHEET NO.	STATION FROM	STATION TO	SIDE	253 PAVEMENT REPAIR SQ YD	611 15" CONDUIT, TYPE B FT	622 CONCRETE BARRIER, SINGLE SLOPE, TYPE C1 FT	622 CONCRETE BARRIER, END ANCHORAGE, REINFORCED, TYPE C1 EACH	622 CONCRETE BARRIER, SINGLE SLOPE, TYPE D, AS PER PLAN "D" FT	622 CONCRETE BARRIER, END ANCHORAGE, REINFORCED, TYPE D EACH	626 BARRIER REFLECTOR, TYPE 1, BI-DIRECTIONAL EACH	601 CONCRETE SLOPE PROTECTION SQ YD	670 DITCH EROSION PROTECTION MAT, TYPE B SQ YD	611 12" CONDUIT, TYPE B, AS PER PLAN FT	611 12" CONDUIT, TYPE C, AS PER PLAN FT	611 15" CONDUIT, TYPE C FT	611 18" CONDUIT, TYPE B, AS PER PLAN FT	611 42" CONDUIT, TYPE B FT	611 CONDUIT, MISC: 18" C905 PIPE, CLASS 235, DR18, TYPE B, AS PER PLAN FT	611 INLET, MISC.: CITY OF COLUMBUS DOUBLE CURB AND GUTTER INLET EACH	611 CATCH BASIN, NO. 8 EACH	611 MANHOLE, MISC.: CITY OF COLUMBUS , MANHOLE, TYPE C EACH	611 MANHOLE RECONSTRUCTED TO GRADE EACH	611 MANHOLE ADJUSTED TO GRADE EACH	611 MANHOLE, NO. 3, AS PER PLAN EACH	611 15" CONDUIT, TYPE B, 706.02, AS PER PLAN FT
		RAMP Q3 - (Q3) MOOBERRYST. - (MOOB) AMBULANCE DR. - (AMB)																								
B1	635	791+00.00 (I70)	792+30.00 (I70)	CL			115	1			4															
B2	635	794+89.68 (I70)	796+00.00 (I70)	LT					95	1																
B3	635	792+50.00 (I70)	792+59.36 (I70)	CL				1																		
B4	635	792+67.36 (I70)	792+90.00 (I70)	CL				2			2															
B5	635	792+90.00 (I-70)	796+00.00 (I-70)	CL							3															
E1	635	891+01.39 (Q3)	893+98.81 (Q3)	LT								393														
E2	635	893+98.81 (Q3)	894+67.72 (Q3)	LT									56													
E3	635	894+82.25 (Q3)	896+00.00 (Q3)	LT									95													
E4	635	890+74.90 (MOOB)	890+93.52 (MOOB)	LT									17													
E5	635	891+06.48 (MOOB)	892+54.25 (MOOB)	LT									125													
D1	635,638	894+75.00 (Q3)	896+45.47 (Q3)	LT												166						1				
D2	635, 638	896+47.41 (Q3)	894+12.12 (MOOB)	L/R														228						1		
D3	635	894+24.42 (MOOB)	894+12.12 (MOOB)	LT										19							1					
D4	635	895+39.91 (MOOB)	895+40.19 (MOOB)	LT										8							1					
D5	635	895+40.19 (MOOB)	894+54.96 (MOOB)	LT													84						1			
D6	635	895+39.88 (MMOB)	895+40.12 (MOOB)	RT										7							1					
D7	635, 638	896+35.31 (MOOB)	895+40.12 (MOOB)	RT	55															95			1			
D8	635	895+40.12 (MOOB)	895+40.19 (MOOB)	L/R	11												20						1			
D9	635	894+24.43 (MOOB)	894+12.12 (MOOB)	L/R										34							1					
D10	635	893+57.08 (MOOB)	892+93.60 (MOOB)	RT										65							1					
D11	635	892+93.61 (MOOB)	892+93.60 (MOOB)	L/R										34							1					
D12	635	892+93.60 (MOOB)	891+95.00 (MOOB)	RT										99							1					
D13	635	891+95.61 (MOOB)	891+95.00 (MOOB)	L/R										34							1					
D14	635	891+95.00 (MOOB)	890+90.09 (MOOB)	RT										104							1					
D15	635	890+99.56 (MOOB)	890+91.06 (MOOB)	LT											37							1				
D16	635	890+91.06 (MOOB)	890+90.09 (MOOB)	L/R										34							1					
D17	635	894+54.96 (MOOB)	894+12.12 (MOOB)	LT													43							1		
D18	635	894+54.96 (MOOB)	894+54.96 (MOOB)	LT																						8
D19	635	792+75.00 (I70)	800+77.28 (I70)	RT		801																			1	
SA1	635	691+67.86 (AMB)		LT																				1		
SA2	635	691+66.77 (AMB)		LT																				1		
SA3	635	894+53.45 (MOOB)		RT																				1		
B6	635	791+00.00 (I-70)	796+00.00 (I-70)	RT							6															
TOTALS CARRIED TO SUB-SUMMARY					66	801	115	4	95	1	15	393	293	438	37	166	147	228	95	10	2	4	1	3	2	8

CALCULATED JAP
CHECKED TAZ

ESTIMATED QUANTITIES

FRA-70-14.54

637
2317

PLOT.CEL
ms consultants, inc.
msconsultants.com
Ohio DOT Workspace
70\71 East Interchange 2E
www.msconsultants.com
0 0.5" 1"
Batchplot Spec: \\msconsultants.com\Files\production\03\60\06634..2E\standards\plotdrv\batchplt.spc DGN: ohdot\Bi
Pen Table: N:\03\60\06634..2E\standards\tables\V8i_ms_std_06634_2D_Plan View_NoClouds.tbl PLT: 60-06634_2E_Columbus
Plot Driver: \\msconsultants.com\Files\Standards\astm\ohdot\v8i\ms\plotting\PDF.pltcfg
Model: Sheet View: FENCE_VIEW1
Printed: 2/12/2019 @ 10:02:18 AM By: awhite
File: N:\03\60\06634..2E\roadway\sheets\105322GP019.dgn
34" x 22"

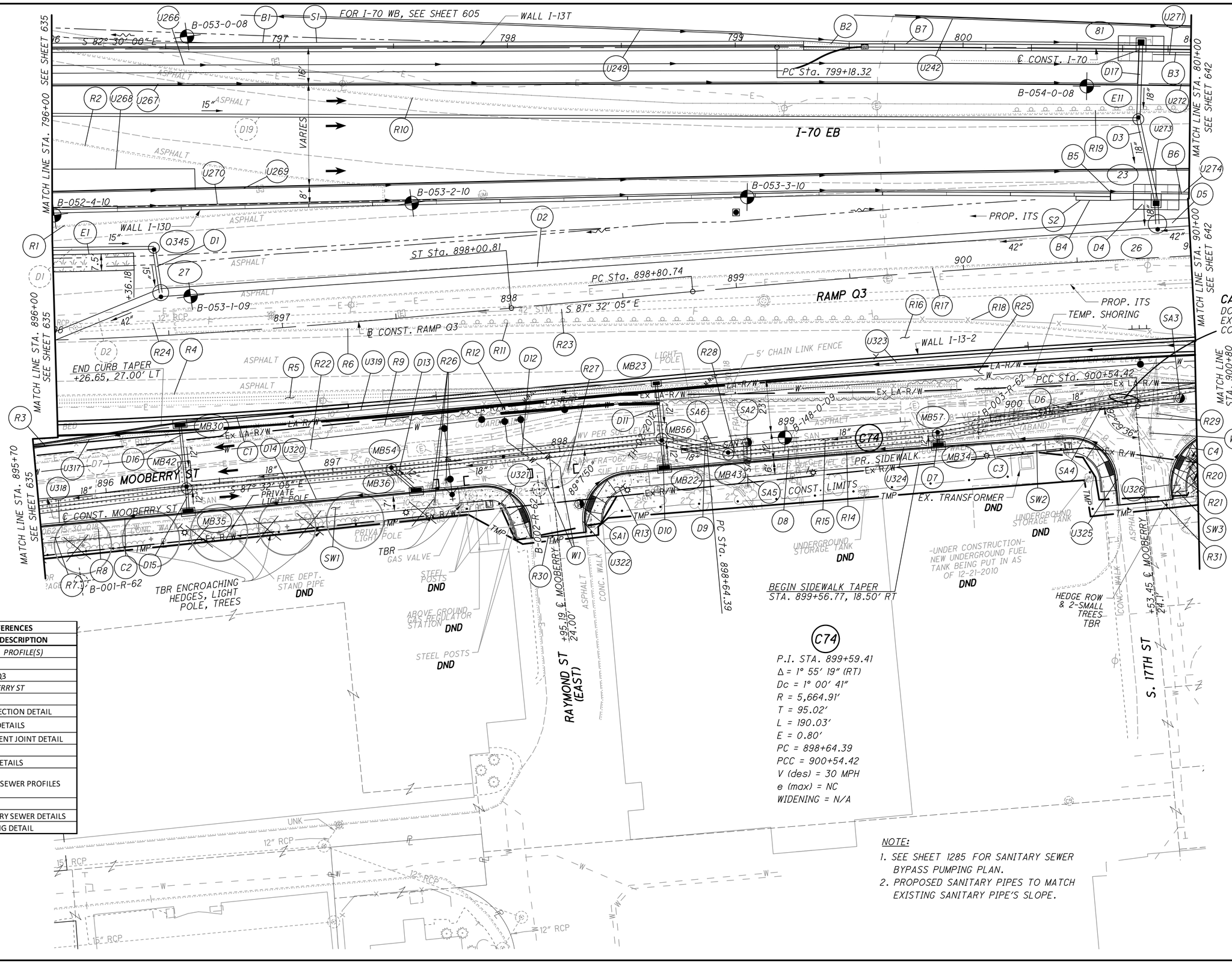

CROSS REFERENCES	
SHEET NO	DESCRIPTION
	PROFILE(S)
676-681	I-70 EB
710-712	RAMP Q3
724-725	*MOOBERRY ST*
1091-1092	INTERSECTION DETAIL
1116, 1118	DRIVE DETAILS
1128-1129	PAVEMENT JOINT DETAIL
1173	GORE DETAILS
1257C, 1258A, E, 1260B, C, E	STORM SEWER PROFILES
1283-1285	SANITARY SEWER DETAILS
1146	GRADING DETAIL

HORIZONTAL SCALE IN FEET
0 10 20 40
CALCULATED
CHECKED

PLAN - I-70 EASTBOUND STA. 796+00 TO STA. 801+00

FRA-70-14.54

638
2317

ms consultants, inc.

PLOT.CEL

ms consultants, inc.
msconsultants.com

www.msconsultants.com
Ohio DOT Workspace
70\71 East Interchange 2E

1" 0.5" 0

PDF: ohdot\V8i
PCF: 60-06634_2E_Columbus

Batchplot Spec: \\msconsultants.com\files\production\Q3\60\06634_2E\standards\plotdir\batchplt.spc
Pen Table: N:\Q3\60\06634_2E\standards\tables\V8i_ms_std_06634_2D_Plan View.tbl
Plot Driver: \\msconsultants.com\files\Standards\ustn\ohdot\v8i\ms\plotting\PDF.pltcfg

34" x 22"

Model: Sheet
Printed: 6/19/2018 @ 8:42:49 AM
File: N:\Q3\60\06634_2E\roadway\sheets\05322G0018.dgn
View: FENCE_VIEW1
By: jdouglas

REF. NO.	SHEET NO.	STATION FROM	STATION TO	SIDE	202 STRUCTURE REMOVED	202 PAVEMENT REMOVED	202 WALK REMOVED	202 CURB REMOVED	202 PIPE REMOVED, 24" AND UNDER	202 PIPE REMOVED, OVER 24"	202 GUARDRAIL REMOVED	202 MANHOLE REMOVED	202 CATCH BASIN REMOVED	202 INLET REMOVED	202 FENCE REMOVED	202 CONCRETE MEDIAN REMOVED	512 SEALING OF CONCRETE SURFACES	202 VALVE BOX REMOVED	252 FULL DEPTH PAVEMENT SAWING		630 WATER WORK MISC.: HEAVY DUTY VALVE BOX ADJUSTED TO GRADE (COL. 807)				
		RAMP Q3 - (Q3) MOOBERRY ST. (MOOB) I-70 - (I70)			CU YD	SQ YD	SQ FT	FT	FT	FT	FT	EACH	EACH	EACH	FT	SQ YD	SQ YD	EACH	FT		EACH				
R1	638	796+00.00 (I-70)	797+45.88 (I-70)	RT				145																	
R2	638	796+00.00 (I-70)	797+45.88 (I-70)	RT				156																	
R3	638	895+70.00 (MOOB)	899+74.95 (MOOB)	LT											406										
R4	638	895+82.21 (MOOB)	900+80.00 (MOOB)	LT				500																	
R5	638	895+81.98 (MOOB)	899+75.85 (MOOB)	LT	373																				
R6	638	896+52.84 (Q3)	900+99.65 (Q3)	RT				448																	
R7	638	895+70.00 (MOOB)	897+83.58 (MOOB)	RT			1066																		
R8	638	895+70.00 (MOOB)	897+84.23 (MOOB)	RT				229																	
R9	638	895+70.00 (MOOB)	900+80.00 (MOOB)	LT				511																	
R10	638	796+00.00 (I-70)	801+00.00 (I-70)	RT				501																	
R11	638	897+73.61 (Q3)	899+61.83 (Q3)	RT							189														
R12	638	897+73.38 (MOOB)	898+12.56 (MOOB)	LT							39														
R13	638	898+08.55 (MOOB)	900+42.65 (MOOB)	RT			1549																		
R14	638	898+07.96 (MOOB)	900+43.23 (MOOB)	RT				277																	
R15	638	895+70.00 (MOOB)	900+80.00 (MOOB)	R/L		1486																			
R16	638	899+41.30 (Q3)	900+99.60 (Q3)	RT		253																			
R17	638	896+52.84 (Q3)	901+00.00 (Q3)	L/R				458																	
R18	638	899+61.83 (Q3)	901+00.00 (Q3)	RT											139										
R19	638	800+22.00 (I70)	801+00.00 (I70)	RT							78														
R20	638	900+68.83 (MOOB)	900+80.00 (MOOB)	RT			231																		
R21	638	900+68.21 (MOOB)	900+80.00 (MOOB)	RT				36																	
R22	638	895+70.00 (MOOB)	898+11.51 (MOOB)	L/R					249					3											
R23	638	896+00.00 (Q3)	901+00.00(Q3)	L/R						500		2													
R24	638	896+00.00 (Q3)	896+95.55 (Q3)	LT					95				1												
R25	638	899+73.04 (MOOB)	900+80.00 (MOOB)	LT												74									
R26	638	897+42.78 (MOOB)	897+49.01 (MOOB	RT														3							
R27	638	898+02.77 (MOOB)		RT														1							
R28	638	898+76.33 (MOOB)		RT														1							
R29	638	900+52.24 (MOOB)	900+62.61 (MOOB)	RT														2							
R30	638	897+94.25 (MOB)	898+07.99 (MOOB)	RT															24						
R31	638	900+43.23 (MOOB)	900+68.20 (MOOB)	RT															24						
S1	638	796+00.00 (I70)	801+000.00 (I70)	CL													593								
S2	638	800+15.15 (I70)	801+000.00 (I70)	RT													60								
W1	638	897+92.53 (MOOB)	897+99.54 (MOOB)	RT																	2				
W2	638	900+59.22 (MOOB)		RT																	1				
TOTALS CARRIED TO SUB-SUMMARY					373	1739	2846	3261	344	500	306	2	1	3	545	74	653	7	48		3				

CALCULATED JAP
CHECKED TAZ

ESTIMATED QUANTITIES

FRA-70-14.54

639
2317

ms consultants, inc.

PLOT.CEL

ms consultants, inc.
msconsultants.com

www.msconsultants.com
Ohio DOT Workspace
70\71 East Interchange 2E

REF. NO.	SHEET NO.	STATION		SIDE		608	608	608	609			622	622	622	622	622	622	626		670
		RAMP Q3 - (Q3) MOOBERRY ST. (MOOB) I-70 - (I70)				4" CONCRETE WALK	8" CONCRETE WALK	WALKWAY, MISC.: COLUMBUS CURB RAMP, TYPE P-6, AS PER PLAN	CURB, MISC.: COLUMBUS 18" CONCRETE CURB, AS PER PLAN			CONCRETE BARRIER, END ANCHORAGE, REINFORCED, TYPE B1	CONCRETE BARRIER, END ANCHORAGE, REINFORCED, TYPE C1, AS PER PLAN "B"	CONCRETE BARRIER, END ANCHORAGE, REINFORCED, TYPE C, AS PER PLAN "C"	CONCRETE BARRIER, TYPE C1	CONCRETE BARRIER, SINGLE SLOPE, TYPE D, AS PER PLAN "D"	CONCRETE BARRIER, END ANCHORAGE, REINFORCED, TYPE D	BARRIER REFLECTOR, TYPE 1, BI-DIRECTIONAL		DITCH EROSION PROTECTION MAT, TYPE B
		FROM	TO			SQ FT	SQ FT	EACH	FT			EACH	EACH	EACH	FT	FT	EACH	EACH		SQ YD
C1	638	895+70.00 (MOOB)	896+51.77 (MOOB)	LT					82											
C2	638	895+70.00 (MOOB)	897+84.25 (MOOB)	RT					230											
C3	638	898+07.99 (MOOB)	900+43.23 (MOOB)	RT					272											
C4	638	900+68.11 (MOOB)	900+80.00 (MOOB)	RT					30											
SW1	638	895+70.00 (MOOB)	897+84.25 (MOOB)	RT		1289	160	1												
SW2	638	898+08.45 (MOOB)	900+42.73 (MOOB)	RT		998	284	2												
SW3	638	900+68.63 (MOOB)	900+80.00 (MOOB)	RT			36	1												
B1	638	796+00.00 (I70)	799+30.00 (I70)	CL												330				
B2	638	799+30.00 (I70)	800+68.12 (I70)	CL									1					2		
B3	638, 642	800+88.12 (I70)	801+03.10 (I70)	CL								1								
B4	638	800+50.15 (I70)	800+65.15 (I70)	RT													1			
B5	638	900+66.25 (Q3)	900+76.25 (Q3)	LT										1						
B6	638, 642	900+96.03 (Q3)	901+02.01 (Q3)	LT														1		
B7	638	796+00.00 (I70)	801+00.00 (I70)	CL											118			6		
E1	638	896+00.00 (Q3)	896+36.18 (Q3)	LT																30
B8	638	796+00.00 (I-70)	900+66.25 (Q3)	RT/LT														4		
TOTALS CARRIED TO SUB-SUMMARY						2287	480	4	614			1	1	1	118	330	1	13		30

CALCULATED JAP
CHECKED TAZ

ESTIMATED QUANTITIES

FRA-70-14.54

Batchplot Spec: \\msconsultants.com\files\production\03\60\06634_2E\standards\plotdrv\batchplt.spc
Pen Table: N:\03\60\06634_2E\standards\tables\V8i_ms_std_06634_2D_Plan View_NoClouds.tbl
Plot Driver: \\msconsultants.com\files\Standards\ustn\ohdot\v8i\ms\plotting\PDF.pltcfg
IPLOT: ohdot(V8i)
PDF: 60-06634_2E_Columbus

34" x 22"

Model: Sheet
View: FENCE_VIEW1
Printed: 10/24/2018 @ 1:41:57 PM
By: hbrendlinger
File: N:\03\60\06634_2E\roadway\sheets\105322GQ019A.dgn

ms consultants, inc.

PLOT.CEL

ms consultants, inc.
msconsultants.com
www.msconsultants.com

Ohio DOT Workspace
70/71 East Interchange 2E

ESTIMATED QUANTITIES

REF. NO.	SHEET NO.	STATION FROM	STATION TO	SIDE	202 PIPE REMOVED, 24" AND UNDER	253 PAVEMENT REPAIR	611 12" CONDUIT, TYPE B, AS PER PLAN	611 15" CONDUIT, TYPE B	611 18" CONDUIT, TYPE B	611 42" CONDUIT, TYPE B	611 CONDUIT MISC.: 8" C900 PIPE, CLASS 100, DR25, TYPE B	611 CONDUIT MISC.: 15" C900 PIPE, CLASS 100, DR25, TYPE B	611 INLET, MISC.: CITY OF COLUMBUS DOUBLE CURB AND GUTTER INLET	611 CATCH BASIN, NO. 6, AS PER PLAN	611 INLET, NO. 3 FOR SINGLE SLOPE BARRIER, TYPE C	611 MANHOLE, MISC.: CITY OF COLUMBUS, MANHOLE, TYPE C	611 MANHOLE ADJUSTED TO GRADE	611 MANHOLE, NO. 3	611 MANHOLE, NO. 3, AS PER PLAN	611 CONDUIT, MISC: 18" C905 PIPE, CLASS 235, DR18, TYPE B, AS PER PLAN	611 18" CONDUIT, TYPE B, 706.02, AS PER PLAN	611 INLET, NO. 3 FOR SINGLE SLOPE BARRIER, TYPE C1	601 RIPRAP, TYPE D, AS PER PLAN
		RAMP Q3 - (Q3) MOOBERRY ST. (MOOB) I-70 - (I70)			FT	SQ YD	FT	FT	FT	FT	FT	FT	EACH	EACH	EACH	EACH	EACH	EACH	EACH	FT	FT	EACH	SQ YD
D1	638	896+45.47 (Q3)	896+47.41 (Q3)	LT				20										1					
D2	638	900+86.06 (Q3)	896+47.41 (Q3)	LT						439									1				
D3	638	800+78.12 (I70)	800+85.54 (I70)	L/R					38										1				
D4	638	800+85.54 (I70)	900+86.06 (Q3)	LT					9						1								10
D5	638, 642	902+97.75 (Q3)	900+86.06 (Q3)	LT						212									1				
D6	638, 642	900+94.22 (MOOB)	899+65.94 (MOOB)	L/R		65										1					130		
D7	638	899+65.78 (MOOB)	899+65.94 (MOOB)	RT			5						1										
D8	638	899+65.94 (MOOB)	898+73.45 (MOOB)	RT		57										1					92		
D9	638	898+73.45 (MOOB)	898+44.92 (MOOB)	RT		19										1					30		
D10	638	898+44.94 (MOOB)	898+44.92 (MOOB)	RT			13						1										
D11	638	898+44.78 (MOOB)	898+44.92 (MOOB)	LT		3	24							1									
D12	638	898+44.92 (MOOB)	897+25.64 (MOOB)	CL		72										1					119		
D13	638	897+35.60 (MOOB)	897+25.64 (MOOB)	RT			14						1										
D14	638	897+25.64 (MOOB)	896+35.31 (MOOB)	CL		57										1				90			
D15	638	896+35.00 (MOOB)	896+35.31 (MOOB)	RT			10						1										
D16	638	896+34.93 (MOOB)	896+35.31 (MOOB)	LT		6	28						1										
D17	638	800+78.12 (I70)	800+77.28 (I70)	RT					33													1	
SA1	638	898+06.36 (MOOB)		RT													1						
SA2	638	898+82.14 (MOOB)		RT													1						
SA3	638	900+73.06 (MOOB)		LT													1						
SA4	638	899+89.43 (MOOB)	900+73.06 (MOOB)	L/R	84	27					84												
SA5	638	898+80.80 (MOOB)	898+82.14 (MOOB)	RT	19							19											
SA6	638	898+53.05 (MOOB)	898+82.14 (MOOB)	RT	29	12					29												
TOTALS CARRIED TO SUB-SUMMARY					132	318	94	20	80	651	113	19	5	1	1	5	3	1	3	90	371	1	10

CALCULATED JAP
CHECKED TAZ

FRA-70-14.54

ms consultants, inc.

34" x 22"

Model: Sheet
Printed: 2/13/2019 @ 7:43:32 PM
View: FENCE_VIEW1
By: hbrendlinger

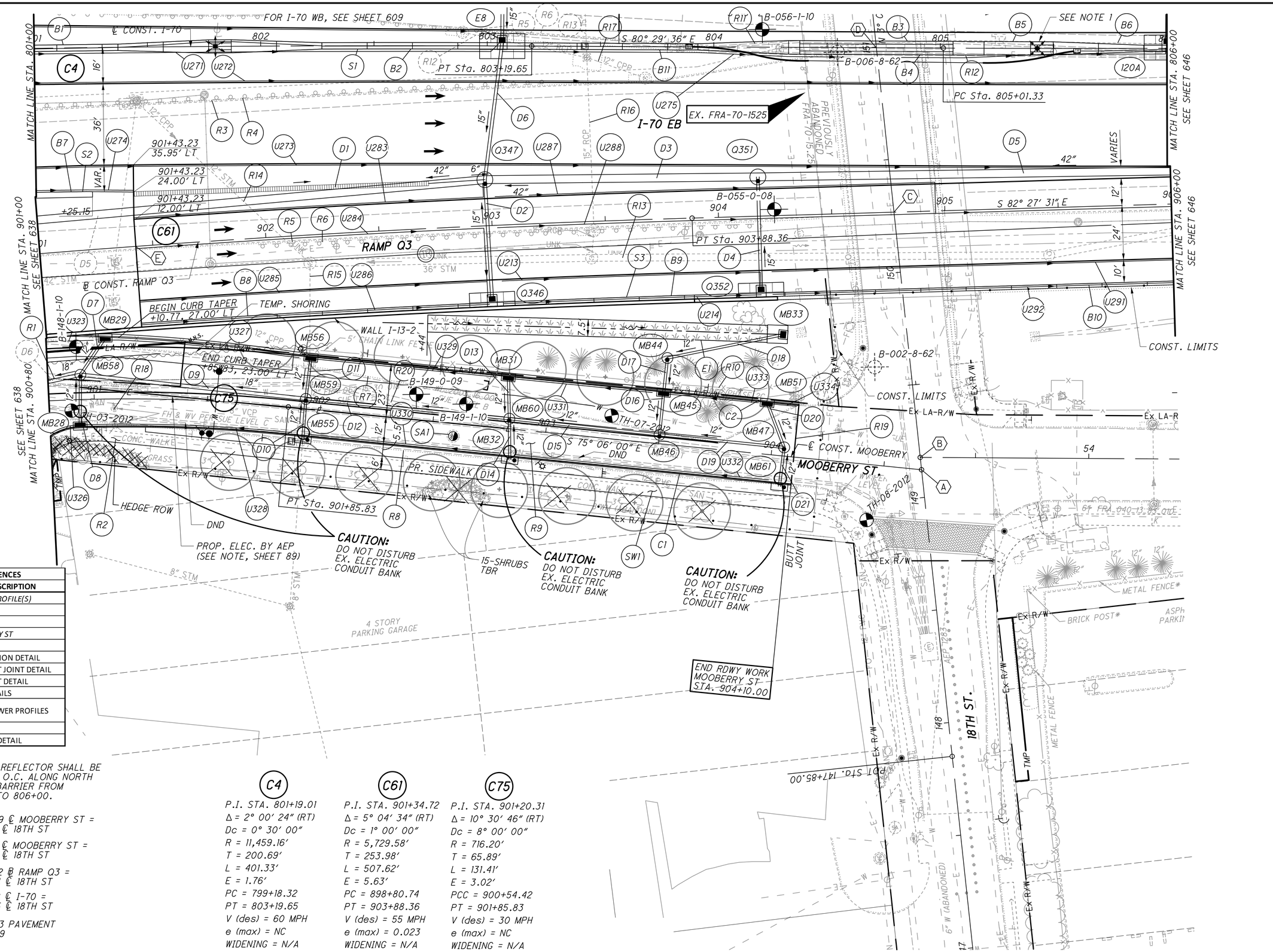

CROSS REFERENCES	
SHEET NO	DESCRIPTION
	PROFILE(S)
676-681	I-70 EB
710-712	RAMP Q3
724-725	MOOBERRY ST
1093	INTERSECTION DETAIL
1129-1130	PAVEMENT JOINT DETAIL
	PAVEMENT DETAIL
1173-1175	GORE DETAILS
1258A, B, E, 1260B-D	STORM SEWER PROFILES
1147	GRADING DETAIL

NOTE 1: BARRIER REFLECTOR SHALL BE INSTALLED AT 25' O.C. ALONG NORTH FACE OF MEDIAN BARRIER FROM STATION 801+00 TO 806+00.

(A) STA 904+66.69 ℄ MOOBERRY ST = STA 149+12.27 ℄ 18TH ST

(B) STA 53+25.62 ℄ MOOBERRY ST = STA 149+17.75 ℄ 18TH ST

(C) STA 904+77.52 ℄ RAMP Q3 = STA 150+26.64 ℄ 18TH ST

(D) STA 804+71.78 ℄ I-70 = STA 150+99.65 ℄ 18TH ST

(E) BEGIN RAMP Q3 PAVEMENT STA. 901+42.49

C4
P.I. STA. 801+19.01
Δ = 2° 00' 24" (RT)
Dc = 0° 30' 00"
R = 11,459.16'
T = 200.69'
L = 401.33'
E = 1.76'
PC = 799+18.32
PT = 803+19.65
V (des) = 60 MPH
e (max) = NC
WIDENING = N/A

C61
P.I. STA. 901+34.72
Δ = 5° 04' 34" (RT)
Dc = 1° 00' 00"
R = 5,729.58'
T = 253.98'
L = 507.62'
E = 5.63'
PC = 898+80.74
PT = 903+88.36
V (des) = 55 MPH
e (max) = 0.023
WIDENING = N/A

C75
P.I. STA. 901+20.31
Δ = 10° 30' 46" (RT)
Dc = 8° 00' 00"
R = 716.20'
T = 65.89'
L = 131.41'
E = 3.02'
PCC = 900+54.42
PT = 901+85.83
V (des) = 30 MPH
e (max) = NC
WIDENING = N/A

PLOT.CEL

ms consultants, inc.
msconsultants.com

Ohio DOT Workspace
70\71 East Interchange 2E
www.msconsultants.com

Batchplot Spec: \\msconsultants.com\files\production\03\60\06634_2E\standards\plotdrv\batchplt.spc
Pen Table: N:\03\60\06634_2E\standards\tables\V8i_ms_std_06634_2D_Plan View.tbl
Plot Driver: \\msconsultants.com\files\Standards\ustn\ohdot\v8i\ms\plotting\PDF.pltcfg

34" x 22"

Model: Sheet
Printed: 9/28/2018 @ 11:54:40 AM
File: N:\03\60\06634_2E\roadway\sheets\105322GP020.dgn
View: FENCE_VIEW1
By: hbrendlinger

HORIZONTAL SCALE IN FEET 0 10 20 40

CALCULATED
CHECKED

PLAN - I-70 EASTBOUND
STA. 801+00 TO STA. 806+00

FRA-70-14.54

642
2317

ms consultants, inc.

PLOT.CEL

ms consultants, inc.
msconsultants.com

Ohio DOT Workspace
70\71 East Interchange 2E
www.msconsultants.com

1" 0.5" 0

DGN: ohdot\V8i
PCF: 60-06634_2E_Columbus

Batchplot Spec: \\msconsultants.com\files\production\Q3\60\06634_2E\standards\plotdrv\batchplt.spc
Pen Table: N:\Q3\60\06634_2E\standards\tables\V8i_ms_std_06634_2D_Plan View.tbl
Plot Driver: \\msconsultants.com\files\Standards\ustn\ohdot\v8i\ms\plotting\PDF.pltcfg

34" x 22"

Model: Sheet
Printed: 6/19/2018 @ 8:43:46 AM
File: N:\Q3\60\06634_2E\roadway\sheets\1053226D020.dgn
View: FENCE_VIEW1
By: jdouglas

REF. NO.	SHEET NO.	STATION FROM	STATION TO	SIDE	202 PAVEMENT REMOVED SQ YD	202 CONCRETE BARRIER REMOVED FT	202 WALK REMOVED SQ FT	202 CURB REMOVED FT	202 PIPE REMOVED, 24" AND UNDER FT	202 PIPE REMOVED, OVER 24" FT	202 GUARDRAIL REMOVED FT	202 MANHOLE REMOVED EACH	202 CATCH BASIN REMOVED EACH	202 INLET REMOVED EACH	202 INLET ABANDONED EACH	202 FENCE REMOVED FT	202 GATE REMOVED EACH	202 VALVE BOX REMOVED EACH	512 SEALING OF CONCRETE SURFACES SQ YD	608 4" CONCRETE WALK SQ FT	608 8" CONCRETE WALK SQ FT	609 CURB, MISC.: COLUMBUS 18" CONCRETE CURB, AS PER PLAN FT	252 FULL DEPTH PAVEMENT SAWING FT	202 REMOVAL MISC.: VACANT AEP CONDUIT BANK REMOVED FT	
		RAMP Q3 - (Q3) MOOBERRY ST. (MOOB) I-70 - (I70)																							
R1	642	900+80.00 (MOOB)	901+23.65 (MOOB)	LT				88																	
R2	642	900+80.00 (MOOB)	904+10.00 (MOOB)	RT			1690																		
R3	642	801+00.00 (I70)	804+50.08 (I70)	RT				351																	
R4	642	801+00.00 (I70)	803+24.82 (I70)	RT							225														
R5	642	901+00.00 (Q3)	906+00.00 (Q3)	RT				500																	
R6	642	901+96.56 (Q3)	904+49.34 (Q3)	RT							253														
R7	642	900+80.00 (MOOB)	904+10.00 (MOOB)	LT				340																	
R8	642	900+80.00 (MOOB)	904+10.00 (MOOB)	RT				329																	
R9	642	900+80.00 (MOOB)	904+51.08 (MOOB)	R/L	1138																				
R10	642	900+80.24 (MOOB)	903+90.00 (MOOB)	LT												300	1								
R11	642	803+05.86 (I70)	806+00.00 (I70)	L/R		295																			
R12	642	803+97.78 (I70)	806+00.00 (I70)	RT		202																			
R13	642	901+00.00 (Q3)	906+00.00 (Q3)	L/R						500		3													
R14	642	901+47.23 (Q3)	902+18.81 (Q3)	L/R					105					1											
R15	642	902+10.64 (Q3)	902+18.81 (Q3)	RT					80					1	1										
R16	642	903+43.42 (Q3)	903+44.56 (Q3)	L/R					89				1	1											
R17	642	803+19.07 (I70)	803+69.87 (I70)	RT					27				1												
R18	642	901+08.83 (MOOB)		RT														1							
R19	642	904+10.00 (MOOB)		LT/RT																			36		
R20	642	900+94.00 (MOOB)	902+84.00 (MOOB)	LT/RT																				191	
C1	642	900+80.00 (MOOB)	904+10.00 (MOOB)	RT																		329			
C2	642	900+88.87 (MOOB)	904+10.00 (MOOB)	LT																		325			
SW1	642	900+80.00 (MOOB)	904+10.00 (MOOB)	RT																1850	141				
S1	642	801+03.10 (I70)	806+00.00 (I70)	CL															593						
S2	642	901+02.01 (Q3)	901+25.14 (Q3)	LT															29						
S3	642	901+42.49 (Q3)	906+00.00 (Q3)	RT															410						
TOTALS CARRIED TO SUB-SUMMARY					1138	497	1690	1608	301	500	478	3	2	3	1	300	1	1	1032	1850	141	654	36	191	

CALCULATED JAP
CHECKED TAZ

ESTIMATED QUANTITIES

FRA-70-14.54

643
2317

ms consultants, inc.

PLOT.CEL

ms consultants, inc.
msconsultants.com

www.msconsultants.com
Ohio DOT Workspace
70\71 East Interchange 2E

1" 0.5" 0

Batchplot Spec: \\msconsultants.com\files\production\03\60\06634_2E\standards\plotdrv\batchplt.spc
Pen Table: N:\03\60\06634_2E\standards\tables\V8i_ms_std_06634_2D_Plan View_NoClouds.tbl
Plot Driver: \\msconsultants.com\files\Standards\ustn\ohdot\v8i\ms\plotting\PDF.pltcfg
PDF: ohdot\V8i
PID#: 60-06634_2E_Columbus

Model: Sheet
Printed: 10/24/2018 @ 1:42:07 PM
File: N:\03\60\06634_2E\roadway\sheets\1053226002OA.dgn
View: FENCE_VIEW1
By: hbrendinger

34" x 22"

REF. NO.	SHEET NO.	STATION FROM	STATION TO	SIDE		670 DITCH EROSION PROTECTION MAT, TYPE B SQ YD	622 CONCRETE BARRIER, SINGLE SLOPE, TYPE C1 FT	622 CONCRETE BARRIER, SINGLE SLOPE, TYPE B1 FT	622 CONCRETE BARRIER, SINGLE SLOPE, TYPE C FT	622 CONCRETE BARRIER, SINGLE SLOPE, TYPE D FT	622 CONCRETE BARRIER, SINGLE SLOPE, TYPE D, AS PER PLAN "A" FT	622 CONCRETE BARRIER, END ANCHORAGE, REINFORCED, TYPE B1 EACH	622 CONCRETE BARRIER, END ANCHORAGE, REINFORCED, TYPE C EACH	622 CONCRETE BARRIER, END ANCHORAGE, REINFORCED, TYPE D EACH	626 BARRIER REFLECTOR, TYPE 1, BI-DIRECTIONAL EACH
		RAMP Q3 - (Q3) I-70 - (I70)													
E1	642	902+43.37 (MOOB)	903+93.02 (MOOB)	LT		125									
B1	642	801+03.10 (I70)	801+76.99 (I70)	CL			59					1			5
B2	642	801+86.99 (I70)	802+96.60 (I70)	CL				80				2			10
B3	642	804+37.94 (I70)	805+05.61 (I70)	LT							68				3
B4	642	804+37.94 (I70)	805+05.61 (I70)	RT							68				1
B5	642	805+05.61 (I70)	805+39.80 (I70)	CL				4				2			2
B6	642	805+49.80 (I70)	805+90.00 (I70)	CL				10				2			3
B7	642	901+02.01 (Q3)	901+25.14 (Q3)	LT					8				1		1
B8	642	901+42.49 (Q3)	902+88.54 (Q3)	RT						115				2	2
B9	642	903+08.66 (Q3)	904+07.90 (Q3)	RT						69				2	2
B10	642	904+27.90 (Q3)	906+00.00 (Q3)	RT						157				1	2
B11	642	803+16.61 (I70)	804+37.94 (I70)	CL				91				2			4
TOTALS CARRIED TO SUB-SUMMARY						125	59	185	8	341	136	9	1	5	35

CALCULATED JAP
CHECKED TAZ

ESTIMATED QUANTITIES

FRA-70-14.54

644
2317

PLOT.CEL

ms consultants, inc.
msconsultants.com

www.msconsultants.com
Ohio DOT Workspace
70\71 East Interchange 2E

1" 0.5" 0

ODF: ohdot\V8i
PCF: 60-06634_2E_Columbus

34" x 22"

Batchplot Spec: \\msconsultants.com\files\production\Q3\60\06634_2E\standards\plotdrv\batchplt.spc
Pen Table: N:\Q3\60\06634_2E\standards\tables\V8i_ms_std_06634_2D_Plan View.tbl
Plot Driver: \\msconsultants.com\files\Standards\ustn\ohdot\v8i\ms\plotting\PDF.pltcfg

Model: Sheet
Printed: 6/19/2018 @ 8:44:13 AM
File: N:\Q3\60\06634_2E\roadway\sheets\Q53260002DB.dgn
View: FENCE_VIEW1
By: jdougas

REF. NO.	SHEET NO.	STATION FROM	STATION TO	SIDE	611 6" CONDUIT, TYPE B FT	611 12" CONDUIT, TYPE B, AS PER PLAN FT	611 12" CONDUIT, TYPE C, AS PER PLAN FT	611 15" CONDUIT, TYPE B FT	611 42" CONDUIT, TYPE B FT	611 CONDUIT, MISC: 12" C900 PIPE, CLASS 150, DR18, TYPE B, AS PER PLAN FT	611 CONDUIT, MISC: 18" C905 PIPE, CLASS 235, DR18, TYPE B, AS PER PLAN FT	611 INLET, NO. 3 FOR SINGLE SLOPE BARRIER, TYPE B EACH	611 INLET, MISC.: CITY OF COLUMBUS DOUBLE CURB AND GUTTER INLET EACH	611 CATCH BASIN, NO. 8 EACH	611 INLET, NO. 3 FOR SINGLE SLOPE BARRIER, TYPE D EACH	611 MANHOLE, NO. 3, AS PER PLAN EACH	611 MANHOLE, MISC.: CITY OF COLUMBUS, MANHOLE, TYPE C EACH	611 MANHOLE ADJUSTED TO GRADE EACH	839 TRENCH DRAIN WITH STANDARD GRATE FT	SPECIAL INLET, MISC.: CITY OF COLUMBUS 60" CURB INLET EACH
		RAMP Q3 - (Q3) MOOBERRY ST. - (MOOB)																			
D1	642	901+43.29 (Q3)	901+97.75 (Q3)	LT	25																
D2	642	902+98.60 (Q3)	902+97.75 (Q3)	L/R				53							1					130	
D3	642	902+97.75 (Q3)	904+17.90 (Q3)	LT					120							1					
D4	642	904+17.90 (Q3)	904+17.90 (Q3)	L/R				50							1						
D5	642, 646	904+17.90 (Q3)	906+73.09 (Q3)	LT					255							1					
D6	642	803+06.59 (I70)	802+99.14 (I70)	RT				62				1									
D7	642	901+05.18 (MOOB)	900+94.22 (MOOB)	LT		20							1								
D8	642	900+93.46 (MOOB)	900+94.22 (MOOB)	L/R		23							1								
D9	642	901+93.18 (MOOB)	900+94.22 (MOOB)	LT							100							1			
D10	642	901+93.59 (MOOB)	901+93.18 (MOOB)	RT		18															1
D11	642	901+93.59 (MOOB)	901+93.18 (MOOB)	LT		18							1								
D12	642	902+83.41 (MOOB)	901+93.18 (MOOB)	LT						90								1			
D13	642	902+81.19 (MOOB)	902+83.41 (MOOB)	LT		18							1								
D14	642	902+85.37 (MOOB)	902+83.41 (MOOB)	RT		18															1
D15	642	903+50.08 (MOOB)	902+83.41 (MOOB)	LT						67								1			
D16	642	903+50.08 (MOOB)	903+50.08 (MOOB)	LT		19							1								
D17	642	903+50.19 (MOOB)	903+50.08 (MOOB)	LT		15												1			
D18	642	904+00.00 (MOOB)	903+50.19 (MOOB)	LT			52								1						
D19	642	904+05.37 (MOOB)	903+50.08 (MOOB)	LT						55								1			
D20	642	903+96.00 (MOOB)	904+05.37 (MOOB)	LT		21							1								
D21	642	904+04.98 (MOOB)	904+05.37 (MOOB)	RT		17															1
SA1	642	902+59.45 (MOOB)		RT															1		
TOTALS CARRIED TO SUB-SUMMARY					25	187	52	165	375	212	100	1	6	1	2	2	5	1	130	3	

CALCULATED JAP
CHECKED TAZ

ESTIMATED QUANTITIES

FRA-70-14.54

645
2317

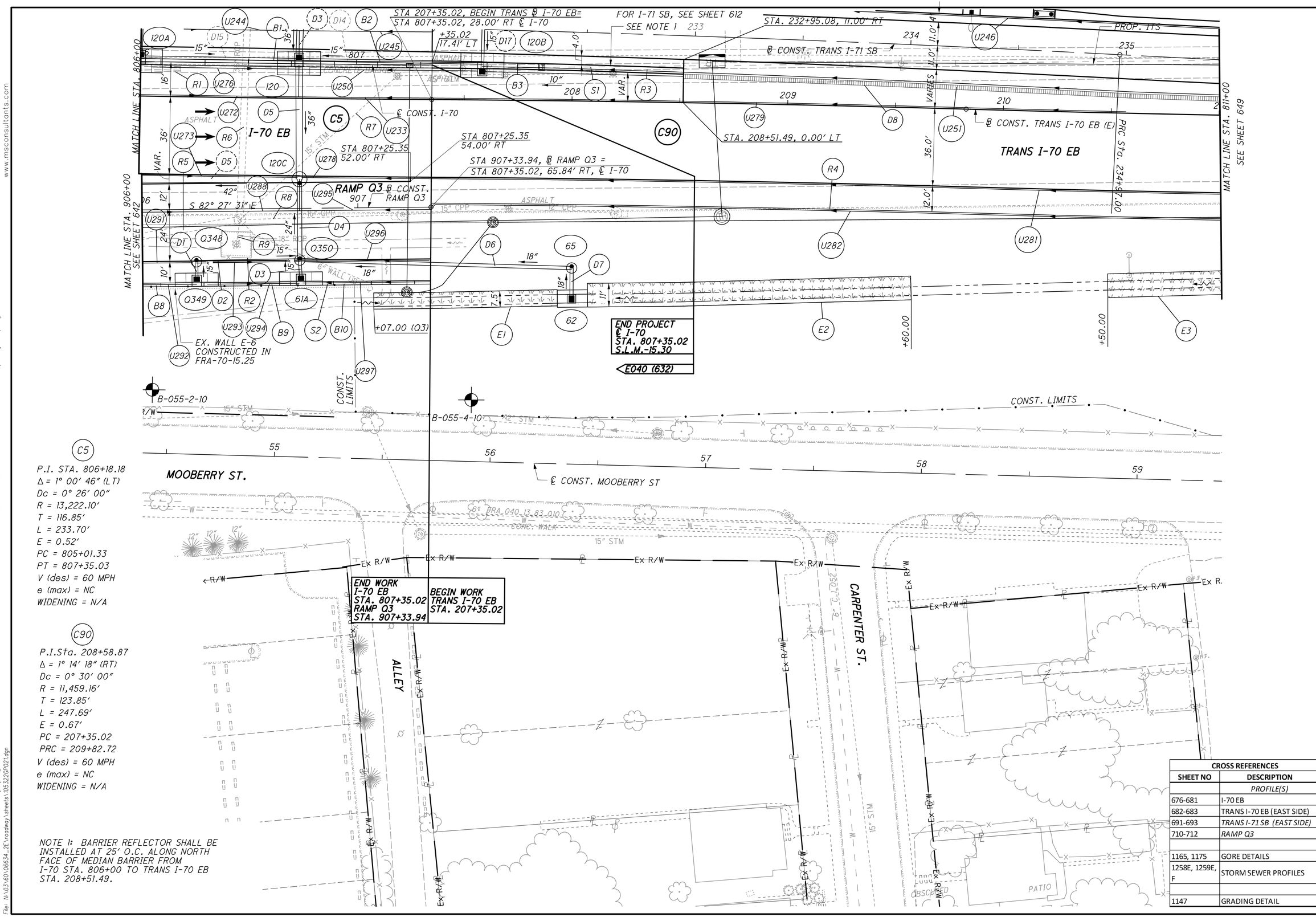

C5

P.I. STA. 806+18.18
Δ = 1° 00' 46" (LT)
Dc = 0° 26' 00"
R = 13,222.10'
T = 116.85'
L = 233.70'
E = 0.52'
PC = 805+01.33
PT = 807+35.03
V (des) = 60 MPH
e (max) = NC
WIDENING = N/A

C90

P.I.Sta. 208+58.87
Δ = 1° 14' 18" (RT)
Dc = 0° 30' 00"
R = 11,459.16'
T = 123.85'
L = 247.69'
E = 0.67'
PC = 207+35.02
PRC = 209+82.72
V (des) = 60 MPH
e (max) = NC
WIDENING = N/A

NOTE 1: BARRIER REFLECTOR SHALL BE INSTALLED AT 25' O.C. ALONG NORTH FACE OF MEDIAN BARRIER FROM I-70 STA. 806+00 TO TRANS I-70 EB STA. 208+51.49.

CROSS REFERENCES	
SHEET NO	DESCRIPTION
	PROFILE(S)
676-681	I-70 EB
682-683	TRANS I-70 EB (EAST SIDE)
691-693	TRANS I-71 SB (EAST SIDE)
710-712	RAMP Q3
1165, 1175	GORE DETAILS
1258E, 1259E, F	STORM SEWER PROFILES
1147	GRADING DETAIL

HORIZONTAL SCALE IN FEET 0 10 20 40

CALCULATED

CHECKED

PLAN - I-70 EASTBOUND
STA. 806+00 TO STA. 811+00

FRA-70-14.54

646
2317

PLOT.CEL
ms consultants, inc.
msconsultants.com
Ohio DOT Workspace
70\71 East Interchange 2E
www.msconsultants.com
Batchplot Spec: \\msconsultants.com\files\production\03\60\06634_2E\standards\plotdrv\batchplt.spc
Pen Table: N:\03\60\06634_2E\standards\tables\V8i_ms_std_06634_2D_Plan View.tbl
Plot Driver: \\msconsultants.com\files\Standards\ustn\ohdot\v8i\ms\plotting\PDF.pltcfg
34" x 22"
Model: Sheet
Printed: 6/19/2018 @ 8:44:42 AM
File: N:\03\60\06634_2E\roadway\sheets\105322GP021.dgn
View: FENCE_VIEW1
By: jdouglas
ms consultants, inc.

PLOT.CEL
ms consultants, inc.
rmsconsultants.com
www.rmsconsultants.com
Ohio DOT Workspace
70\71 East Interchange 2E
1" 0.5" 0
Batchplot Spec: \\rmsconsultants.com\files\production\03\60\06634_2E\standards\plotdrv\batchplt.spc
Pen Table: N:\03\60\06634_2E\standards\tables\V8i_ms_std_06634_2D_Plan View_NoClouds.tbl
Plot Driver: \\rmsconsultants.com\files\standards\ustn\ohdot\v8i\ms\plotting\PDF.pltcfg
PLOT: ohdot\V8i
PLOT: 60-06634_2E_Columbus
34" x 22"
Model: Sheet
Printed: 10/24/2018 @ 1:42:19 PM
File: N:\03\60\06634_2E\roadway\sheets\1053226002021.dgn
View: FENCE_VIEW1
By: hbrendinger

REF. NO.	SHEET NO.	STATION FROM	STATION TO	SIDE	202 CONCRETE BARRIER REMOVED FT	202 CURB REMOVED FT	202 PIPE REMOVED, 24" AND UNDER FT	202 PIPE REMOVED, OVER 24" FT	202 MANHOLE REMOVED EACH	202 CATCH BASIN REMOVED EACH	202 INLET REMOVED EACH	202 FENCE REMOVED FT		512 SEALING OF CONCRETE SURFACES SQ YD		622 CONCRETE BARRIER, SINGLE SLOPE, TYPE B1 FT		622 CONCRETE BARRIER, SINGLE SLOPE, TYPE D FT	622 CONCRETE BARRIER, END ANCHORAGE, REINFORCED, TYPE B1 EACH		622 CONCRETE BARRIER, END ANCHORAGE, REINFORCED, TYPE D EACH	626 BARRIER REFLECTOR, TYPE 1, BI-DIRECTIONAL EACH		670 DITCH EROSION PROTECTION MAT, TYPE B SQ YD	
		RAMP Q3 - (Q3) I-70 - (I70) TRANSITIONAL I-70 EB - (T70EB)																							
R1	646	806+00.00 (I70)	806+18.57 (I70)	LT	37																				
R2	646	906+36.47 (Q3)	906+51.05 (Q3)	RT								52													
R3	646	806+18.57 (I70)	211+00.88 (T70EB)	L/R	481																				
R4	646	906+00.00 (Q3)	210+99.87 (T70EB)	RT		500																			
R5	646	906+00.00 (Q3)	906+45.30 (Q3)	RT				46	1																
R6	646	906+45.30 (Q3)	906+48.73 (Q3)	R/L				73																	
R7	646	906+45.30 (Q3)	208+19.09 (T70EB)	R/L			199				3														
R8	646	906+45.30 (Q3)	208+20.52 (T70EB)	R/L			175			1	2														
R9	646	906+43.56 (Q3)	906+45.30 (Q3)	RT			11			1															
B1	646	806+10.00 (I70)	806+63.35 (I70)	CL												23				2			4		
B2	646	806+83.35 (I70)	207+48.32 (TI70EB)	CL/LT												35				2			7		
B3	646	207+68.30 (T70EB)	207+51.49 (T70EB)	LT												68				2			4		
B8	646	906+00.00 (Q3)	906+15.00 (Q3)	RT																		1			
B9	646	906+35.00 (Q3)	906+63.35 (Q3)	RT																		2	1		
B10	646	906+83.35 (Q3)	907+33.36 (Q3)	RT														20				2	1		
E1	646	807+09.00 (I70)	807+93.35 (I70)	RT																				71	
E2	646	808+07.24 (I70)	809+56.00 (I70)	RT																				183	
E3	646	210+50.00 (T70EB)	211+00.00 (T70EB)	RT																				122	
S1	646	806+00.00 (I70)	207+51.49 (T70EB)	CL/LT										301											
S2	646	906+00.00 (Q3)	907+33.36 (Q3)	RT										120											
TOTALS CARRIED TO SUB-SUMMARY					518	500	385	119	1	2	5	52		421		126		20	6		5	17		376	

CALCULATED JAP
CHECKED TAZ

ESTIMATED QUANTITIES

FRA-70-14.54

647
2317

ms consultants, inc.

PLOT.CEL
ms consultants, inc.
msconsultants.com
www.msconsultants.com
Ohio DOT Workspace
70\71 East Interchange 2E
1" 0.5" 0
PDF: ohdot\V8i
PCF: 60-06634_2E_Columbus
Batchplot Spec: \\msconsultants.com\files\production\Q3\60\06634_2E\standards\plotdrv\batchplt.spc
Pen Table: N:\03\60\06634_2E\standards\tables\V8i_ms_std_06634_2D_Plan View.tbl
Plot Driver: \\msconsultants.com\files\Standards\ustn\ohdot\v8i\ms\plotting\PDF.pltcfg
Model: Sheet
Printed: 6/19/2018 @ 8:44:57 AM
File: N:\03\60\06634_2E\roadway\sheets\1053220021A.dgn
View: FENCE_VIEW1
By: jdougas
34" x 22"

REF. NO.	SHEET NO.	STATION FROM	STATION TO	SIDE	611 10" CONDUIT, TYPE B FT	611 15" CONDUIT, TYPE B FT	611 18" CONDUIT, TYPE B FT	611 18" CONDUIT, TYPE C FT	611 24" CONDUIT, TYPE B FT	611 36" CONDUIT, TYPE B FT	611 TRENCH DRAIN WITH STANDARD GRATE FT	611 CATCH BASIN, NO. 8 EACH	611 INLET, NO. 3 FOR SINGLE SLOPE BARRIER, TYPE D EACH	611 INLET, NO. 3 FOR SINGLE SLOPE BARRIER, TYPE B1 EACH	611 MANHOLE, NO. 3 EACH	611 MANHOLE, NO. 3, AS PER PLAN EACH
		RAMP Q3 - (Q3) TRANSITIONAL INTERSTATE 70 - (T70) TRANSITIONAL RAMP P2 - (TP2) INTERSTATE 70 - (I70) TRANSITIONAL INTERSTATE 70 - (T70EB)														
D1	646	906+25.00 (Q3)	906+25.00 (Q3)	RT		9							1			
D2	646	906+25.00 (Q3)	906+72.87 (Q3)	RT		48										1
D3	646	906+73.35 (Q3)	906+72.87 (Q3)	RT		9							1			
D4	646	906+72.87 (Q3)	906+73.09 (Q3)	L/R					37							1
D5	646	806+73.35 (I70)	906+73.09 (Q3)	L/R						55				1		
D6	646	208+00.02 (T70)	906+72.87 (Q3)	RT			126								1	
D7	646	207+99.96 (T70)	208+00.02 (T70)	RT				14				1				
D8	646	212+88.27 (T70EB)	207+58.32 (T70EB)	RT	93						437					
TOTALS CARRIED TO SUB-SUMMARY					93	66	126	14	37	55	437	1	2	1	1	2

CALCULATED JAP
CHECKED TAZ

ESTIMATED QUANTITIES

FRA-70-14.54

ms consultants, inc.

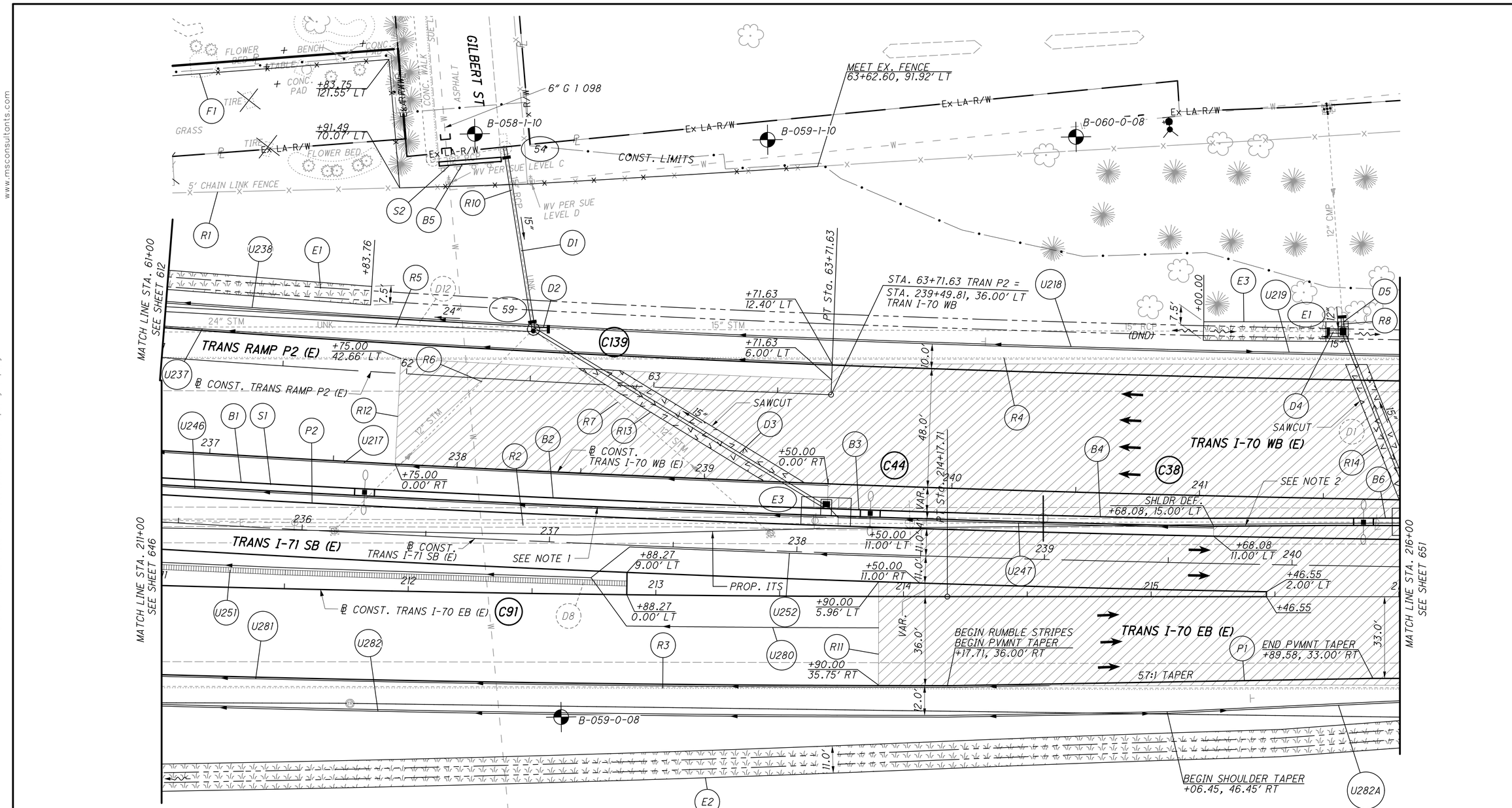

NOTE 1: BARRIER REFLECTOR SHALL BE INSTALLED AT 25' O.C. ALONG SOUTH FACE OF MEDIAN BARRIER FROM TRANS I-71 SB STA 235+43.07 TO STA 240+42.90

NOTE 2: PROPOSED MEDIAN BARRIER SHALL MATCH THE LOCATION OF THE EXISTING MEDIAN BARRIER STARTING AT TRANS. I-71 SB STA. 239+68.08, AND PROCEEDING EAST. HOLD TO THE EXISTING SOUTH BARRIER FACE, WHERE THE BARRIER AND PAVEMENT MEET.

CROSS REFERENCES	
SHEET NO	DESCRIPTION
	PROFILE(S)
682-683	TRANS I-70 EB (EAST SIDE)
688-690	TRANS I-70 WB (EAST SIDE)
691-693	TRANS I-71 SB (EAST SIDE)
1165-1166,1176	GORE DETAILS
1257, 1258C, F	STORM SEWER PROFILES
1148	GRADING DETAIL

C91
P.I.Sta. 212+00.24
Δ = 2° 10' 30" (LT)
Dc = 0° 30' 00"
R = 11,459.16'
T = 217.53'
L = 435.00'
E = 2.06'
PRC = 209+82.72
PT = 214+17.71
V (des) = 60 MPH
e (max) = NC
WIDENING = N/A

C44
P.I.Sta. 238+50.55
Δ = 3° 32' 04" (LT)
Dc = 0° 30' 00"
R = 11,459.16'
T = 353.55'
L = 706.88'
E = 5.45'
PC = 234+97.00
PT = 242+03.88
V (des) = 55 MPH
e (max) = NC
WIDENING = N/A

C38
P.I.Sta. 240+76.87
Δ = 4° 16' 02" (LT)
Dc = 0° 30' 00"
R = 11,459.16'
T = 426.92'
L = 853.45'
E = 7.95'
PRC Sta. 236+49.95
PT Sta. 245+03.39
V (des) = 55 MPH
e (max) = NC
WIDENING = N/A

HORIZONTAL SCALE IN FEET

CALCULATED
CHECKED

PLAN - TRANS I-70 EASTBOUND
STA. 211+00 TO STA. 216+00

FRA-70-14.54

ms consultants, inc.

PLOT.CEL

ms consultants, inc.
msconsultants.com

Ohio DOT Workspace
70\71 East Interchange 2E
www.msconsultants.com

1" 0.5" 0

Batchplot Spec: \\msconsultants.com\files\production\03\60\06634_2E\standards\plotdrv\batchplt.spc
Pen Table: N:\03\60\06634_2E\standards\tables\V8i_ms_std_06634_2D_Plan View_NoClouds.tbl
Plot Driver: \\msconsultants.com\files\standards\ustn\ohdot\v8i\ms\plotting\PDF.pltcfg
PLOT: ohdotV8i
PLOT: 60-06634_2E_Columbus

34" x 22"

Model: Sheet
Printed: 2/12/2019 @ 10:02:22 AM
File: N:\03\60\06634_2E\roadway\sheets\05322600022.dgn
View: FENCE_VIEW1
By: awhite

CALCULATED JAP
CHECKED TAZ

ESTIMATED QUANTITIES

REF. NO.	SHEET NO.	STATION FROM	STATION TO	SIDE	202 PAVEMENT REMOVED SQ YD	253 PAVEMENT REPAIR SQ YD	202 CONCRETE BARRIER REMOVED FT	202 CURB REMOVED FT	202 PIPE REMOVED, 24" AND UNDER FT	611 15" CONDUIT, TYPE C, 706.02 FT	202 FENCE REMOVED FT	202 INLET REMOVED EACH	202 MANHOLE REMOVED EACH	252 FULL DEPTH PAVEMENT SAWING FT	512 SEALING OF CONCRETE SURFACES SQ YD	607 FENCE, TYPE CL FT	618 EDGE LINE, RUMBLE STRIPE (ASPHALT CONCRETE) MILE	622 CONCRETE BARRIER, SINGLE SLOPE, TYPE C1 FT	622 CONCRETE BARRIER, END ANCHORAGE, REINFORCED, TYPE C1 EACH	622 CONCRETE BARRIER, SINGLE SLOPE, TYPE D FT	626 BARRIER REFLECTOR, TYPE 1, BI-DIRECTIONAL EACH	670 DITCH EROSION PROTECTION MAT, TYPE B SQ YD	611 CATCH BASIN, NO. 8 EACH	611 12" CONDUIT, TYPE C FT	611 15" CONDUIT, TYPE C FT	611 INLET, NO. 3 FOR SINGLE SLOPE BARRIER, TYPE C1 EACH	611 15" CONDUIT, TYPE B FT	611 15" CONDUIT, TYPE F FT	611 15" CONDUIT, TYPE B, 706.02 FT
R1	649	60+99.10 (TP2)	63+62.60 (TP2)	LT							264																	
R2	649	211+00.88 (T70EB)	218+78.17 (T70EB)	LT			778																					
R3	649	210+99.87 (T70EB)	215+99.34 (T70EB)	RT				500																				
R4	649	61+00.00 (TP2)	115+99.77 (T70WB)	LT				500																				
R5	649	61+00.00 (TP2)	62+50.24 (TP2)	LT					149				1															
R6	649	237+51.91 (T70WB)	62+50.24 (TP2)	R/L					114			1																
R7	649	62+50.24 (TP2)	239+27.53 (T70WB)	R/L					126			1																
R8	649	241+56.72 (T70WB)		LT					12				1															
R10	649	62+33.59 (TP2)	62+49.18 (TP2)	LT					74																			
R11	649	213+90.00 (T70EB)	216+00.00 (T70EB)	RT/LT										407														
R12	649	237+75.00 (T70WB)	241+79.99 (T70WB)	RT/LT										629														
R13	649	238+47.23 (T70WB)	239+40.48 (T70WB)	LT	78									175														
R14	649,651	241+57.93 (T70WB)	241+92.32 (T70WB)	LT	59									133														
F1	649	61+00.00 (TP2)	63+62.60 (TP2)	LT												309												
B1	649	236+81.21 (T70WB)	237+59.27 (T70WB)	RT														63	1		4							
B2	649	237+67.27 (T70WB)	239+39.59 (T70WB)	RT														142	2		11							
B3	649	239+59.58 (T70WB)	239+63.43 (T70WB)	RT															1									
B4	649	239+71.42 (T70WB)	241+62.40 (T70WB)	RT														161	2		12							
B5	649	62+08.24 (TP2)	62+33.42 (TP2)	LT																25								
B6	649	241+70.40 (T70WB)	241+78.00 (T70WB)	RT															1									
E1	649	61+00.00 (TP2)	61+83.76 (TP2)	LT																		70						
E2	649	211+00.00 (T70EB)	216+00.00 (T70EB)	RT																		611						
E3	649	241+00.00 (T70EB)	241+49.76 (T70EB)	LT																		43						
S1	649	236+81.21 (T70WB)	241+81.10 (T70WB)	LT											705													
S2	649	62+08.24 (TP2)	62+33.42 (TP2)	LT											26													
D1	649	62+33.59 (TP2)	62+50.23 (TP2)	LT																					2		64	
D2	649	62+50.23 (TP2)	62+56.25 (TP2)	LT																								8
D3	649	62+50.23 (TP2)	239+49.58 (T70WB)	LT/RT		78																				1	138	
D4	649	241+50.68 (T70WB)	241+56.72 (T70WB)	LT						8													1					
D5	649	241+56.17 (T70WB)	241+56.72 (T70WB)	LT																				6				
P1	649	214+17.71 (T70EB)	216+00.00 (T70EB)	RT													0.03											
P2	649	235+43.07 (T71EB)	240+42.90 (T71EB)	LT													0.10											
P3	649	235+43.07 (T71EB)	237+31.84 (T71EB)	RT													0.04											
TOTALS CARRIED TO SUB-SUMMARY					137	78	778	1000	475	8	264	2	2	1344	731	309	0.17	366	7	25	27	724	1	6	2	1	138	64	8

FRA-70-14.54

650
2317

CROSS REFERENCES	
SHEET NO	DESCRIPTION
	PROFILE(S)
682-683	TRANS I-70 EB (EAST SIDE)
688-690	TRANS I-70 WB (EAST SIDE)
691-693	TRANS I-71 SB (EAST SIDE)
1257	STORM SEWER PROFILES
1148	GRADING DETAIL

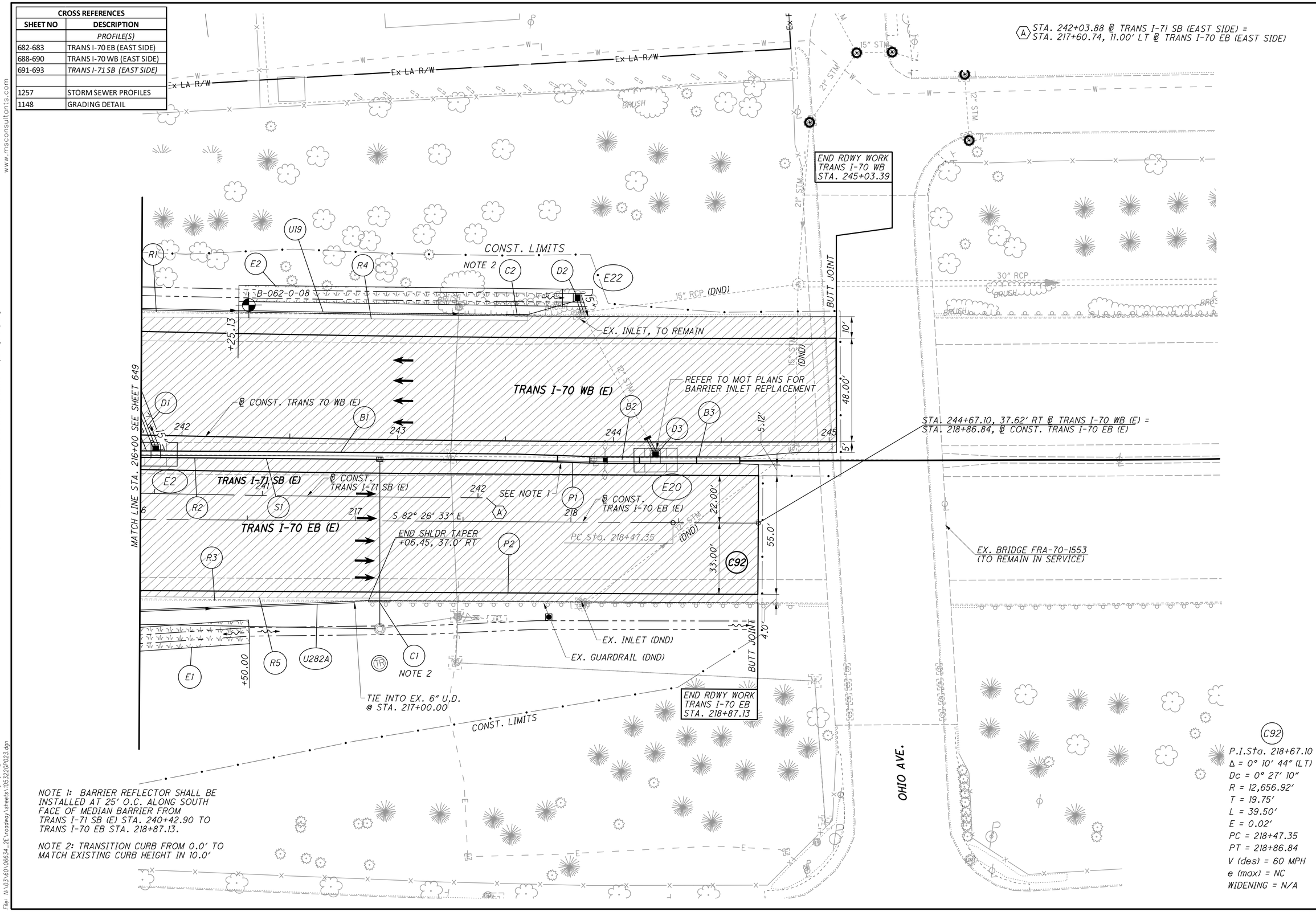

NOTE 1: BARRIER REFLECTOR SHALL BE INSTALLED AT 25' O.C. ALONG SOUTH FACE OF MEDIAN BARRIER FROM TRANS I-71 SB (E) STA. 240+42.90 TO TRANS I-70 EB STA. 218+87.13.

NOTE 2: TRANSITION CURB FROM 0.0' TO MATCH EXISTING CURB HEIGHT IN 10.0'

C92

P.I.Sta. 218+67.10
Δ = 0° 10' 44" (LT)
Dc = 0° 27' 10"
R = 12,656.92'
T = 19.75'
L = 39.50'
E = 0.02'
PC = 218+47.35
PT = 218+86.84
V (des) = 60 MPH
e (max) = NC
WIDENING = N/A

HORIZONTAL SCALE IN FEET

CALCULATED

CHECKED

PLAN - I-70 EASTBOUND
STA. 816+00 TO STA. 821+00

FRA-70-14.54

651
2317

PLOT.CEL
ms consultants, inc.
msconsultants.com
Ohio DOT Workspace
70\71 East Interchange 2E
www.msconsultants.com
Batchplot Spec: \\msconsultants.com\files\production\03\60\06634_2E\standards\plotdrv\batchplt.spc
Pen Table: N:\03\60\06634_2E\standards\tables\V8i_ms_std_06634_2D_Plan View.tbl
Plot Driver: \\msconsultants.com\files\Standards\ustn\ohdot\v8i\ms\plotting\PDF.pltcfg
34" x 22"
View: FENCE_VIEW1
By: jdouglas
Model: Sheet
Printed: 6/19/2018 @ 8:45:50 AM
File: N:\03\60\06634_2E\roadway\sheets\105322GP023.dgn
ms consultants, inc.

PLOT.CEL

ms consultants, inc.
msconsultants.com

www.msconsultants.com
Ohio DOT Workspace
70\71 East Interchange 2E

1" 0.5" 0

Batchplot Spec: \\msconsultants.com\Files\production\03\60\06634_2E\standards\plotdrv\batchplt.spc
Pen Table: N:\03\60\06634_2E\standards\tables\V8i_ms_std_06634_2D_Plan View_NoClouds.tbl
Plot Driver: \\msconsultants.com\Files\Standards\usetn\ohdot\v8i\ms\plotting\PDF.pltcfg
PDF: ohdot\V8i
PDF: 60-06634_2E_Columbus

34" x 22"

Model: Sheet
Printed: 2/12/2019 @ 10:02:32 AM
File: N:\03\60\06634_2E\roadway\sheets\1053220023.dgn
View: FENCE_VIEW1
By: awhite

REF. NO.	SHEET NO.	STATION FROM	STATION TO	SIDE	202 CONCRETE BARRIER REMOVED FT	202 CURB REMOVED FT	252 FULL DEPTH PAVEMENT SAWING FT	609 CURB, TYPE 4-C FT	512 SEALING OF CONCRETE SURFACES SY	618 EDGE LINE, RUMBLE STRIPE (ASPHALT CONCRETE) MILE	253 PAVEMENT REPAIR SQ YD		622 CONCRETE BARRIER, SINGLE SLOPE, TYPE B1 FT			622 BARRIER TRANSITION EACH	622 CONCRETE BARRIER, END ANCHORAGE, REINFORCED, TYPE B1 EACH	626 BARRIER REFLECTOR, TYPE 1, BI-DIRECTIONAL EACH	611 12" CONDUIT, TYPE B FT		611 INLET, NO. 3 FOR SINGLE SLOPE BARRIER, TYPE B1 EACH	611 15" CONDUIT, TYPE B FT	611 CATCH BASIN, NO. 8 EACH	611 15" CONDUIT, TYPE C FT	670 DITCH EROSION PROTECTION MAT, TYPE B SY	
		TRANSITIONAL I-70 WB - (T70WB) TRANSITIONAL I-71SB - (T71SB) TRANSITIONAL I-70 EB - (T70EB)																								
R1	651	241+79.95 (T70WB)	243+59.89 (T70WB)	LT		179																				
R2	651	216+00.45 (T70EB)	218+78.17 (T70EB)	LT	278																					
R3	651	216+00.47 (T70EB)	217+16.45 (T70EB)	RT		116																				
R4	651	241+79.99 (T70WB)	243+59.89 (T70WB)	LT			181																			
R5	651	216+00.00 (T70EB)	217+16.45 (T70EB)	RT			118																			
B1	651	216+17.35 (T70EB)	218+08.56 (T70EB)	LT													2	12								
B2	651	218+16.62 (T70EB)	218+29.08 (T70EB)	LT									161				1	2								
B3	651	218+49.08 (T70EB)	218+78.17 (T70EB)	LT												1	1	2								
S1	651	216+00.45 (T70EB)	218+78.17 (T70EB)	LT					331																	
C1	651	217+06.45 (T70EB)	217+16.45 (T70EB)	RT				10																		
C2	651	243+49.84 (T70WB)	243+59.89 (T70WB)	LT				10																		
D1	651	241+56.72 (T70WB)	241+87.97 (T70WB)	L/R							59										1	81				
D2	651	243+83.01 (T70WB)		LT																			1	7		
D3	651	244+19.55 (T70WB)		RT																8	1					
E1	651	216+00.00 (T70EB)	216+50.00 (T70EB)	RT																					62	
E2	651	242+25.13 (T70WB)	243+75.97 (T70WB)	LT																					129	
P1	651	240+42.90 (T71SB)	218+86.84 (T70EB)	LT						0.05																
P2	651	216+00.00 (T70EB)	218+86.84 (T70EB)	RT						0.05																
TOTALS CARRIED TO SUB-SUMMARY					278	295	299	20	331	0.10	59		161			1	4	16	8		2	81	1	7	191	

CALCULATED JAP
CHECKED TAZ

ESTIMATED QUANTITIES

FRA-70-14.54

652
2317

PLOT.CEL

ms consultants, inc.
msconsultants.com

www.msconsultants.com
Ohio DOT Workspace
70\71 East Interchange 2E

PDF: ohdot\V8i
PCF: 60-06634_2E_Columbus

Batchplot Spec: \\msconsultants.com\Files\production\Q3\60\06634_2E\standards\plotdr\batchplt.spc
Pen Table: N:\Q3\60\06634_2E\standards\tables\V8i_ms_std_06634_2D_Plan View.tbl
Plot Driver: \\msconsultants.com\Files\Standards\ustn\ohdot\v8i\ms\plotting\PDF.pltcfg

Model: Sheet
Printed: 6/19/2018 @ 8:46:19 AM
File: N:\Q3\60\06634_2E\roadway\sheets\105322GP024.dgn
View: FENCE_VIEW1
By: jdouglas

34" x 22"

CROSS REFERENCES	
SHEET NO	DESCRIPTION
	PROFILE(S)
713-715	TRANS I-71 SB (WEST SIDE)
1135	PAVEMENT DETAIL
1257B	STORM SEWER PROFILES
1149	GRADING DETAIL

C66

P.I.Sta. 985+52.46
Δ = 47° 17′ 36″ (LT)
Dc = 5° 30′ 00″
R = 1,041.74′
T = 456.14′
L = 859.88′
E = 95.49′
SC = 980+96.33
CS = 989+56.21
V (des) = 55 MPH
e (max) = 0.060
WIDENING = 2.75′

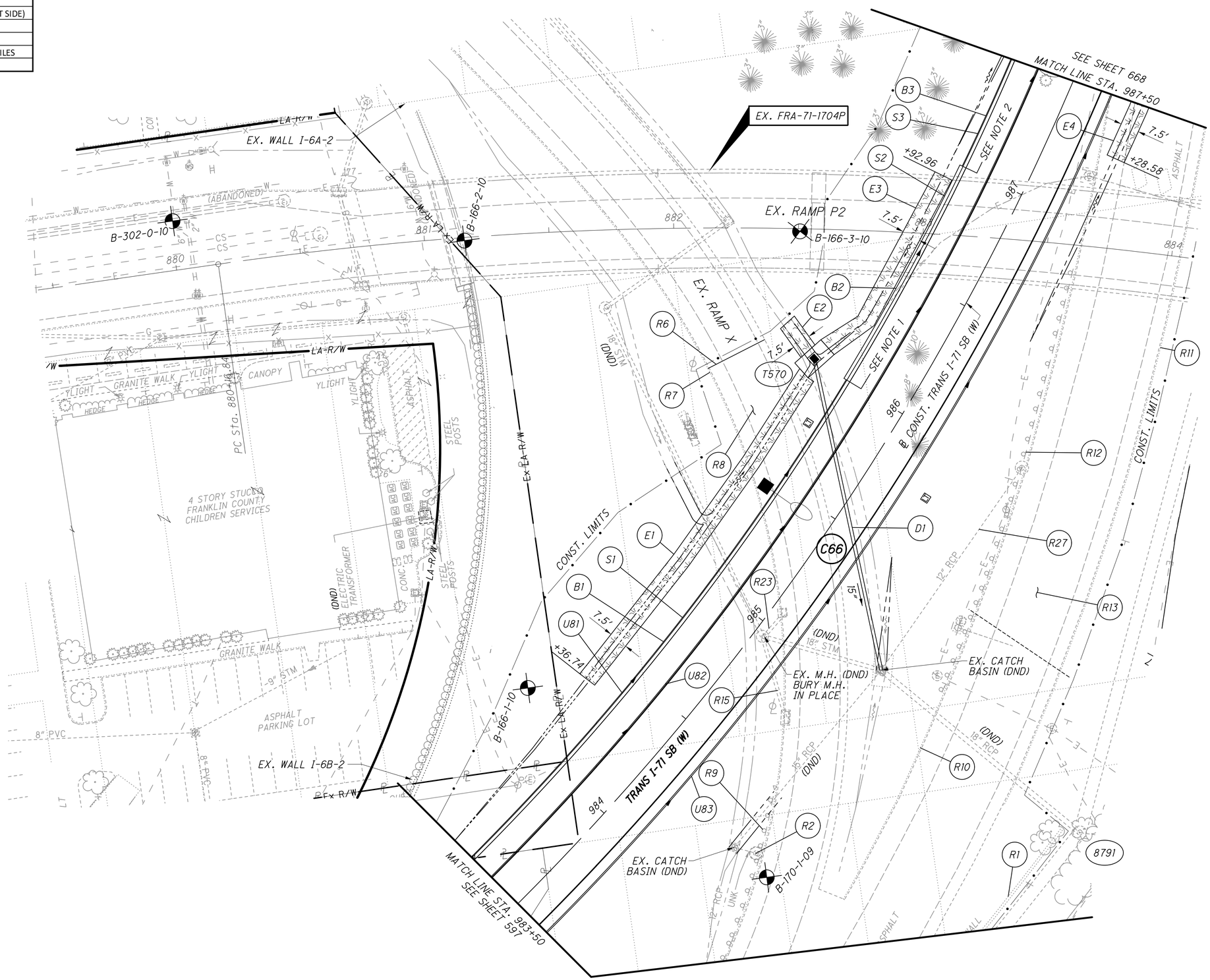

NOTE:

1. +00.00, 24.75′ LT.
   END "D" BARRIER
   BEGIN "C" BARRIER
2. +00.00, 24.75′ LT.
   END "C" BARRIER
   RESUME "D" BARRIER

HORIZONTAL SCALE IN FEET
0 10 20 40

CALCULATED
CHECKED

TRANS RAMP I-71 SB (WEST SIDE)
STA. 983+50 TO STA. 987+50

FRA-70-14.54

658
2317

ms consultants, inc.

PLOT.CEL

ms consultants, inc.
msconsultants.com

Ohio DOT Workspace
70\71 East Interchange 2E
www.msconsultants.com

Batchplot Spec: \\msconsultants.com\files\production\03\60\06634_2E\standards\plotdrv\batchplt.spc
Pen Table: N:\03\60\06634_2E\standards\tables\V8i_ms_std_06634_2D_Plan View_NoClouds.tbl
Plot Driver: \\msconsultants.com\files\Standards\ustn\ohdot\v8i\ms\plotting\PDF.pltcfg
PCF: ohdotV8i
PCF: 60-06634_2E_Columbus

34" x 22"

View: FENCE_VIEW1
By: hbrendlinger
Model: Sheet
Printed: 10/24/2018 @ 1:42:54 PM
File: N:\03\60\06634_2E\roadway\sheets\105322G0024.dgn

REF. NO.	SHEET NO.	STATION TRANS I-71 SB (T71SB) FROM	TO	SIDE	202 CONCRETE BARRIER REMOVED FT	202 PAVEMENT REMOVED SQ YD		202 CURB REMOVED FT	202 PIPE REMOVED, 24" AND UNDER FT	202 GUARDRAIL REMOVED FT	202 MANHOLE REMOVED EACH	202 CATCH BASIN REMOVED EACH			202 INLET REMOVED EACH		252 FULL DEPTH PAVEMENT SAWING FT		512 SEALING OF CONCRETE SURFACES SQ YD	622 CONCRETE BARRIER, SINGLE SLOPE, TYPE C FT	622 CONCRETE BARRIER, END ANCHORAGE, REINFORCED, TYPE C EACH	622 CONCRETE BARRIER, SINGLE SLOPE, TYPE D FT	622 CONCRETE BARRIER, END ANCHORAGE, REINFORCED, TYPE D EACH	626 BARRIER REFLECTOR, TYPE 1, ONE-WAY EACH	
R1	658	984+58.74 (T71SB)	985+03.96 (T71SB)	RT	51																				
R2	658	984+23.87 (T71SB)	984+28.33 (T71SB)	RT					9						1										
R6	658	985+73.15 (T71SB)	985+96.58 (T71SB)	LT													26								
R7	658	983+89.35 (T71SB)	985+73.15 (T71SB)	L/R				245																	
R8	658	983+89.35 (T71SB)	985+96.58 (T71SB)	L/R		697																			
R9	658	983+89.35 (T71SB)	984+50.69 (T71SB)	RT						71															
R10	658	984+35.84 (T71SB)	987+50.00 (T71SB)	RT				342																	
R11	658	984+98.78 (T71SB)	987+50.00 (T71SB)	RT				284																	
R12	658	985+18.62 (T71SB)	986+82.74 (T71SB)	RT						178															
R13	658	984+22.51 (T71SB)	987+50.00 (T71SB)	RT		965																			
R15	658	984+74.64 (T71SB)	984+94.40 (T71SB)	RT					34						1										
R23	658	984+94.90 (T71SB)	985+07.21 (T71SB)	RT					12			1													
R27	658	985+11.97 (T71SB)	986+06.12 (T71SB)	RT					99						1										
B1	658	983+50.00 (T71SB)	986+00.00 (T71SB)	LT																		229	1	4	
B2	658	986+00.00 (T71SB)	987+00.00 (T71SB)	LT																68	2			3	
B3	658	987+00.00 (T71SB)	987+48.50 (T71SB)	LT																		32	1	1	
S1	658	983+50.00 (T71SB)	986+00.00 (T71SB)	LT															222						
S2	658	986+00.00 (T71SB)	987+00.00 (T71SB)	LT															111						
S3	658	987+00.00 (T71SB)	987+48.50 (T71SB)	LT															42						
TOTALS CARRIED TO SUB-SUMMARY					51	1662		871	154	249		1			3		26		375	68	2	261	2	8	

CALCULATED JAP
CHECKED TAZ

ESTIMATED QUANTITIES

FRA-70-14.54

ms consultants, inc.

PLOT.CEL

ms consultants, inc.
msconsultants.com

www.msconsultants.com
Ohio DOT Workspace
70\71 East Interchange 2E

1" 0.5" 0

ODF: ohdot\V8i
PCF: 60-06634_2E_Columbus

Batchplot Spec: \\msconsultants.com\files\production\03\60\06634_2E\standards\plotdrv\batchplt.spc
Pen Table: N:\03\60\06634_2E\standards\tables\V8i_ms_std_06634_2D_Plan View.tbl
Plot Driver: \\msconsultants.com\files\Standards\ustn\ohdot\v8i\ms\plotting\PDF.pltcfg

Model: Sheet
Printed: 6/19/2018 @ 8:46:35 AM View: FENCE_VIEW1
File: N:\03\60\06634_2E\roadway sheets\053220024A.dgn By: jdouglas

34" x 22"

CALCULATED JAP
CHECKED TAZ

ESTIMATED QUANTITIES

FRA-70-14.54

REF. NO.	SHEET NO.	STATION FROM	STATION TO	SIDE		670 DITCH EROSION PROTECTION MAT, TYPE B SQ YD								611 15" CONDUIT, TYPE B FT					611 CATCH BASIN, NO. 8 EACH						
		RAMP Q1 - (Q1) RAMP Q4 - (Q4) TRANSITIONAL I-71 SB -(T71SB)																							
E1	658	984+36.74 (T71SB)	985+92.41 (T71SB)	LT		125																			
E2	658	985+98.18 (T71SB)	986+05.67 (T71SB)	LT		12																			
E3	658	986+08.87 (T71SB)	986+92.96 (T71SB)	LT		70																			
E4	658	987+28.58 (T71SB)	987+51.57 (T71SB)	RT		20																			
D1	658	986+00.60 (T71SB)	985+11.97 (T71SB)	L/R										128					1						
TOTALS CARRIED TO SUB-SUMMARY						227								128					1						

PLOT.CEL

ms consultants, inc.
msconsultants.com

CROSS REFERENCES	
SHEET NO	DESCRIPTION
	PROFILE(S)
709	TRANS RAMP N4

C49

P.I.Sta. 693+41.87
Δ = 8° 25′ 09″ (LT)
Dc = 5° 30′ 00″
R = 1,041.74′
T = 76.68′
L = 153.08′
E = 2.82′
PC = 692+65.20
PT = 694+18.27
V (des) = 45 MPH
e (max) = 0.070 (MATCH EX.)
WIDENING = N/A

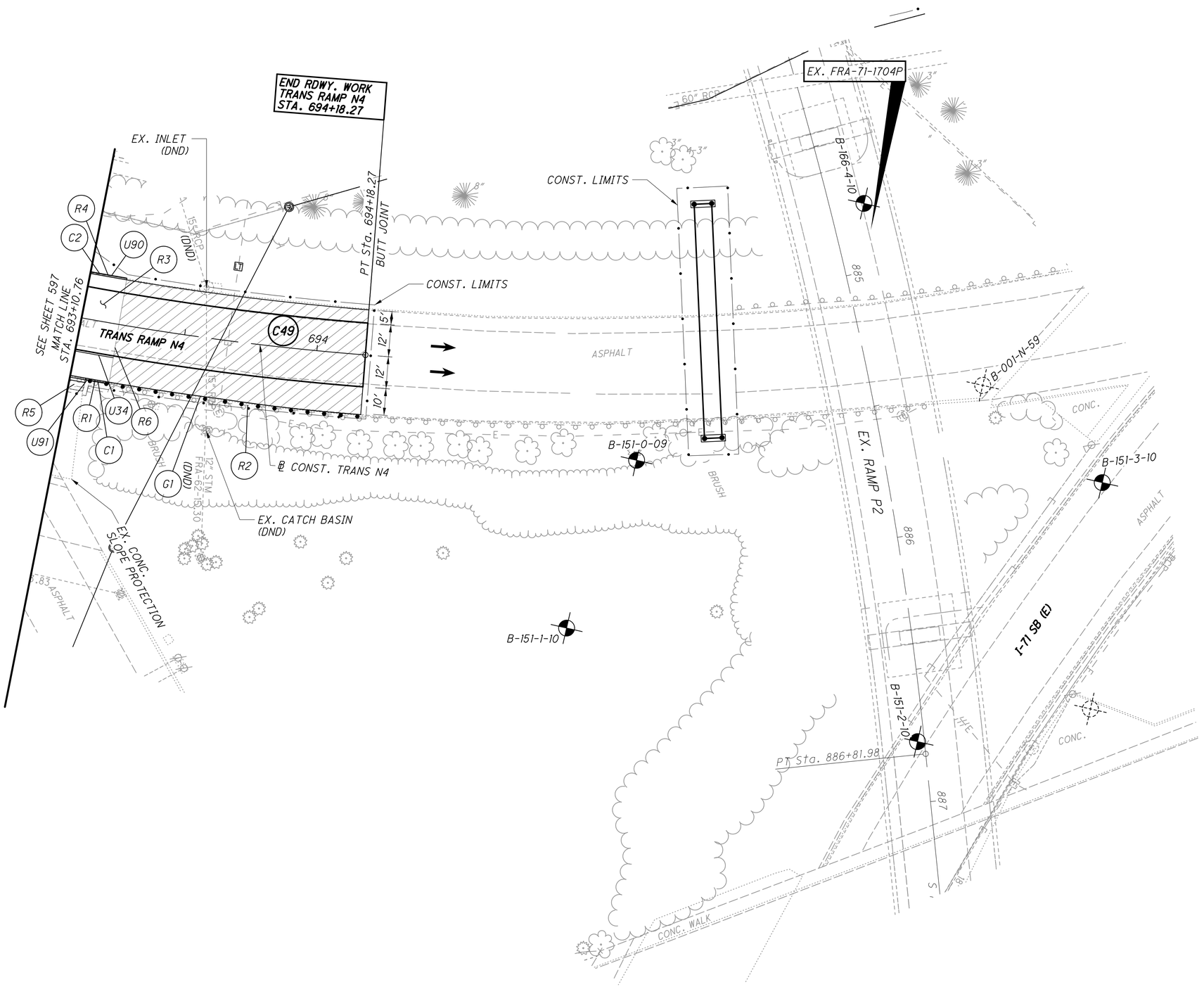

HORIZONTAL SCALE IN FEET
0 10 20 40

CALCULATED | CHECKED

PLAN - I-70 INTERCHANGE
TRANS RAMP N4 STA. 693+00 TO STA. 694+18.27

FRA-70-14.54

661
2317

ms consultants, inc.

Batchplot Spec: \\msconsultants.com\Files\production\03\60\06634_2E\standards\plotdrv\batchplt.spc
Pen Table: N:\03\60\06634_2E\standards\tables\V8i_ms_std_06634_2D_Plan View_NoClouds.tbl
Plot Driver: \\msconsultants.com\Files\Standards\ustn\ohdot\v8i\ms\plotting\PDF.pltcfg
Ohio DOT Workspace: ohdotV8i
70\71 East Interchange 2E
PID#: 60-06634_2E_Columbus
www.msconsultants.com

Model: Sheet
Printed: 10/24/2018 @ 1:43:27 PM
File: N:\03\60\06634_2E\roadway\sheets\105220PD25.dgn
View: FENCE_VIEW1
By: tbrendinger

1" 0.5" 0

34" x 22"

PLOT.CEL

ms consultants, inc.
msconsultants.com

Ohio DOT Workspace
70\71 East Interchange 2E
www.msconsultants.com

Batchplot Spec: \\msconsultants.com\files\production\03\60\06634_2E\standards\plotdrv\batchplt.spc
Pen Table: N:\03\60\06634_2E\standards\tables\V8i_ms_std_06634_2D_Plan View_NoClouds.tbl
Plot Driver: \\msconsultants.com\files\Standards\ustn\ohdot\v8i\ms\plotting\PDF.pltcfg

34" x 22"

View: FENCE_VIEW1
By: hbrendlinger
Model: Sheet
Printed: 10/24/2018 @ 1:43:29 PM
File: N:\03\60\06634_2E\roadway\sheets\105322G0025.dgn

REF. NO.	SHEET NO.	STATION TRANS. RAMP N4 - (TN4) FROM	TO	SIDE	202 PAVEMENT REMOVED SQ YD	202 CONCRETE SLOPE PROTECTION REMOVED SQ YD	202 CURB REMOVED FT	202 GUARDRAIL REMOVED FT	252 FULL DEPTH PAVEMENT SAWING FT	609 CURB, TYPE 4-C FT	626 BARRIER REFLECTOR, TYPE 2, BI-DIRECTIONAL EACH	608 MGS BRIDGE TERMINAL ASSEMBLY, TYPE 2 EACH	606 GUARDRAIL TYPE MGS FT
R1	661	693+10.47 (TN4)	693+25.00 (TN4)	RT			15						
R2	661	693+10.47 (TN4)	694+18.27 (TN4)	RT				110					
R3	661	693+10.47 (TN4)	693+25.00 (TN4)	LT/RT	62								
R4	661	693+10.99 (TN4)	693+25.00 (TN4)	LT			14						
R5	661	693+10.47 (TN4)	693+15.76 (TN4)	RT		3							
R6	661	693+25.00 (TN4)		LT/RT					39				
C1	661	693+16.19 (TN4)	693+25.00 (TN4)	RT						9			
C2	661	693+10.99 (TN4)	693+25.00 (TN4)	LT						14			
G1	661	693+25.00 (TN4)	694+18.27 (TN4)	RT							2	1	38
TOTALS CARRIED TO SUB-SUMMARY					62	3	29	110	39	23	2	1	38

CALCULATED JAP
CHECKED TAZ

ESTIMATED QUANTITIES

FRA-70-14.54

ms consultants, inc.

PLOT.CEL

ms consultants, inc.
msconsultants.com

CROSS REFERENCES	
SHEET NO	DESCRIPTION
	PROFILE(S)
713-715	TRANS I-71 SB (WEST SIDE)
1135-1136	PAVEMENT DETAIL
1257B	STORM SEWER PROFILES
1149	GRADING DETAIL

C67

P.I. STA. 990+09.57
Ls = 160.00'
f s = 4° 24' 00"
LT = 106.70'
ST = 53.36'
x = 159.91'
y = 4.09'
k = 79.98'
p = 1.02'
CS = 989+56.21
ST = 991+16.21

SEE SHEET 658
MATCH LINE STA. 987+50
+53.04
CONST. LIMITS
U81
B1
S1
E3
B2
T572
U84
D1
D2
T573
B3
U85
T574
R4
E4
U88
B4
U82
T571
D3
D4
988
TRANS I-71 SB (W)
B-171-0-09
989
R6
T575
D5
R10
R5
990
C67
U86
R3
U87
@ CONST. TRANS I-71 SB (W)
991
U83
E1
R1
13762
D6
E2
R11
CONST. LIMITS
+00.00
CS Sta. 989+56.21
B-001-0-10
+26.61
END GRADED SHLDR.
SAW CUT EX. CURB
EX. CURB (DND)
ST Sta. 991+16.21
END PVMT REPLACEMENT
STA. 991+29.00
B-172-0-09
END RDWY. WORK
TRANS I-71 SB (W)
STA. 992+04.01
B-202-0-10
B-152-0-09
B-008-N-59
B-152-1-10
I-71 SB (E)
I-71 NB
DENSE TREES
ASPHALT
GRASS
CONCRETE
WALL
FLOWER BED
BRUSH
CONC BARRIER
OVERHEAD SIGN
60" STM
36" STM
54" STM
30" STM
12" RCP
15" RCP
18" RCP
24" RCP
27" RCP
15" CPP
12" CPP
12" G
8" W
8" G
6" W
6" G
EX. 6" U.D.
EX LA-R/W
NDONED
SUE LEVEL B
SUE LEVEL C
SUE LEVEL D
PER SUE LEVEL C
ASPHALT
CONCRETE
E. MAIN ST.
I 71
992
R2
10'
12'
9'
7.5'
15'
18'

N

HORIZONTAL SCALE IN FEET
0 10 20 40

CALCULATED | CHECKED

PLAN - I-71 SOUTHBOUND
RAMP Q1 STA. 1007+50 TO STA. 1011+30

FRA-70-14.54

668
2317

Batchplot Spec: \\msconsultants.com\files\production\03\60\06634_2E\standards\plotdrv\batchplt.spc
Pen Table: W:\03\60\06634_2E\standards\tables\V8i_ms_std_06634_2D_Plan View.tbl
Plot Driver: \\msconsultants.com\files\Standards\astm\ohdot\v8i\ms\plotting\PDF.prc/g

Model: Sheet
Printed: 6/19/2018 @ 8:47:53 AM
File: W:\03\60\06634_2E\roadway\sheets\1065220P0271.dgn

View: SHEET
By: jbougios

34" x 22"

1" 0.5" 0

Ohio DOT Workspace
70\71 East Interchange 2E

DGN: ohdot\v8i
PCF: 60-06634_2E_Columbus

www.msconsultants.com

ms consultants, inc.

PLOT.CEL
ms consultants, inc.
msconsultants.com
www.msconsultants.com
Ohio DOT Workspace
70\71 East Interchange 2E
1"
0.5"
0
Batchplot Spec: \\msconsultants.com\files\production\Q3\60\06634_2E\standards\plotdrv\batchplt.spc
Pen Table: N:\Q3\60\06634_2E\standards\tables\V8i_ms_std_06634_2D_Plan View_NoClouds.tbl
Plot Driver: \\msconsultants.com\files\Standards\ustn\ohdot\v8i\ms\plotting\PDF.pltcfg
PDF: ohdot\V8i
JOB#: 60-06634_2E_Columbus
34" x 22"
Model: Sheet
Plotted: 10/24/2018 @ 1:43:41 PM
File: N:\Q3\60\06634_2E\roadway\sheets\Q3260027.dgn
View: FENCE_VIEW1
By: hbrendinger

REF. NO.	SHEET NO.	STATION		SIDE	202	202	202	202	202							252		512	622		622	626	622		670
		TRANS 71 SB (T71SB)			PAVEMENT REMOVED	PIPE REMOVED, 24" AND UNDER	CURB REMOVED	INLET REMOVED	CATCH BASIN REMOVED							FULL DEPTH PAVEMENT SAWING		SEALING OF CONCRETE SURFACES	CONCRETE BARRIER, SINGLE SLOPE, TYPE D		CONCRETE BARRIER, END ANCHORAGE, REINFORCED, TYPE D	BARRIER REFLECTOR, TYPE 1, ONE-WAY	BARRIER TRANSITION		DITCH EROSION PROTECTION MAT, TYPE B
		FROM	TO		SQ YD	FT	FT	EACH	EACH							FT		SQ YD	FT		EACH	EACH	EACH		SQ YD
R1	668	987+50.00 (T71SB)	991+25.00 (T71SB)	R/L	1042																				
R2	668	991+25.00 (T71SB)		R/L												43									
R3	668	989+90.23 (T71SB)	989+93.97 (T71SB)	R/L		42		1																	
R4	668	989+90.23 (T71SB)	990+44.23 (T71SB)	LT		53		1																	
R5	668	989+13.60 (T71SB)	989+90.23 (T71SB)	LT		78		2																	
R6	668	989+16.05 (T71SB)	988+71.08 (T71SB)	LT/RT		98			2																
R10	668	987+51.05 (T71SB)	992+04.01 (T71SB)	LT			454																		
R11	668	987+53.36 (T71SB)	990+26.61 (T71SB)	RT			284																		
E1	668	987+51.57 (T71SB)	988+73.27 (T71SB)	RT																					102
E2	668	988+73.27 (T71SB)	990+00.00 (T71SB)	RT																					106
E3	668	987+53.05 (T71SB)	989+07.48 (T71SB)	LT																					125
E4	668	989+21.85 (T71SB)	990+74.72 (T71SB)	LT																					124
B1	668	987+48.49 (T71SB)	988+76.70 (T71SB)	LT															104		1	2			
B2	668	988+91.23 (T71SB)	989+20.51 (T71SB)	LT																	2	1			
B3	668	989+40.99 (T71SB)	989+70.76 (T71SB)	LT																	2	1			
B4	668	989+91.16 (T71SB)	992+04.01 (T71SB)	LT															177		1	3	1		
S1	668	987+48.49 (T71SB)	992+04.01 (T71SB)	LT														409							
TOTALS CARRIED TO SUB-SUMMARY					1042	271	738	4	2							43		409	281		6	7	1		457

CALCULATED JAP
CHECKED TAZ

ESTIMATED QUANTITIES

FRA-70-14.54

669
2317

ms consultants, inc.

PLOT.CEL

ms consultants, inc.
msconsultants.com

www.msconsultants.com

Ohio DOT Workspace
70\71 East Interchange 2E

0 0.5" 1"

PDF: ohdot\V8i
PCF: 60-06634_2E_Columbus

Batchplot Spec: \\msconsultants.com\files\production\03\60\06634_2E\standards\plotdrv\batchplt.spc
Pen Table: N:\03\60\06634_2E\standards\tables\V8i_ms_std_06634_2D_Plan View.tbl
Plot Driver: \\msconsultants.com\files\Standards\ustn\ohdot\v8i\ms\plotting\PDF.pltcfg

Model: Sheet
Printed: 6/19/2018 @ 8:48:08 AM View: FENCE_VIEW1
File: N:\03\60\06634_2E\roadway\sheets\05322G0027A.dgn By: jdouglas

34" x 22"

REF. NO.	SHEET NO.	STATION		SIDE	611		611	611				611	611		611										
		TRANS I-71 SB - (T71SB)			15" CONDUIT, TYPE B		18" CONDUIT, TYPE B	15" CONDUIT, TYPE C				CATCH BASIN, NO. 8	INLET, NO. 3 FOR SINGLE SLOPE BARRIER, TYPE D		MANHOLE, NO. 3										
		FROM	TO		FT		FT	FT				EACH	EACH		EACH										
D1	668	988+80.98 (T71SB)	989+14.75 (T71SB)	LT	33								1												
D2	668	989+16.21 (T71SB)	989+14.75 (T71SB)	LT			10	6				1													
D3	668	989+30.75 (T71SB)	989+14.75 (T71SB)	LT	16								1												
D4	668	989+80.95 (T71SB)	989+30.75 (T71SB)	LT	49								1												
D5	668	989+14.75 (T71SB)	988+73.19 (T71SB)	L/R			78								1										
D6	668	988+73.19 (T71SB)	988+63.91 (T71SB)	RT			6					1													
TOTALS CARRIED TO SUB-SUMMARY					98		94	6				2	3		1										

CALCULATED JAP
CHECKED TAZ

ESTIMATED QUANTITIES

FRA-70-14.54

670
2317

ms consultants, inc.

PLOT.CEL

ms consultants, inc.
msconsultants.com

www.msconsultants.com

Ohio DOT Workspace
70\71 East Interchange 2E

0 0.5" 1"

PDF: ohdot\V8i
PCF: 60-06634_2E_Columbus

Batchplot Spec: \\msconsultants.com\files\production\03\60\06634_2E\standards\plotdr\batchplt.spc
Pen Table: N:\03\60\06634_2E\standards\tables\V8i_ms_std_06634_2D_Plan View.tbl
Plot Driver: \\msconsultants.com\files\Standards\ustn\ohdot\v8i\ms\plotting\PDF.pltcfg

Model: Sheet
Printed: 6/19/2018 @ 8:48:24 AM View: FENCE_VIEW1
File: N:\03\60\06634_2E\roadway\sheets\105322GF003.dgn By: jdougas

34" x 22"

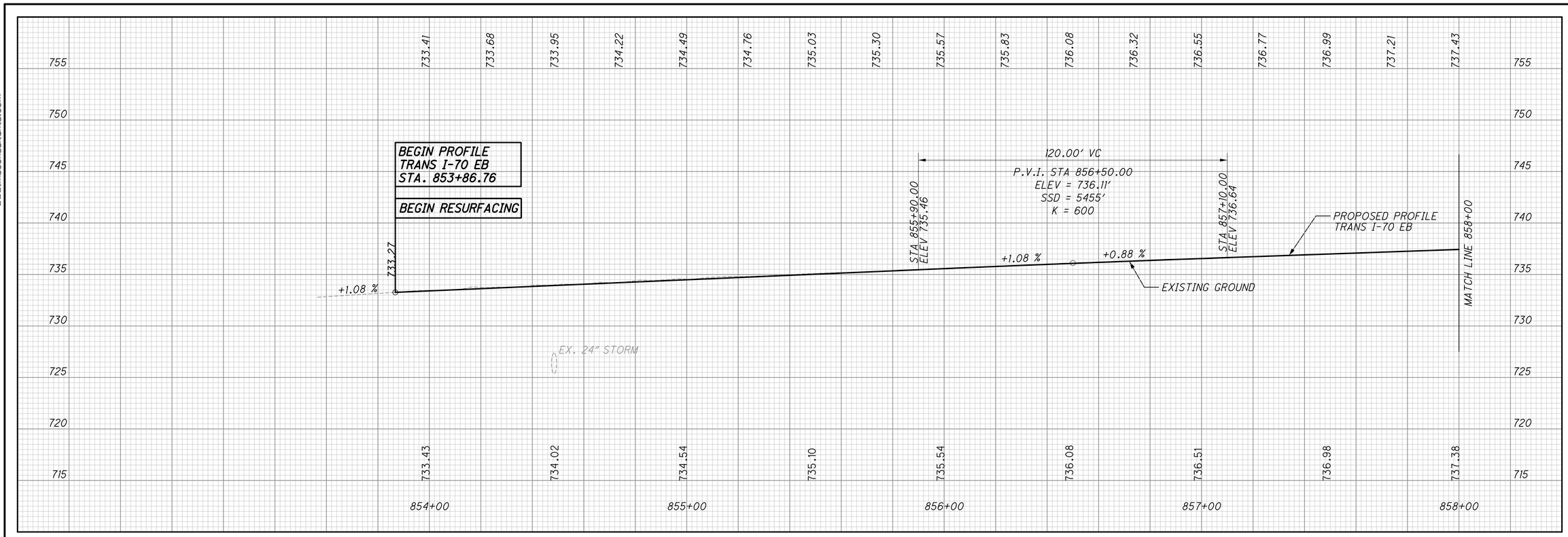

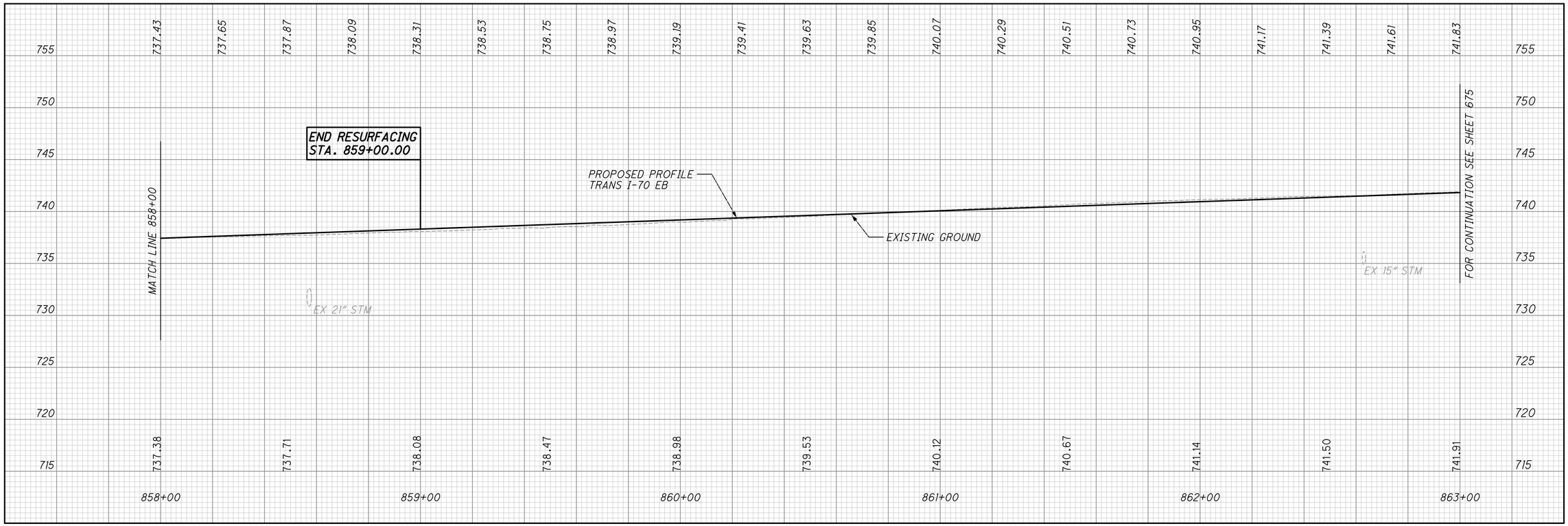

CALCULATED | CHECKED

PROFILE - TRANS. I-70 EB (WEST)
STA. 853+86.76 TO STA. 863+00.00

FRA-70-14.54

674
2317

PLOT.CEL

ms consultants, inc.
msconsultants.com

www.msconsultants.com

Ohio DOT Workspace
70\71 East Interchange 2E

1"
0.5"
0

PDF: ohdot\V8i
PCF: 60-06634_2E_Columbus

Batchplot Spec= \\msconsultants.com\files\production\03\60\06634_2E\standards\plotdr\batchplt.spc
Pen Table= N:\03\60\06634_2E\standards\tables\V8i_ms_std_06634_2D_Plan View.tbl
Plot Driver= \\msconsultants.com\files\standards\usetn\ohdot\v8i\ms\plotting\PDF.pltcfg

Model: Sheet
Printed: 6/19/2018 @ 8:48:29 AM View: FENCE_VIEW1
By: jdouglas
File: N:\03\60\06634_2E\roadway\sheets\005326F004.dgn

34" x 22"

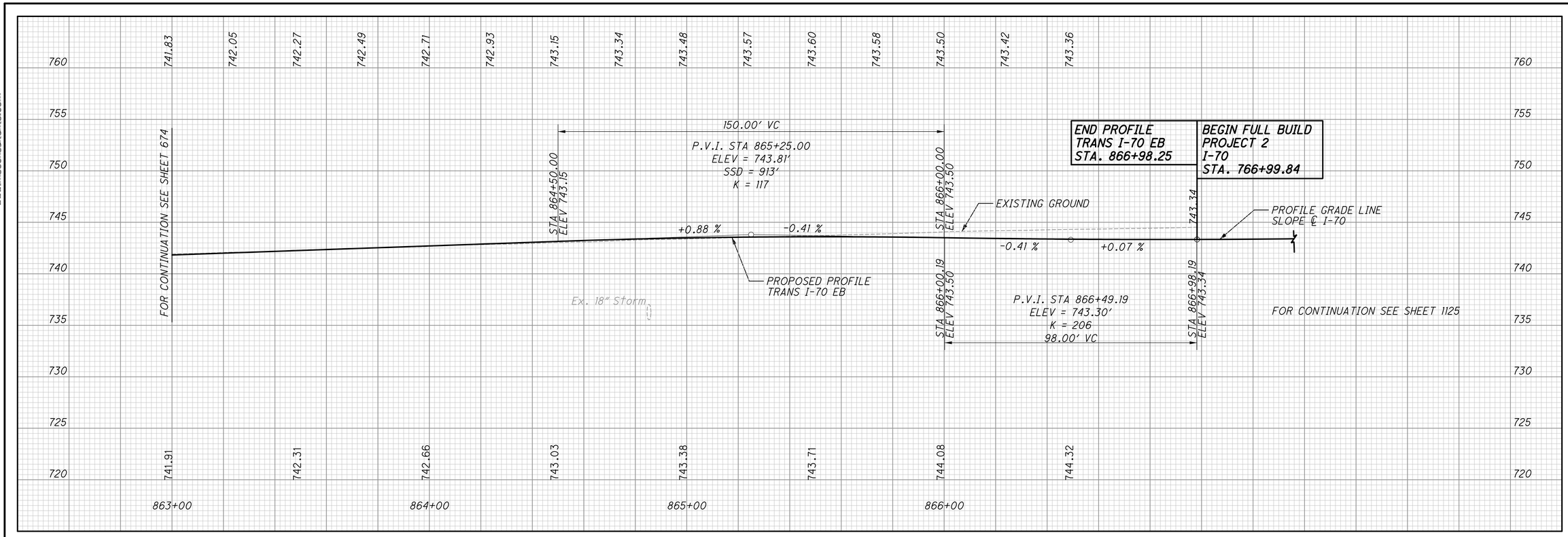

CALCULATED

CHECKED

PROFILE - TRANS. I-70 EB (WEST)
STA. 863+00.00 TO STA. 866+98.25

FRA-70-14.54

675
2317

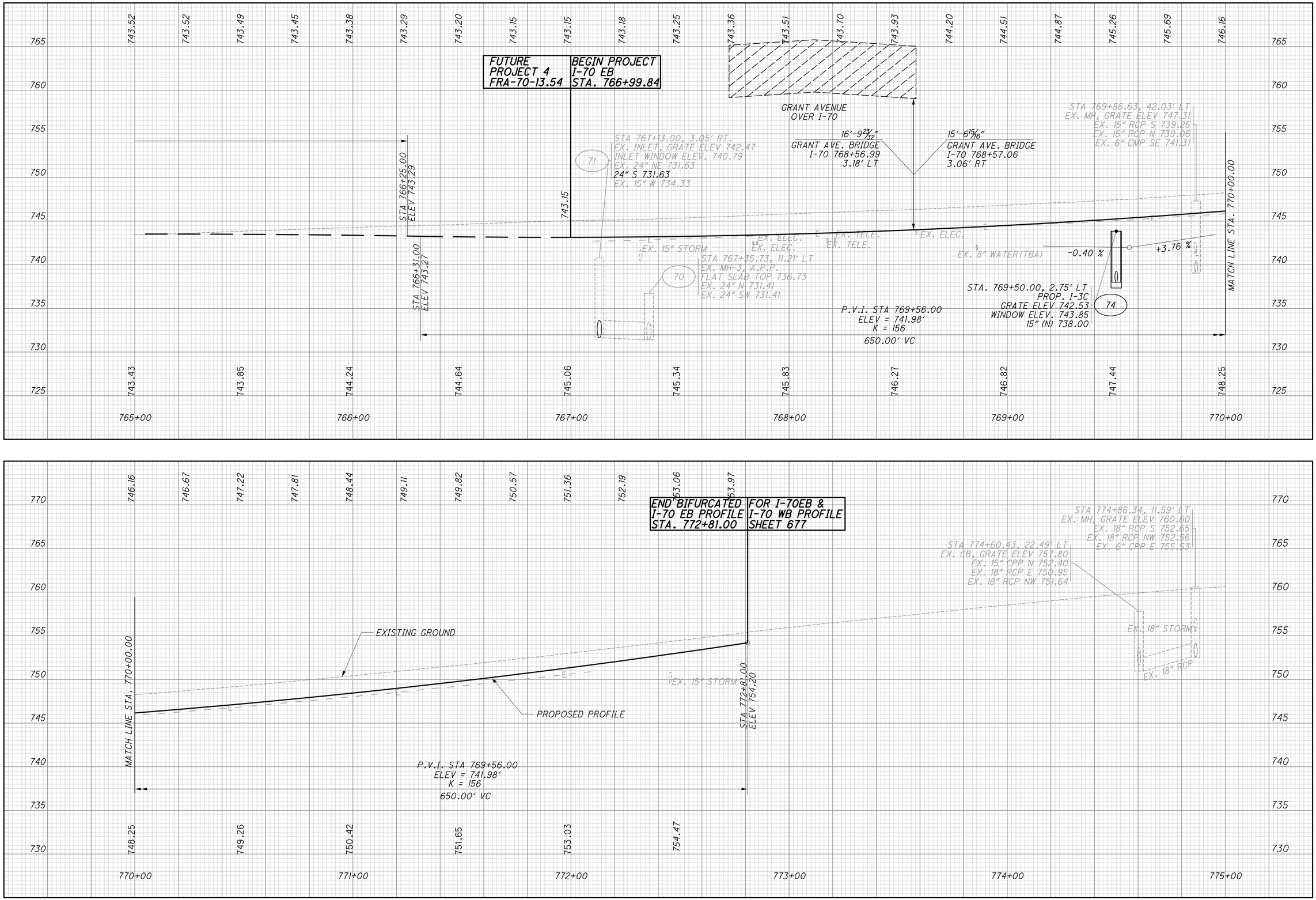

PLOT.CEL

ms consultants, inc.
msconsultants.com

Ohio DOT Workspace
70\71 East Interchange 2E
www.msconsultants.com

Batchplot Spec: \\msconsultants.com\files\production\03\60\06634_2E\standards\plotdrv\batchplt.spc
Pen Table: N:\03\60\06634_2E\standards\tables\V8i_ms_std_06634_2D_Plan View.tbl
Plot Driver: \\msconsultants.com\files\Standards\ustn\ohdot\v8i\ms\plotting\PDF.pltcfg

34" x 22"

Model: Sheet View: FENCE_VIEW1
Printed: 6/19/2018 @ 8:48:31 AM By: jdouglas
File: N:\03\60\06634_2E\roadway\sheets\105322GF005.dgn

CALCULATED
CHECKED

PROFILE - BIFURCATED I-70 EB
STA. 765+00.00 TO STA. 772+81.00

FRA-70-14.54

ms consultants, inc.

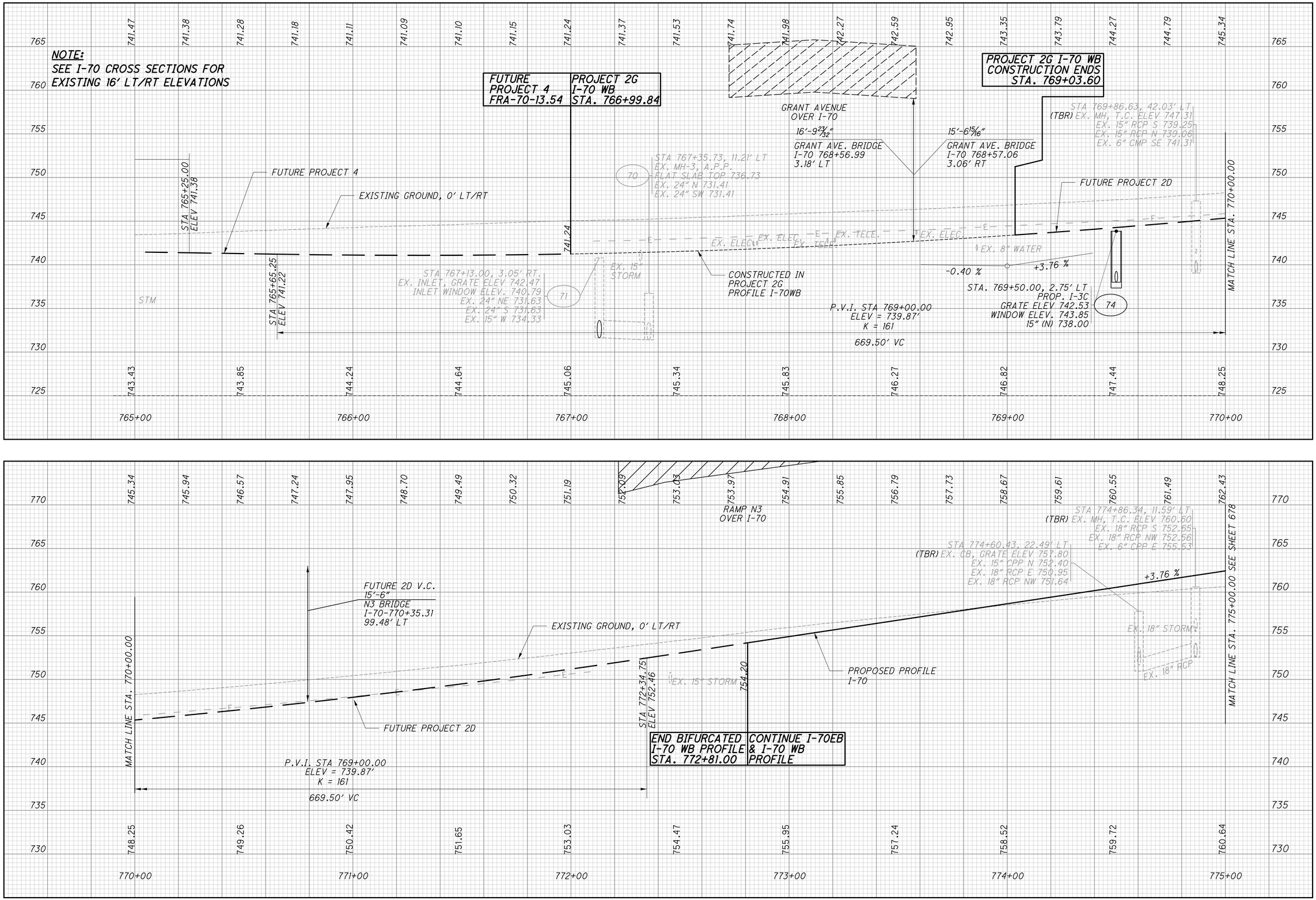

PROFILE - I-70

STA. 765+00.00 TO STA. 775+00.00

FRA-70-14.54

CALCULATED

CHECKED

677
2317

ms consultants, inc.

PLOT.CEL

ms consultants, inc.
msconsultants.com

Ohio DOT Workspace
70\71 East Interchange 2E
www.msconsultants.com

Batchplot Spec: \\msconsultants.com\files\production\03\60\06634_2E\standards\plotdrv\batchplt.spc
Pen Table: N:\03\60\06634_2E\standards\tables\V8i_ms_std_06634_2D_Plan View.tbl
Plot Driver: \\msconsultants.com\files\Standards\ustn\ohdot\v8i\ms\plotting\PDF.pltcfg

34" x 22"

Model: Sheet
Printed: 6/19/2018 @ 8:48:33 AM
File: N:\03\60\06634_2E\roadway\sheets\105322GF005a.dgn
View: FENCE_VIEW1
By: jdouglas

ms consultants, inc.

PLOT.CEL

ms consultants, inc.
msconsultants.com

www.msconsultants.com

Ohio DOT Workspace
70\71 East Interchange 2E

0 0.5" 1"

ODF: ohdot\V8i
PCF: 60-06634_2E_Columbus

Batchplot Spec: \\msconsultants.com\files\production\03\60\06634_2E\standards\plotdr\batchplt.spc
Pen Table: N:\03\60\06634_2E\standards\tables\V8i_ms_std_06634_2D_Plan View.tbl
Plot Driver: \\msconsultants.com\files\Standards\ustn\ohdot\v8i\ms\plotting\PDF.pltcfg

Model: Sheet
Printed: 6/19/2018 @ 8:48:35 AM
File: N:\03\60\06634_2E\roadway\sheets\105226F006.dgn

View: FENCE_VIEW1
By: jdouglas

34" x 22"

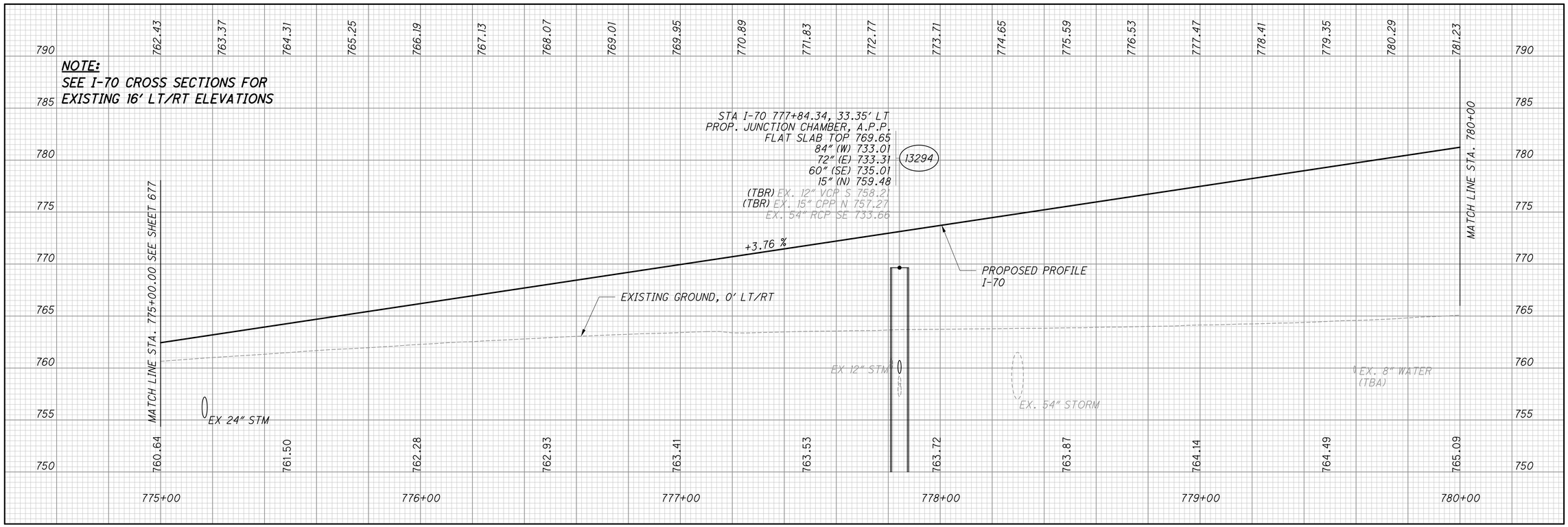

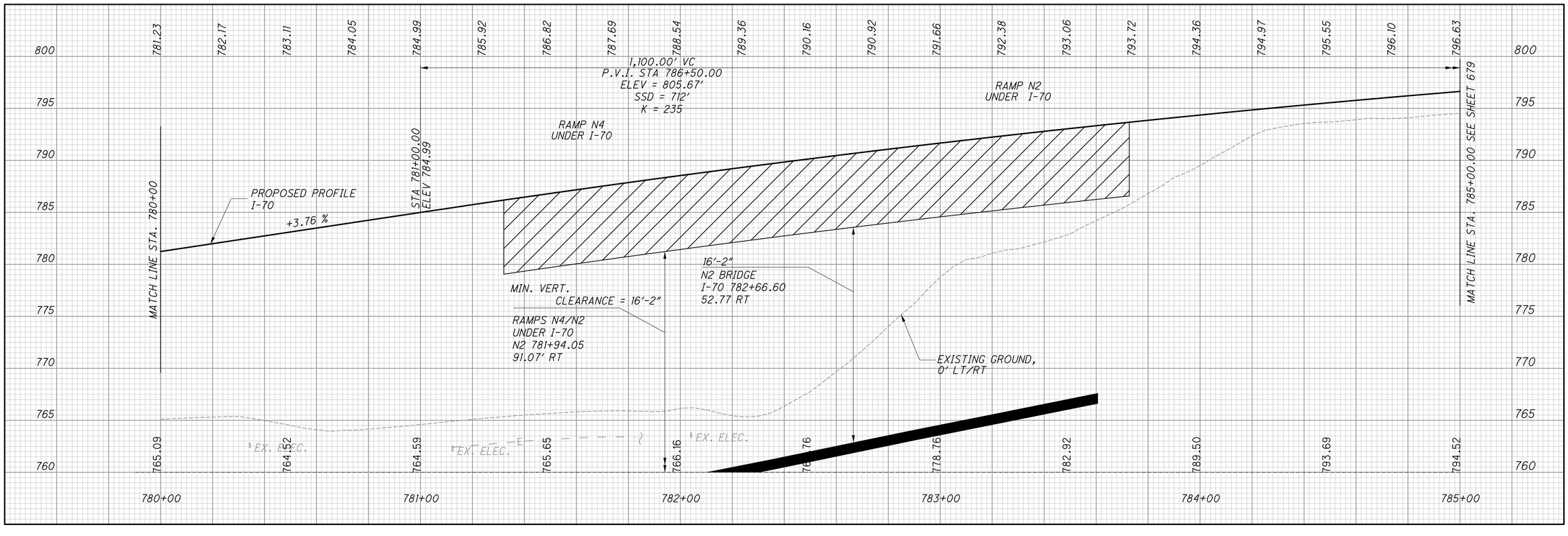

CALCULATED | CHECKED

PROFILE - I-70
STA. 775+00 TO STA. 785+00

FRA-70-14.54

678
2317

ms consultants, inc.

PLOT.CEL

ms consultants, inc.
msconsultants.com

www.msconsultants.com

Ohio DOT Workspace
70\71 East Interchange 2E

PDF: ohdot\V8i
PCF: 60-06634_2E_Columbus

Batchplot Spec: \\msconsultants.com\files\production\03\60\06634_2E\standards\plotdr\batchplt.spc
Pen Table: N:\03\60\06634_2E\standards\tables\V8i_ms_std_06634_2D_Plan View.tbl
Plot Driver: \\msconsultants.com\files\Standards\ustn\ohdot\v8i\ms\plotting\PDF.pltcfg

Model: Sheet
Printed: 6/19/2018 @ 8:48:43 AM
File: N:\03\60\06634_2E\roadway\sheets\105226F007.dgn
View: FENCE_VIEW1
By: jdouglas

34" x 22"

CALCULATED | CHECKED

PROFILE - I-70
STA. 785+00 TO STA. 795+00

FRA-70-14.54

679
2317

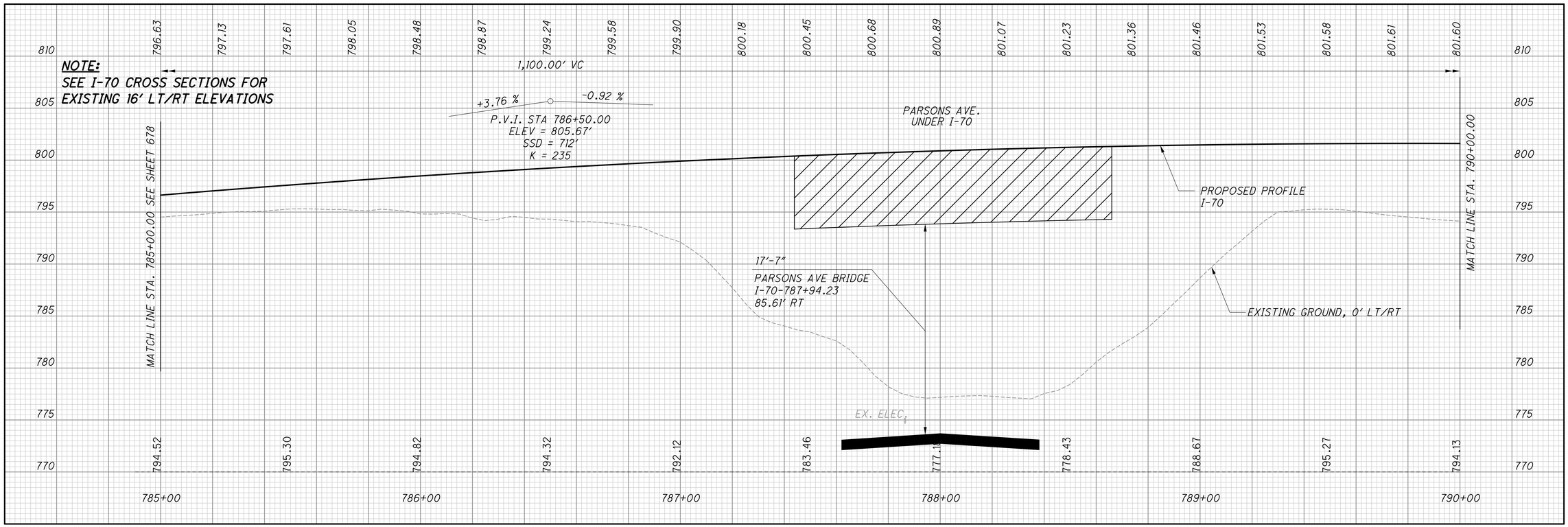

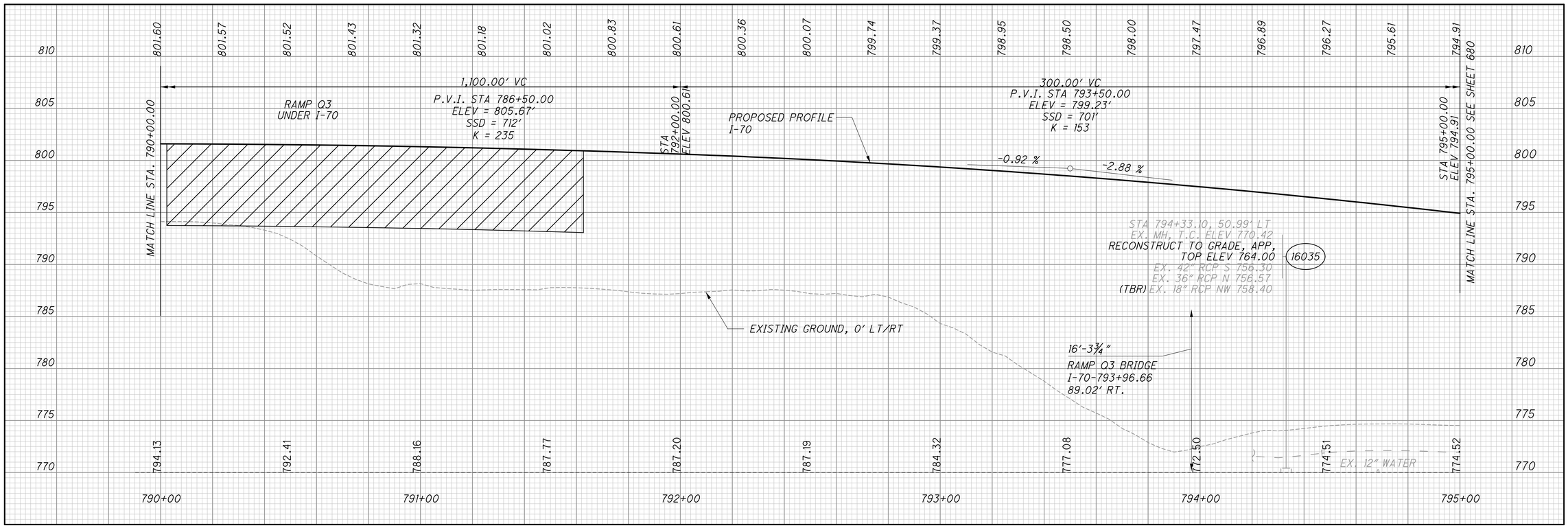

34" x 22"
Model: Sheet View: FENCE_VIEW1
Printed: 6/19/2018 @ 8:48:45 AM By: jdouglas
File: N:\03\60\06634_2E\roadway\sheets\105322GF008.dgn
Batchplot Spec: \\msconsultants.com\files\production\03\60\06634_2E\standards\plotdrv\batchplt.spc
Pen Table: N:\03\60\06634_2E\standards\tables\V8i_ms_std_06634_2D_Plan View.tbl
Plot Driver: \\msconsultants.com\files\Standards\ustn\ohdot\v8i\ms\plotting\PDF.pltcfg
DGF: ohdotV8i
PCF: 60-06634_2E_Columbus
Ohio DOT Workspace
70\71 East Interchange 2E
ms consultants, inc.
msconsultants.com
www.msconsultants.com
PLOT.CEL

NOTE:
SEE I-70 CROSS SECTIONS FOR EXISTING 16' LT/RT ELEVATIONS

MATCH LINE STA. 800+00.00

MATCH LINE STA. 795+00.00 SEE SHEET 679

PROPOSED PROFILE I-70

EXISTING GROUND, 0' LT/RT

EX. ELEC.

-2.88 %

MATCH LINE STA. 800+00.00

MATCH LINE STA. 805+00.00 SEE SHEET 681

PROPOSED PROFILE I-70

EXISTING GROUND

-2.88 %

0 PROP 15" STM

STA 802+89.17, 5.97' LT.
(TBR) EX. MH, T.C. ELEV 775.10
EX. 12" CPP E 769.10
EX. 6" CPP N 769.25

STA 803+43.98, 5.94' RT.
(TBR) EX. CB, GRATE ELEV. 771.60
EX. 15" CPP N 767.60
EX. 15" RCP S 767.52
EX. 12" CPP SE 768.12
EX. 12" RCP W 768.39

STA 803+69.87, 13.94' RT.
EX. MH, T.C. ELEV 772.50 (TBR)
EX. 12" CPP NW 768.76

STA 802+75.43
ELEV 772.58

EX 12" STM

EX 15" STM

P.V.I. STA 805+37.93
ELEV = 765.02'
K = 138
525.00' VC

EX. 8" WATER (TBA)

EX. ELEC.

18TH ST OVER I-70

EX. ELEC.

782.33	780.51	774.52	794.91
780.85	779.07	774.03	793.47
777.25	777.63	774.11	792.03
777.44	776.19	773.97	790.59
776.14	774.75	774.51	789.15
775.30	773.31	776.15	787.71
773.73	771.90	778.53	786.27
772.38	770.64	780.71	784.83
772.61	769.56	782.08	783.39
771.13	768.66	783.71	781.95
770.80	767.94	782.33	780.51

PLOT.CEL

ms consultants, inc.
msconsultants.com

www.msconsultants.com

Ohio DOT Workspace
70\71 East Interchange 2E

DGN: ohdot\V8i
PCF: 60-06634_2E_Columbus

0 0.5" 1"

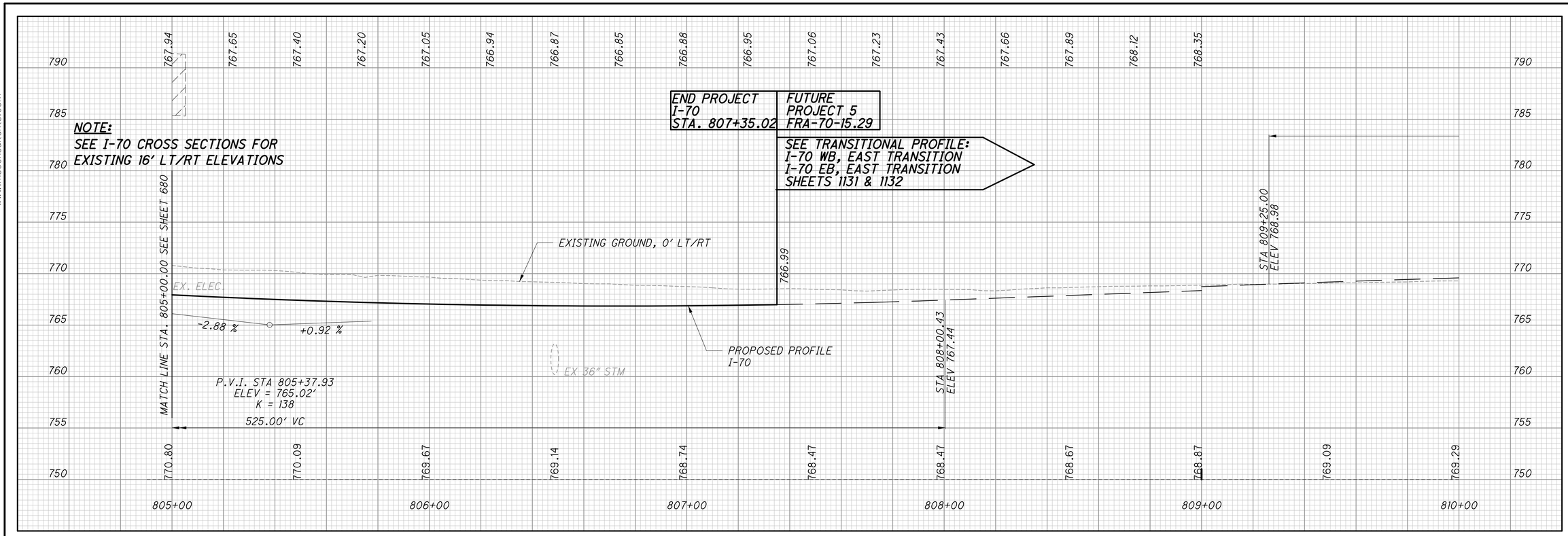

CALCULATED | CHECKED

PROFILE - I-70

STA. 805+00.00 TO STA. 807+35.03

FRA-70-14.54

681
2317

ms consultants, inc.

Batchplot Spec: \\msconsultants.com\files\production\03\60\06634_2E\standards\plotdrv\batchplt.spc
Pen Table: N:\03\60\06634_2E\standards\tables\V8i_ms_std_06634_2D_Plan View.tbl
Plot Driver: \\msconsultants.com\files\Standards\ustn\ohdot\v8i\ms\plotting\PDF.pltcfg

Model: Sheet
Plotted: 6/19/2018 @ 8:48:47 AM View: FENCE_VIEW1
By: jdougos
File: N:\03\60\06634_2E\roadway\sheets\1053226f009.dgn

34" x 22"

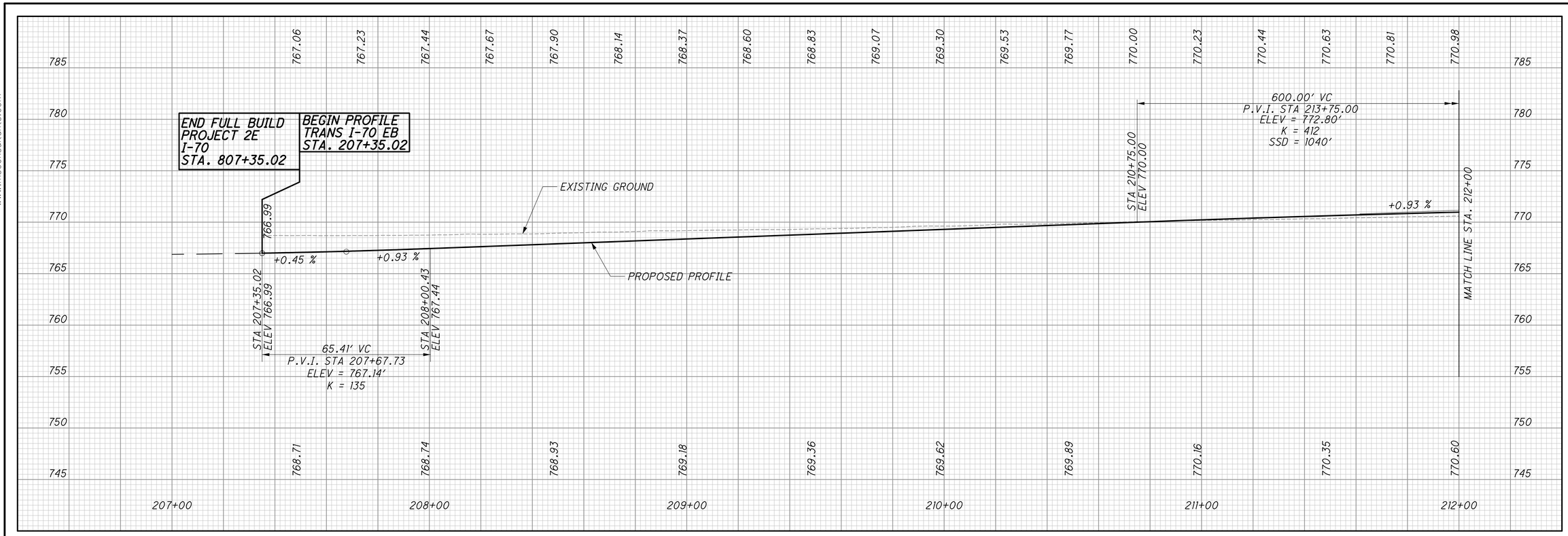

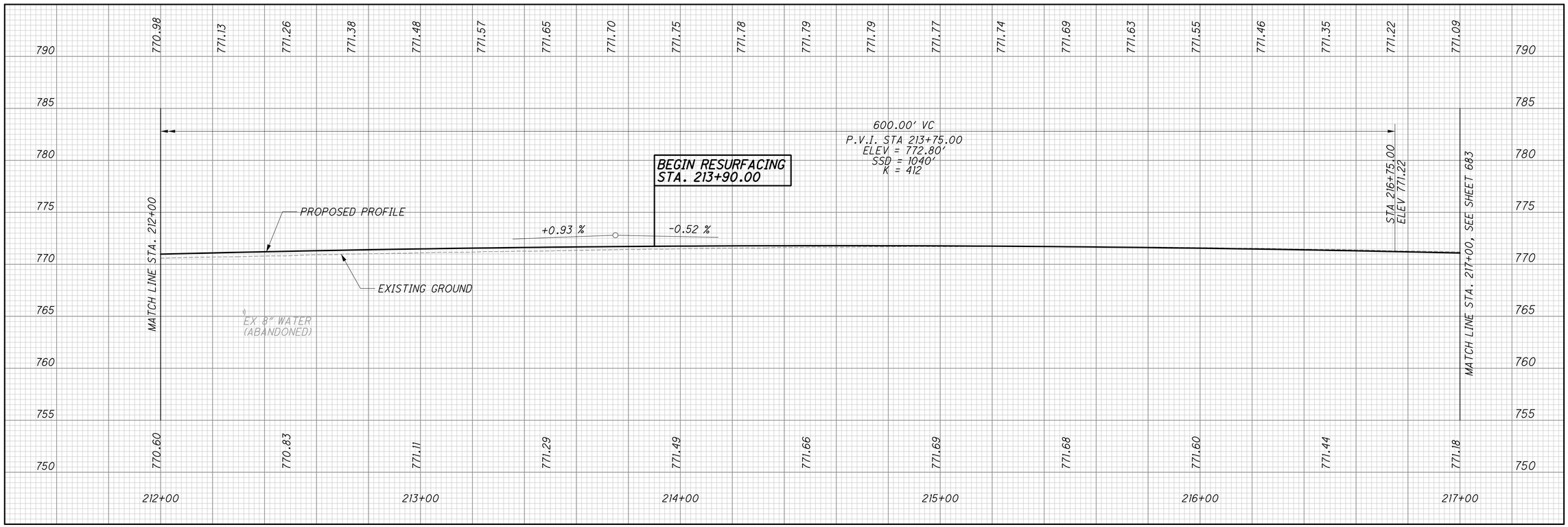

CALCULATED

CHECKED

PROFILE - TRANS. I-70 EB (EAST)
STA. 207+35.02 TO STA. 217+00.00

FRA-70-14.54

682
2317

PLOT.CEL
ms consultants, inc.
msconsultants.com
Ohio DOT Workspace
70\71 East Interchange 2E
www.msconsultants.com
Batchplot Spec: \\msconsultants.com\files\production\03\60\06634_2E\standards\plotdrv\batchplt.spc
Pen Table: N:\03\60\06634_2E\standards\tables\V8i_ms_std_06634_2D_Plan View.tbl
Plot Driver: \\msconsultants.com\files\Standards\ustn\ohdot\v8i\ms\plotting\PDF.pltcfg
34" x 22"
View: FENCE_VIEW1
By: jdouglas
Model: 105322GF092
Printed: 6/19/2018 @ 8:48:48 AM
File: N:\03\60\06634_2E\roadway\sheets\105322GF092.dgn
ms consultants, inc.

34" x 22"

Model: 105322GF093 View: FENCE_VIEW1
Printed: 6/19/2018 @ 8:48:50 AM By: jdouglas
File: N:\03\60\06634_2E\roadway\sheets\105322GF093.dgn

Batchplot Spec: \\msconsultants.com\files\production\03\60\06634_2E\standards\plotdrv\batchplt.spc
Pen Table: N:\03\60\06634_2E\standards\tables\V8i_ms_std_06634_2D_Plan View.tbl
Plot Driver: \\msconsultants.com\files\Standards\ustn\ohdot\v8i\ms\plotting\PDF.pltcfg

0 1"
0.5"

DGF: ohdotV8i
PCF: 60-06634_2E_Columbus

Ohio DOT Workspace
70\71 East Interchange 2E

ms consultants, inc.
msconsultants.com

PLOT.CEL

www.msconsultants.com

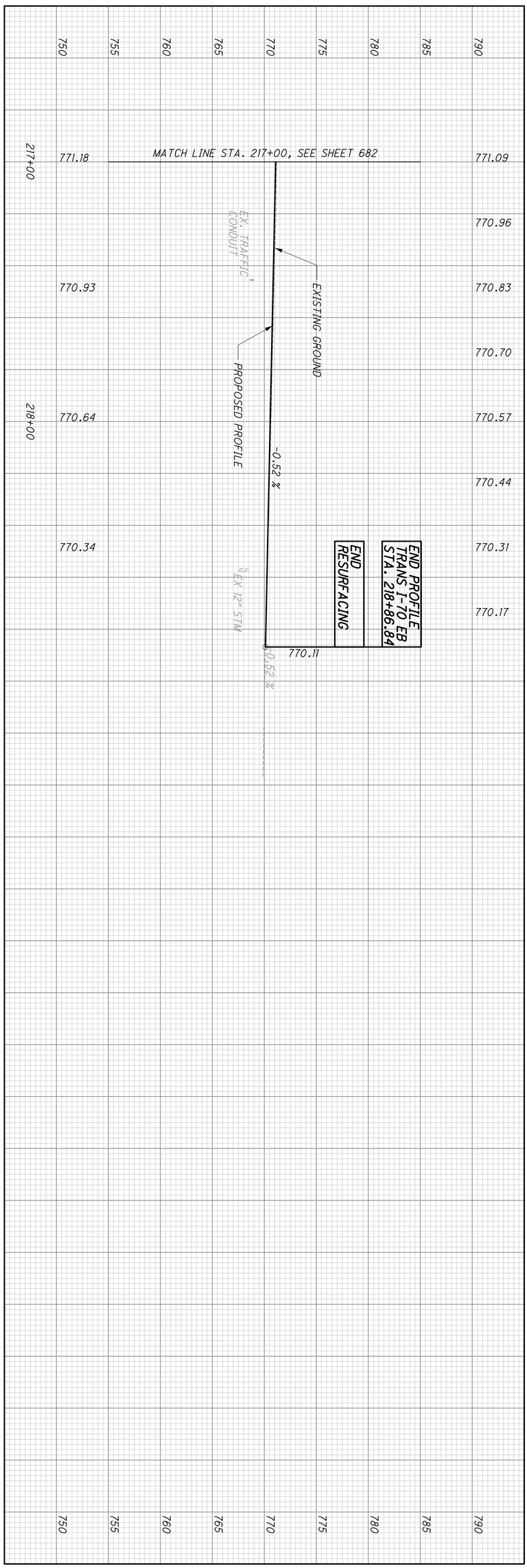

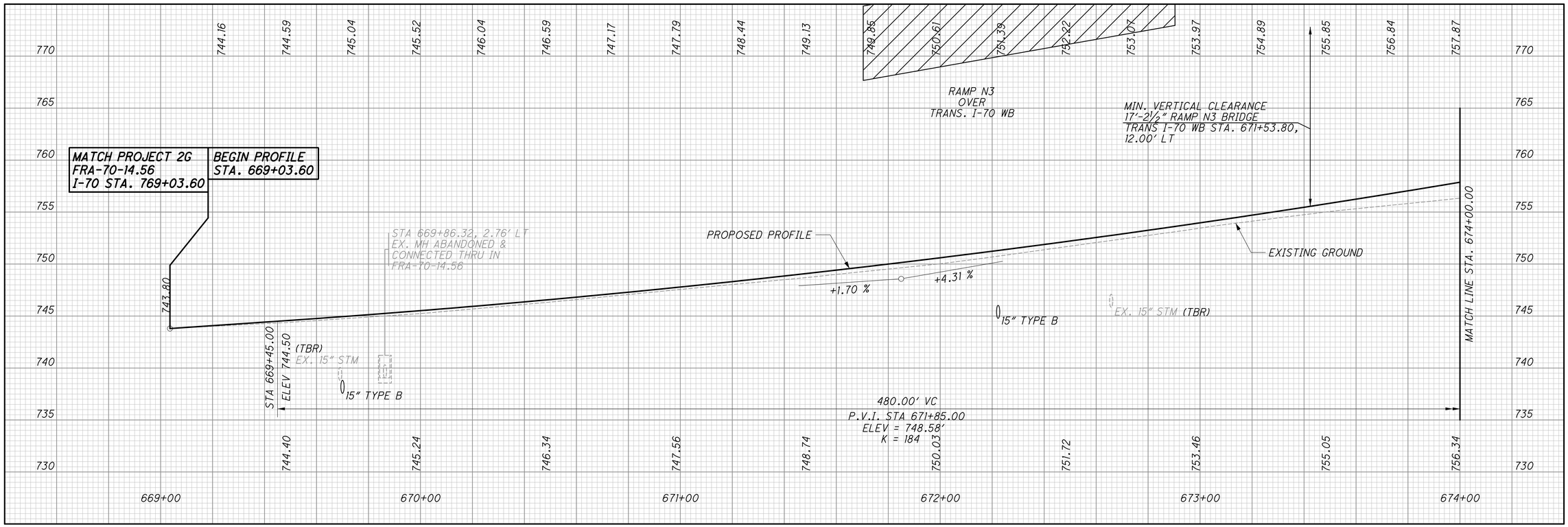

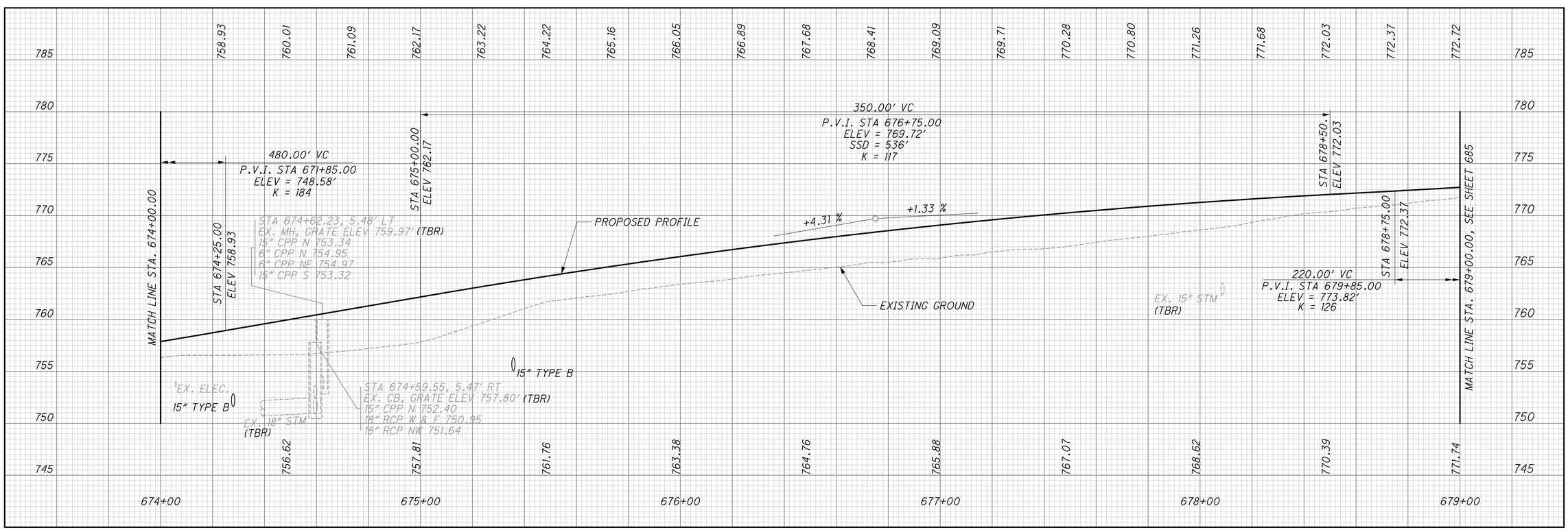

PROFILE - TRANS. I-70 WB
STA. 669+03.60 TO STA. 679+00.00

FRA-70-14.54

CALCULATED
CHECKED

684
2317

ms consultants, inc.

PLOT.CEL
ms consultants, inc.
msconsultants.com

Ohio DOT Workspace
70\71 East Interchange 2E
www.msconsultants.com

Batchplot Spec: \\msconsultants.com\files\production\03\60\06634_2E\standards\plotdrv\batchplt.spc
Pen Table: N:\03\60\06634_2E\standards\tables\V8i_ms_std_06634_2D_Plan View.tbl
Plot Driver: \\msconsultants.com\files\Standards\ustn\ohdot\v8i\ms\plotting\PDF.pltcfg

34" x 22"

Model: 105322GF077
Printed: 6/19/2018 @ 8:48:51 AM
File: N:\03\60\06634_2E\roadway\sheets\105322GF077.dgn
View: FENCE_VIEW1
By: jdouglas

34" x 22"

Model: 105322GF078 View: FENCE_VIEW1
Printed: 6/19/2018 @ 8:48:52 AM By: jdouglas
File: N:\03\60\06634_2E\roadway\sheets\105322GF078.dgn

Batchplot Spec: \\msconsultants.com\files\production\03\60\06634_2E\standards\plotdrv\batchplt.spc
Pen Table: N:\03\60\06634_2E\standards\tables\V8i_ms_std_06634_2D_Plan View.tbl
Plot Driver: \\msconsultants.com\files\Standards\ustn\ohdot\v8i\ms\plotting\PDF.pltcfg

0 1"
0.5"

DGN: ohdotV8i
PCF: 60-06634_2E_Columbus

Ohio DOT Workspace
70\71 East Interchange 2E

ms consultants, inc.
msconsultants.com

PLOT.CEL

www.msconsultants.com

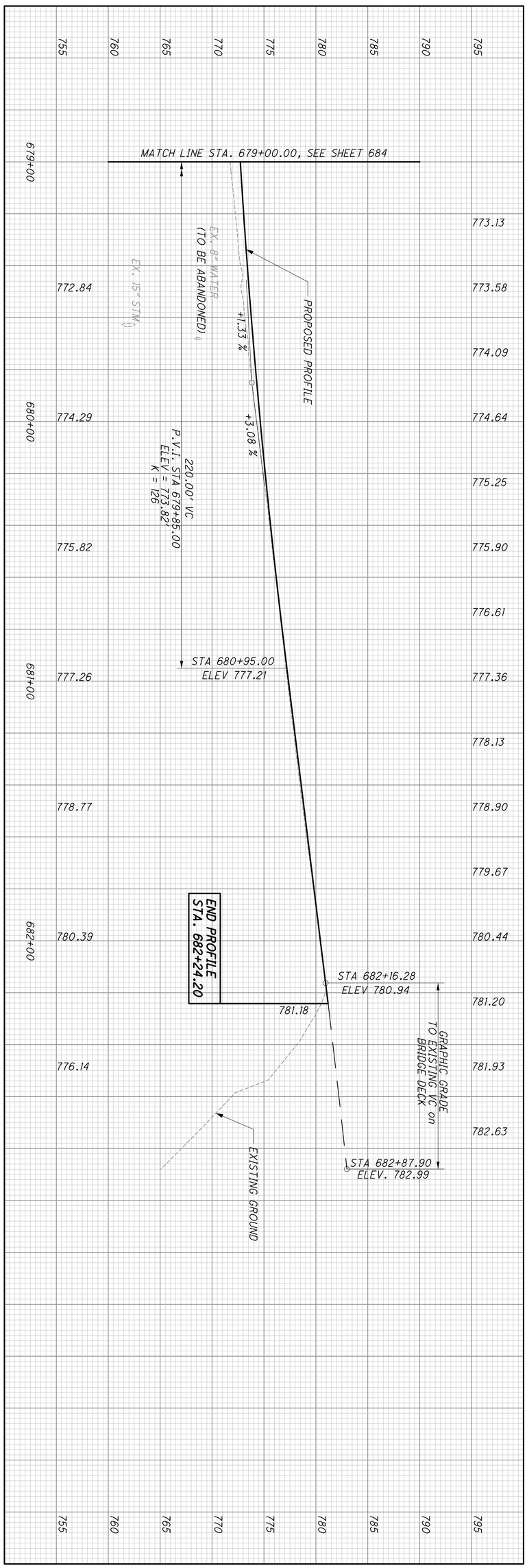

34" x 22"
Model: 105322GF085 View: FENCE_VIEW1
Printed: 6/19/2018 @ 8:48:53 AM By: jdouglas
File: N:\03\60\06634_2E\roadway\sheets\105322GF085.dgn
Batchplot Spec: \\msconsultants.com\files\production\03\60\06634_2E\standards\plotdrv\batchplt.spc
Pen Table: N:\03\60\06634_2E\standards\tables\V8i_ms_std_06634_2D_Plan View.tbl
Plot Driver: \\msconsultants.com\files\Standards\ustn\ohdot\v8i\ms\plotting\PDF.pltcfg
DGF: ohdotV8i
PCF: 60-06634_2E_Columbus
Ohio DOT Workspace
70\71 East Interchange 2E
ms consultants, inc.
msconsultants.com
PLOT.CEL
www.msconsultants.com

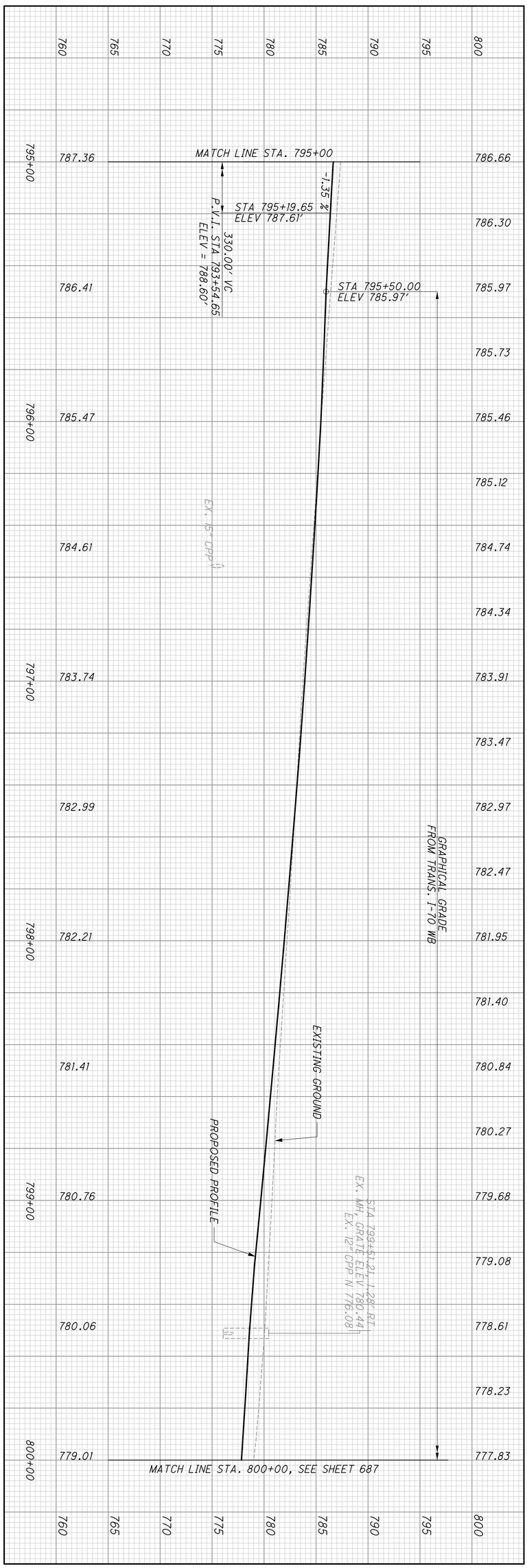

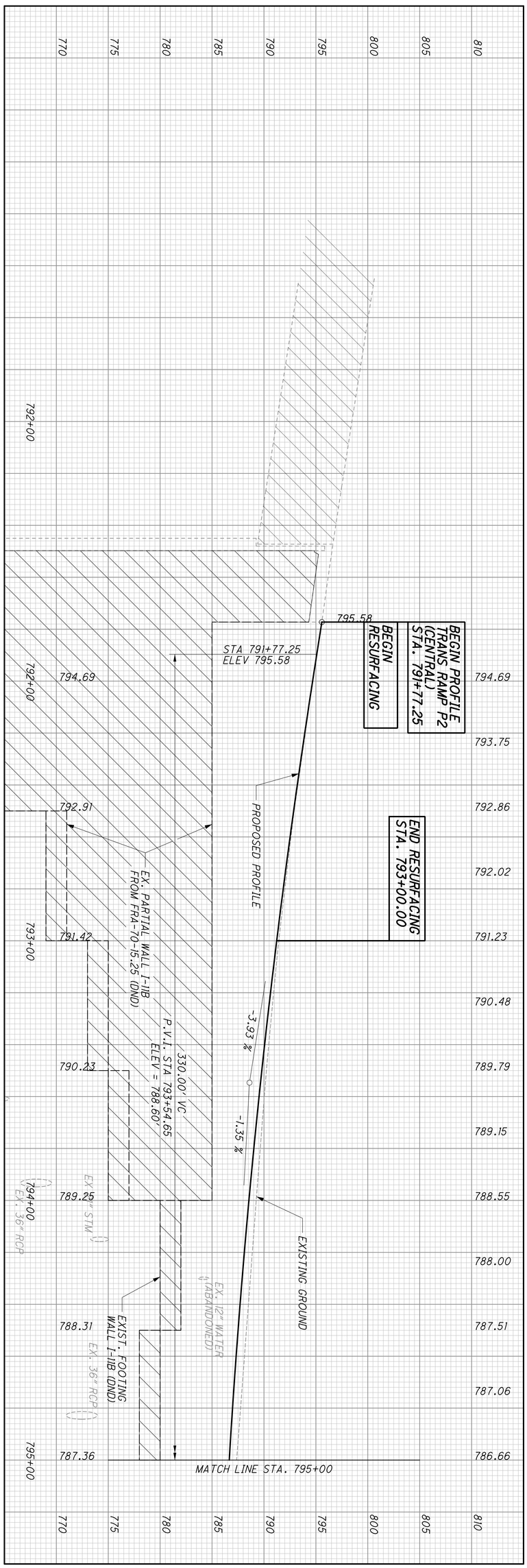

686
2317

FRA-70-14.54

PROFILE - TRANS. RAMP P2 (CENTRAL)
STA. 791+77.25 TO STA. 800+00.00

CALCULATED

CHECKED

ms consultants, inc.

34" x 22"

Model: 105322GF086 View: FENCE_VIEW1
Printed: 6/19/2018 @ 8:48:55 AM By: jdouglas
File: N:\03\60\06634_2E\roadway\sheets\105322GF086.dgn

Batchplot Spec: \\msconsultants.com\files\production\03\60\06634_2E\standards\plotdrv\batchplt.spc
Pen Table: N:\03\60\06634_2E\standards\tables\V8i_ms_std_06634_2D_Plan View.tbl
Plot Driver: \\msconsultants.com\files\Standards\ustn\ohdot\v8i\ms\plotting\PDF.pltcfg

0 1"
0.5"

DGF: ohdotV8i
PCF: 60-06634_2E_Columbus

Ohio DOT Workspace
70\71 East Interchange 2E

ms consultants, inc.
msconsultants.com

PLOT.CEL

www.msconsultants.com

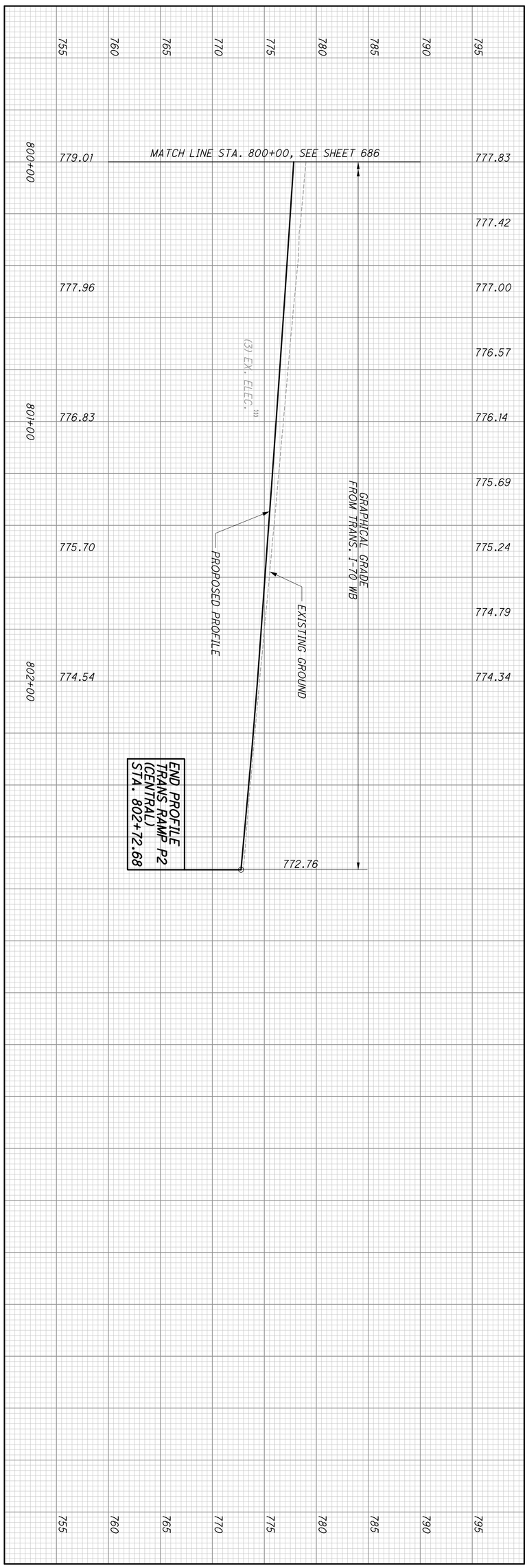

ms consultants, inc.

687
2317

FRA-70-14.54

PROFILE - TRANS. RAMP P2 (C)
STA. 800+00 TO 802+72.68

CALCULATED

CHECKED

PLOT.CEL

ms consultants, inc.
msconsultants.com

www.msconsultants.com
Ohio DOT Workspace
70\71 East Interchange 2E

0 0.5" 1"

PCF: 60-06634_2E_Columbus
ODF: ohdot\V8i

Batchplot Spec: \\msconsultants.com\files\production\03\60\06634_2E\standards\plotdr\batchplt.spc
Pen Table: N:\03\60\06634_2E\standards\tables\V8i_ms_std_06634_2D_Plan View.tbl
Plot Driver: \\msconsultants.com\files\Standards\ustn\ohdot\v8i\ms\plotting\PDF.pltclg

Model: 1053220F082 View: FENCE_VIEW1
Printed: 6/19/2018 @ 8:48:56 AM By: jdougas
File: N:\03\60\06634_2E\roadway\sheets\1053220F082.dgn

34" x 22"

CALCULATED

CHECKED

PROFILE - TRANS. I-70 WB (EAST)
STA. 217+58.34 TO 227+60.00

FRA-70-14.54

688
2317

ms consultants, inc.

PLOT.CEL
ms consultants, inc.
msconsultants.com
www.msconsultants.com
Ohio DOT Workspace
70\71 East Interchange 2E
PDF: ohdot\V8i
PCF: 60-06634_2E_Columbus
Batchplot Spec: \\msconsultants.com\files\production\03\60\06634_2E\standards\plotdr\batchplt.spc
Pen Table: N:\03\60\06634_2E\standards\tables\V8i_ms_std_06634_2D_Plan View.tbl
Plot Driver: \\msconsultants.com\files\Standards\ustn\ohdot\v8i\ms\plotting\PDF.pltcfg
Model: 1053220F083 @ 8:48:57 AM View: FENCE_VIEW1
Printed: 6/19/2018 By: jdouglas
File: N:\03\60\06634_2E\roadway\sheets\1053220F083.dgn
34" x 22"

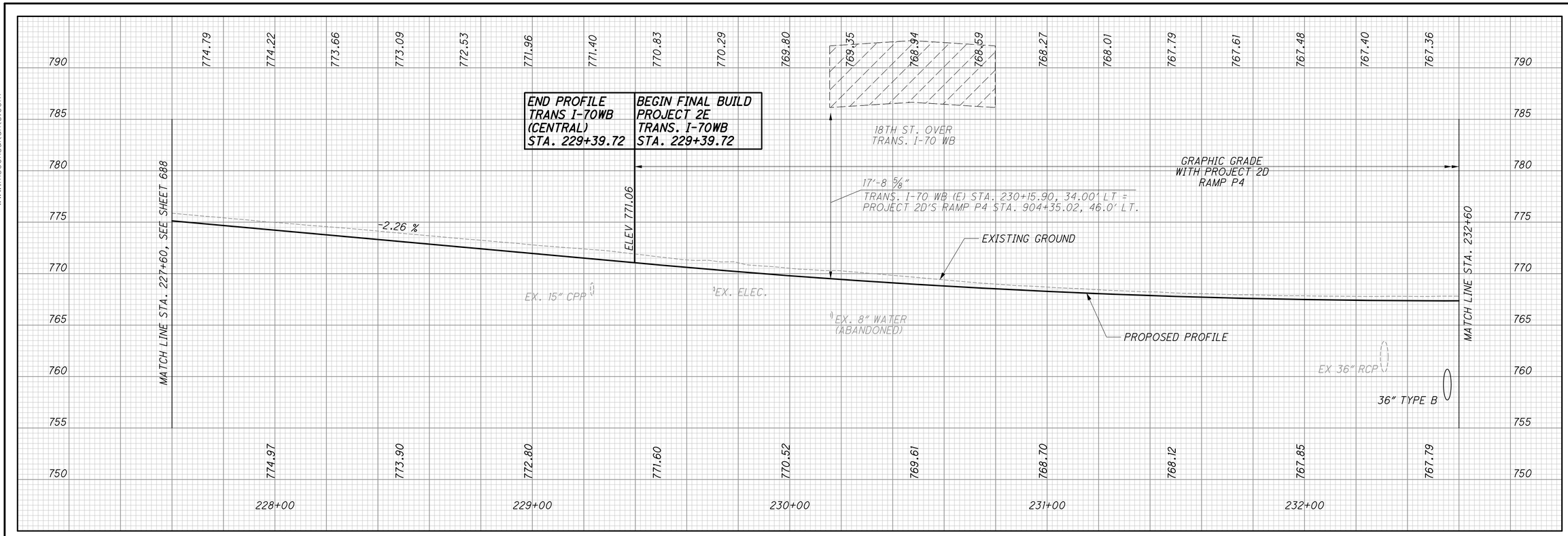

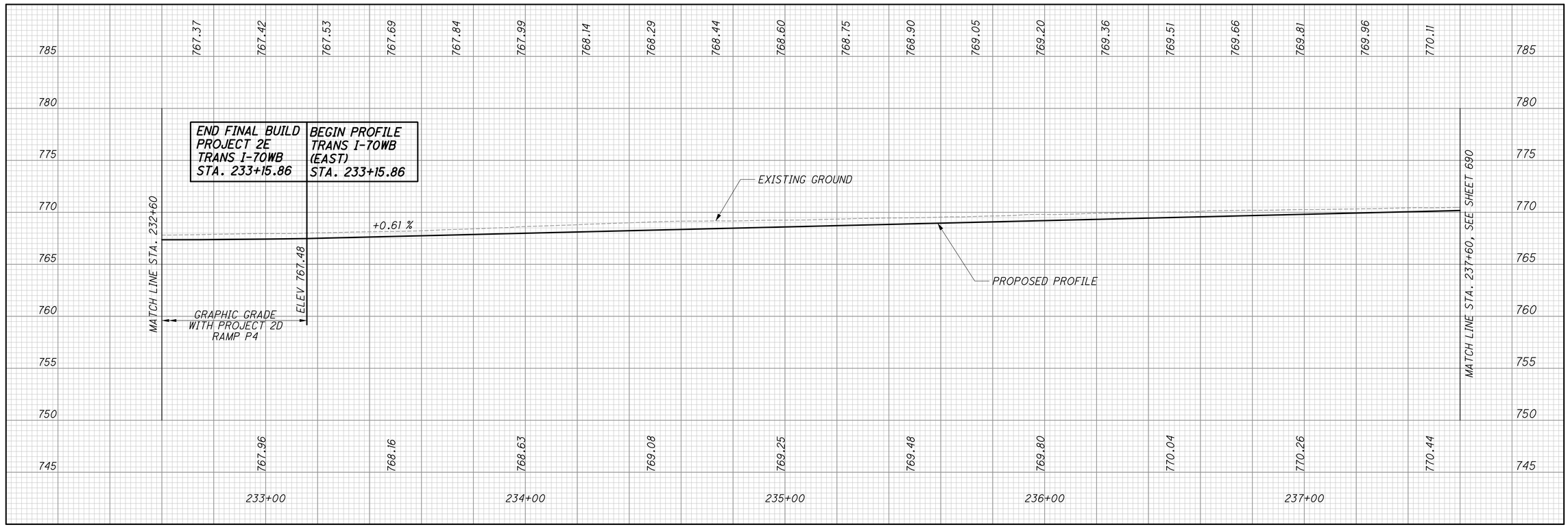

CALCULATED | CHECKED

PROFILE - TRANS. I-70 WB (EAST)
STA. 227+60.00 TO 237+60.00

FRA-70-14.54

689
2317

ms consultants, inc.

PLOT.CEL

ms consultants, inc.
msconsultants.com

www.msconsultants.com

Ohio DOT Workspace
70\71 East Interchange 2E

PDF: ohdot\V8i
PCF: 60-06634_2E_Columbus

0 0.5" 1"

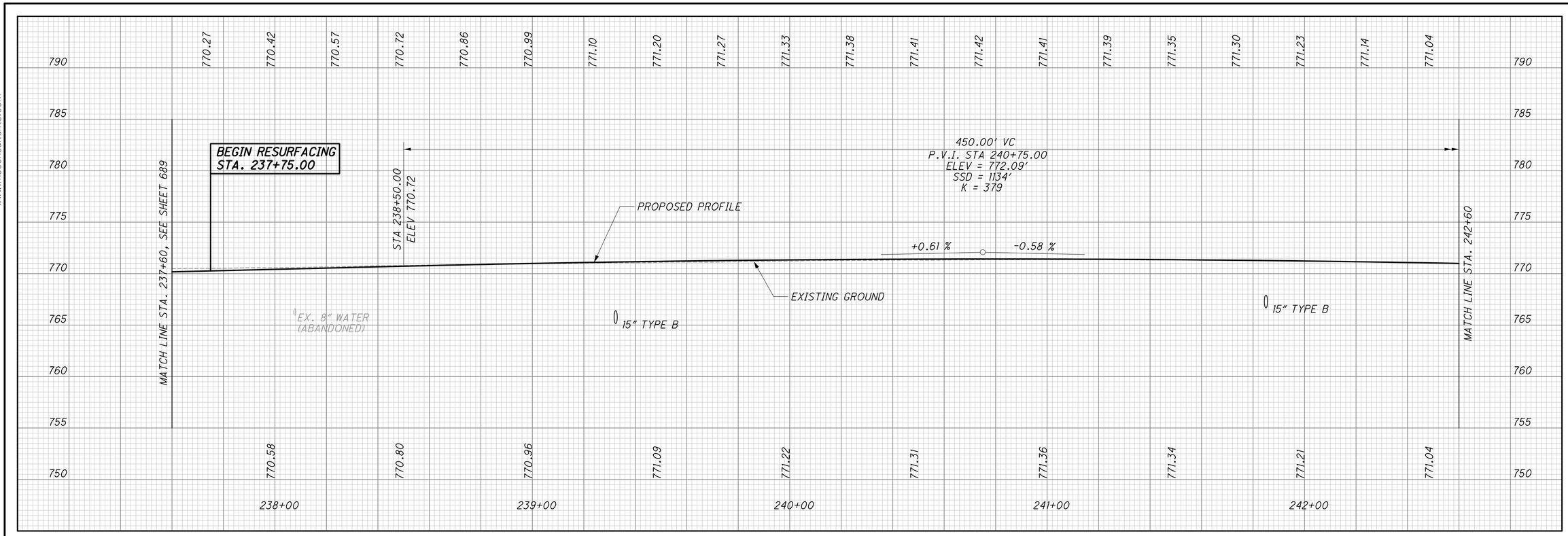

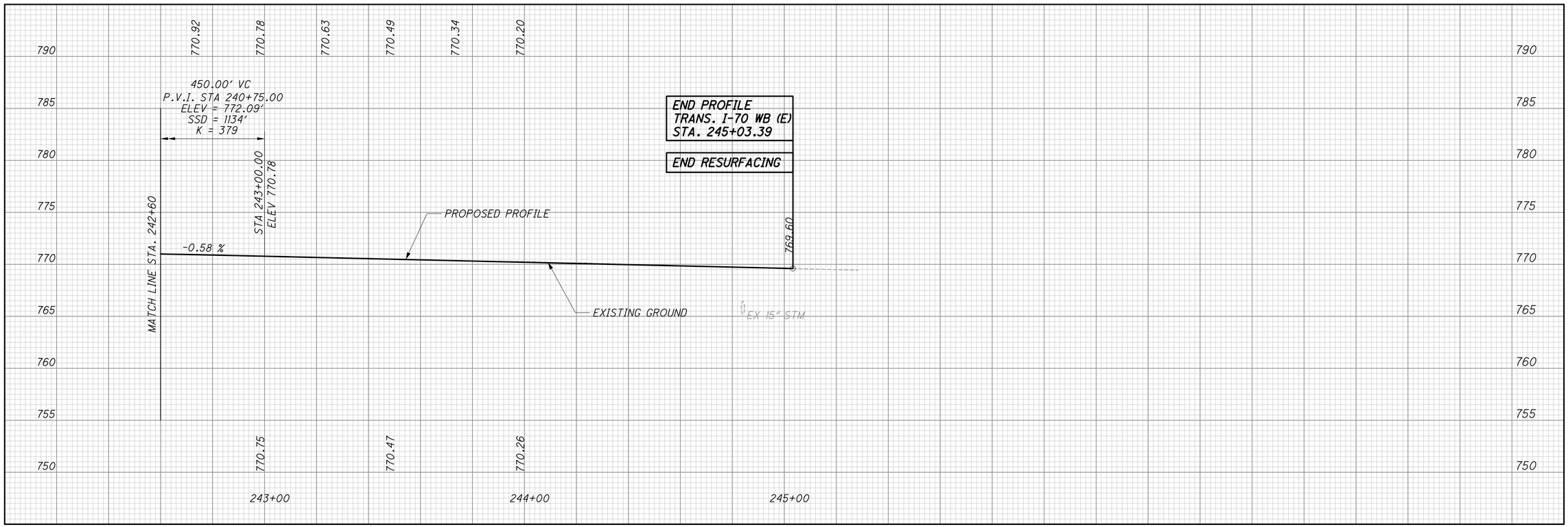

CALCULATED

CHECKED

PROFILE - TRANS. I-70 WB (EAST)
STA. 237+60.00 TO 245+00.00

FRA-70-14.54

690
2317

ms consultants, inc.

Batchplot Spec: \\msconsultants.com\files\production\03\60\06634_2E\standards\plotdr\batchplt.spc
Pen Table: N:\03\60\06634_2E\standards\tables\V8i_ms_std_06634_2D_Plan View.tbl
Plot Driver: \\msconsultants.com\files\Standards\ustn\ohdot\v8i\ms\plotting\PDF.pltcfg

Model: 1053220F084 @ 8:48:58 AM View: FENCE_VIEW1
Printed: 6/19/2018 By: jdouglas
File: N:\03\60\06634_2E\roadway\sheets\1053220F084.dgn

34" x 22"

34" x 22"
Model: 105322GF087 View: FENCE_VIEW1
Printed: 6/19/2018 @ 8:49:00 AM By: jdouglas
File: N:\03\60\06634_2E\roadway\sheets\105322GF087.dgn
Batchplot Spec: \\msconsultants.com\files\production\03\60\06634_2E\standards\plotdrv\batchplt.spc
Pen Table: N:\03\60\06634_2E\standards\tables\V8i_ms_std_06634_2D_Plan View.tbl
Plot Driver: \\msconsultants.com\files\Standards\ustn\ohdot\v8i\ms\plotting\PDF.pltcfg
DGF: ohdotV8i
PCF: 60-06634_2E_Columbus
Ohio DOT Workspace
70\71 East Interchange 2E
0 1" 0.5"
PLOT.CEL
ms consultants, inc.
msconsultants.com
www.msconsultants.com

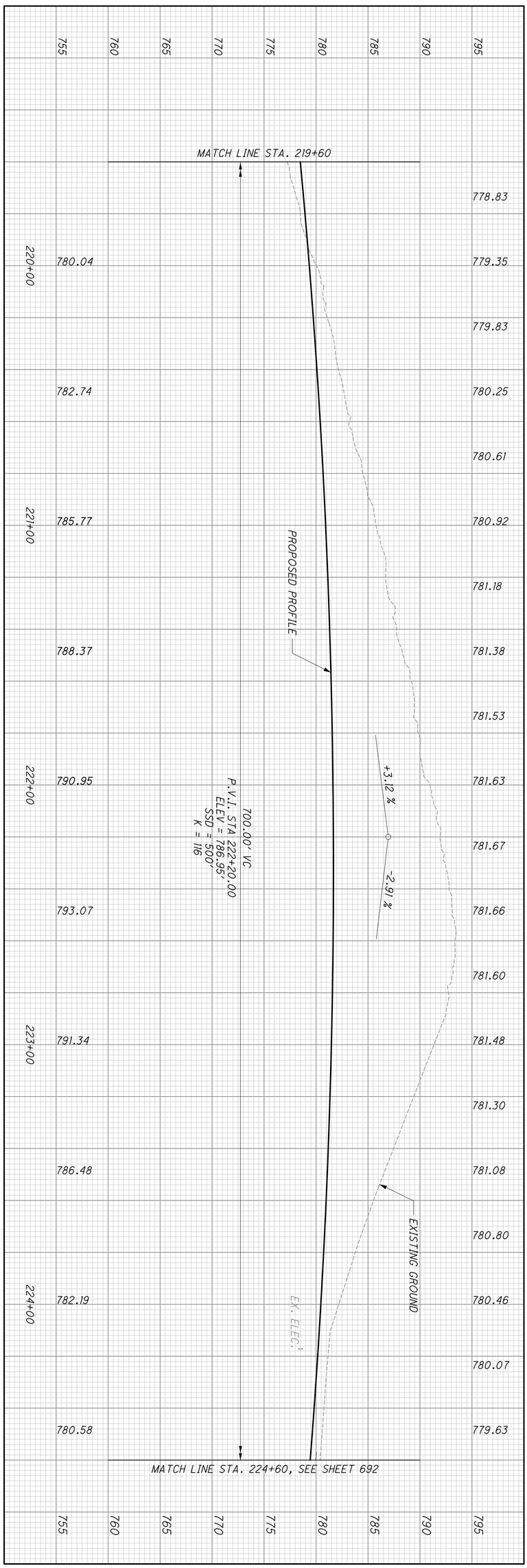

PLOT.CEL

ms consultants, inc.
msconsultants.com

www.msconsultants.com

Ohio DOT Workspace
70\71 East Interchange 2E

0 0.5" 1"

PDF: ohdot\V8i
PCF: 60-06634_2E_Columbus

Batchplot Spec: \\msconsultants.com\files\production\03\60\06634_2E\standards\plotdr\batchplt.spc
Pen Table: N:\03\60\06634_2E\standards\tables\V8i_ms_std_06634_2D_Plan View.tbl
Plot Driver: \\msconsultants.com\files\Standards\ustn\ohdot\v8i\ms\plotting\PDF.pltcfg

Model: 105322GF088
Printed: 6/19/2018 @ 8:49:01 AM
File: N:\03\60\06634_2E\roadway\sheets\105322GF088.dgn
View: FENCE_VIEW1
By: jdouglas

34" x 22"

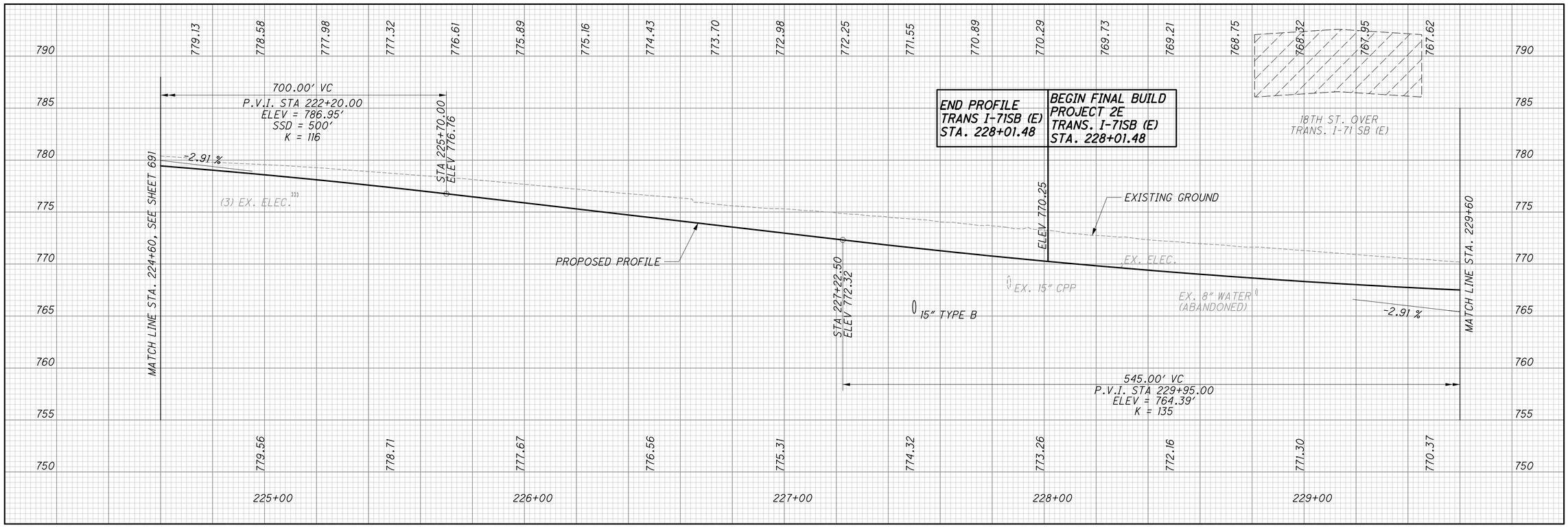

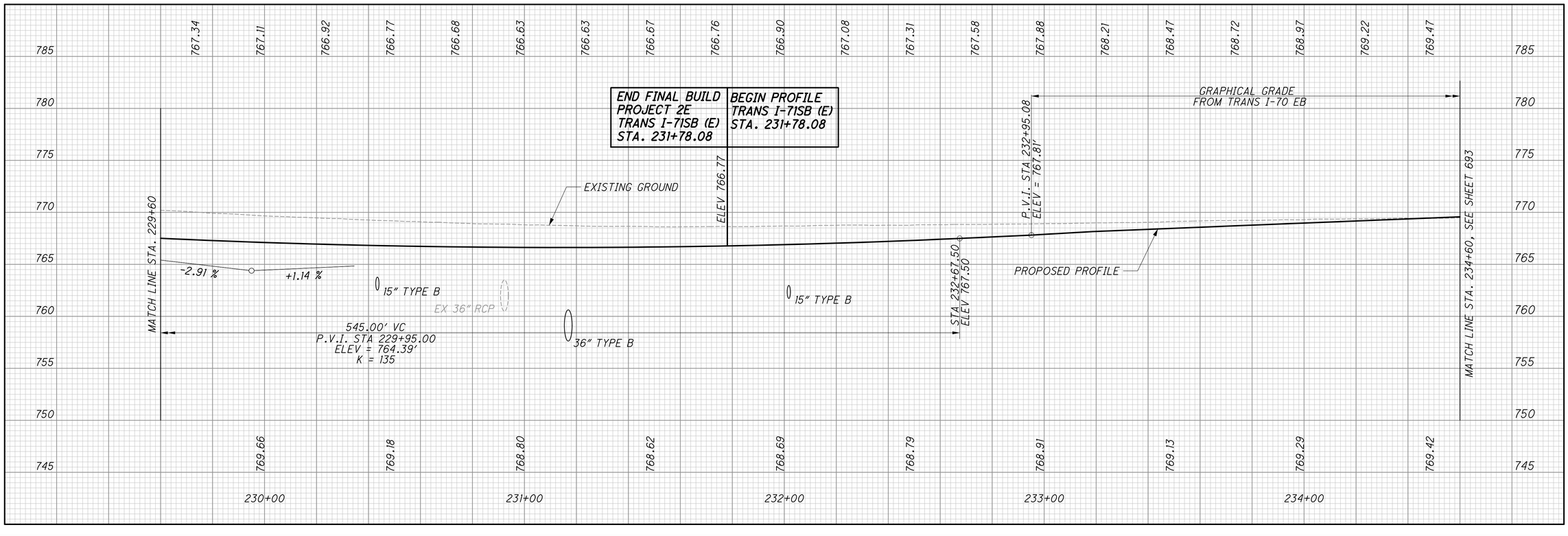

CALCULATED

CHECKED

PROFILE - TRANS. I-71 SB (E)
STA. 224+60.00 TO 234+60.00

FRA-70-14.54

692
2317

ms consultants, inc.

34" x 22"

Model: 105322GF089 View: FENCE_VIEW1
Printed: 6/19/2018 @ 8:49:02 AM By: jdouglas
File: N:\03\60\06634_2E\roadway\sheets\105322GF089.dgn

Batchplot Spec: \\msconsultants.com\files\production\03\60\06634_2E\standards\plotdrv\batchplt.spc
Pen Table: N:\03\60\06634_2E\standards\tables\V8i_ms_std_06634_2D_Plan View.tbl
Plot Driver: \\msconsultants.com\files\Standards\ustn\ohdot\v8i\ms\plotting\PDF.pltcfg

0 1"
0.5"

DGN: ohdotV8i
PCF: 60-06634_2E_Columbus

Ohio DOT Workspace
70\71 East Interchange 2E

PLOT.CEL

ms consultants, inc.
msconsultants.com

www.msconsultants.com

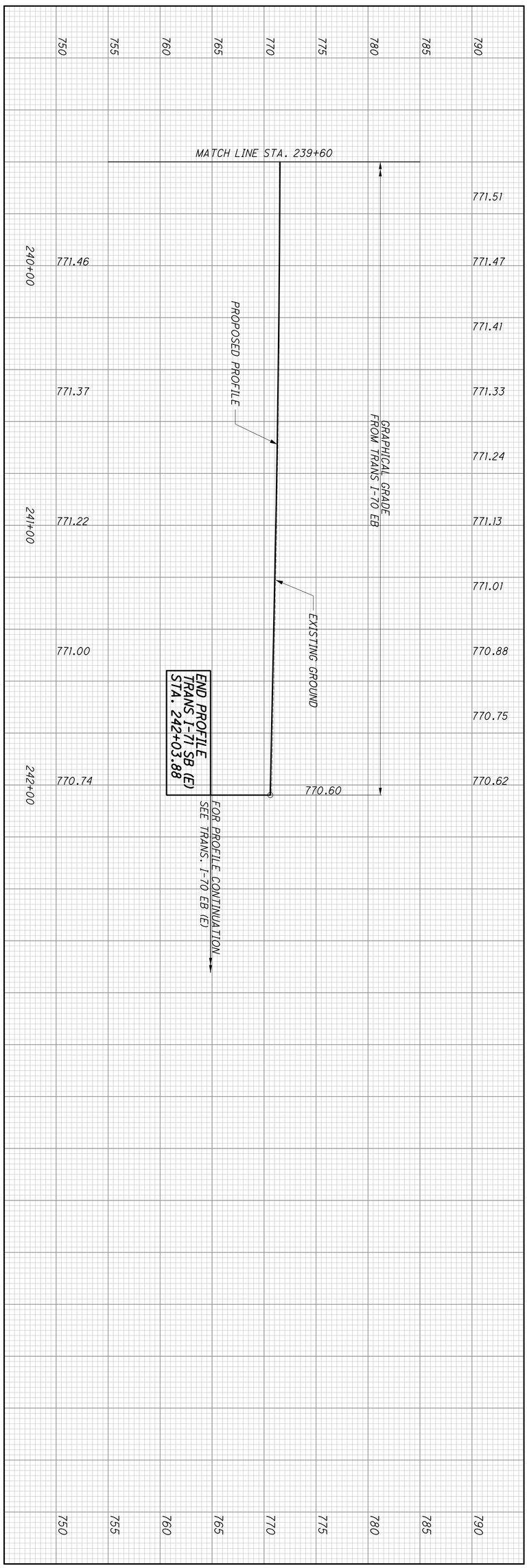

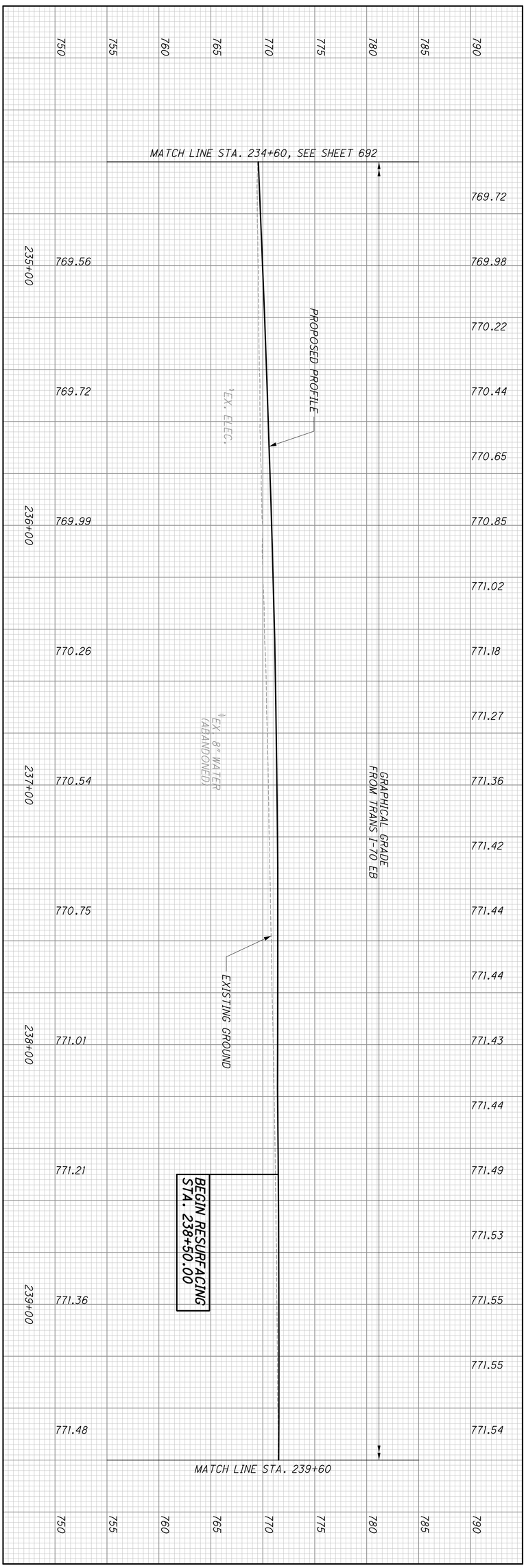

693
2317

FRA-70-14.54

PROFILE - TRANS. I-71 SB (E)
STA. 234+60.00 TO 242+03.88

CALCULATED

CHECKED

ms consultants, inc.

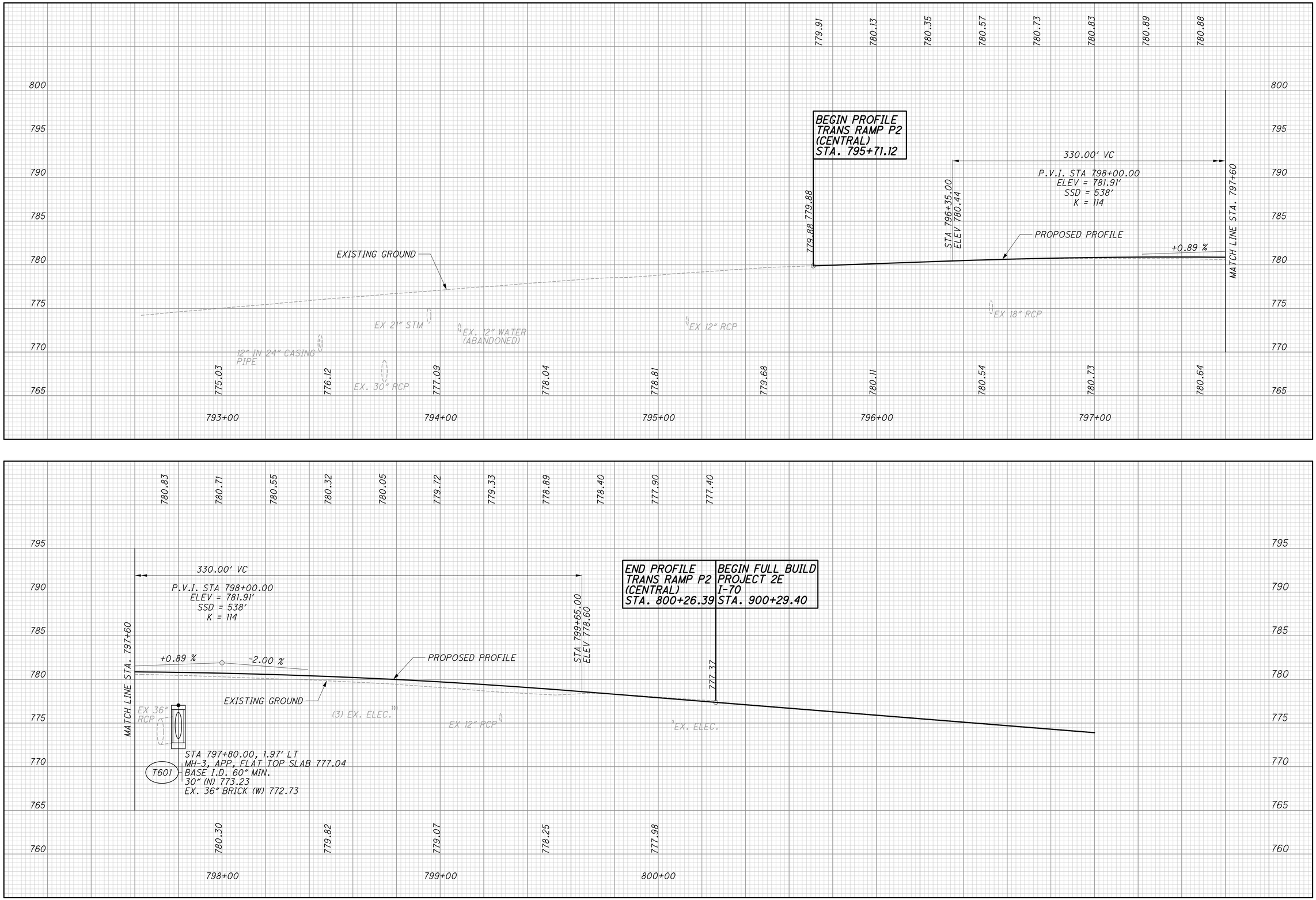

PROFILE - TRANS. I-71 NB
STA. 795+71.12 TO STA. 800+26.39

FRA-70-14.54

694
2317

CALCULATED
CHECKED

ms consultants, inc.
msconsultants.com

Ohio DOT Workspace
70\71 East Interchange 2E
www.msconsultants.com

Batchplot Spec: \\msconsultants.com\files\production\03\60\06634_2E\standards\plotdrv\batchplt.spc
Pen Table: N:\03\60\06634_2E\standards\tables\V8i_ms_std_06634_2D_Plan View.tbl
Plot Driver: \\msconsultants.com\files\Standards\ustn\ohdot\v8i\ms\plotting\PDF.pltcfg

34" x 22"

Model: 105322GF090 View: FENCE_VIEW1
Printed: 6/19/2018 @ 8:49:04 AM By: jdouglas
File: N:\03\60\06634_2E\roadway\sheets\105322GF090.dgn

ms consultants, inc.

PLOT.CEL

ms consultants, inc.
msconsultants.com

www.msconsultants.com

Ohio DOT Workspace
70\71 East Interchange 2E

0 0.5" 1"

DGN: ohdot\V8i
PCF: 60-06634_2E_Columbus

Batchplot Spec: \\msconsultants.com\files\production\03\60\06634_2E\standards\plotdr\batchplt.spc
Pen Table: N:\03\60\06634_2E\standards\tables\V8i_ms_std_06634_2D_Plan View.tbl
Plot Driver: \\msconsultants.com\files\Standards\usetn\ohdot\v8i\ms\plotting\PDF.pltcfg

34" x 22"

Model: Sheet
Printed: 6/19/2018 @ 8:49:06 AM
File: N:\03\60\06634_2E\roadway\sheets\105322GF051.dgn

View: FENCE_VIEW1
By: jdouglas

783.90 783.40 782.90 782.40 781.90 781.40 780.90 780.40 779.90 779.40 778.90 778.40 777.90 777.40 776.90 776.40 775.90 775.40 774.90 774.40 773.90

820 815 810 805 800 795 790 785 780 775 770 765 760 755 750 745 740

FUTURE PROJECT 2D
FRA-70-14.48

BEGIN WORK
RAMP P2
STA. 900+26.40

SEE TRANSITIONAL PROFILE:
TRANS. I-71 NB, SEE SHEET 694

FUTURE PROJECT 2D
PROPOSED PROFILE

PROPOSED PROFILE
RAMP P2

777.37

MATCH LINE STA. 902+00.00 SEE SHEET 696

781.12 780.65 780.03 779.19 778.31 777.98 777.26 777.72 779.33 779.09

897+00 898+00 899+00 900+00 901+00 902+00

CALCULATED | CHECKED

PROFILE - RAMP P2

STA. 897+00.00 TO STA. 902+00.00

FRA-70-14.54

695
2317

ms consultants, inc.

34" x 22"

Model: Sheet
Printed: 6/19/2018 @ 8:49:08 AM
File: N:\03\60\06634_2E\roadway\sheets\1053220F052.dgn
View: FENCE_VIEW1
By: jdouglas

Batchplot Spec: \\msconsultants.com\files\production\03\60\06634_2E\standards\plotdrv\batchplt.spc
Pen Table: N:\03\60\06634_2E\standards\tables\V8i_ms_std_06634_2D_Plan View.tbl
Plot Driver: \\msconsultants.com\files\Standards\ustn\ohdot\v8i\ms\plotting\PDF.pltcfg
DGN: ohdotV8i
PCF: 60-06634_2E_Columbus
Ohio DOT Workspace
70\71 East Interchange 2E

ms consultants, inc.
msconsultants.com
www.msconsultants.com
PLOT.CEL

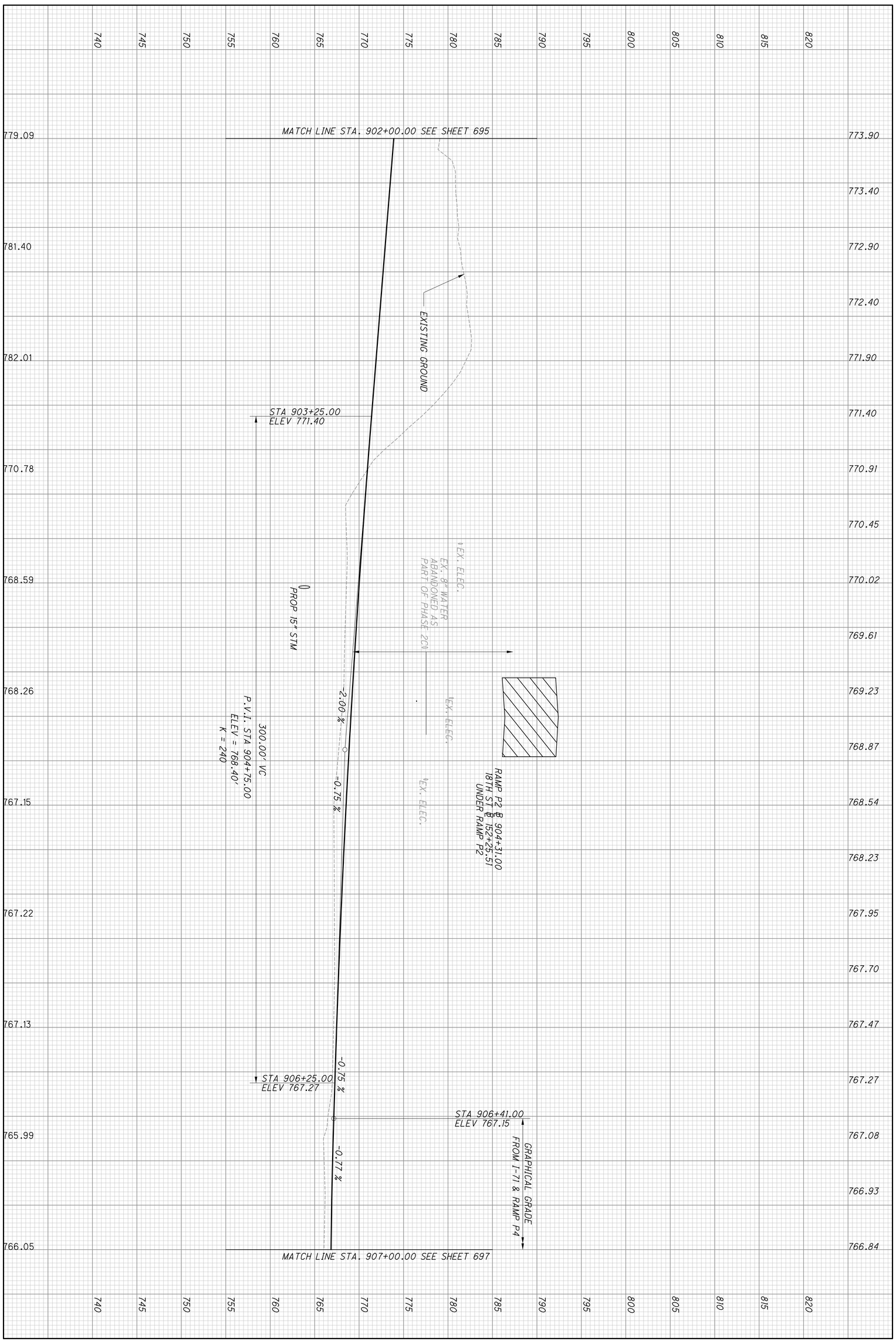

FRA-70-14.54

PROFILE - RAMP P2
STA. 902+00.00 TO STA. 907+00.00

CALCULATED
CHECKED

ms consultants, inc.

PLOT.CEL

ms consultants, inc.
msconsultants.com

www.msconsultants.com

Ohio DOT Workspace
70\71 East Interchange 2E

0 1" 0.5"

CPF: ohdot\V8i
PCF: 60-06634_2E_Columbus

Batchplot Spec: \\msconsultants.com\files\production\03\60\06634_2E\standards\plotdrv\batchplt.spc
Pen Table: N:\03\60\06634_2E\standards\tables\V8i_ms_std_06634_2D_Plan View.tbl
Plot Driver: \\msconsultants.com\files\Standards\ustn\ohdot\v8i\ms\plotting\PDF.pltcfg

34" x 22"

Model: Sheet
Printed: 6/19/2018 @ 8:49:10 AM
File: N:\03\60\06634_2E\roadway\sheets\005220f053.dgn

View: FENCE_VIEW1
By: jdougles

766.84 766.80 766.81 766.90 767.10 767.32 767.54 767.77 767.99 768.17 768.33 768.54 768.74 768.92 769.09 769.24 769.38 769.49 769.59 769.68 769.75

820 815 810 805 800 795 790 785 780 775 770 765 760 755 750 745 740

END PROJECT
RAMP P2
STA. 907+33.78

FUTURE
PROJECT 5
FRA-70-15.29

SEE TRANSITIONAL PROFILE:
RAMP P2, EAST TRANSITION
SEE SHEET 698

GRAPHICAL GRADE
FROM I-71 & RAMP P4

MATCH LINE STA. 907+00.00 SEE SHEET 696

STA 909+14.22, 9.92' RT
EX. MH, T.C. ELEV 767.74 (TBR)
EX. 27" RCP W 762.54
EX. 24" RCP E 762.64
EX. 15" CMP N 763.74
EX. 12" RCP SE 764.39

FUTURE PROJECT 5
PROPOSED PROFILE

EXISTING GROUND

PROPOSED PROFILE
RAMP P2

PROP 22" x 34" STM

EX. 27" RCP

EX. 24" RCP

EX. UNK STM

766.05 765.90 766.03 766.44 770.19 770.34 769.82 769.53 769.44 769.29 769.60

907+00 908+00 909+00 910+00 911+00 912+00

CALCULATED | CHECKED

PROFILE - RAMP P2
STA. 907+00.00 TO STA. 907+33.78

FRA-70-14.54

697
2317

ms consultants, inc.

PLOT.CEL

ms consultants, inc.
msconsultants.com

www.msconsultants.com

Ohio DOT Workspace
70\71 East Interchange 2E

0 0.5" 1"

PCF: 60-06634_2E_Columbus
DF: ohdot\V8i

Batchplot Spec: \\msconsultants.com\files\production\03\60\06634_2E\standards\plotdir\batchplt.spc
Pen Table: N:\03\60\06634_2E\standards\tables\V8i_ms_std_06634_2D_Plan View.tbl
Plot Driver: \\msconsultants.com\files\Standards\ustn\ohdot\v8i\ms\plotting\PDF.pltcfg

Model: 1053220F091
Printed: 6/19/2018 @ 8:49:11 AM
File: N:\03\60\06634_2E\roadway\sheets\1053220F091.dgn

View: FENCE_VIEW1
By: jdouglas

34" x 22"

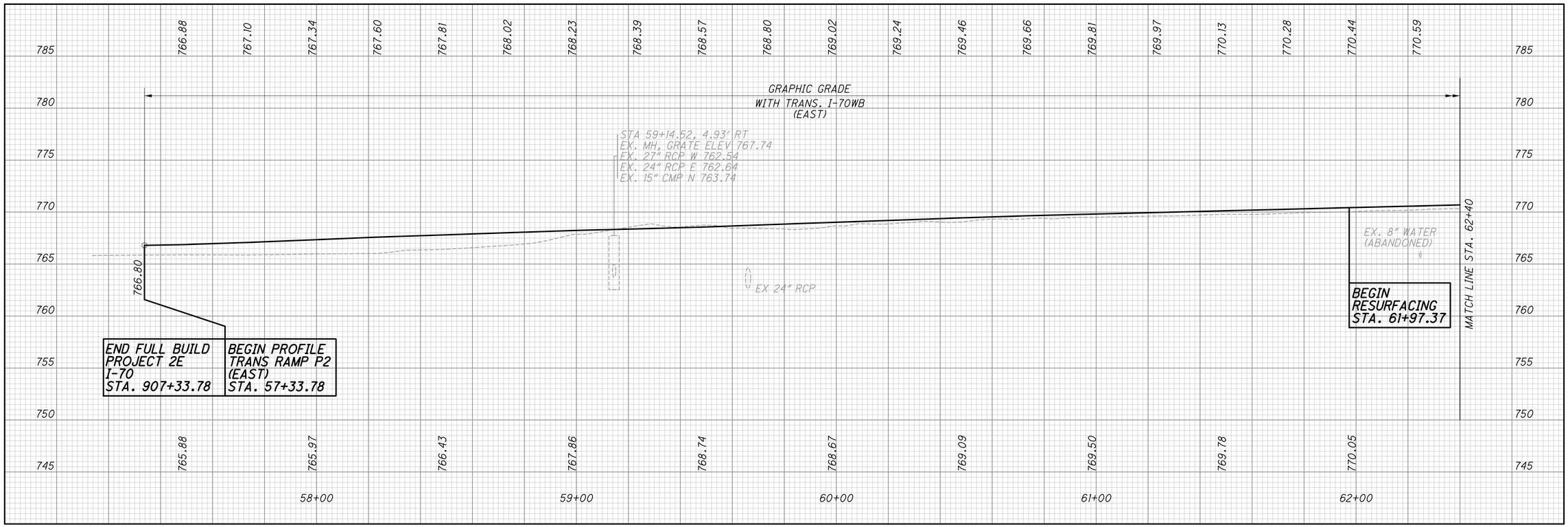

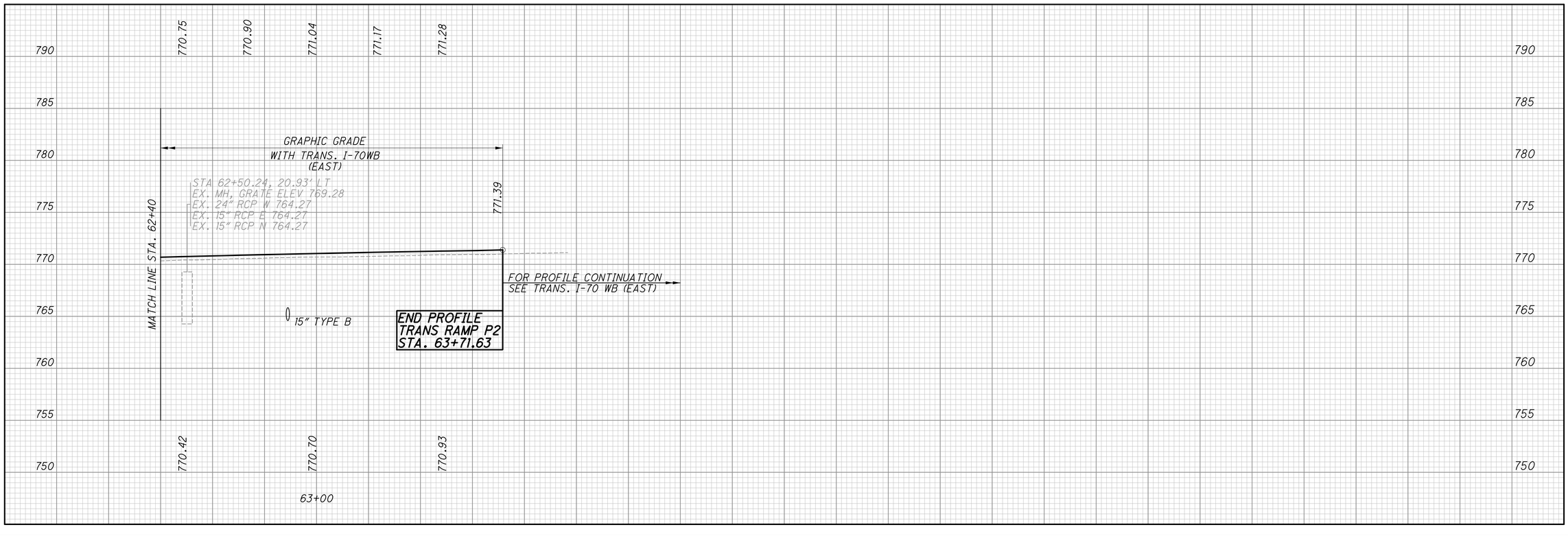

CALCULATED | CHECKED

PROFILE - TRANS. RAMP P2 (EAST)
STA. 57+33.78 TO 63+71.63

FRA-70-14.54

698
2317

ms consultants, inc.

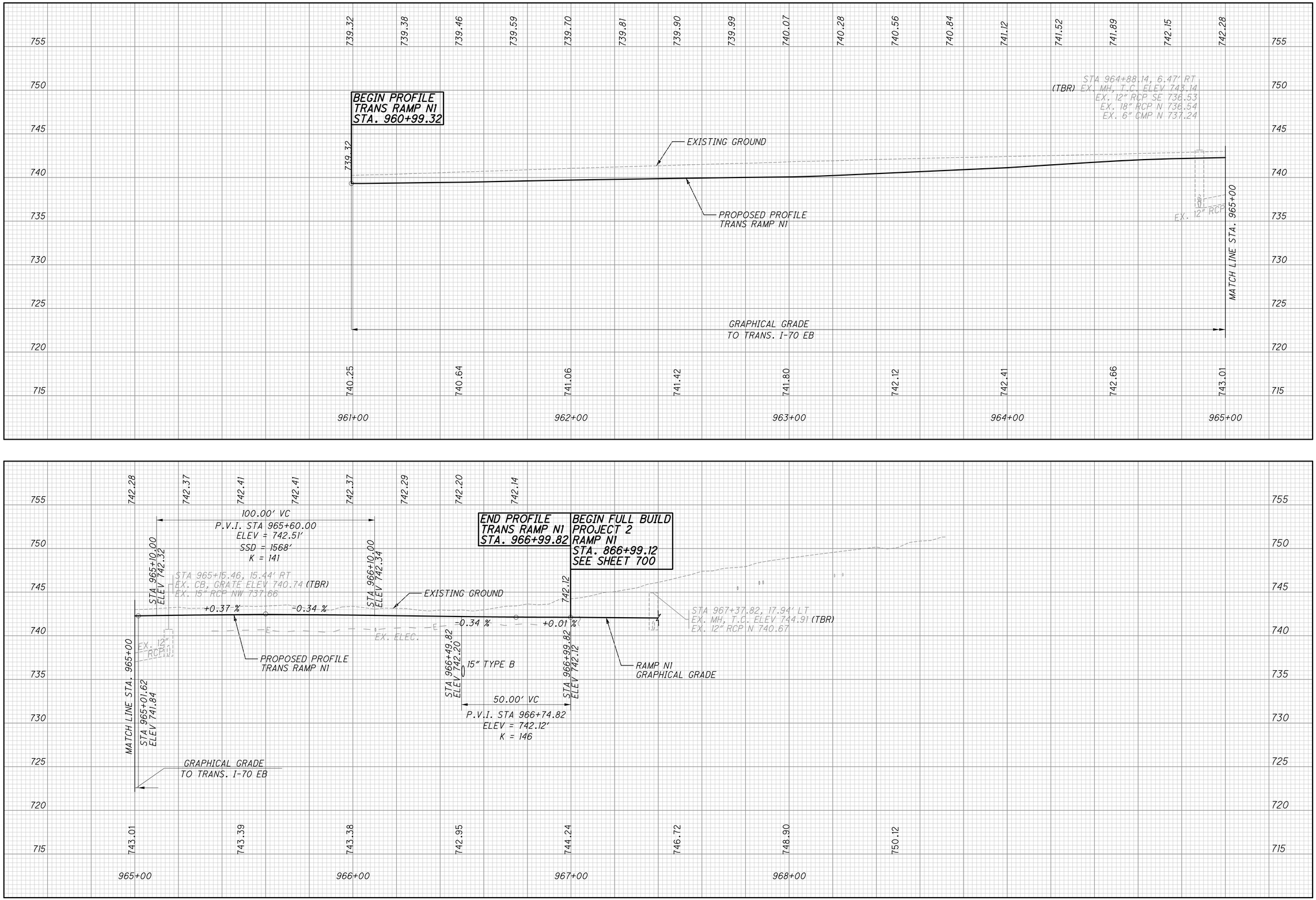

PLOT.CEL

ms consultants, inc.
msconsultants.com

Ohio DOT Workspace
70\71 East Interchange 2E
www.msconsultants.com

Batchplot Spec: \\msconsultants.com\files\production\03\60\06634_2E\standards\plotdrv\batchplt.spc
Pen Table: N:\03\60\06634_2E\standards\tables\V8i_ms_std_06634_2D_Plan View.tbl
Plot Driver: \\msconsultants.com\files\Standards\ustn\ohdot\v8i\ms\plotting\PDF.pltcfg

34" x 22"

Model: Sheet View: FENCE_VIEW1
Printed: 6/19/2018 @ 8:49:13 AM By: jdouglas
File: N:\03\60\06634_2E\roadway\sheets\105322GF040.dgn

CALCULATED
CHECKED

PROFILE - RAMP N1 - TRANSITIONAL PAVEMENT
STA. 960+99.32 TO STA. 966+99.82

FRA-70-14.54

ms consultants, inc.

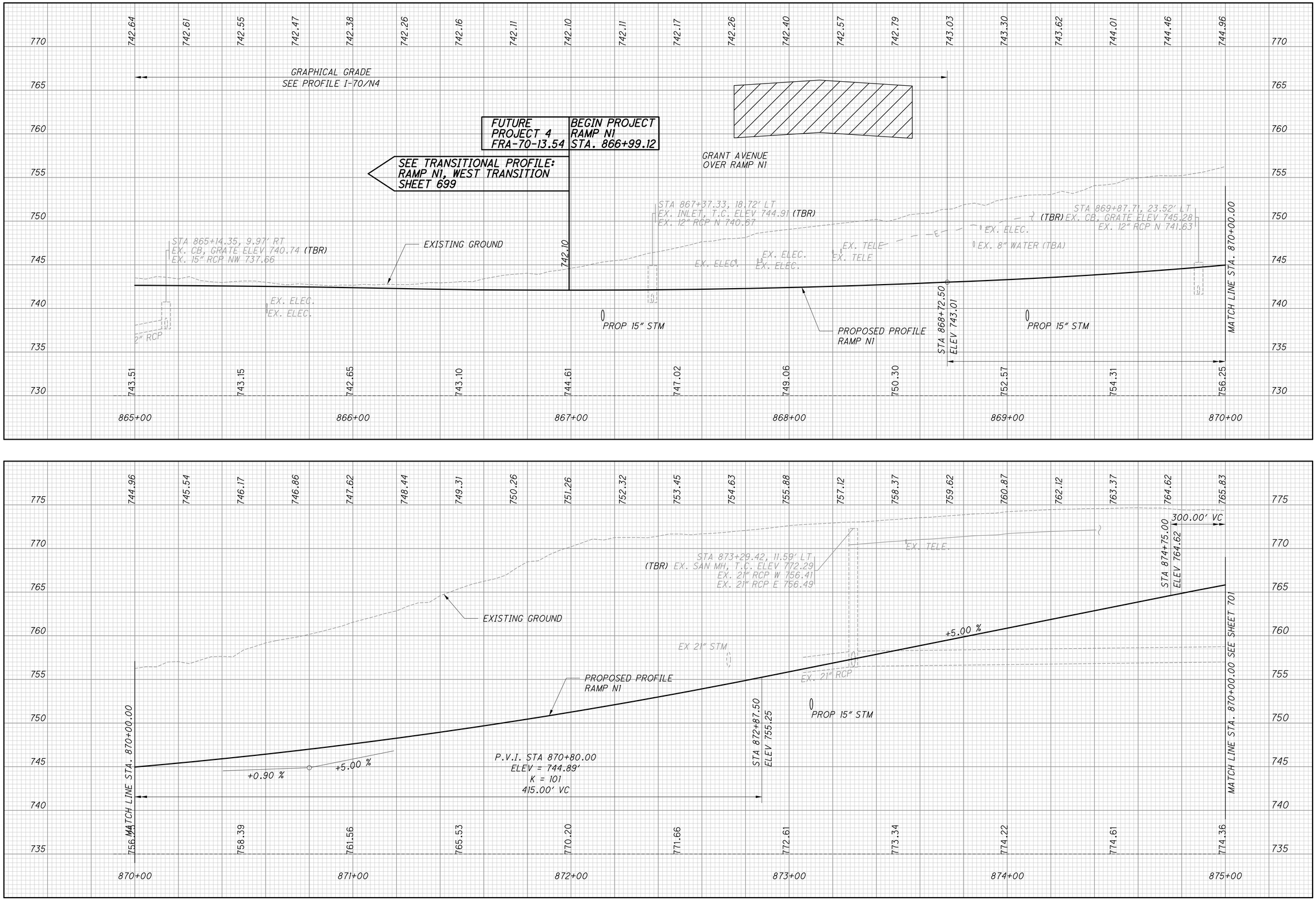

PLOT.CEL

ms consultants, inc.
msconsultants.com

Ohio DOT Workspace
70\71 East Interchange 2E
www.msconsultants.com

Batchplot Spec: \\msconsultants.com\files\production\03\60\06634_2E\standards\plotdrv\batchplt.spc
Pen Table: N:\03\60\06634_2E\standards\tables\V8i_ms_std_06634_2D_Plan View.tbl
Plot Driver: \\msconsultants.com\files\Standards\ustn\ohdot\v8i\ms\plotting\PDF.pltcfg

34" x 22"

Model: Sheet
Printed: 6/19/2018 @ 8:49:15 AM
File: N:\03\60\06634_2E\roadway\sheets\105322GF041.dgn
View: FENCE_VIEW1
By: jdouglas

CALCULATED
CHECKED

PROFILE - RAMP N1
STA. 886+99.18 TO STA. 875+00.00

FRA-70-14.54

700
2317

ms consultants, inc.

PLOT.CEL

ms consultants, inc.
msconsultants.com

www.msconsultants.com

Ohio DOT Workspace
70\71 East Interchange 2E

PCF: 60-06634_2E_Columbus

Batchplot Spec: \\msconsultants.com\files\production\03\60\06634_2E\standards\plotdrv\batchplt.spc
Pen Table: N:\03\60\06634_2E\standards\tables\V8i_ms_std_06634_2D_Plan View.tbl
Plot Driver: \\msconsultants.com\files\Standards\ustn\ohdot\v8i\ms\plotting\PDF.pltcfg

Model: Sheet @ 8:49:17 AM View: FENCE_VIEW1
Printed: 6/19/2018 By: jdouglas
File: N:\03\60\06634_2E\roadway\sheets\05322GF042.dgn

34" x 22"

CALCULATED | CHECKED

PROFILE - RAMP N1
STA. 875+00.00 TO STA. 885+00.00

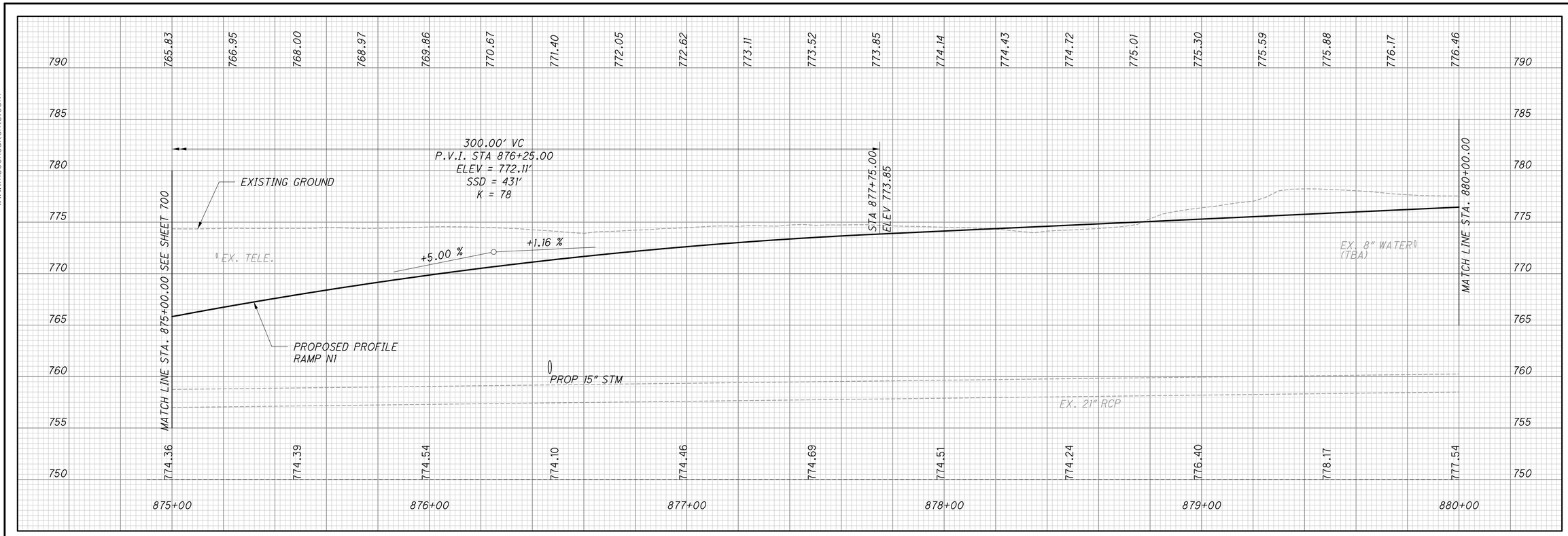

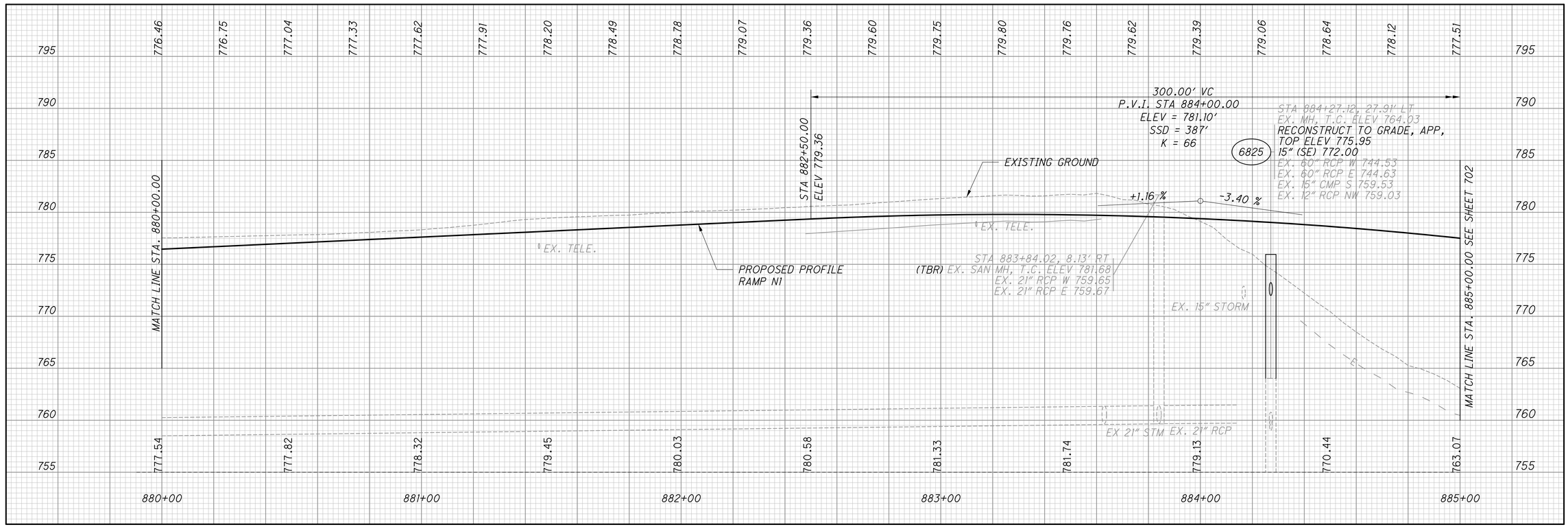

FRA-70-14.54

701
2317

ms consultants, inc.

34" x 22"

Model: Sheet
Printed: 6/19/2018 @ 8:49:19 AM
File: N:\03\60\06634_2E\roadway\sheets\1053222F043.dgn

View: FENCE_VIEW1
By: jdouglas

Batchplot Spec: \\msconsultants.com\files\production\03\60\06634_2E\standards\plotdrv\batchplt.spc
Pen Table: N:\03\60\06634_2E\standards\tables\V8i_ms_std_06634_2D_Plan View.tbl
Plot Driver: \\msconsultants.com\files\Standards\ustn\ohdot\v8i\ms\plotting\PDF.pltcfg

0 1" 0.5"

DGN: ohdotV8i
PCF: 60-06634_2E_Columbus

Ohio DOT Workspace
70\71 East Interchange 2E

ms consultants, inc.
msconsultants.com
www.msconsultants.com

PLOT.CEL

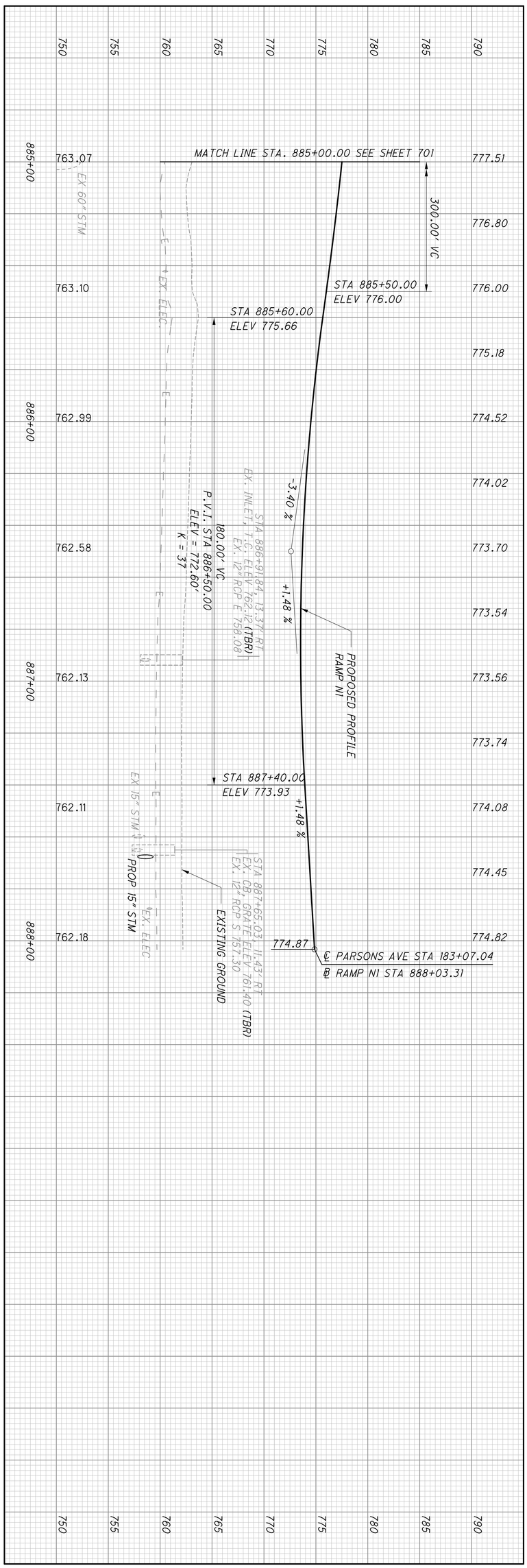

702 / 2317	**FRA-70-14.54**	**PROFILE - RAMP N1** **STA. 885+00.00 TO STA. 888+03.31**

CALCULATED
CHECKED

ms consultants, inc.

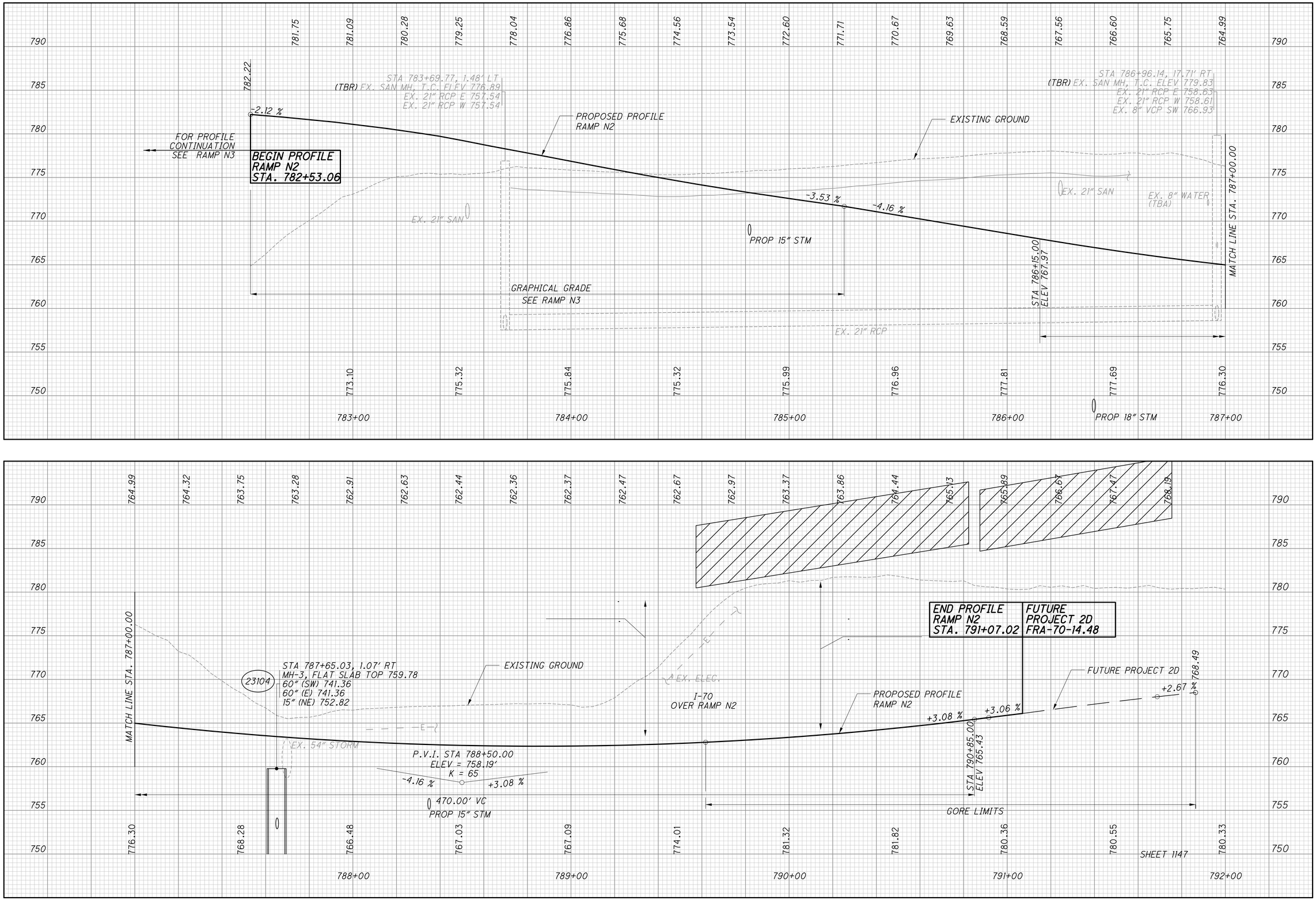

PLOT.CEL

ms consultants, inc.
msconsultants.com

Ohio DOT Workspace
70\71 East Interchange 2E
www.msconsultants.com

Batchplot Spec: \\msconsultants.com\files\production\03\60\06634_2E\standards\plotdrv\batchplt.spc
Pen Table: N:\03\60\06634_2E\standards\tables\V8i_ms_std_06634_2D_Plan View.tbl
Plot Driver: \\msconsultants.com\files\Standards\ustn\ohdot\v8i\ms\plotting\PDF.pltcfg

34" x 22"

View: FENCE_VIEW1
By: jdouglas
Model: Sheet
Printed: 6/19/2018 @ 8:49:21 AM
File: N:\03\60\06634_2E\roadway\sheets\105322GF044.dgn

CALCULATED
CHECKED

PROFILE - RAMP N2
STA. 787+00.00 TO STA. 792+00.00

FRA-70-14.54

703
2317

ms consultants, inc.

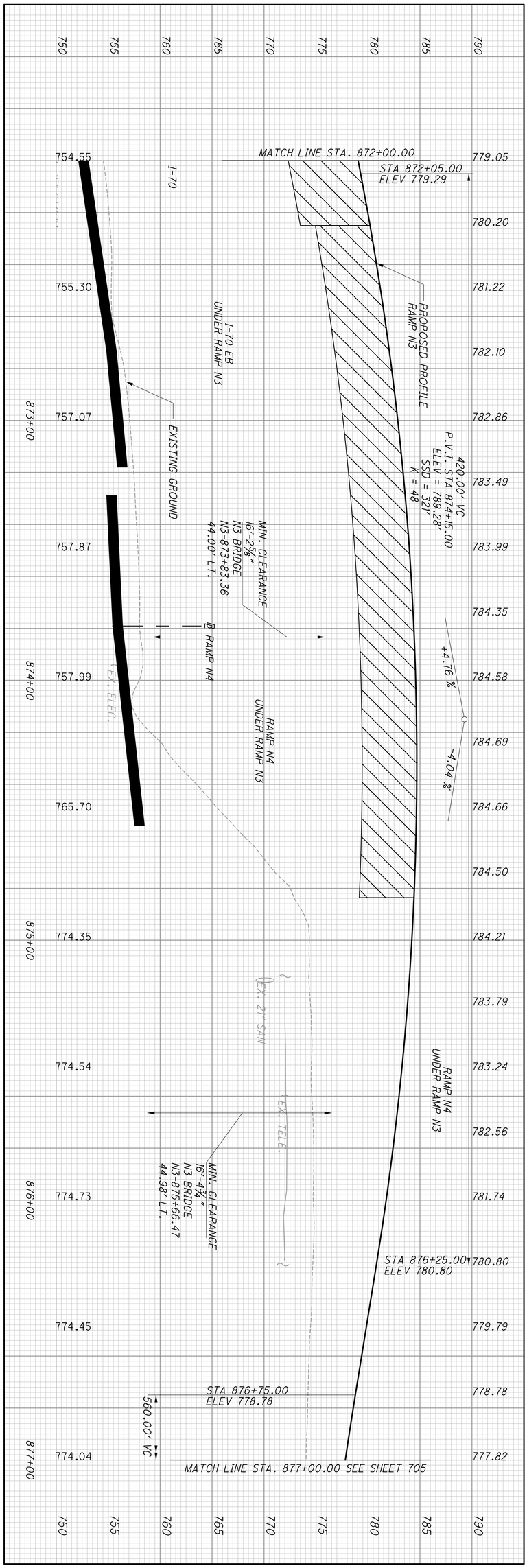

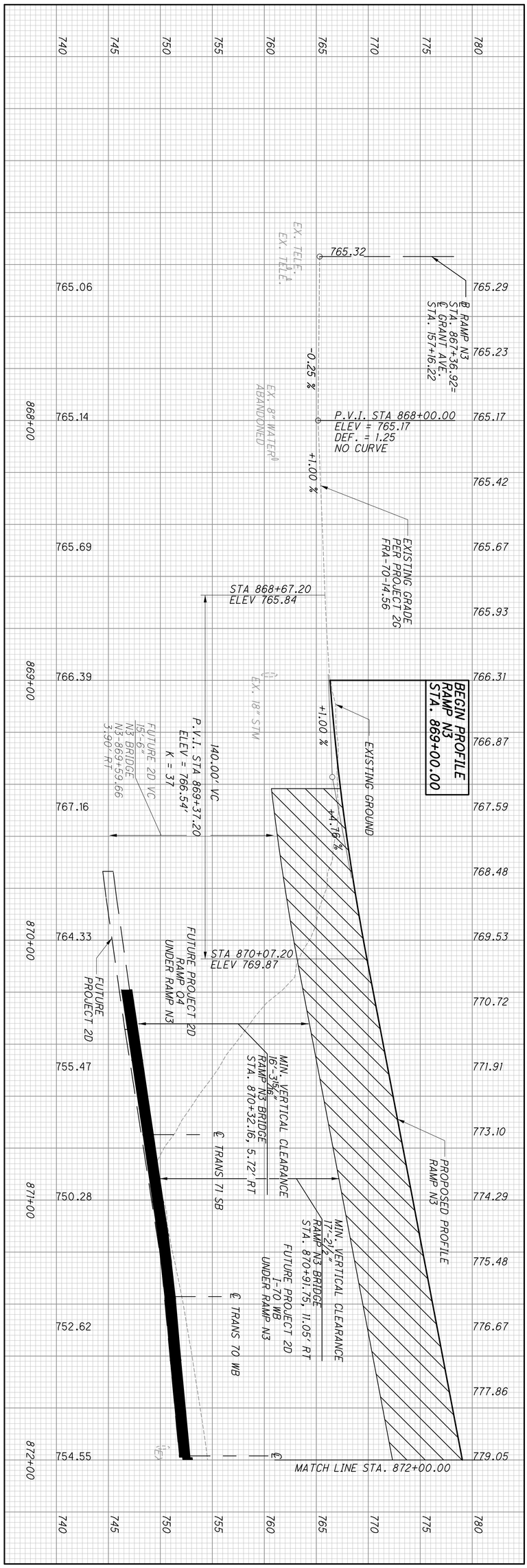

704
2317

FRA-70-14.54

PROFILE - RAMP N3
STA. 867+36.92 TO STA. 877+00.00

CALCULATED
CHECKED

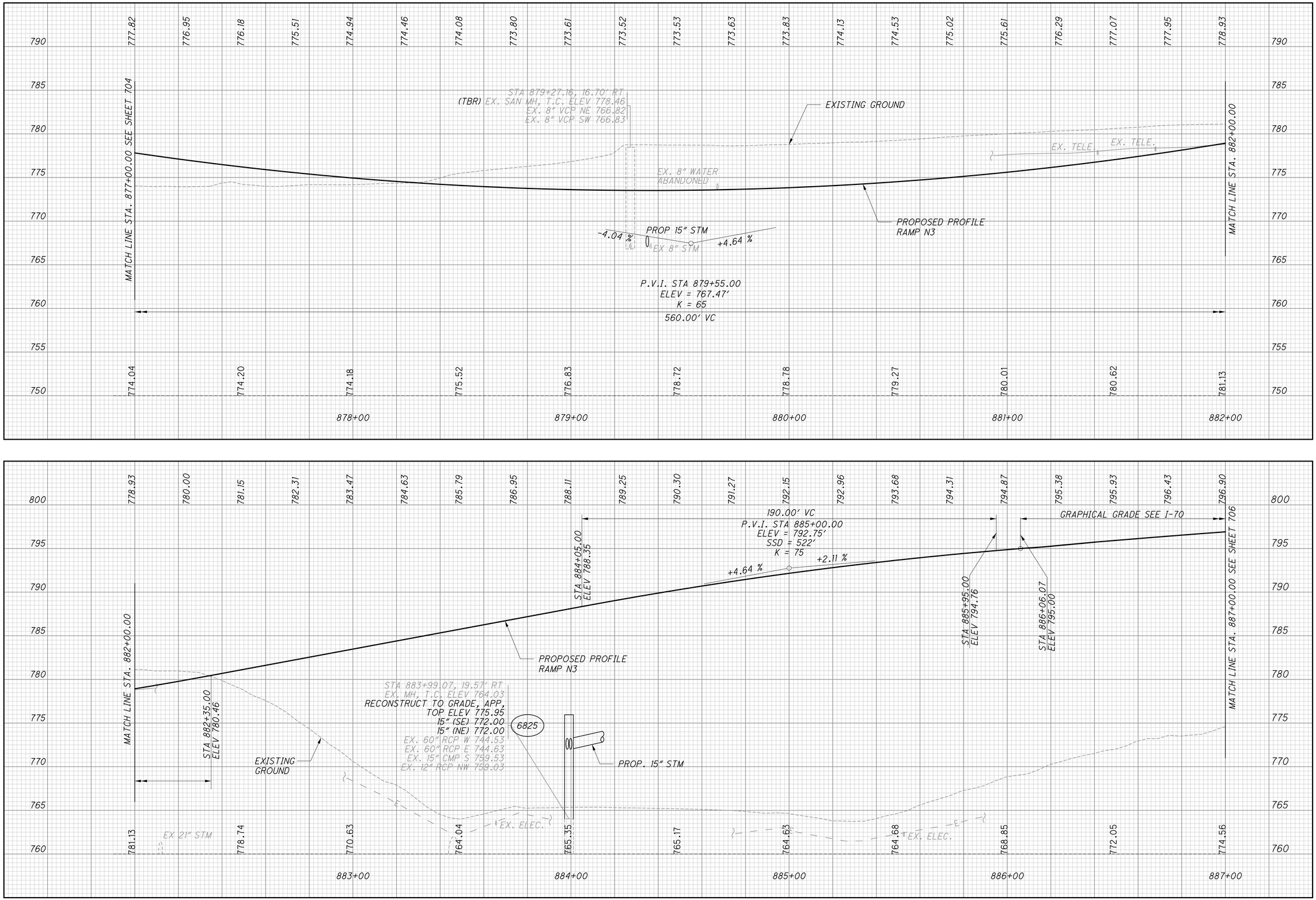

PROFILE - RAMP N3
STA. 877+00 TO STA. 887+00

FRA-70-14.54

705
2317

CALCULATED
CHECKED

ms consultants, inc.

PLOT.CEL

ms consultants, inc.
msconsultants.com

Ohio DOT Workspace
70\71 East Interchange 2E
www.msconsultants.com

Batchplot Spec: \\msconsultants.com\files\production\03\60\06634_2E\standards\plotdrv\batchplt.spc
Pen Table: N:\03\60\06634_2E\standards\tables\V8i_ms_std_06634_2D_Plan View.tbl
Plot Driver: \\msconsultants.com\files\Standards\ustn\ohdot\v8i\ms\plotting\PDF.pltcfg

34" x 22"

Model: Sheet
Printed: 6/19/2018 @ 8:49:24 AM
File: N:\03\60\06634_2E\roadway\sheets\105322GF046.dgn
View: FENCE_VIEW1
By: jdouglas

ms consultants, inc.

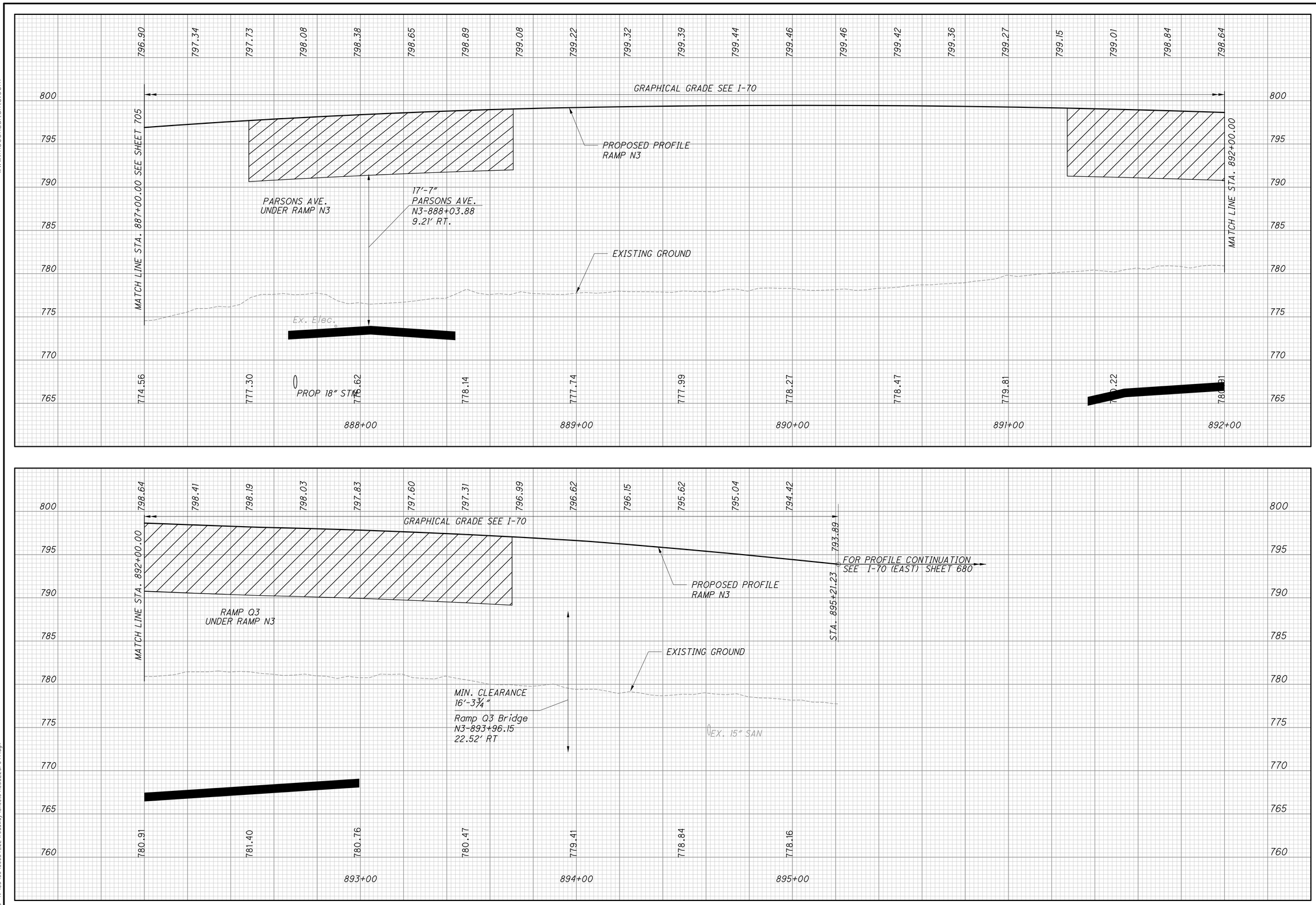

PLOT.CEL

ms consultants, inc.
msconsultants.com

Ohio DOT Workspace
70\71 East Interchange 2E
www.msconsultants.com

Batchplot Spec: \\msconsultants.com\files\production\03\60\06634_2E\standards\plotdrv\batchplt.spc
Pen Table: N:\03\60\06634_2E\standards\tables\V8i_ms_std_06634_2D_Plan View.tbl
Plot Driver: \\msconsultants.com\files\Standards\ustn\ohdot\v8i\ms\plotting\PDF.pltcfg

34" x 22"

Model: Sheet
Printed: 6/19/2018 @ 8:49:26 AM
File: N:\03\60\06634_2E\roadway\sheets\105322GF047.dgn
View: FENCE_VIEW1
By: jdouglas

CALCULATED
CHECKED

PROFILE - RAMP N3
STA. 887+00.00 TO STA. 895+00.00

FRA-70-14.54

706
2317

ms consultants, inc.

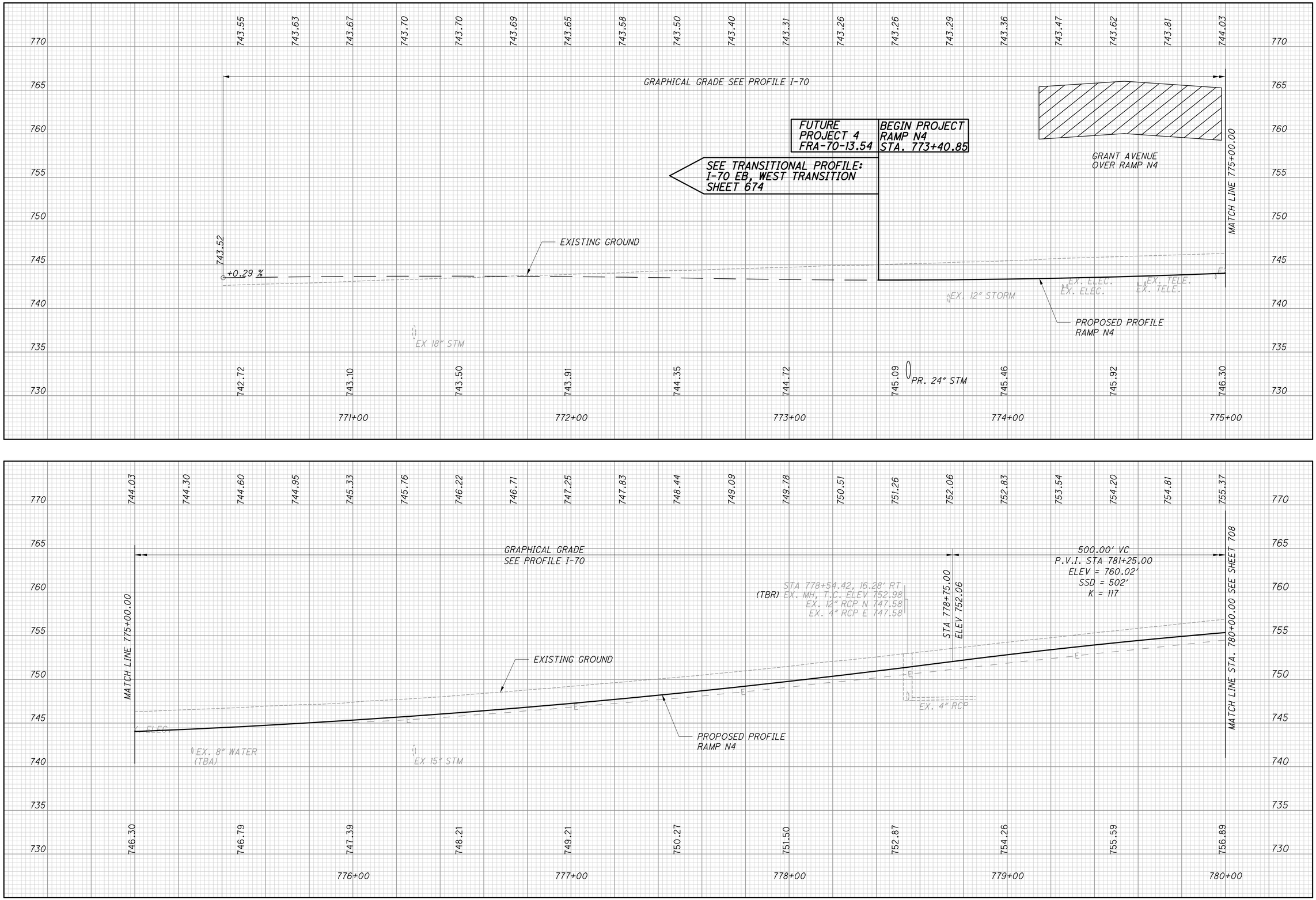

PROFILE - RAMP N4
STA. 773+40.85 TO STA. 780+00.00

FRA-70-14.54

CALCULATED
CHECKED

707
2317

PLOT.CEL
ms consultants, inc.
msconsultants.com
Ohio DOT Workspace
70\71 East Interchange 2E
www.msconsultants.com
Batchplot Spec: \\msconsultants.com\files\production\03\60\06634_2E\standards\plotdrv\batchplt.spc
Pen Table: N:\03\60\06634_2E\standards\tables\V8i_ms_std_06634_2D_Plan View.tbl
Plot Driver: \\msconsultants.com\files\Standards\ustn\ohdot\v8i\ms\plotting\PDF.pltcfg
34" x 22"
View: FENCE_VIEW1
By: jdouglas
Model: Sheet
Printed: 6/19/2018 @ 8:49:30 AM
File: N:\03\60\06634_2E\roadway\sheets\105322GF024.dgn
ms consultants, inc.

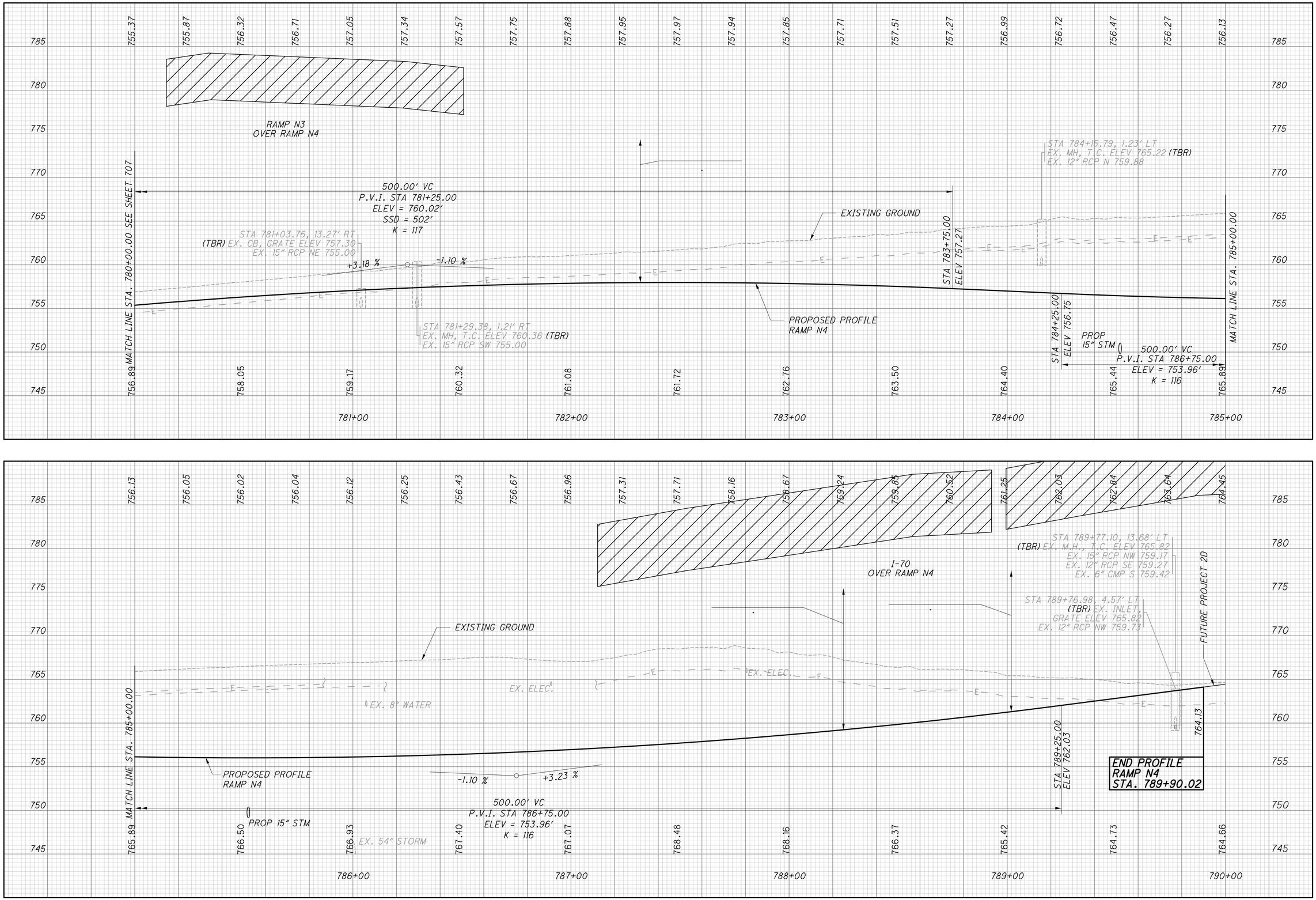

PROFILE - RAMP N4
STA. 780+00.00 TO STA. 790+00.00

CALCULATED

CHECKED

FRA-70-14.54

708
2317

ms consultants, inc.

PLOT.CEL

ms consultants, inc.
msconsultants.com

Ohio DOT Workspace
70\71 East Interchange 2E
www.msconsultants.com

Batchplot Spec: \\msconsultants.com\files\production\03\60\06634_2E\standards\plotdrv\batchplt.spc
Pen Table: N:\03\60\06634_2E\standards\tables\V8i_ms_std_06634_2D_Plan View.tbl
Plot Driver: \\msconsultants.com\files\Standards\ustn\ohdot\v8i\ms\plotting\PDF.pltcfg

34" x 22"

Model: Sheet
Printed: 6/19/2018 @ 8:49:32 AM
File: N:\03\60\06634_2E\roadway\sheets\105322GF025.dgn
View: FENCE_VIEW1
By: jdouglas

ms consultants, inc.

PLOT.CEL

ms consultants, inc.
msconsultants.com

www.msconsultants.com

Ohio DOT Workspace
70\71 East Interchange 2E

PCF: 60-06634_2E_Columbus
DGN: ohdot\V8i

Batchplot Spec: \\msconsultants.com\files\production\03\60\06634_2E\standards\plotdrv\batchplt.spc
Pen Table: N:\03\60\06634_2E\standards\tables\V8i_ms_std_06634_2D_Plan View.tbl
Plot Driver: \\msconsultants.com\files\Standards\usetn\ohdot\v8i\ms\plotting\PDF.pltcfg

Model: 105322GF075
Printed: 6/19/2018 @ 8:49:33 AM
File: N:\03\60\06634_2E\roadway\sheets\105322GF075.dgn
View: FENCE_VIEW1
By: jdoughas

34" x 22"

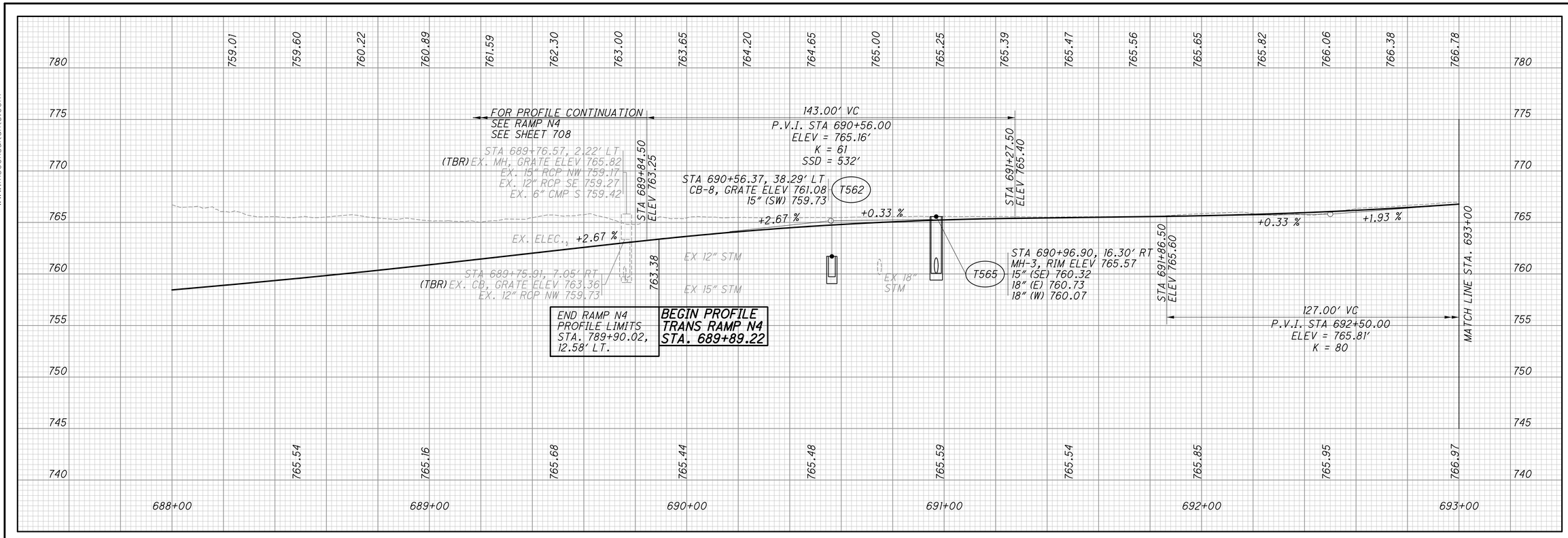

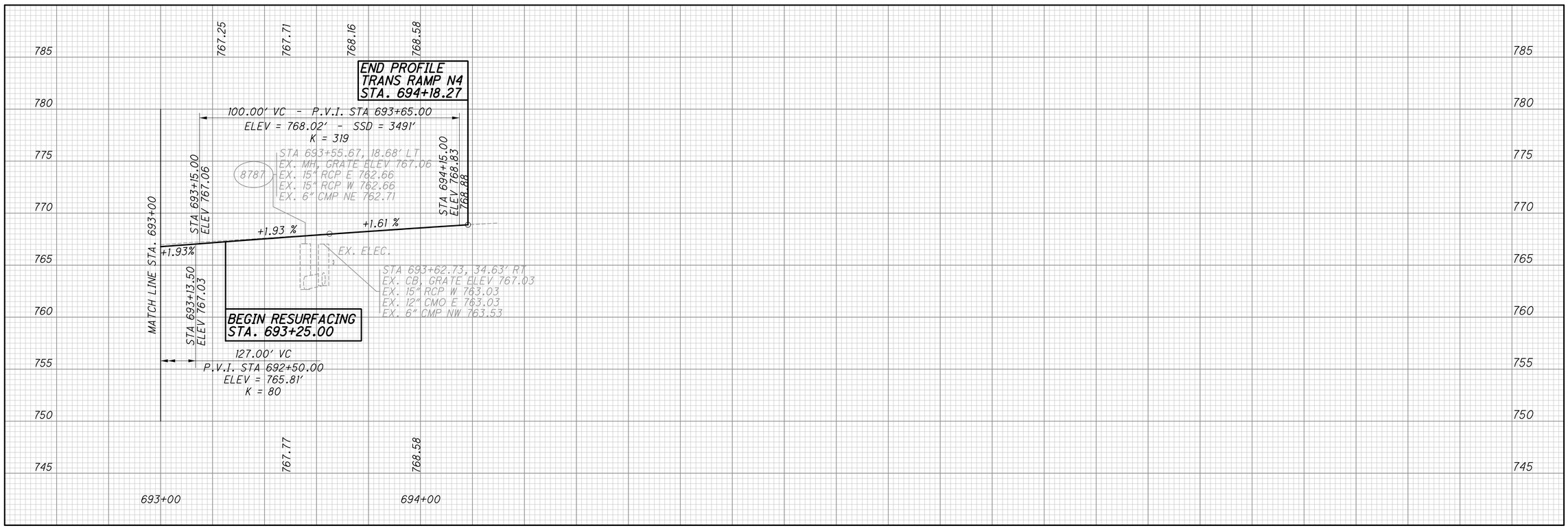

CALCULATED

CHECKED

PROFILE - TRANS. RAMP N4
STA. 688+00.00 TO 694+18.27

FRA-70-14.54

709
2317

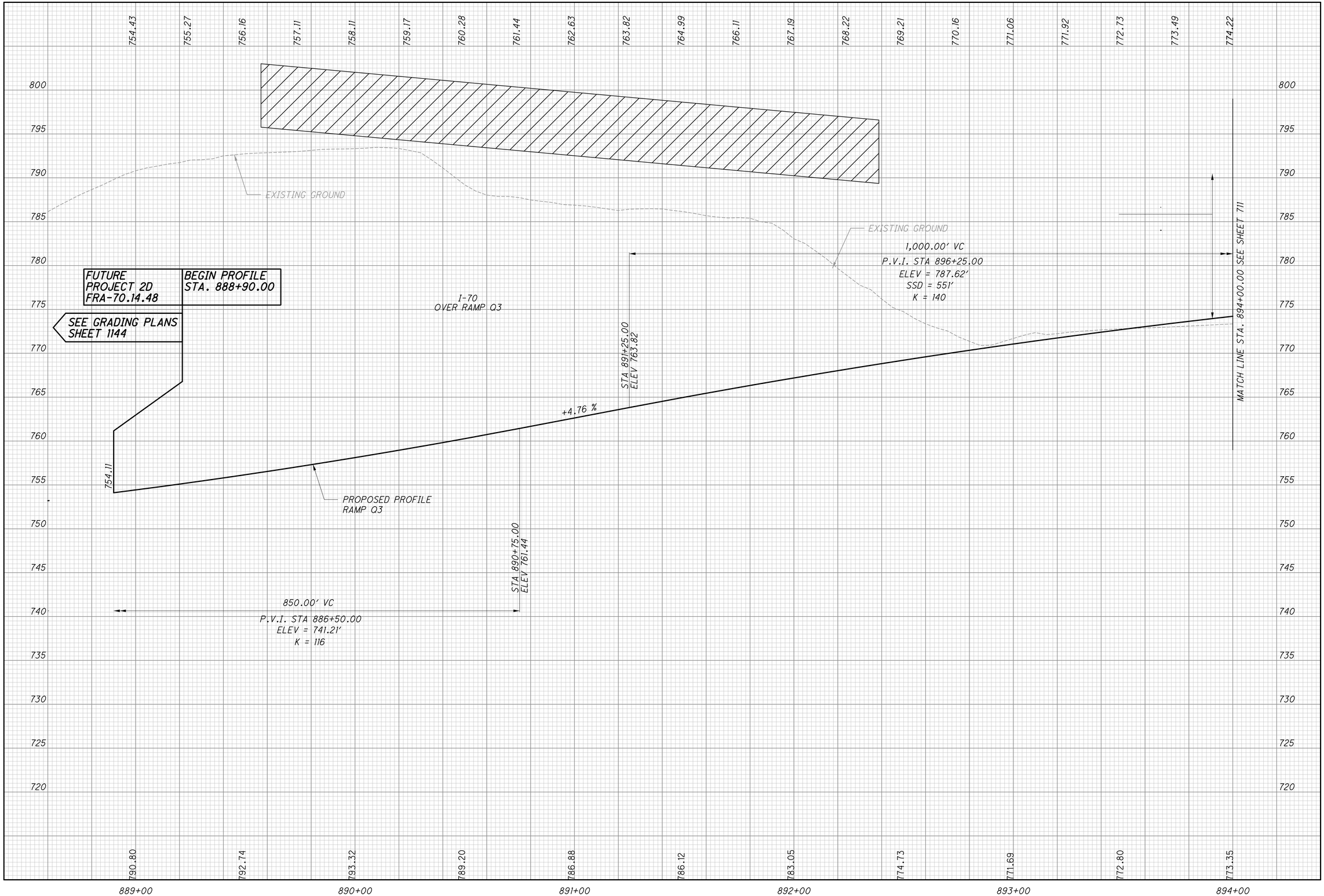

PLOT.CEL

ms consultants, inc.
msconsultants.com

Ohio DOT Workspace
70\71 East Interchange 2E
www.msconsultants.com

Batchplot Spec: \\msconsultants.com\files\production\03\60\06634_2E\standards\plotdrv\batchplt.spc
Pen Table: N:\03\60\06634_2E\standards\tables\V8i_ms_std_06634_2D_Plan View.tbl
Plot Driver: \\msconsultants.com\files\Standards\ustn\ohdot\v8i\ms\plotting\PDF.pltcfg

34" x 22"

Model: Sheet
Printed: 6/19/2018 @ 8:49:35 AM
File: N:\03\60\06634_2E\roadway\sheets\105322GF021.dgn
View: FENCE_VIEW1
By: jdouglas

CALCULATED
CHECKED

PROFILE - RAMP Q3
STA. 888+90.00 TO STA. 894+00.00

FRA-70-14.54

ms consultants, inc.

34" x 22"
Model: Sheet View: FENCE_VIEW1
Printed: 6/19/2018 @ 8:49:38 AM By: jdouglas
File: N:\03\60\06634_2E\roadway\sheets\105322GF022.dgn
Batchplot Spec: \\msconsultants.com\files\production\03\60\06634_2E\standards\plotdrv\batchplt.spc
Pen Table: N:\03\60\06634_2E\standards\tables\V8i_ms_std_06634_2D_Plan View.tbl
Plot Driver: \\msconsultants.com\files\Standards\ustn\ohdot\v8i\ms\plotting\PDF.pltcfg
DGF: ohdotV8i
PCF: 60-06634_2E_Columbus
Ohio DOT Workspace
70\71 East Interchange 2E
ms consultants, inc.
msconsultants.com
PLOT.CEL
www.msconsultants.com

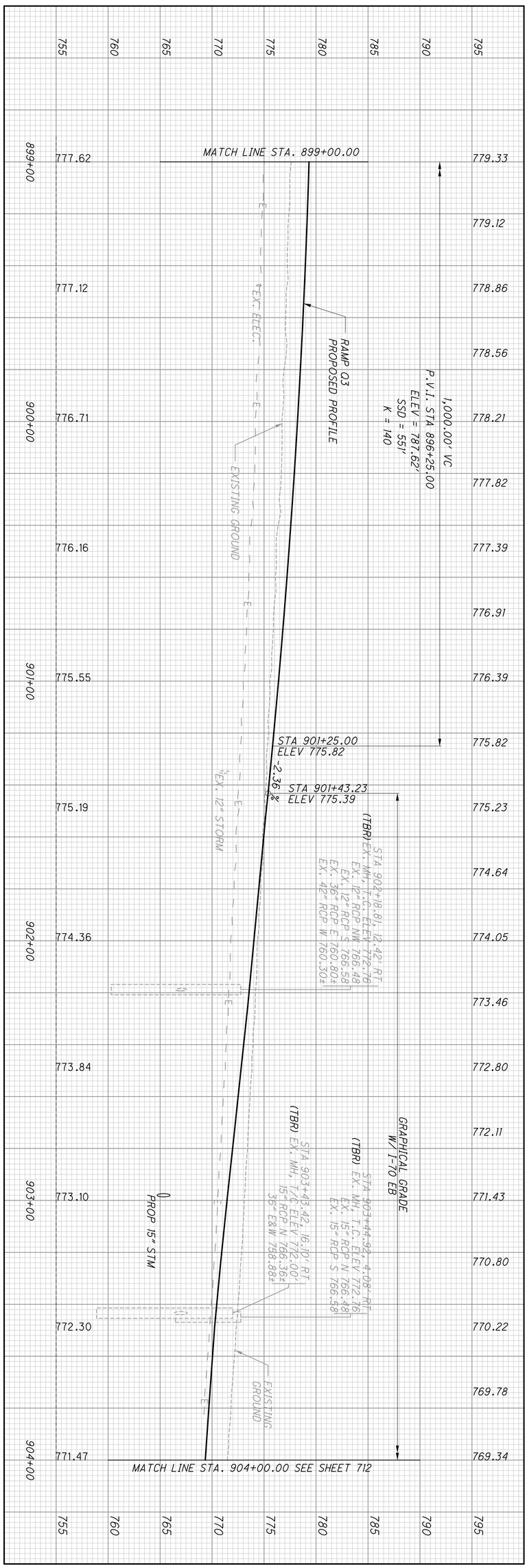

711 / 2317	**FRA-70-14.54**	**PROFILE - RAMP Q3** **STA. 894+00.00 TO STA. 904+00.00**
		CALCULATED CHECKED

ms consultants, inc.

PLOT.CEL

ms consultants, inc.
msconsultants.com

www.msconsultants.com
Ohio DOT Workspace
70\71 East Interchange 2E

1" 0.5" 0

DGN: ohdot\V8i
PCF: 60-06634_2E_Columbus

Batchplot Spec= \\msconsultants.com\files\production\03\60\06634_2E\standards\plotdr\batchplt.spc
Pen Table= N:\03\60\06634_2E\standards\tables\V8i_ms_std_06634_2D_Plan View.tbl
Plot Driver= \\msconsultants.com\files\Standards\ustn\ohdot\v8i\ms\plotting\PDF.pltcfg

Model: Sheet View: FENCE_VIEW1
Printed: 6/19/2018 @ 8:49:40 AM By: jdouglas
File: N:\03\60\06634_2E\roadway\sheets\005322GF023.dgn

34" x 22"

795 790 785 780 775 770 765 760 755

768.89 768.48 768.11 767.79 767.52 767.29 767.11 766.96 766.87 766.81 766.81 766.84 766.92 767.04 767.21 767.42 767.66 767.89 768.12 768.35 768.58 768.81

904+00 905+00 906+00 907+00 908+00 909+00

770.83 769.96 769.48 768.94 768.63 768.39 768.23 768.26 768.27 768.66 768.84

GRAPHICAL GRADE
W/ I-70 EB

END WORK
RAMP Q3
STA. 907+33.94

FUTURE
PROJECT 5
FRA-70-15.29

SEE TRANSITIONAL PROFILE:
I 70 EB, EAST TRANSITION
SHEET 682

RAMP 18TH
OVER RAMP Q3

MATCH LINE STA. 904+00.00 SEE SHEET 711

STA 906+45.30, 4.97' RT
(TBR) EX. MH, T.C. ELEV 769.19
EX. 36" RCP SW 760.19
EX. 36" RCP N 760.19
EX. 18" RCP S 764.24
EX. 15" RCP NE 763.89
EX. 15" CPP E 763.21

STA 907+20.74, 3.45' RT
(TBR) EX. MH, T.C. ELEV 768.72
EX. 15" CPP E 763.69
EX. 15" CPP W 763.64

STA 907+69.82, 1.09' RT
EX. CB, GRATE ELEV 768.10 (TBR)
EX. 15" CPP W 763.86
EX. 12" CPP E 764.10

STA 908+19.69, 3.62' RT
EX. MH, T.C. ELEV 768.74 (TBR)
EX. 12" CPP W 764.21

EXISTING GROUND

766.96

768.85

EX. ELEC.

EX. ELEC.

EX. 8" WATER
ABANDONED AS
PART OF PHASE 2C

EX. 12" STORM

PROPOSED PROFILE
RAMP Q3

EX. 15" CPP

EX. 15" CPP

EX. 12" CPP

EX. 36" RCP

PROP 36" STM

CALCULATED

CHECKED

PROFILE - RAMP Q3
STA. 904+00.00 TO STA. 909+54.86

FRA-70-14.54

712
2317

ms consultants, inc.

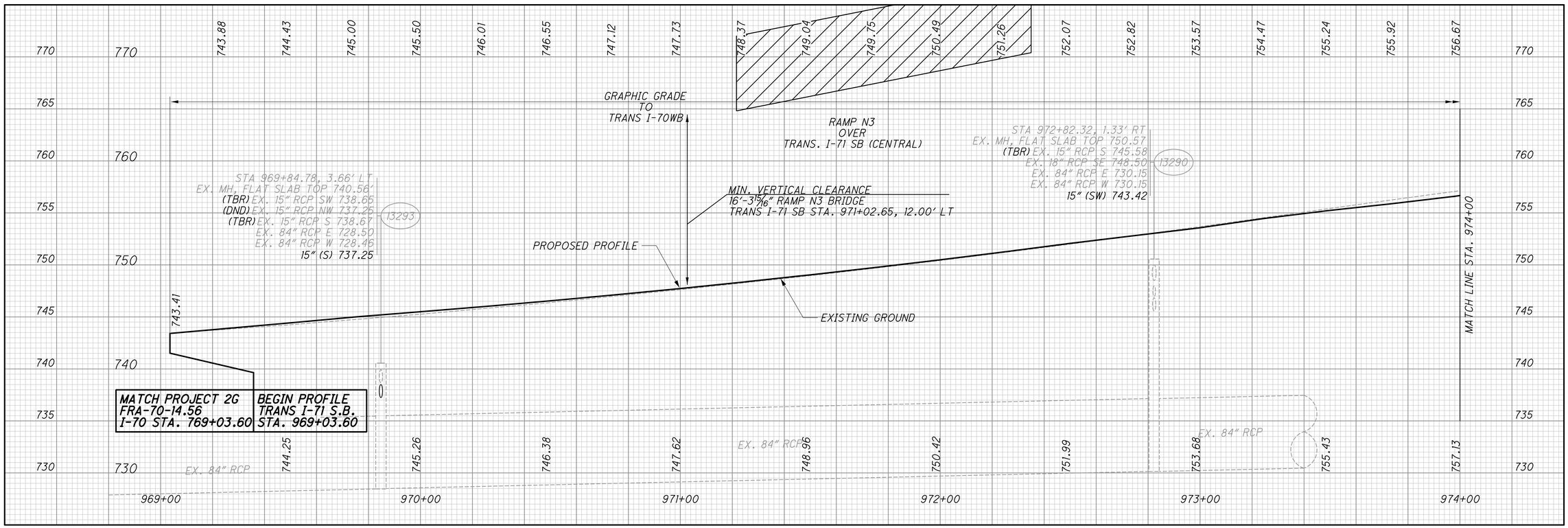

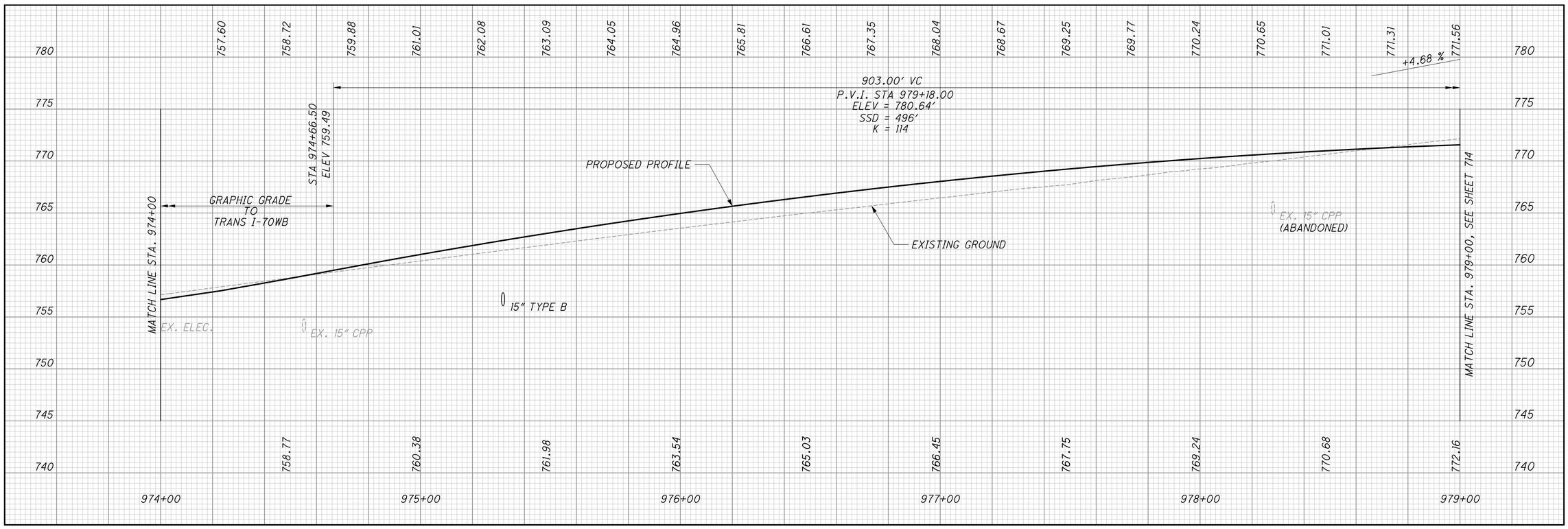

PROFILE - TRANS. I-71 SB (CENTRAL)
STA. 969+03.60 TO 979+00.00

FRA-70-14.54

CALCULATED
CHECKED

ms consultants, inc.

34" x 22"
Model: 105322GF080 View: FENCE_VIEW1
Printed: 6/19/2018 @ 8:49:43 AM By: jdouglas
File: N:\03\60\06634_2E\roadway\sheets\105322GF080.dgn
Batchplot Spec: \\msconsultants.com\files\production\03\60\06634_2E\standards\plotdrv\batchplt.spc
Pen Table: N:\03\60\06634_2E\standards\tables\V8i_ms_std_06634_2D_Plan View.tbl
Plot Driver: \\msconsultants.com\files\Standards\ustn\ohdot\v8i\ms\plotting\PDF.pltcfg
DGF: ohdotV8i
PCF: 60-06634_2E_Columbus
Ohio DOT Workspace
70\71 East Interchange 2E
ms consultants, inc.
msconsultants.com
PLOT.CEL
www.msconsultants.com

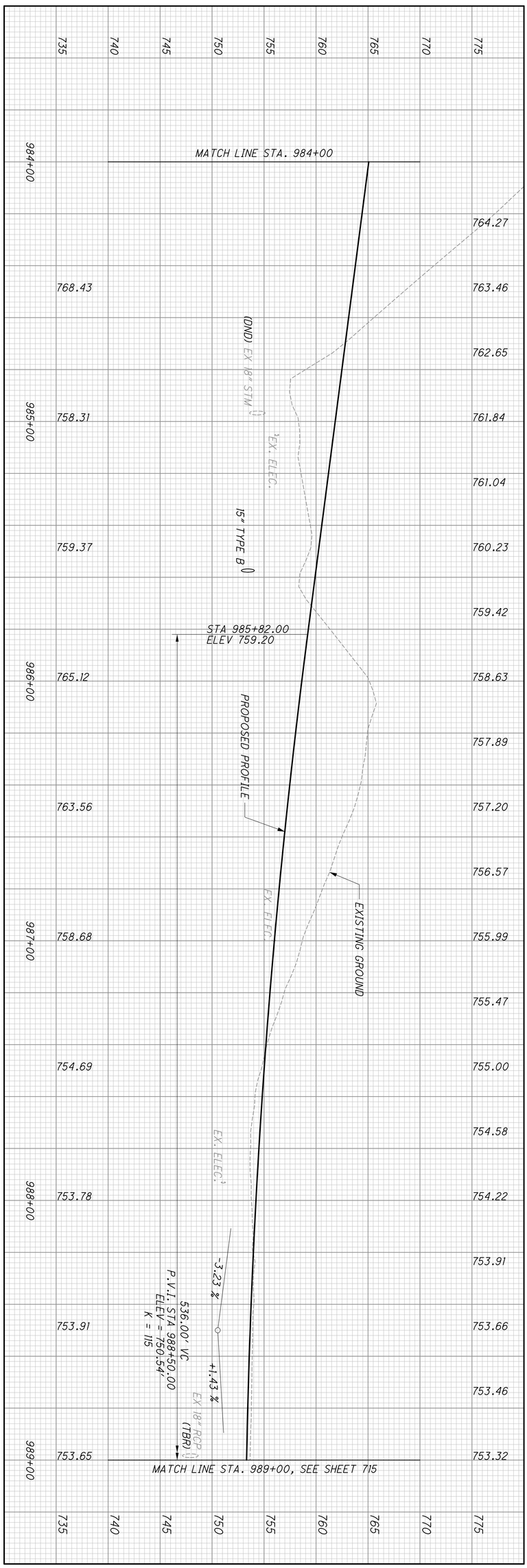

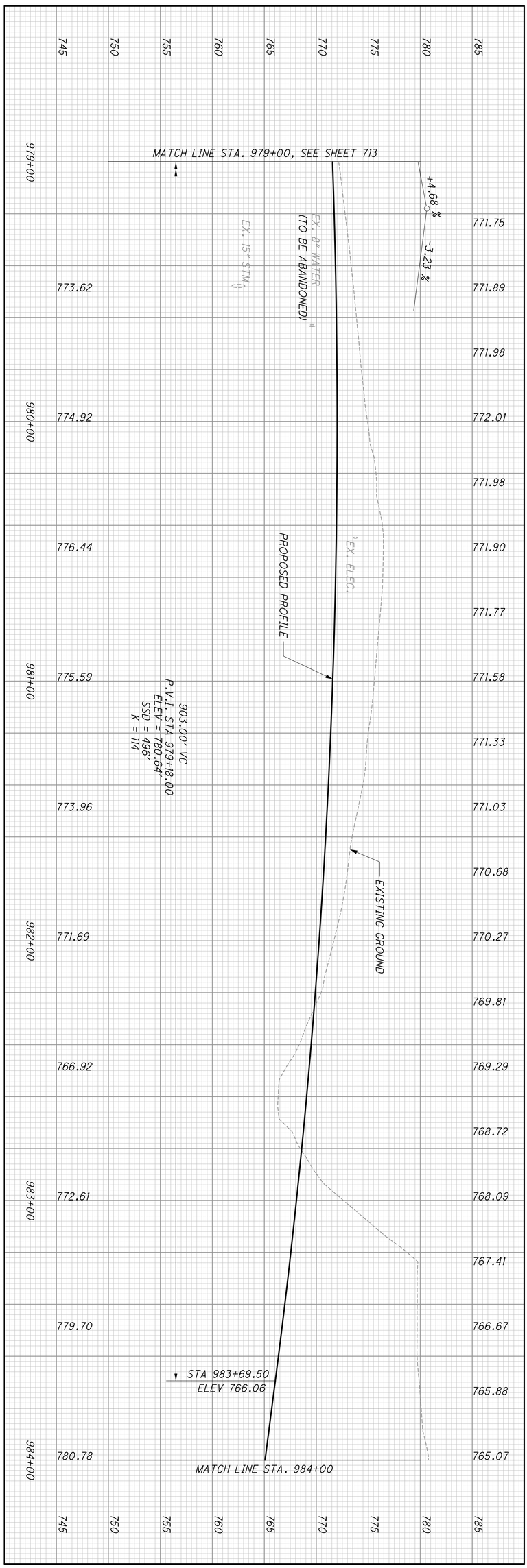

714
2317

FRA-70-14.54

PROFILE - TRANS. I-71 SB (CENTRAL)
STA. 979+00.00 TO 989+00.00

CALCULATED
CHECKED

ms consultants, inc.

34" x 22"

Model: 105322GF081 View: FENCE_VIEW1
Printed: 6/19/2018 @ 8:49:44 AM By: jdouglas
File: N:\03\60\06634_2E\roadway\sheets\105322GF081.dgn

Batchplot Spec: \\msconsultants.com\files\production\03\60\06634_2E\standards\plotdrv\batchplt.spc
Pen Table: N:\03\60\06634_2E\standards\tables\V8i_ms_std_06634_2D_Plan View.tbl
Plot Driver: \\msconsultants.com\files\Standards\ustn\ohdot\v8i\ms\plotting\PDF.pltcfg

0 1"
0.5"

DGF: ohdotV8i
PCF: 60-06634_2E_Columbus

Ohio DOT Workspace
70\71 East Interchange 2E

ms consultants, inc.
msconsultants.com

PLOT.CEL

www.msconsultants.com

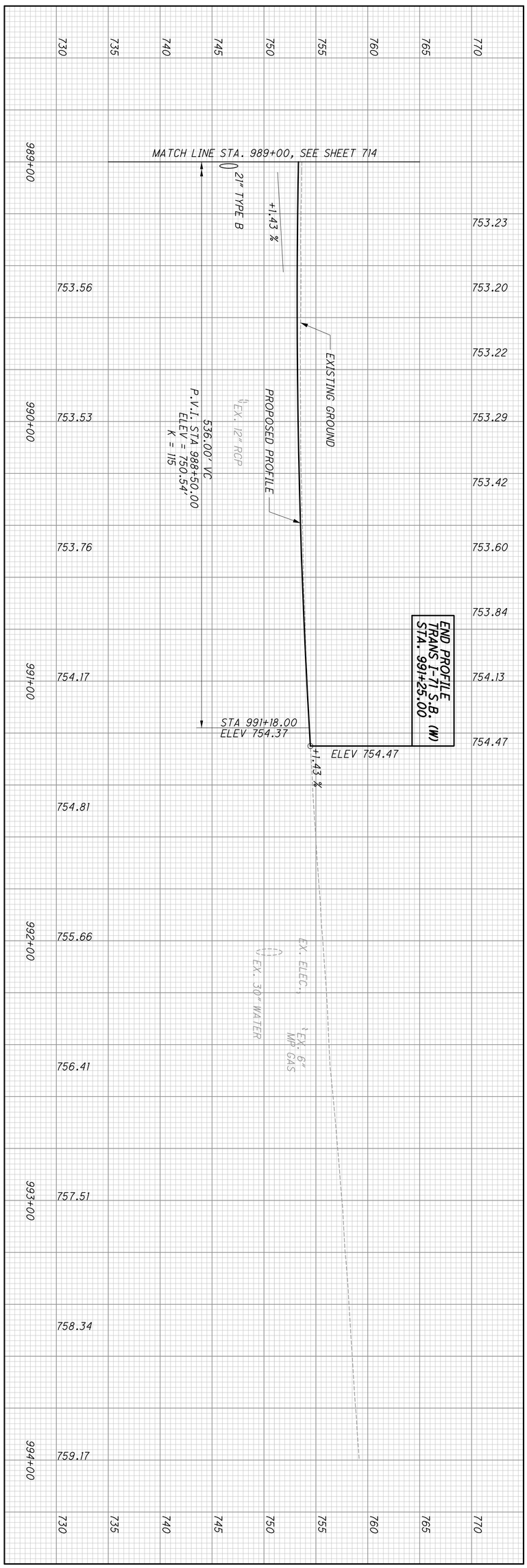

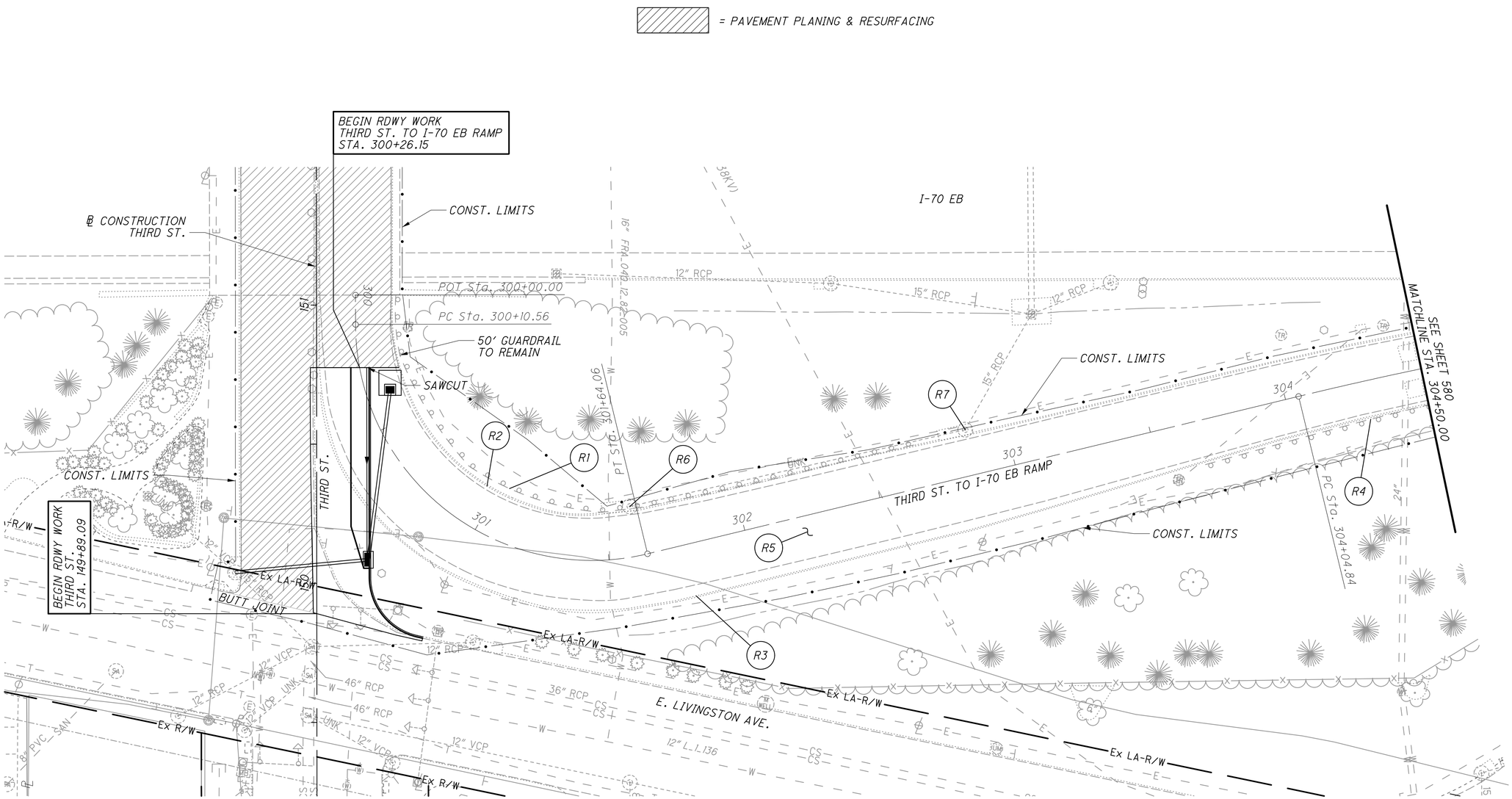

FOR THIRD STREET QUANTITIES SEE SHEET 731

FOR FOR PAVEMENT MARKINGS SEE SHEET 1342A

HORIZONTAL SCALE IN FEET 0 10 20 40

CALCULATED

CHECKED

PLAN SHEET - THIRD ST. TO I-70 EB RAMP
STA. 300+00.00 TO STA. 304+50.00

FRA-70-14.54

715A
2317

PLOT.CEL
ms consultants, inc.
msconsultants.com
Ohio DOT Workspace
70\71 East Interchange 2E
www.msconsultants.com
Batchplot Spec: \\msconsultants.com\files\production\03\60\06634_2E\standards\plotdrv\batchplt.spc
Pen Table: N:\03\60\06634_2E\standards\tables\V8i_ms_std_06634_2D_Plan View.tbl
Plot Driver: \\msconsultants.com\files\Standards\ustn\ohdot\v8i\ms\plotting\PDF.pltcfg
34" x 22"
Model: Sheet
View: SHEET
Printed: 6/19/2018 @ 8:50:26 AM
By: jdouglas
File: \\msconsultants.com\files\Production\03\60\06634_2E\roadway\sheets\105322GP046.dgn
ms consultants, inc.

PLOT.CEL

ms consultants, inc.
msconsultants.com

www.msconsultants.com

Ohio DOT Workspace
70\71 East Interchange 2E

1" 0.5" 0

PDF: ohdot\V8i
PDF: 60-06634_2E_Columbus

Batchplot Spec: \\msconsultants.com\files\production\03\60\06634_2E\standards\plotdr\batchplt.spc
Pen Table: \\msconsultants.com\files\Standards\astm\ohdot\V8\ms\plotting\pen\V8i_ms_std.tbl
Plot Driver: \\msconsultants.com\files\Standards\astm\ohdot\v8i\ms\plotting\PDF.pltcfg

Model: Sheet
Printed: 6/19/2018 @ 8:50:28 AM
File: \\msconsultants.com\files\Production\03\60\06634_2E\roadway\sheets\0532200046.dgn

View: FENCE_VIEW1
By: jdougias

34" x 22"

CALCULATED JDD
CHECKED HRB

ESTIMATED QUANTITIES

REF. NO.	SHEET NO.	STATION		SIDE		202 GUARDRAIL REMOVED	202 CURB REMOVED	202 PAVEMENT REMOVED	202 CONCRETE BARRIER REMOVED	202 PIPE REMOVED, 24" AND UNDER	202 INLET REMOVED	202 CATCH BASIN REMOVED
		THIRD ST. RAMP - (THRD_RP)										
		FROM	TO			FT	FT	SQ YD	FT	FT	EACH	EACH
R1	715A	300+59.57	304+50.00	LT		185						
R2	715A	300+29.23	304+50.00	LT			396					
R3	715A	300+73.21	304+50.00	RT			396					
R4	715A	303+66.51	304+50.00	RT		83						
R5	715A	300+56.66	304+50.00	RT\LT				1216				
R6	715A	301+61.29	304+50.00	LT						124		1
R7	715A	302+85.54	303+18.45	LT						48		1
TOTALS CARRIED TO SUB-SUMMARY						268	792	1216		172		2

FRA-70-14.54

715B
2317

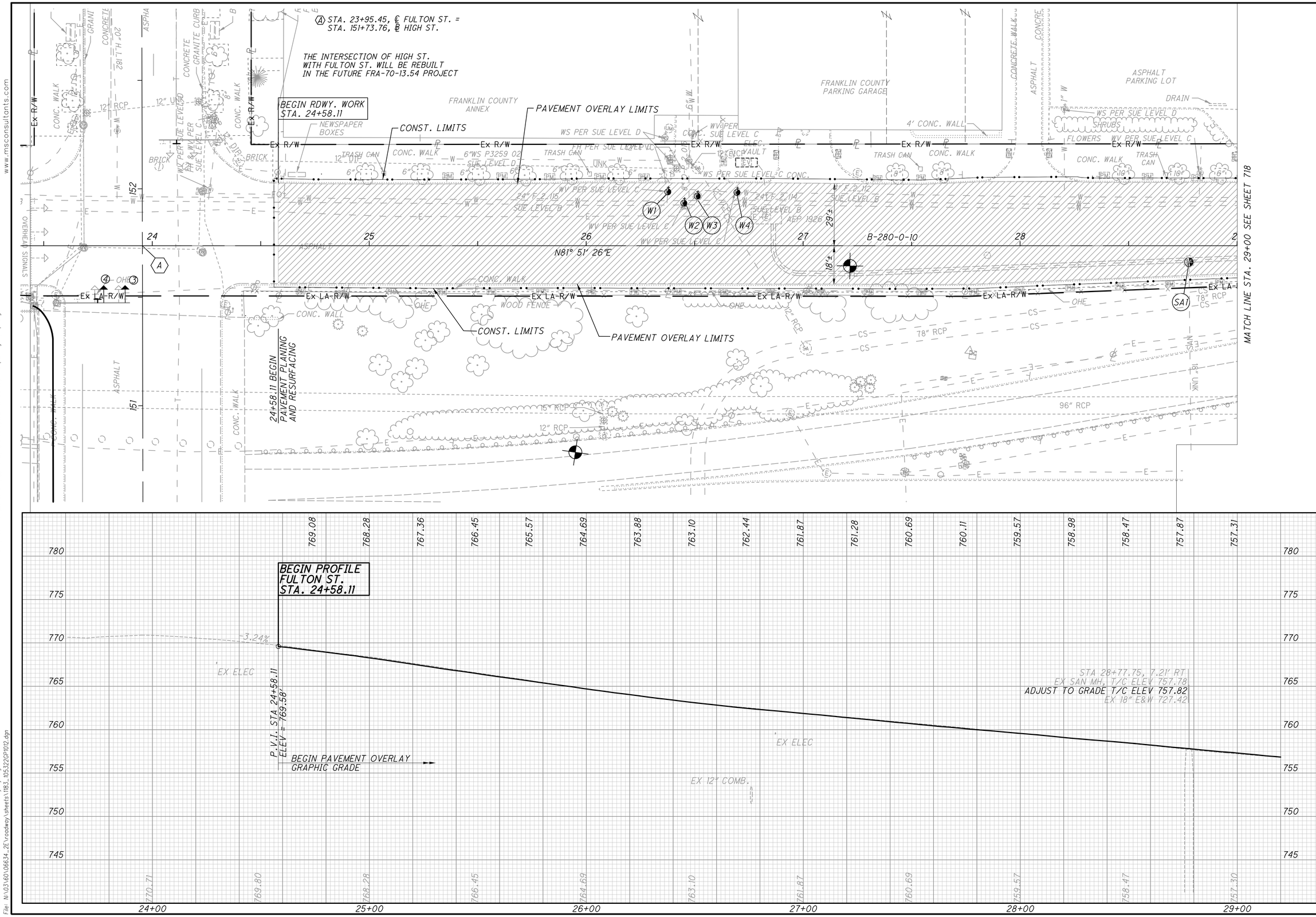

PLOT.CEL

ms consultants, inc.
msconsultants.com

Ohio DOT Workspace
70\71 East Interchange 2E
www.msconsultants.com

Batchplot Spec: \\msconsultants.com\files\production\03\60\06634_2E\standards\plotdrv\batchplt.spec
Pen Table: N:\03\60\06634_2E\standards\tables\V8i_ms_std_06634_2D_Plan View.tbl
Plot Driver: \\msconsultants.com\files\Standards\ustn\ohdot\v8i\ms\plotting\PDF.pltcfg

34" x 22"

Model: Sheet
Printed: 6/19/2018 @ 8:50:51 AM
File: N:\03\60\06634_2E\roadway\sheets\1183_105322GP1012.dgn
View: FENCE_VIEW1
By: jdouglas

HORIZONTAL SCALE IN FEET
0 20 40

CALCULATED
CHECKED

PLAN AND PROFILE - FULTON ST.
STA.24+00.00 TO STA. 29+00.00

FRA-70-14.54

716
2317

ms consultants, inc.

PLOT.CEL

ms consultants, inc.
msconsultants.com

www.msconsultants.com
Ohio DOT Workspace
70\71 East Interchange 2E

1" 0.5" 0

DGN: ohdot\V8i
PCF: 60-06634_2E_Columbus

34" x 22"

View: FENCE_VIEW1
By: jbougas

Model: Sheet
Printed: 6/19/2018 @ 8:50:54 AM
File: N:\03\60\06634_2E\roadway\sheets\1184_105320G0120.dgn

Batchplot Spec: \\msconsultants.com\files\production\03\60\06634_2E\standards\plotdrv\batchplt.spc
Pen Table: N:\03\60\06634_2E\standards\tables\V8i_ms_std_06634_2D_Plan View.tbl
Plot Driver: \\msconsultants.com\files\Standards\ustn\ohdot\v8i\ms\plotting\PDF.pltcfg

REF. NO.	SHEET NO.	STATION FROM	STATION TO	SIDE	611 MANHOLE ADJUSTED TO GRADE EACH	SPECIAL HEAVY DUTY VALVE BOX ADJUSTED TO GRADE (COL. 807) EACH
W-1	716	26+37.58	26+37.58	LT		1
W-2	716	26+44.97	26+44.97	LT		1
W-3	716	26+51.14	26+51.14	LT		1
W-4	716	26+69.44	26+69.44	LT		1
SA-1	716	28+77.73	28+77.73	RT	1	
TOTALS CARRIED TO SUB-SUMMARY					1	4

CALCULATED AMF
CHECKED CSR

ESTIMATED QUANTITIES

FRA-70-14.54

717
2317

PLOT.CEL

ms consultants, inc.
msconsultants.com

CROSS REFERENCES	
SHEET NO	DESCRIPTION
1085-1086	INTERSECTION DETAIL
1122	PAVEMENT JOINT DETAIL
1257G, 1260	STORM SEWER PROFILES

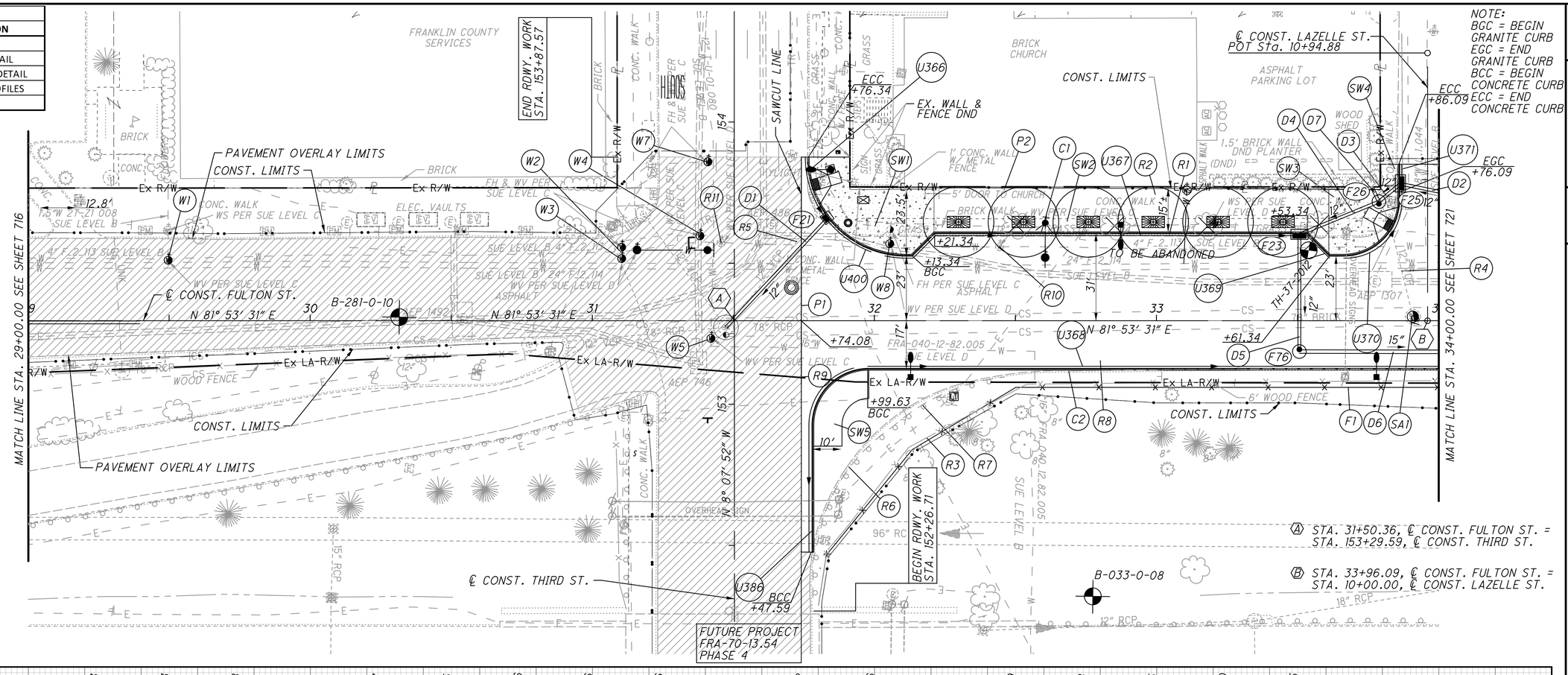

NOTE:
BGC = BEGIN GRANITE CURB
EGC = END GRANITE CURB
BCC = BEGIN CONCRETE CURB
ECC = END CONCRETE CURB

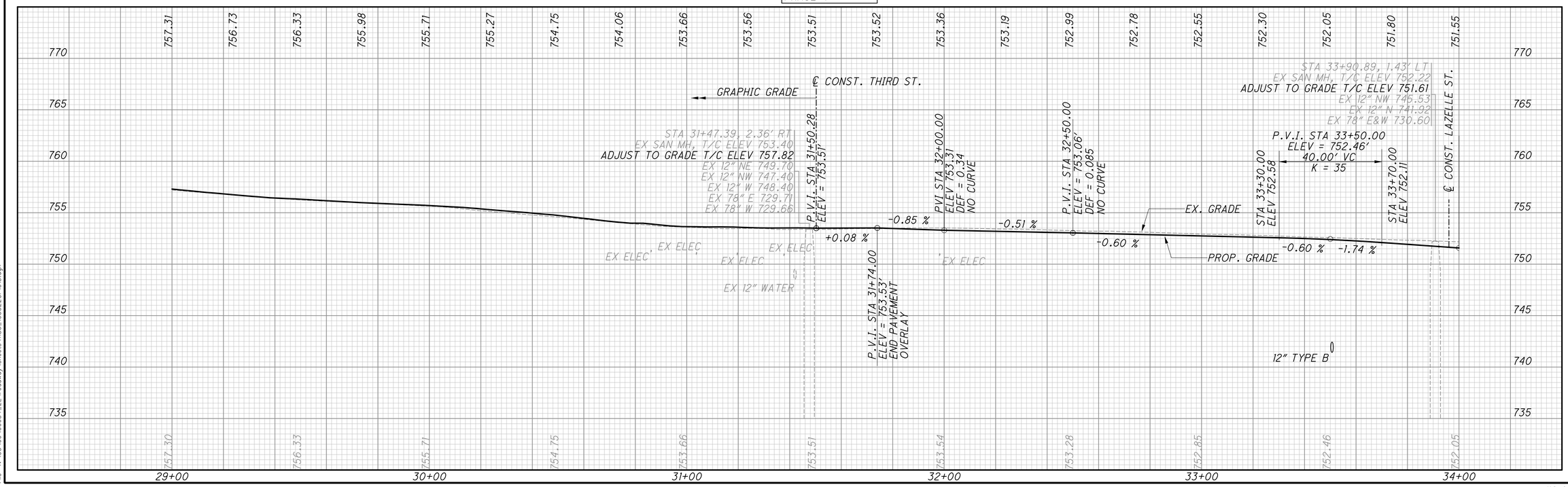

HORIZONTAL SCALE IN FEET
0 10 20 40

CALCULATED | CHECKED

PLAN AND PROFILE - FULTON ST.
STA. 29+00.00 TO STA. 34+00.00

FRA-70-14.54

718
2317

ms consultants, inc.

Batchplot Spec: \\msconsultants.com\files\production\03\60\06634.2E\standards\plotdrv\batchplt.spc
Pen Table: N:\03\60\06634.2E\standards\tables\V8i_ms_std_06634_2D_Plan View.tbl
Plot Driver: \\msconsultants.com\files\Standards\usetn\ohdot\v8i\ms\plotting\PDF.pltcfg

Model: Sheet @ 8:51:03 AM View: FENCE_VIEW1
Printed: 6/19/2018 By: jdouglas
File: N:\03\60\06634.2E\roadway\sheets\1185_105222CP1013.dgn

34" x 22"

Ohio DOT Workspace
70\71 East Interchange 2E
www.msconsultants.com

DGN: ohdot\v8i
PCF: 60-06634_2E_Columbus

PLOT.CEL

ms consultants, inc.
msconsultants.com

Ohio DOT Workspace
70\71 East Interchange 2E
www.msconsultants.com

Batchplot Spec: \\msconsultants.com\files\production\03\60\06634_2E\standards\plotdrv\batchplt.spc
Pen Table: N:\03\60\06634_2E\standards\tables\V8i_ms_std_06634_2D_Plan View.tbl
Plot Driver: \\msconsultants.com\files\Standards\ustn\ohdot\v8i\ms\plotting\PDF.pltcfg
UCF: ohdotV8i
PCF: 60-06634_2E_Columbus

34" x 22"

View: FENCE_VIEW1
By: jdouglas
Model: Sheet
Printed: 6/19/2018 @ 8:51:05 AM
File: N:\03\60\06634_2E\roadway\sheets\1186_105322GQ130.dgn

REF. NO.	SHEET NO.	STATION FROM	STATION TO	SIDE	202 WALK REMOVED SQ FT	202 PAVEMENT REMOVED SQ YD	202 CURB REMOVED FT	202 PIPE REMOVED, 24" AND UNDER FT	202 GUARDRAIL REMOVED FT	202 INLET REMOVED EACH	202 FENCE REMOVED FT	608 4" CONCRETE WALK SQ FT	608 8" CONCRETE WALK SQ FT	608 WALKWAY MISC.: COLS. CURB RAMP TYPE A, AS PER PLAN EACH	608 DETECTABLE WARNING, AS PER PLAN SQ FT	SPECIAL HEAVY DUTY VALVE BOX ADJUSTED TO GRADE (COL. 807) EACH	252 FULL DEPTH PAVEMENT SAWING FT	638 FIRE HYDRANT ADJUSTED TO GRADE EACH	202 VALVE BOX REMOVED EACH
R-1	718	31+76.98	33+84.88	LT			247												
R-2	718	31+77.55	33+85.38	LT	2428														
R-3	718	31+80.09	34+00.00	RT							260								
R-4	718	33+82.45	33+89.21	LT				35		1									
R-5	718	31+47.30	31+81.38	LT				54		1									
R-6	718	31+79.54	34+00.00	RT			259												
R-7	718	31+78.18	32+46.00	RT					114										
R-8	718	31+74.19	34+00.00	LT&RT		1252													
R-9	718	31+74.00		LT&RT													147		
SW-1	718	31+76.84	32+21.13	LT									898	1	8				
SW-2	718	32+21.13	33+61.09	LT								2186							
SW-3	718	33+61.09	33+85.59	LT									420	1	8				
SW-4	718	33+79.55	33+85.59	LT								45							
SW-5	718	31+78.13	31+97.63	RT									302						
W-1	718	29+49.57	29+49.57	LT												1			
W-2	718	31+10.29	31+10.29	LT												1			
W-3	718	31+10.35	31+10.35	LT												1			
W-4	718	31+38.09	31+38.09	LT												1			
W-5	718	31+42.47	31+42.47	RT												1			
W-7	718	30+40.96	30+40.96	LT												1			
W-8	718	32+05.45	32+05.60	LT												1		1	
R10	718	32+44.37		LT															1
R11	718	31+45.67		LT															1
TOTALS CARRIED TO SUB-SUMMARY					2428	1252	506	89	114	2	260	2231	1620	2	16	7	147	1	2

CALCULATED AMF
CHECKED CSR

ESTIMATED QUANTITIES

FRA-70-14.54

ms consultants, inc.

PLOT.CEL

ms consultants, inc.
msconsultants.com

www.msconsultants.com
Ohio DOT Workspace
70\71 East Interchange 2E

1" 0.5" 0

DGN: ohdot\V8i
PCF: 60-06634_2E_Columbus

34" x 22"

Model: Sheet
Printed: 6/19/2018 @ 8:51:07 AM
File: N:\03\60\06634_2E\roadway\sheets\1187_105322GQ131.dgn
View: FENCE_VIEW1
By: jdougas

Batchplot Spec: \\msconsultants.com\files\production\Q3\60\06634_2E\standards\plotdrv\batchplt.spc
Pen Table: N:\03\60\06634_2E\standards\tables\V8i_ms_std_06634_2D_Plan View.tbl
Plot Driver: \\msconsultants.com\files\Standards\ustn\ohdot\v8i\ms\plotting\PDF.pltcfg

REF. NO.	SHEET NO.	STATION FROM	STATION TO	SIDE	252 FULL DEPTH PAVEMENT SAWING	607 FENCE, TYPE CL	609 CURB, MISC.; STRAIGHT 18" GRANITE CURB, AS PER PLAN "A"	609 CURB, MISC.; COLUMBUS 18" CONCRETE CURB, AS PER PLAN	611 12" CONDUIT, TYPE B, AS PER PLAN	611 12" CONDUIT, TYPE C, AS PER PLAN	611 15" CONDUIT, TYPE B, AS PER PLAN	611 MANHOLE ADJUSTED TO GRADE	611 INLET, MISC.: CITY OF COLUMBUS STANDARD CURB AND GUTTER INLET	611 INLET, MISC.: CITY OF COLUMBUS DOUBLE CURB AND GUTTER INLET	611 INLET, MISC.: CITY OF COLUMBUS DOUBLE CURB AND GUTTER INLET FOR GRANITE CURBING	611 MANHOLE, MISC.: CITY OF COLUMBUS, MANHOLE, TYPE C	611 MANHOLE REHABILITATION, AS PER PLAN	611 CONDUIT, MISC.: 12" CHECK VALVE	253 PAVEMENT REPAIR
					FT	FT	FT	FT	FT	FT	FT	EACH	EACH	EACH	EACH	EACH	EACH	EACH	SQ.YD.
D-1	718	31+47.38	31+83.52	LT					53			1	1				1	1	22
D-2	718/721	33+86.09	34+06.09	LT					20						1				
D-3	718	33+78.84	33+86.09	LT						10				1					
D-4	718	33+50.68	33+78.84	LT						31						1			
D-5	718	33+50.65	33+50.68	LT&RT					42						1				
D-6	718/721	33+89.21	35+05.41	RT							156					1			
D-7	718	33+76.58	33+78.84	LT						6									
SA-1	718	33+90.80	33+90.80	LT								1							
P-1	718	31+74.00	31+74.00	LT&RT	140														
P-2	718	31+91.33	33+18.78	LT	127														
C-1	718	31+76.26	33+86.01	LT			196	67											
C-2	718	31+77.56	34+00.00	RT			202	77											
F-1	718	31+80.09	34+00.00	RT		260													
TOTALS CARRIED TO SUB-SUMMARY					267	260	398	144	115	47	156	2	1	1	2	2	1	1	22

CALCULATED AMF
CHECKED CSR

ESTIMATED QUANTITIES

FRA-70-14.54

720
2317

ms consultants, inc.

PLOT.CEL

ms consultants, inc.
msconsultants.com

Ohio DOT Workspace
70\71 East Interchange 2E
www.msconsultants.com

0 0.5" 1"

Batchplot Spec: \\msconsultants.com\files\production\03\60\06634_2E\standards\plotdrv\batchplt.spc
Pen Table: \\msconsultants.com\files\Production\03\60\06634_2E\standards\tables\V8i_ms_mm.tbl
Plot Driver: \\msconsultants.com\files\Standards\astm\ohdot\v8i\ms\plotting\PDF.pltcfg

Model: Sheet
Printed: 1/17/2019 @ 1:52:13 PM
File: \\msconsultants.com\files\Production\03\60\06634_2E\roadway\sheets\1188_1053220P1014.dgn
View: SHEET
By: dhall

34" x 22"

CROSS REFERENCES	
SHEET NO	DESCRIPTION
1086-1087	INTERSECTION DETAIL
1123-1124	PAVEMENT JOINT DETAIL
1257G, 1260	STORM SEWER PROFILES

BRICK PAVER CROSSWALK LIMITS		
STA.	ALIGNMENT	BEGIN/END
35+90.84	MOUND ST.	BEGIN
36+10.84	MOUND ST.	END
36+76.16	MOUND ST.	BEGIN
36+96.16	MOUND ST.	END
154+53.76	FOURTH ST.	BEGIN
154+73.76	FOURTH ST.	END

MATCH LINE STA. 34+00.00 SEE SHEET 718

FIRE STATION DRIVE
FIRE STATION
FIRE STATION DRIVE
ASPHALT PARKING LOT
GRASS
CONST. LIMITS
℄ CONST. FULTON ST.
℄ CONST. FOURTH ST.
Ex R/W
Ex LA-R/W
TMP
ECC +55.45
BGC +47.44
ECC +93.43
EGC +84.82
ECC +89.92
+89.92
ECC +20.00
BGC +84.82
BGC +00.35
+00.35
+24.91
DND +16.91
END RDWY WORK STA. 155+20.00
END RDWY. WORK STA. 37+50.00
BEGIN WORK STA. 153+27.92
BUTT JOINT
+43.28 35.0' LT
+35.79 35.9' LT END WALK
+58.26 22.1' RT END WALK
+68.26 23.0' RT
+53+86.76
ECC +35.79
96" RCP TO REMAIN
24" RCP
15" RCP
21" RCP
24" FRA_040_12.82_005
96" TO REMAIN 96" RCP
OVERHEAD SIGNS
CONC. PAD
CONC. WALK
BRICK POST
METAL FENCE DND
EX. INLET DND
EX. EV CHARGER DND
COLUMBUS DOWNTOWN HIGH SCHOOL STADIUM
8" W/ ABANDONED
8" F 2.116 TBA
4" WL ABANDONED
AEP 1308
48" BRICK
8" COC DOW#16-124
WV PER SUE LEVEL C
WV PER SUE LEVEL B
SUE LEVEL B
78" CS
EX. WALL 7W5 FRA-70-14.56
COC DOT UNDERGROUND MULTIPAIR COPPER CABLE
(DND)
BUTT JOINT

A STA. 36+42.11, ℄ CONST. FULTON ST. = STA. 154+30.37, ℄ CONST. FOURTH ST.

B = COC DOT U.G. MULTIPAIR CABLE

C107 CURVE DATA
P.I. Sta. 38+66.00
Δ = 2° 38' 22" (LT)
Dc = 2° 00' 00"
R = 2,864.80'
T = 66.00'
L = 131.97'
E = 0.76'
C = 131.96'
C.B. = N 80° 38' 28" E

HORIZONTAL SCALE IN FEET
0 10 20 40
CALCULATED
CHECKED

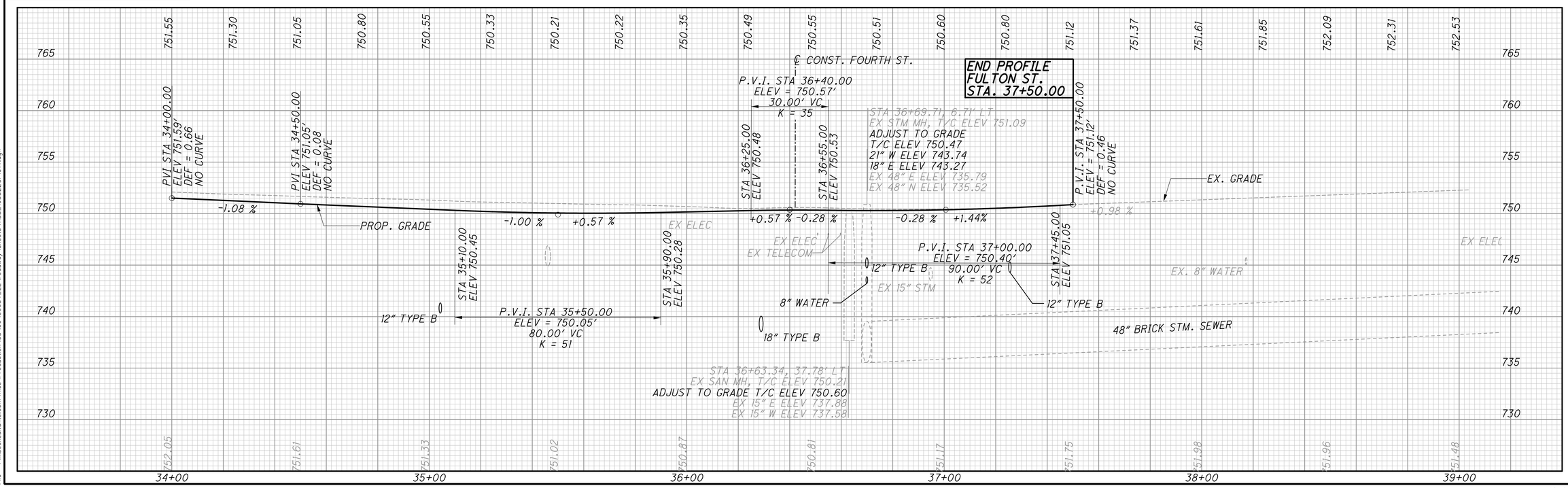

PLAN AND PROFILE - FULTON ST.
STA. 34+00.00 TO STA. 39+00.00

FRA-70-14.54

721
2317

ms consultants, inc.

PLOT.CEL

ms consultants, inc.
msconsultants.com

Ohio DOT Workspace
70\71 East Interchange 2E
www.msconsultants.com

1" 0 0.5"

ODF: ohdot\V8i
PCF: 60-06634_2E_Columbus

Batchplot Spec: \\msconsultants.com\files\production\03\60\06634_2E\standards\plotdrv\batchplt.spc
Pen Table: N:\03\60\06634_2E\standards\tables\V8i_ms_std_06634_2D_Plan View.tbl
Plot Driver: \\msconsultants.com\files\Standards\ustn\ohdot\v8i\ms\plotting\PDF.pltdrv

34" x 22"

View: FENCE_VIEW1
By: jdougas
Model: Sheet @ 2:08:14 PM
Printed: 8/1/2018
File: N:\03\60\06634_2E\roadway\sheets\1169_105322G0140.dgn

CALCULATED AMF
CHECKED CSR

ESTIMATED QUANTITIES

FRA-70-14.54

REF. NO.	SHEET NO.	STATION FROM	STATION TO	SIDE	202 VALVE BOX REMOVED	202 PAVEMENT REMOVED	202 WALK REMOVED		202 CURB REMOVED	202 PIPE REMOVED, 24" AND UNDER	202 MANHOLE REMOVED	202 INLET REMOVED	202 FENCE REMOVED	608 4" CONCRETE WALK	608 8" CONCRETE WALK	608 DETECTABLE WARNING, AS PER PLAN	608 WALKWAY MISC.: COLUMBUS. CURB RAMP, TYPE A, AS PER PLAN	608 WALKWAY MISC.: BRICK PAVER WALK, AS PER PLAN	SPECIAL HEAVY DUTY VALVE BOX ADJUSTED TO GRADE (COL. 807)					
					EACH	SQ YD	SQ FT		FT	FT	EACH	EACH	FT	SQ FT	SQ FT	SQ FT	EACH	SQ FT	EACH					
R-1	721	155+20.00 (FOURTH)	37+50.00	LT/RT					147															
R-2	721	154+75.31 (FOURTH)	154+85.90 (FOURTH)	LT						26		1												
R-3	721	154+84.03 (FOURTH)		LT	1																			
R-4	721	34+06.66	35+03.89	LT					119															
R-5	721	34+06.21	35+15.26	LT			1823																	
R-6	721	35+74.20	36+15.62	LT					76															
R-7	721	35+65.09	36+15.62	LT			1293																	
R-8	721	36+01.61		LT	1																			
R-9	721	36+68.55	37+50.00	LT			2306																	
R-10	721	34+00.00	36+16.92	RT					262															
R-11	721	36+06.52	36+16.37	RT			236																	
R-12	721	36+55.37	37+50.00	RT					140															
R-13	721	36+55.37	36+64.92	RT			1294																	
R-14	721	36+83.60		LT	1																			
R-15	721	37+41.82		LT	1																			
R-18	721	34+00.00	36+06.00	RT									256											
R-19	721	36+88.91	37+50.00	RT									61											
R-21	721	35+59.15	36+86.40	RT						128		1												
R-22	721	36+86.40	37+23.28	RT						64	1	2												
R-23	721	154+80.00		RT						46		1												
R-24	721	34+00.00	38+00.00	LT/RT		2070																		
SW-1	721	34+06.59	34+31.77	LT											558	8	1							
SW-2	721	34+31.77	35+15.26	LT										1999										
SW-3	721	35+15.26	35+86.12	LT										1696										
SW-4	721	35+86.12	35+88.12	LT											48									
SW-5	721	35+88.12	36+15.63	LT												16	2	648						
SW-6	721	36+00.63	36+15.63	LT										312										
SW-7	721	36+58.13	36+82.81	LT										515										
SW-8	721	36+58.13	36+99.42	LT												16	2	793						
SW-9	721	36+99.42	37+50.00	LT										987										
SW-10	721	35+89.96	36+17.09	RT											439	16	2							
SW-11	721	36+06.20	36+17.09	RT										504										
SW-12	721	36+55.08	36+65.09	RT										197										
SW-13	721	36+55.08	36+95.12	RT											562	16	2							
SW-14	721	36+95.12	37+50.00	RT										584										
W-1	721	34+04.17	34+04.17	LT															2					
W-2	721	35+47.77	35+47.77	LT															1					
W-3	721	36+14.23	36+14.23	LT															1					
W-4	721	36+32.66	36+32.66	LT															1					
W-5	721	36+31.37	36+31.37	LT															1					
W-6	721	155+03.18	155+03.18	LT															1					
W-7	721	36+84.40		RT															1					
W-8	721	155+03.18 (FOURTH)		LT															1					
TOTALS CARRIED TO SUB-SUMMARY					4	2070	6952		744	264	1	5	317	6794	1607	72	9	1441	9					

722
2317

PLOT.CEL

ms consultants, inc.
rmsconsultants.com

Ohio DOT Workspace
70\71 East Interchange 2E
www.rmsconsultants.com

1"
0
0.5"

PDF: ohdot\V8i
PDF: 60-06634_2E_Columbus

Batchplot Spec: \\rmsconsultants.com\Files\Production\03\60\06634_2E\standards\ohdot\batchplt.spc
Pen Table: \\rmsconsultants.com\Files\Standards\ustn\ohdot\V8i\ms\plotting\pen\V8i_ms_std.tbl
Plot Driver: \\rmsconsultants.com\Files\Standards\ustn\ohdot\v8i\ms\plotting\PDF.pltcfg

Model: Sheet
Printed: 1/17/2019 @ 1:32:17 PM
File: \\rmsconsultants.com\Files\Production\03\60\06634_2E\roadway\sheets\1190_1053220141.dgn

View: FENCE_VIEW1
By: dhall

34" x 22"

REF. NO.	SHEET NO.	STATION FROM	STATION TO	SIDE	252 FULL DEPTH PAVEMENT SAWING	607 FENCE, TYPE CL	609 CURB, MISC.: STRAIGHT 18" GRANITE CURB, AS PER PLAN "A"	609 CURB, MISC.: COLUMBUS 18" CONCRETE CURB, AS PER PLAN	611 6" CONDUIT, TYPE B, AS PER PLAN	611 12" CONDUIT, TYPE B, AS PER PLAN			611 18" CONDUIT, TYPE B, AS PER PLAN		611 MANHOLE ADJUSTED TO GRADE		611 INLET, MISC.: CITY OF COLUMBUS DOUBLE CURB AND GUTTER INLET	611 INLET, MISC.: CITY OF COLUMBUS STANDARD CURB AND GUTTER INLET FOR GRANITE CURBING	611 INLET, MISC.: CITY OF COLUMBUS DOUBLE CURB AND GUTTER INLET FOR GRANITE CURBING	611 INLET, MISC.: CITY OF COLUMBUS 60" CURB INLET FOR GRANITE CURBING	611 MANHOLE, MISC.: CITY OF COLUMBUS, MANHOLE, TYPE C	839 TRENCH DRAIN WITH PEDESTRIAN GRATE		
		FROM	TO		FT	FT	FT	FT	FT	FT			FT		EACH		EACH	EACH	EACH	EACH	EACH	FT		
D-1	721	35+00.78	35+54.90	LT					55													7		
D-2	721	35+00.78	35+06.00	LT/RT						37										1				
D-3	721	35+05.78	35+06.00	RT						6								1						
D-4	721	35+06.00	35+60.19	RT									54								1			
D-5	721	35+60.19	35+60.19	RT						6									1					
D-6	721	35+60.19	36+69.71	LT/RT									111								1			
D-7	721	36+79.41	36+69.71	LT						19								1						
D-8	721	36+69.71	36+70.83	LT/RT						25							1							
D-9	721	36+69.71		LT											1									
D-10	721	37+09.04		LT											1									
D-14	721	154+91.83 (FOURTH)	154+98.00 (FOURTH)	LT&RT						34							1							
D-15	721	154+98.00 (FOURTH)	154+98.00 (FOURTH)	RT						18					1		1							
SA-1	721	36+63.20	36+63.20	LT											1									
SA-2	721	36+37.11	36+37.11	LT											1									
P-1	721	37+50.00		LT/RT	75																			
C-1	721	34+06.01	36+16.04	LT			252	28																
C-2	721	155+20.00	37+50.00	LT			62	35																
C-3	721	34+00.00	36+17.48	RT			190	100																
C-4	721	153+58.26	37+50.00	RT			50	89																
F-1	721	34+00.00	36+06.00	RT		250																		
F-2	721	36+88.91	37+50.00	RT		61																		
TOTALS CARRIED TO SUB-SUMMARY					75	311	554	252	55	145			165		5		3	2	1	1	2	7		

CALCULATED AMF
CHECKED CSR

ESTIMATED QUANTITIES

FRA-70-14.54

723
2317

34" x 22"
Model: Sheet View: FENCE_VIEW1
Printed: 9/28/2018 @ 12:48:43 PM By: hbrendlinger
File: N:\03\60\06634_2E\roadway\sheets\1053220F064.dgn
Batchplot Spec: \\msconsultants.com\files\production\03\60\06634_2E\standards\plotdrv\batchplt.spc
Pen Table: N:\03\60\06634_2E\standards\tables\V8i_ms_std_06634_2D_Plan View.tbl
Plot Driver: \\msconsultants.com\files\Standards\ustn\ohdot\v8i\ms\plotting\PDF.pltcfg
DGF: ohdotV8i
PCF: 60-06634_2E_Columbus
Ohio DOT Workspace
70\71 East Interchange 2E
0 1" 0.5"
ms consultants, inc.
msconsultants.com
PLOT.CEL
www.msconsultants.com

FOR PLAN VIEW SEE SHEETS 635-644

MATCH LINE STA. 891+00.00

PROPOSED PROFILE MOOBERRY STREET

PROP 12" STM

PROP 8" WATER

STA 891+80.00
ELEV 780.56

MOOBERRY ST ℄ 892+35.21 =
CHILDRENS AVE @ 692+27.59

+2.80 %

+0.64 %

P.V.I. STA 892+80.00
ELEV = 783.56
SSD = 598'
K = 92

200.00' VC

PROP 12" STM

PROP 12" WATER

ADJUST TO GRADE, T.C. ELEV 784.07
12" NE & S 783.52
42" E 783.52

STA 893+80.00
ELEV 784.00

PROP 12" WATER

PROP 12" STM

ADJUST TO GRADE T.C. ELEV 784.22

PROP 12" WATER

PROP 18" STM

ADJUST TO GRADE,
T.C. ELEV 784.25
18" E 775.06

EXISTING GROUND

+0.64 %

PROP 6" WATER

MATCH LINE STA. 896+00.00 SEE SHEET 725

774.72

STA 887+83.37 MOOBERRY ST. =
STA 183+16.67 PARSONS AVE.

-1.71 %

PROP 12" WATER

STA 888+25.00
ELEV 774.01

PROP 12" STM

-1.71 %

P.V.I. STA 889+00.00
ELEV = 772.72'
K = 33

150.00' VC.

+2.80 %

PROP 6" WATER

PROP 12" STM

STA 889+75.00
ELEV 774.82

MOOBERRY ST ℄ 890+24.82 =
KIDS' DR @ 592+15.79

EXISTING GROUND

PROP 12" STM

PROPOSED PROFILE MOOBERRY STREET

+2.80 %

MATCH LINE STA. 891+00.00

PLOT.CEL

ms consultants, inc.
msconsultants.com

www.msconsultants.com

Ohio DOT Workspace
70\71 East Interchange 2E

PDF: ohdot\V8i
PCF: 60-06634_2E_Columbus

1"
0.5"
0

34" x 22"

Batchplot Spec: \\msconsultants.com\files\production\03\60\06634_2E\standards\plotdrv\batchplt.spc
Pen Table: N:\03\60\06634_2E\standards\tables\V8i_ms_std_06634_2D_Plan View.tbl
Plot Driver: \\msconsultants.com\files\Standards\ustn\ohdot\v8i\ms\plotting\PDF.pltcfg

Model: Sheet
Printed: 6/19/2018 @ 8:51:26 AM
File: N:\03\60\06634_2E\roadway\sheets\105226F065.dgn
View: FENCE_VIEW1
By: jdouglas

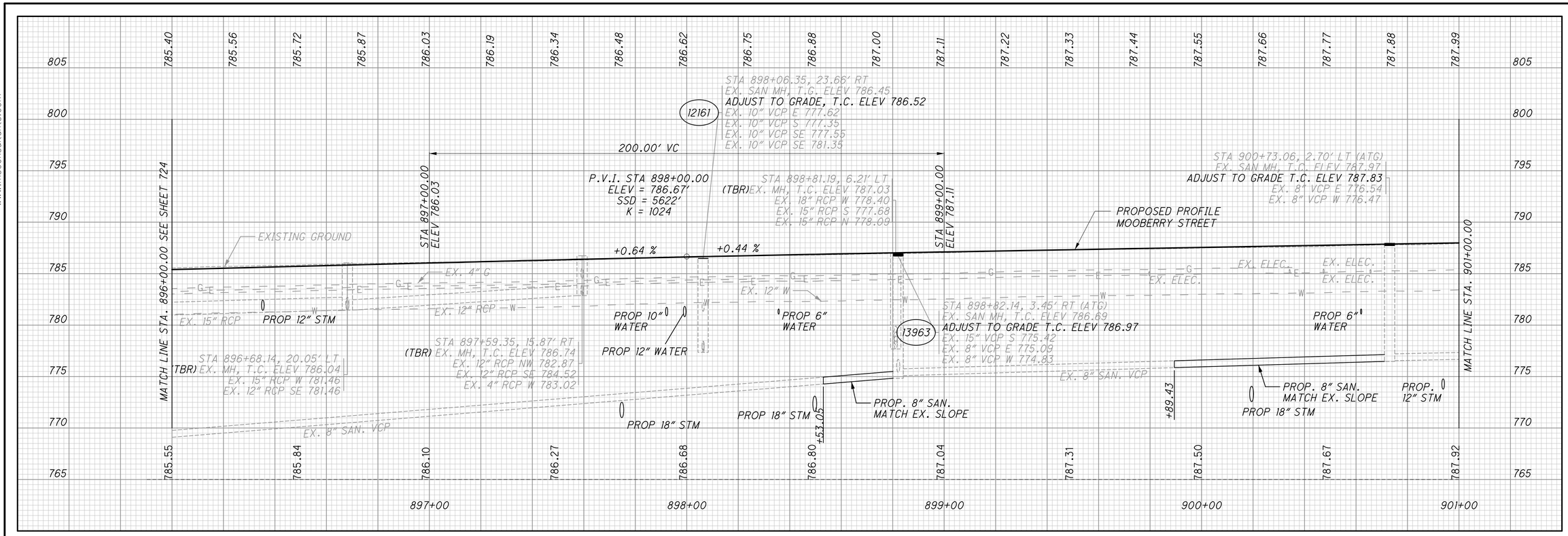

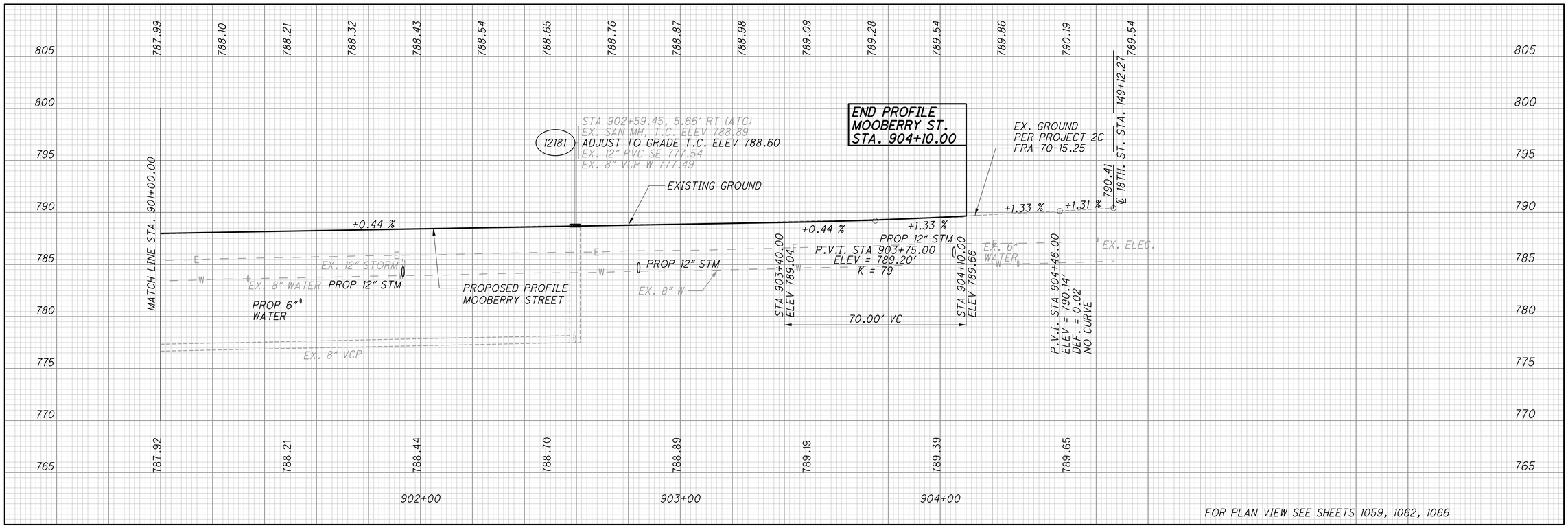

CALCULATED

CHECKED

PROFILE - MOOBERRY ST.
STA. 896+00 TO 904+66.69

FRA-70-14.54

725
2317

ms consultants, inc.

PLOT.CEL

ms consultants, inc.
msconsultants.com

CROSS REFERENCES	
SHEET NO	DESCRIPTION
	PROFILE(S)
726-729	PARSONS AVE.
1088	INTERSECTION DETAIL
1119-1120	PAVEMENT JOINT DETAIL
1260F	STORM SEWER PROFILES

Ohio DOT Workspace
70\71 East Interchange 2E
www.msconsultants.com
ohdot\Bi
60-06634_2E_Columbus

Batchplot Spec: \\msconsultants.com\files\production\03\60\06634_2E\standards\plotdrv\batchplt.spc
Pen Table: N:\03\60\06634_2E\standards\tables\V8i_ms_std_06634_2D_Plan View_NoClouds.tbl
Plot Driver: \\msconsultants.com\files\Standards\astm\ohdot\v8i\ms\plotting\PDF.pltcfg

Model: Sheet @ 10:03:04 AM View: SHEET
Printed: 2/12/2019 By: awhite
File: N:\03\60\06634_2E\roadway sheets\105322GP044.dgn

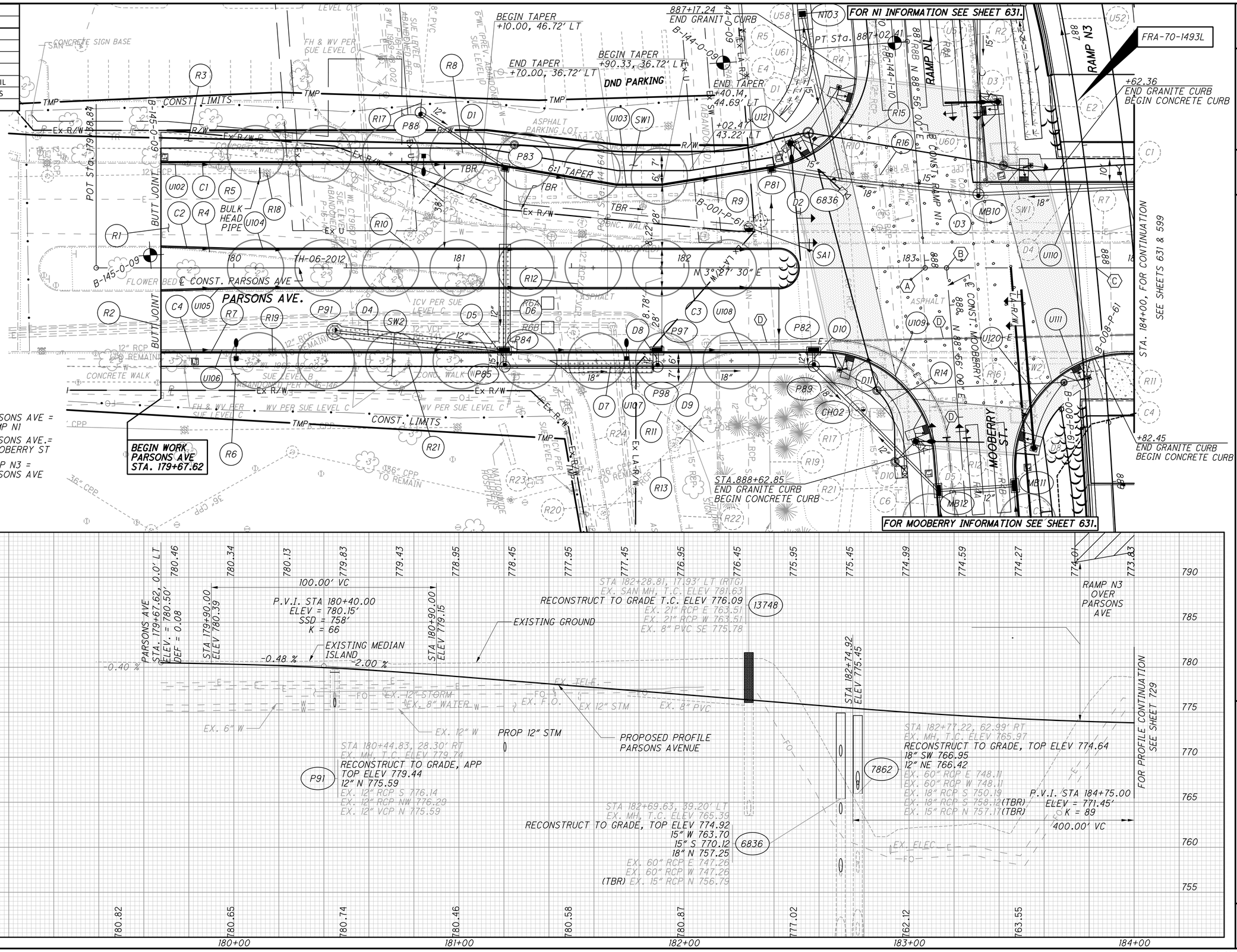

HORIZONTAL SCALE IN FEET
0 10 20 40
CALCULATED
CHECKED

PROFILE - PARSONS AVE.
STA. 179+67.62 TO STA. 184+00

FRA-70-14.54

726
2317

ms consultants, inc.

PLOT.CEL

ms consultants, inc.
msconsultants.com

Ohio DOT Workspace
70\71 East Interchange 2E
www.msconsultants.com

1" 0.5" 0

OPF: ohdot\V8i
PCF: 60-06634_2E_Columbus

Batchplot Spec: \\msconsultants.com\Files\production\Q3\60\06634_2E\standards\plotdrv\batchplt.spc
Pen Table: N:\Q3\60\06634_2E\standards\tables\V8i_ms_std_06634_2D_Plan_View.tbl
Plot Driver: \\msconsultants.com\Files\Standards\ustn\ohdot\v8i\ms\plotting\PDF.pltcfg

34" x 22"

Model: Sheet View: FENCE_VIEW1
Printed: 6/19/2018 @ 8:51:40 AM By: jdouglas
File: N:\Q3\60\06634_2E\roadway\sheets\1053220044.dgn

REF. NO.	SHEET NO.	STATION FROM	STATION TO	SIDE	202 PAVEMENT REMOVED SQ YD	202 WALK REMOVED SQ FT	202 CURB REMOVED FT	202 PIPE REMOVED, 24" AND UNDER FT	202 MANHOLE REMOVED EACH	202 CATCH BASIN REMOVED EACH	202 INLET REMOVED EACH	202 CATCH BASIN ABANDONED EACH	SPECIAL PARKING BLOCK REMOVED EACH	202 GRANITE CURB REMOVED FOR REUSE FT	252 FULL DEPTH PAVEMENT SAWING FT	202 VALVE BOX REMOVED EACH	608 4" CONCRETE WALK	608 8" CONCRETE WALK SQ FT	608 WALKWAY, MISC.: COLUMBUS CURB RAMP, TYPE A, AS PER PLAN SQ FT	608 WALKWAY, MISC.: BRICK PAVER WALK, AS PER PLAN SQ FT		608 DETECTABLE WARNING, AS PER PLAN SQ FT	609 CURB, MISC.: STRAIGHT 18" GRANITE CURB, AS PER PLAN "A" FT	609 CURB MISC.: RESET EXISTING GRANITE CURB, AS PER PLAN FT	
R1	726	179+67.62 (PAR)	182+38.10 (PAR)	L/R	1680																				
R2	726	179+67.62 (PAR)	179+67.62 (PAR)	L/R											85										
R3	726	179+67.62 (PAR)	182+37.27 (PAR)	LT		1821																			
R4	726	179+67.62 (PAR)	181+11.27 (PAR)	L/R										292											
R5	726	179+67.62 (PAR)	182+37.31 (PAR)	LT			274																		
R6	726	179+67.62 (PAR)	181+26.19 (PAR)	RT		1083																			
R7	726	179+67.62 (PAR)	181+58.45 (PAR)	RT										204											
R8	726	180+36.82 (PAR)	183+89.25 (PAR)	LT			175							251											
R9	726	181+30.08 (PAR)	182+14.69 (PAR)	LT									10												
R10	726	180+44.83 (PAR)	181+93.04 (PAR)	L/R				187	1	3															
R11	726	180+44.83 (PAR)	183+50.66 (PAR)	RT				323	2	2															
R12	726	181+54.41(PAR)	181+54.89 (PAR)	L/R				70		2															
R13	726	181+64.10 (PAR)	181+97.55 (PAR)	RT				52	1		1														
R14	726	182+87.43 (PAR)	182+97.33 (PAR)	RT				15			1														
R15	726	886+91.84 (N1)	887+65.03 (N1)	RT				82		1	1														
R16	726	182+69.63 (PAR)	183+30.92 (PAR)	LT				90		3															
R17	726	180+78.24 (PAR)	180+82.94 (PAR)	LT				54																	
R18	726	180+14.65 (PAR)		LT						1															
R19	726	180+17.17 (PAR)		RT								1													
R21	726	180+77.67 (PAR)		RT												1									
C1	726	179+67.62 (PAR)	182+76.59 (PAR)	LT																			81	251	
C2	726	179+67.62 (PAR)	182+51.17 (PAR)	L/CL																				289	
C3	726	179+67.62 (PAR)	182+51.17 (PAR)	R/CL																			286	3	
C4	726	179+67.62 (PAR)	183+10.88 (PAR)	RT																			161	204	
SW1	726	179+67.62 (PAR)	182+76.09 (PAR)	LT													1908	88	2	544		16			
SW2	726	179+67.62 (PAR)	183+10.21 (PAR)	RT													2106		2	644		16			
TOTALS CARRIED TO SUB-SUMMARY					1680	2904	449	873	4	12	3	1	10	747	85	1	4014	88	4	1188		32	528	747	

CALCULATED JAP
CHECKED TAZ

ESTIMATED QUANTITIES

FRA-70-14.54

727
2317

ms consultants, inc.

PLOT.CEL

ms consultants, inc.
msconsultants.com

www.msconsultants.com
Ohio DOT Workspace
70\71 East Interchange 2E

1" 0.5" 0

Batchplot Spec: \\msconsultants.com\files\production\03\60\06634_2E\standards\plotdrv\batchplt.spc
Pen Table: N:\03\60\06634_2E\standards\tables\V8i_ms_std_06634_2D_Plan View_NoClouds.tbl
Plot Driver: \\msconsultants.com\files\Standards\ustn\ohdot\v8i\ms\plotting\PDF.pltcfg
PDF: ohdotV8i
PDF: 60-06634_2E_Columbus

34" x 22"

Model: Sheet
Printed: 2/12/2019 @ 10:03:07 AM
File: N:\03\60\06634_2E\roadway\sheets\05322GQ044A.dgn
View: FENCE_VIEW1
By: awhite

REF. NO.	SHEET NO.	STATION FROM	STATION TO	SIDE	253 PAVEMENT REPAIR SQ YD	611 12" CONDUIT, TYPE B, AS PER PLAN FT	611 12" CONDUIT, TYPE C, AS PER PLAN FT	611 15" CONDUIT, TYPE B, AS PER PLAN FT	611 15" CONDUIT, TYPE C, AS PER PLAN FT	611 18" CONDUIT, TYPE B, AS PER PLAN FT	611 18" CONDUIT, TYPE C, AS PER PLAN FT		611 MANHOLE ADJUSTED TO GRADE EACH	611 MANHOLE RECONSTRUCTED TO GRADE EACH	611 MANHOLE, MISC.: MANHOLE REHABILITATION EACH	611 INLET, MISC.: CITY OF COLUMBUS DOUBLE CURB AND GUTTER INLET FOR GRANITE CURBING EACH	611 INLET, MISC.: CITY OF COLUMBUS STANDARD CURB AND GUTTER INLET FOR GRANITE CURBING EACH	611 MANHOLE, MISC.: CITY OF COLUMBUS, MANHOLE, TYPE C EACH
		RAMP N1 - (N1) PARSONS AVE. - (PAR)																
D1	726	180+82.94 (PAR)	181+20.70 (PAR)	LT		45												1
D2	726	182+38.82 (PAR)	887+61.27 (N1)	LT				31									1	
D3	726	887+61.27 (N1)	887+72.52 (N1)	L/R						62				1				1
D4	726	180+44.95 (PAR)	181+20.25 (PAR)	RT	43	76							1					
D5	726	181+20.25 (PAR)	181+20.39 (PAR)	RT					7							1		
D6	726	181+20.70 (PAR)	181+20.25 (PAR)	L/R	28	82											1	
D7	726	181+20.39 (PAR)	181+88.27 (PAR)	RT	25						68							1
D8	726	181+88.02 (PAR)	181+88.27 (PAR)	RT			7									1		
D9	726	181+88.27 (PAR)	182+57.73 (PAR)	RT							69							1
D10	726	182+57.58 (PAR)	182+57.73 (PAR)	RT			7									1		
D11	726	182+57.73 (PAR)	182+77.22 (PAR)	RT							27			1				1
SA1	726	182+28.81 (PAR)		LT										1	1			
TOTALS CARRIED TO SUB-SUMMARY					96	203	14	31	7	62	164		1	3	1	3	2	5

CALCULATED JAP
CHECKED TAZ

ESTIMATED QUANTITIES

FRA-70-14.54

728
2317

ms consultants, inc.

PLOT.CEL

ms consultants, inc.
msconsultants.com

www.msconsultants.com

Ohio DOT Workspace
70\71 East Interchange 2E

0 0.5" 1"

Batchplot Spec: \\msconsultants.com\files\production\03\60\06634_2E\standards\plotdrv\batchplt.spc
Pen Table: N:\03\60\06634_2E\standards\tables\V8i_ms_std_06634_2D_Plan View.tbl
Plot Driver: \\msconsultants.com\files\Standards\ustn\ohdot\v8i\ms\plotting\PDF.pltdrg
DGN: ohdotV8i
PCF: 60-06634_2E_Columbus

Model: Sheet
Printed: 6/19/2018 @ 8:52:08 AM
File: N:\03\60\06634_2E\roadway\sheets\1053220f066.dgn
View FENCE_VIEW1
By: jdoughas

34" x 22"

773.83 773.71 773.67 773.69 773.78 773.95 774.18 774.49 774.86 775.31 775.82 776.40 777.02 777.64 778.26 778.88 779.50 780.12 780.74 781.36 781.97

820 815 810 805 800 795 790 785 780 775 770 765 760 755 750 745 740

I-70 EB
I-70 WB
I-70
OVER PARSONS AVE

END PROFILE PARSONS AVE STA. 184+99.34	BEGIN TRANS. PARSONS AVE. SEE SHEET 731

MATCH LINE STA. 184+00.00 SEE SHEET 726

773.78

EXISTING GROUND

-2.00 %
+2.48 %

PROP 12" STM

P.V.I. STA 184+75.00
ELEV = 771.45'
K = 89
400.00' VC

STA 187+06.76, 1.19' RT
EX. MH, T.C. ELEV 772.77
EX. 15" RCP S 768.20

FUTURE BRIDGE
PROJECT 2D
FRA-70-14.48

PROPOSED FUTURE PROFILE
PROJECT 2D
FRA-70-14.48

STA 186+75.00
ELEV 776.40

RAMP Q3
UNDER PARSONS AVE

EX. ELEC.

FUTURE
RAMP Q3

778.86 777.51 776.03 774.57 773.48 772.68 772.35 773.20 757.74 755.10 756.34

184+00 185+00 186+00 187+00 188+00 189+00

CALCULATED | CHECKED

PROFILE - PARSONS AVE.
STA. 184+00.00 TO STA. 189+00.00

FRA-70-14.54

729
2317

ms consultants, inc.

PLOT.CEL

ms consultants, inc.
msconsultants.com

Ohio DOT Workspace
70\71 East Interchange 2E

www.msconsultants.com

1"
0.5"
0

OPF: ohdot\V8i
PCF: 60-06634_2E_Columbus

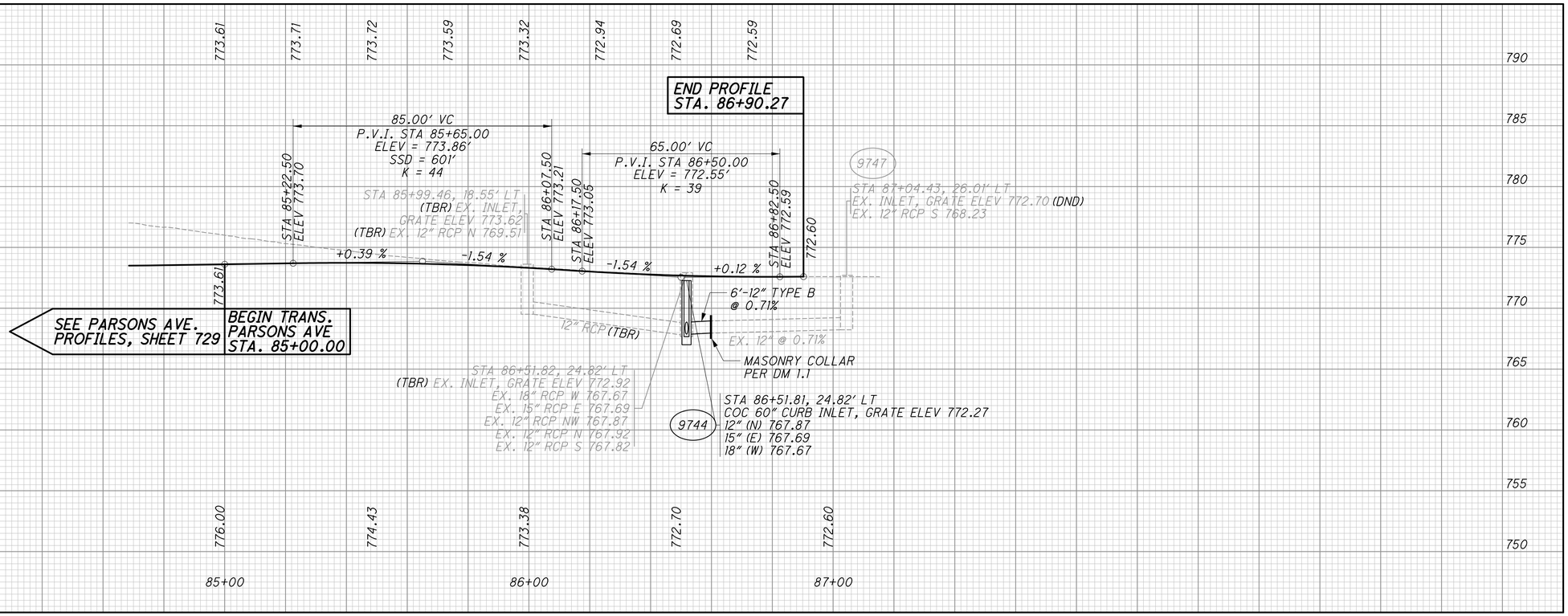

CALCULATED | CHECKED

PROFILE - TRANS. PARSONS AVE.
STA. 85+00.00 TO STA 86+90.27

FRA-70-14.54

730
2317

ms consultants, inc.

Batchplot Spec: \\msconsultants.com\files\production\03\60\06634_2E\standards\plotdir\batchplt.spc
Pen Table: N:\03\60\06634_2E\standards\tables\V8i_ms_std_06634_2D_Plan View.tbl
Plot Driver: \\msconsultants.com\files\Standards\ustn\ohdot\v8i\ms\plotting\PDF.pltcfg

Model: 105322GF076 @ 8:52:10 AM View: FENCE_VIEW1
Printed: 6/19/2018 By: jdouglas
File: N:\03\60\06634_2E\roadway\sheets\105322GF076.dgn

34" x 22"

34" x 22"

Model: Sheet View: SHEET
Printed: 6/19/2018 @ 8:52:28 AM By: jdouglas
File: \\msconsultants.com\files\Production\03\60\06634_2E\roadway\sheets\105322GP045.dgn

Batchplot Spec: \\msconsultants.com\files\production\03\60\06634_2E\standards\plotdrv\batchplt.spc
Pen Table: N:\03\60\06634_2E\standards\tables\V8i_ms_std_06634_2D_Plan View.tbl
Plot Driver: \\msconsultants.com\files\Standards\ustn\ohdot\v8i\ms\plotting\PDF.pltcfg

0 0.5" 1"

DGF: ohdotV8i
PCF: 60-06634_2E_Columbus

Ohio DOT Workspace
70\71 East Interchange 2E

PLOT.CEL

ms consultants, inc.
msconsultants.com

www.msconsultants.com

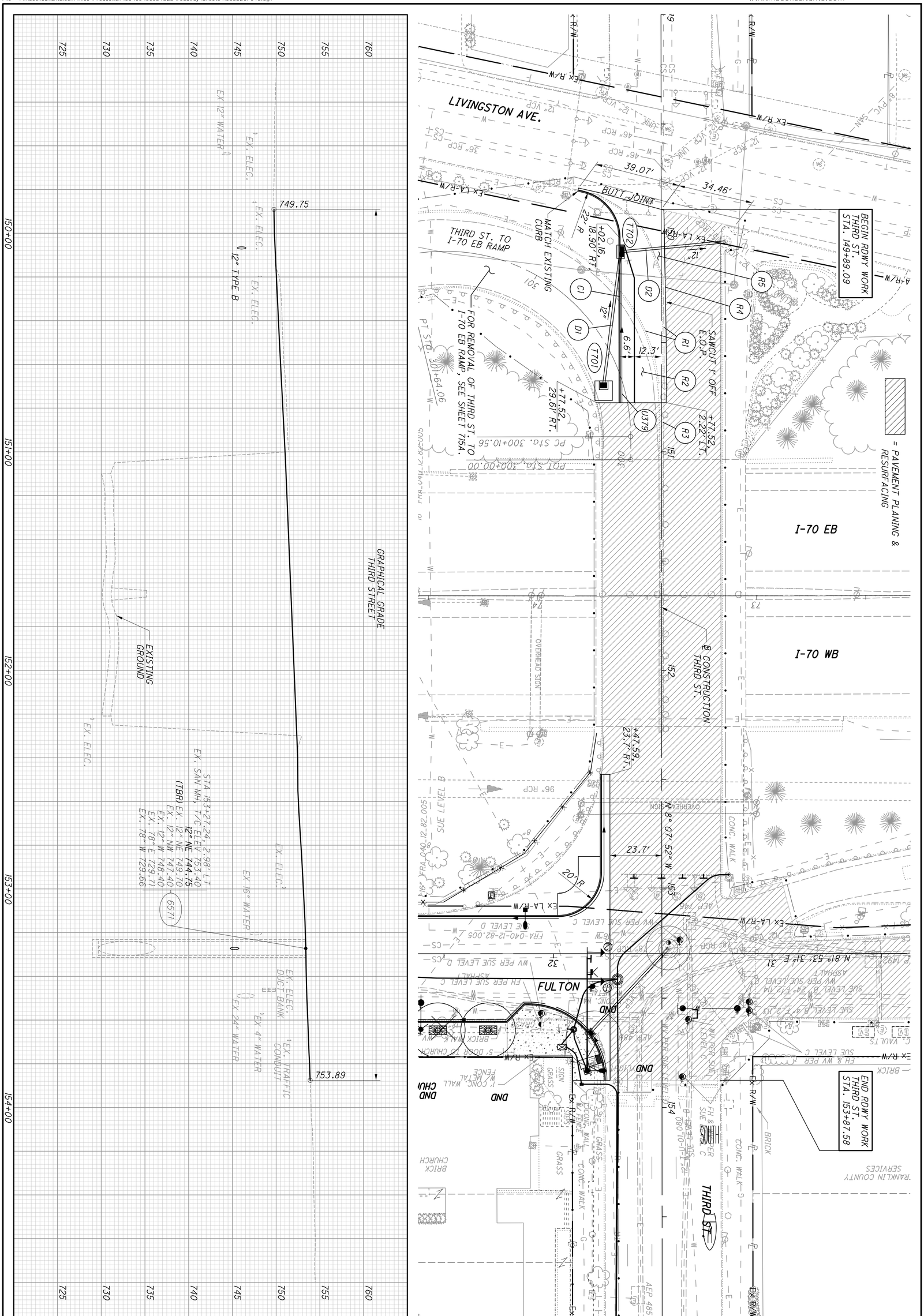

FRA-70-14.54

PLAN AND PROFILE - THIRD ST.
STA. 149+89.09 TO STA. 153+87.58

CALCULATED
CHECKED

0 10 20 40
HORIZONTAL SCALE IN FEET

N

ms consultants, inc.

PLOT.CEL

ms consultants, inc.
msconsultants.com

www.msconsultants.com

Ohio DOT Workspace
70\71 East Interchange 2E

1" 0.5" 0

PDF: ohdot\V8i
PDF: 60-06634_2E_Columbus

34" x 22"

Batchplot Spec: \\msconsultants.com\files\Production\03\60\06634_2E\standards\plotdr\batchplt.spc
Pen Table: \\msconsultants.com\files\Standards\astm\ohdot\V8i\ms\plotting\pen\V8i_ms_std.tbl
Plot Driver: \\msconsultants.com\files\Standards\astm\ohdot\v8i\ms\plotting\PDF.pltcfg

Model: Sheet
Printed: 6/19/2018 @ 8:52:30 AM
File: \\msconsultants.com\files\Production\03\60\06634_2E\roadway\sheets\10532200045.dgn
View: FENCE_VIEW1
By: jdouglas

REF. NO.	SHEET NO.	STATION		SIDE		202	202	202			252	609	611	611		611										
		THIRD ST. - (THRD)				PAVEMENT REMOVED	CONCRETE MEDIAN REMOVED	CURB REMOVED			FULL DEPTH PAVEMENT SAWING	CURB, MISC.: COLUMBUS 18" CONCRETE CURB, AS PER PLAN	12" CONDUIT, TYPE B	CATCH BASIN, NO. 5		INLET, MISC.: CITY OF COLUMBUS DOUBLE CURB AND GUTTER INLET										
		FROM	TO			SQ YD	SQ YD	FT			FT	FT	FT	EACH		EACH										
R1	731	149+89.09	150+68.41	LT/RT				154																		
R2	731	150+31.56	150+77.52	RT		507																				
R3	731	150+68.41	152+27.74	LT/RT			259																			
R4	731	149+89.09	150+77.52	LT/RT							120															
R5	731	149+79.26	150+77.52	LT/RT		372																				
C1	731	149+80.25	150+77.52	RT								105														
D1	731	150+08.44	150+69.52	RT									62	1												
D2	731	150+03.96	150+08.44	LT/RT									48			1										
TOTALS CARRIED TO SUB-SUMMARY						879	259	154			120	105	110	1		1										

CALCULATED JAP
CHECKED TAZ

ESTIMATED QUANTITIES

FRA-70-14.54

732
2317

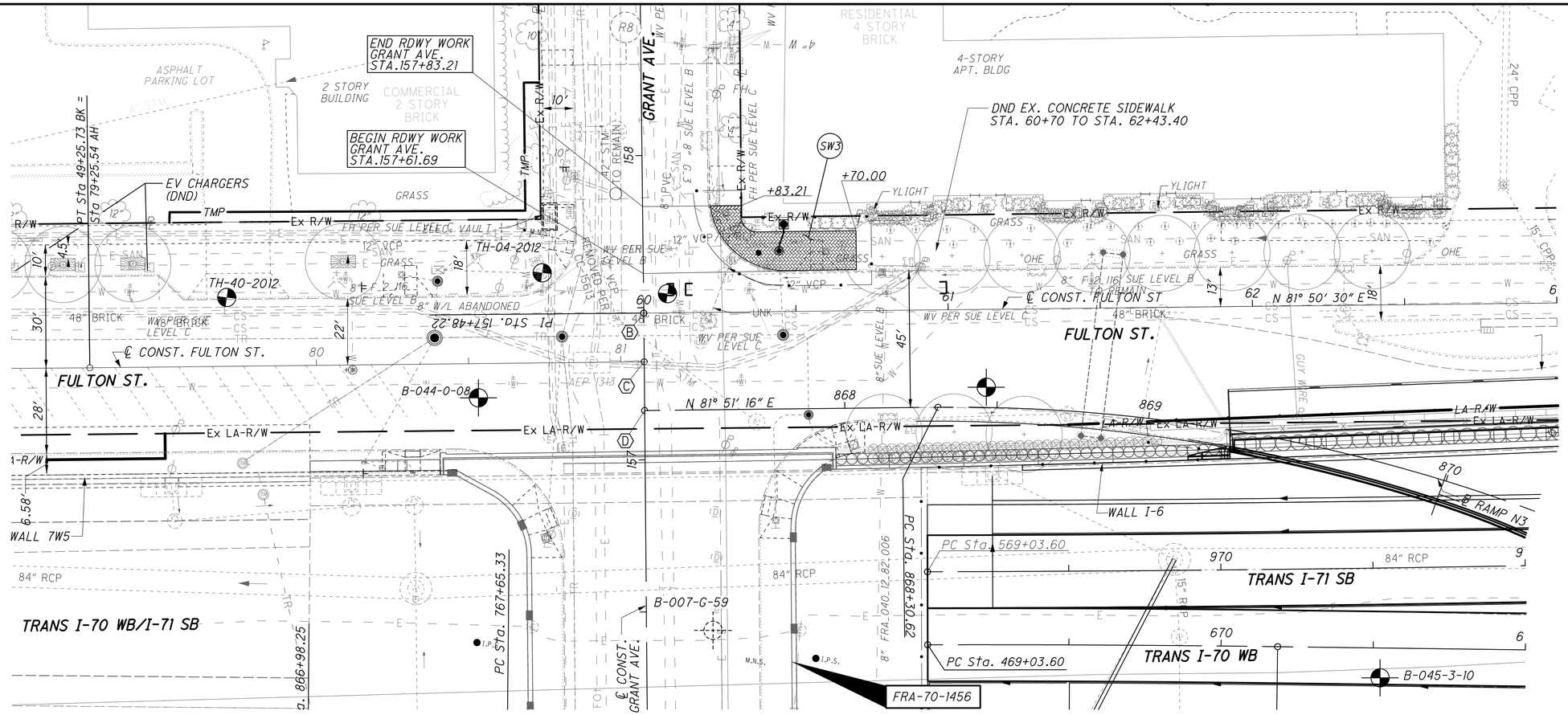

SEE SHEET 588 FOR I-70 / I-71 INFORMATION

SEE SHEET 1094 FOR INTERSECTION DETAIL

(B) STA 157+48.22 ℄ GRANT AVE =
STA 60+00.00 ℄ FULTON ST

(C) STA 157+32.22 ℄ GRANT AVE =
STA 81+07.69 ℄ FULTON ST

(D) STA 157+16.22 ℄ GRANT AVE =
STA 867+34.23 ℄ RAMP N3

PLOT.CEL

ms consultants, inc.
msconsultants.com

Ohio DOT Workspace
70\71 East Interchange 2E
www.msconsultants.com

Batchplot Spec: \\msconsultants.com\files\production\03\60\06634_2E\standards\plotdrv\batchplt.spc
Pen Table: \\msconsultants.com\files\Production\03\60\06634_2E\deliverables\hrb\V8i_ms_sta\tbl\ohdot\V8i
Plot Driver: \\msconsultants.com\files\Standards\ustn\ohdot\v8i\ms\plotting\PDF.pltcfg

34" x 22"

Model: Sheet
Printed: 9/13/2018 @ 2:21:48 PM
File: \\msconsultants.com\files\Production\03\60\06634_2E\roadway\sheets\105322GP037.dgn
View: FENCE_VIEW1
By: hbrendinger

HORIZONTAL SCALE IN FEET
0 10 20 40

CALCULATED
CHECKED

PLAN AND PROFILE - GRANT AVE.
STA.156+50 TO STA. 158+50

FRA-70-14.54

ms consultants, inc.

PLOT.CEL

ms consultants, inc.
msconsultants.com

www.msconsultants.com
Ohio DOT Workspace
70\71 East Interchange 2E

1" 0.5" 0

Batchplot Spec: \\msconsultants.com\files\production\03\60\06634_2E\standards\plotdrv\batchplt.SPC
Pen Table: \\msconsultants.com\files\Standards\ustn\ohdot\V8i\ms\plotting\pen\V8i_ms_std.TBL
Plot Driver: \\msconsultants.com\files\Standards\ustn\ohdot\v8i\ms\plotting\PDF.pltcfg

Model: Sheet
Printed: 6/19/2018 @ 8:52:56 AM
File: \\msconsultants.com\files\Production\03\60\06634_2E\roadway\sheets\105322G0037A.dgn

View: SHEET
By: jdouglas

34" x 22"

REF. NO.	SHEET NO.	STATION FROM	STATION TO	SIDE			202 WALK REMOVED SQ FT	608 WALKWAY MISC.: COLUMBUS CURB RAMP, TYPE A, AS PER PLAN EACH		608 WALKWAY, MISC.: BRICK PAVER WALK, AS PER PLAN SQ FT	608 DETECTABLE WARNING, AS PER PLAN SQ FT																	
		FULTON ST. - (FULTON) GRANT ST. - (GRANT) RAMP N3 - (N3)																										
SW3	274	157+61.69 (GRANT)	157+83.21 (GRANT)	RT			583	2		563	16																	
TOTALS CARRIED TO SUB-SUMMARY							583	2		563	16																	

CALCULATED JAP
CHECKED JPV

ESTIMATED QUANTITIES

FRA-70-14.54

734
2317

PLOT.CEL

ms consultants, inc.
msconsultants.com

www.msconsultants.com
Ohio DOT Workspace
70\71 East Interchange 2E
DGN: ohdot\V8i
PCF: 60-06634_2E_Columbus

Batchplot Spec: \\msconsultants.com\files\production\03\60\06634_2E\standards\plotdr\batchplt.spc
Pen Table: N:\03\60\06634_2E\standards\tables\V8i_ms_std_06634_2D_Plan View.tbl
Plot Driver: \\msconsultants.com\files\Standards\ustn\ohdot\v8i\ms\plotting\PDF.pltdrg

Model: Sheet
Printed: 6/19/2018 @ 8:53:11 AM
File: N:\03\60\06634_2E\roadway\sheets\V05322G072.dgn
View: FENCE_VIEW1
By: jdouglas

34" x 22"

CALCULATED

CHECKED

PROFILE - AMBULANCE DR. & CHILDRENS DR.
STA. 690+79.81 TO STA. 692+27.59

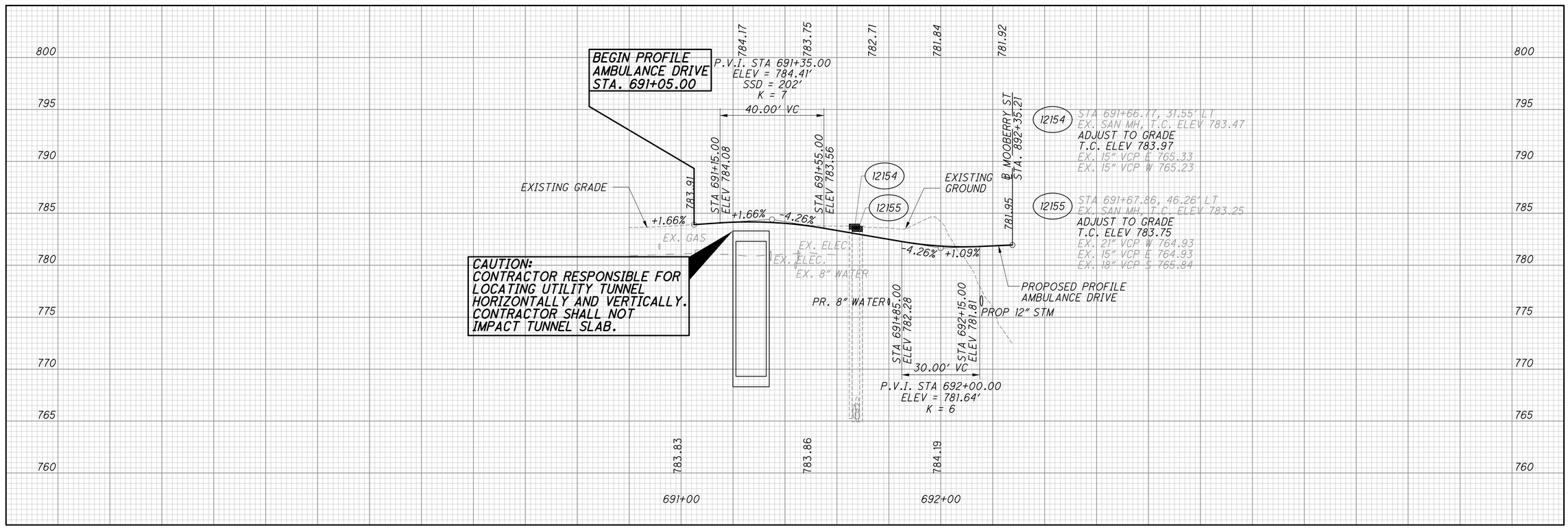

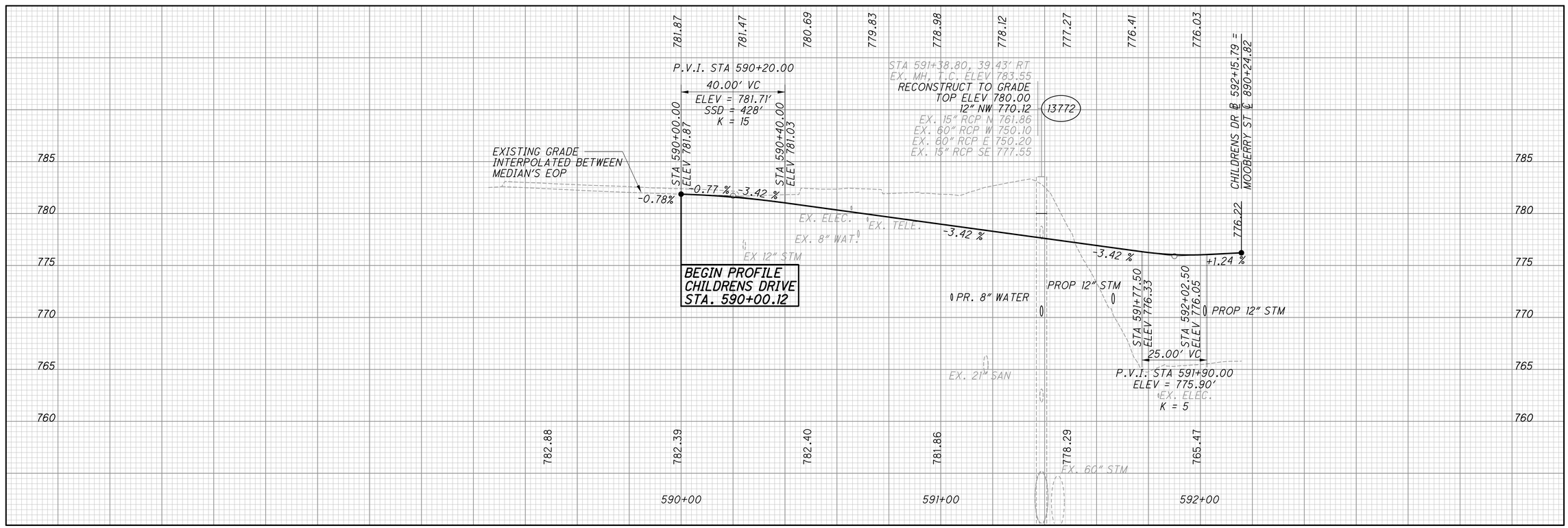

FRA-70-14.54

ms consultants, inc.

PLOT.CEL

ms consultants, inc.
msconsultants.com

www.msconsultants.com

Ohio DOT Workspace
70\71 East Interchange 2E

1"
0.5"
0

ODF: ohdot\V8i
PCF: 60-06634_2E_Columbus

34" x 22"

Batchplot Spec: \\msconsultants.com\files\production\Q3\60\06634_2E\standards\plotdrv\batchplt.spc
Pen Table: N:\Q3\60\06634_2E\standards\tables\XL001_V8i_ms_std.tbl
Plot Driver: \\msconsultants.com\files\Standards\usstn\ohdot\v8i\ms\plotting\PDF.pltcfg

Model: Sheet
Printed: 6/19/2018 @ 8:53:28 AM
File: N:\Q3\60\06634_2E\roadway\sheets\05322XL001.dgn
View: FENCE_VIEW1
By: jdouglas

CROSS SECTION SHEET INDEX

FREEWAY ROADS

TRANS I-70 EB (WEST SIDE)	752-762
I-70 EB	763-801
TRANS I-70 EB (EAST SIDE)	802-810
TRANS I-70 WB (WEST SIDE)	811-824
TRANS RAMP P2 (CENTRAL)	825-832
TRANS I-70 WB (EAST SIDE)	833-851
TRANS I-71 SB (EAST SIDE)	852-867
TRANS I-71 NB	868-871
RAMP P2	872-878
TRANS RAMP P2 EAST	879-883
TRANS RAMP N1	884-885
RAMP N1 (I-70 EB EXIT TO PARSONS AVE)	886-903
RAMP N2 (FULTON ST EB ENTRANCE TO I-71 NB)	904-907
RAMP N3 (FULTON ST EB ENTRANCE TO I-70 EB)	908-918
RAMP N4 (I-71 NB)	919-930
TRANS RAMP N4	931-933
RAMP Q3 (I-71 SB TO I-70 EB)	934-945
TRANS I-71 SB WEST SIDE)	946-961
RAMP THIRD ST. TO I-70 EB	961A-961D

CITY STREETS

FULTON ST.	962-967
MOOBERRY ST	968-982
PARSONS AVE	983-987
TRANS PARSONS AVE	988-989
THIRD ST.	989A

PRIVATE DRIVES

AMBULANCE DR/CHILDRENS DR	990
CHILDRENS DR	991-992

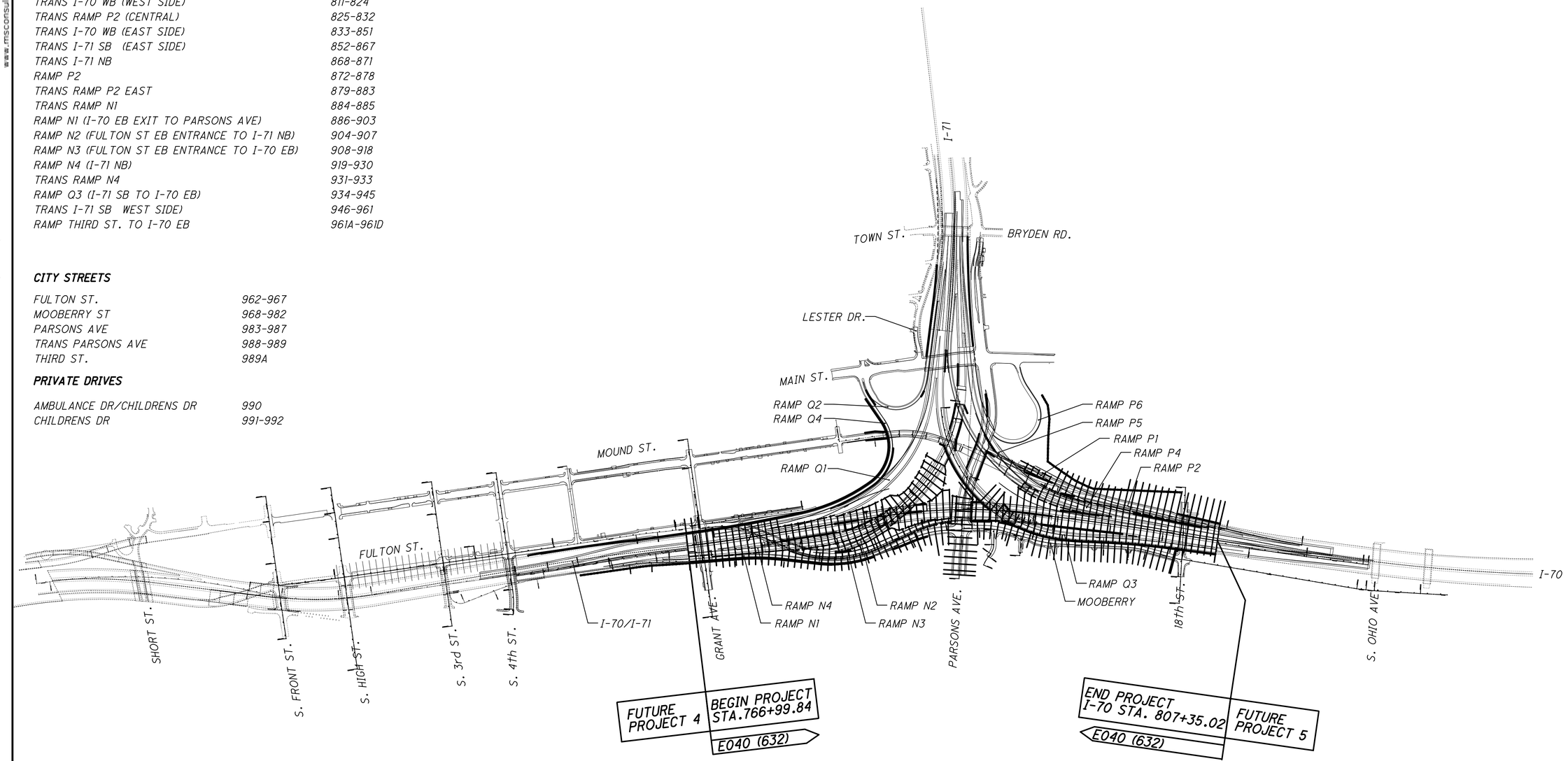

0 200 400 800 HORIZONTAL SCALE IN FEET

CALCULATED | CHECKED

CROSS SECTION LAYOUT

FRA-70-14.54

750
2317

PLOT.CEL
ms consultants, inc.
msconsultants.com
www.msconsultants.com
Ohio DOT Workspace
70\71 East Interchange 2E
ODF: ohdot\V8i
PCF: 60-06634_2E_Columbus
0 0.5" 1"
34" x 22"
Batchplot Spec: \\msconsultants.com\Files\production\03\60\06634_2E\standards\plotdrv\batchplt.spc
Pen Table: N:\03\60\06634_2E\standards\tables\V8i_ms_std_06634_2D_Plan View.tbl
Plot Driver: \\msconsultants.com\Files\Standards\usetn\ohdot\v8i\ms\plotting\PDF.pltdrv
Model: Sheet View: FENCE_VIEW1
Printed: 6/19/2018 @ 8:53:26 AM By: jdouglas
File: N:\03\60\06634_2E\roadway\sheets\105322GM043.dgn

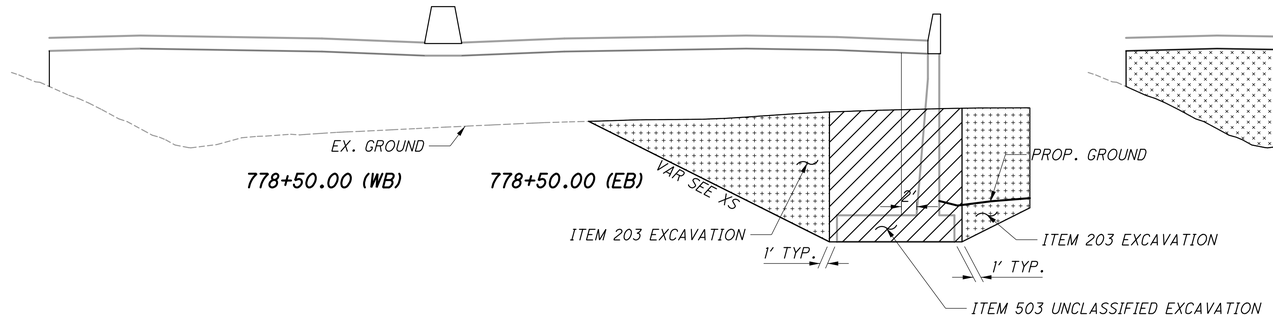

SCENARIO A: EXCAVATION

I-70 STA 778+50.00

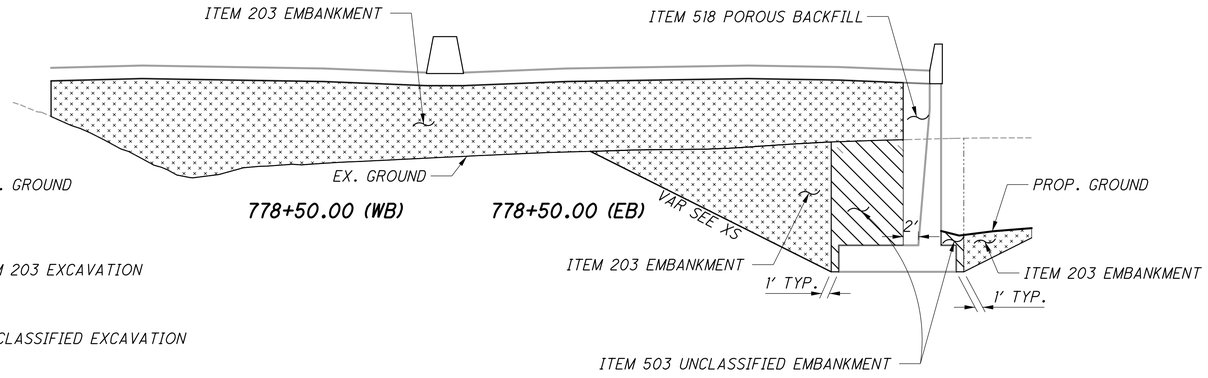

SCENARIO A: EMBANKMENT

I-70 STA 778+50.00

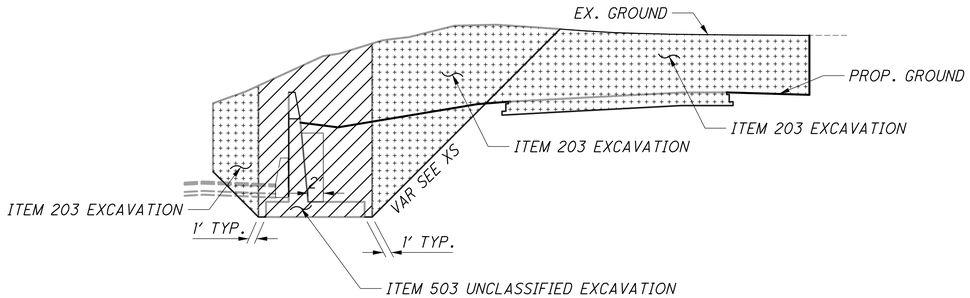

SCENARIO B: EXCAVATION

RAMP N2 STA 786+00.00

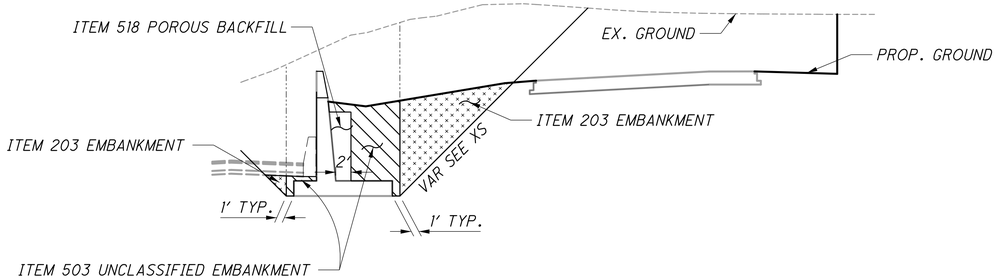

SCENARIO B: EMBANKMENT

RAMP N2 STA 786+00.00

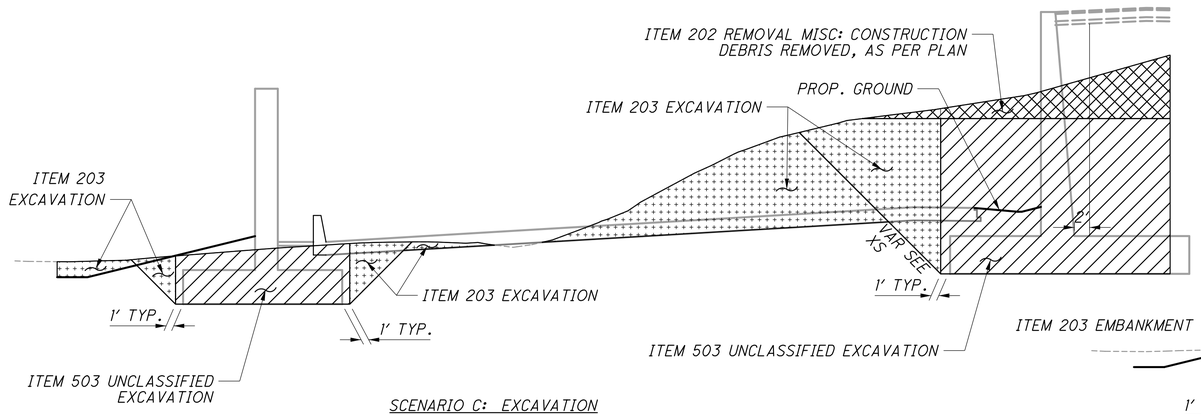

SCENARIO C: EXCAVATION

RAMP N4 STA 791+00.00

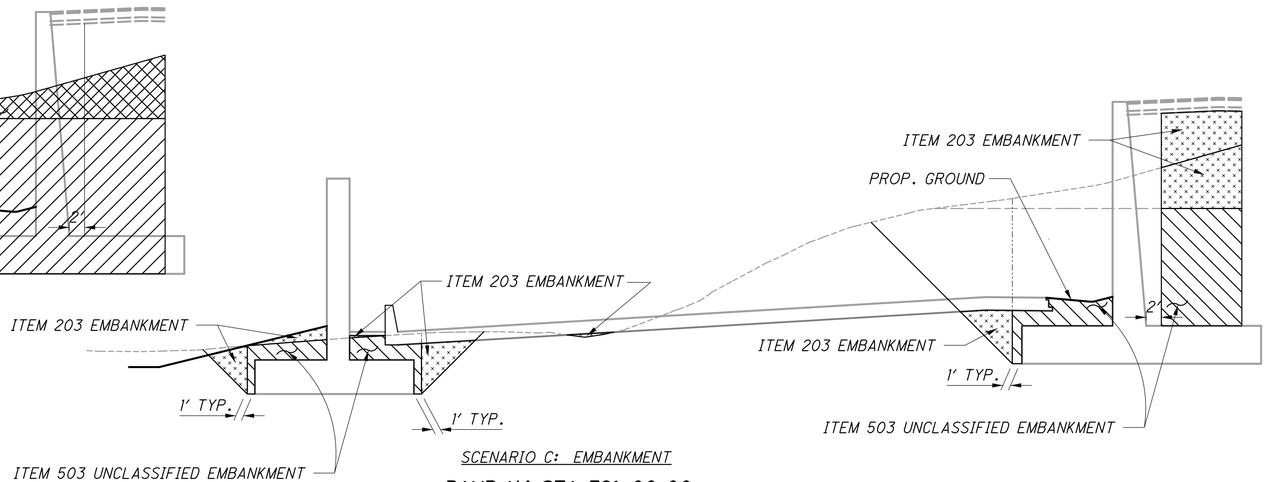

SCENARIO C: EMBANKMENT

RAMP N4 STA 791+00.00

CALCULATED DWH
CHECKED TAZ

TYPICAL CROSS SECTION CALCULATIONS DETAILS FOR WALL & PIER EXCAVATION & EMBANKMENT QUANTITIES

FRA-70-14.54

751
2317

34" x 22"

Model: Sheet
Printed: 6/19/2018 @ 8:53:28 AM
File: N:\03\60\06634_2E\roadway\sheets\105322XS1071.dgn
View: FENCE_VIEW1
By: jdouglas

Batchplot Spec: \\msconsultants.com\files\production\03\60\06634_2E\standards\plotdrv\batchplt.spc
Pen Table: \\msconsultants.com\files\Standards\ustn\ohdot\V8i\ms\plotting\pen\V8i_ms_std.tbl
Plot Driver: \\msconsultants.com\files\Standards\ustn\ohdot\v8i\ms\plotting\PDF.pltcfg

0 1"
0.5"

PCF: ohdotV8i
PCF: 60-06634_2E_Columbus

Ohio DOT Workspace
70\71 East Interchange 2E

ms consultants, inc.
msconsultants.com

PLOT.CEL

www.msconsultants.com

SEEDING
END WIDTH | SQ. YDS.

END AREA
CUT | FILL

VOLUME
CUT | FILL

SEE TRANSITIONAL W. 70 WB CROSS SECTIONS

33.3:1

736.23
736.24

857+00.00
736.55
736.52

EX. E

EX LA-R/W

752
2317

FRA-70-14.54

CROSS SECTIONS TRANS. I-70 EB (WEST SIDE)
STA. 856+50.00 TO STA. 857+00.00

CALCULATED MAH
CHECKED BSB

ms consultants, inc.

PLOT.CEL

ms consultants, inc.
msconsultants.com

SEEDING			END AREA		VOLUME	
END WIDTH	SQ. YDS.	STATION	CUT	FILL	CUT	FILL
4		858+00.00	23	0		
	25				43	0
5		857+50.00	23	0		
	29				37	2
	54				80	2

CALCULATED MAH
CHECKED BSB

CROSS SECTIONS TRANS. I-70 EB (WEST SIDE)
STA. 857+50.00 TO STA. 858+00.00

FRA-70-14.54

753
2317

ms consultants, inc.

www.msconsultants.com
Ohio DOT Workspace
70\71 East Interchange 2E
Batchplot Spec: \\msconsultants.com\files\production\03\60\06634_2E\standards\plotdrv\batchplt.spc DDF: ohdot(V8)
Pen Table: \\msconsultants.com\files\Standards\ustn\ohdot\V8\ms\plotting\pen\V8i_ms_std.tbl PCF: 60-06634_2E_Columbus
Plot Driver: \\msconsultants.com\files\Standards\ustn\ohdot\v8\ms\plotting\PDF.pltcfg
34" x 22"
Model: Sheet View: FENCE_VIEW1
Printed: 6/19/2018 @ 8:53:30 AM By: jdouglas
File: N:\03\60\06634_2E\roadway\sheets\105322XS1072.dgn

PLOT.CEL

ms consultants, inc.
msconsultants.com

www.msconsultants.com

Ohio DOT Workspace
70\71 East Interchange 2E

0 0.5" 1"

Batchplot Spec: \\msconsultants.com\files\production\03\60\06634_2E\standards\plotdrv\batchplt.spc
Pen Table: \\msconsultants.com\files\Standards\usth\ohdot\V8i\ms\plotting\pen\V8i_ms_std.tbl PCF: ohdotV8i
Plot Driver: \\msconsultants.com\files\Standards\usth\ohdot\V8i\ms\plotting\PDF.pltcfg PCF: 60-06634_2E_Columbus

Model: Sheet View: FENCE_VIEW1
Printed: 6/19/2018 @ 8:53:31 AM By: jdouglas
File: N:\03\60\06634_2E\roadway\sheets\05322XS073.dgn

34" x 22"

SEEDING	
END WIDTH	SQ. YDS.
11	48
6	28
	76

END AREA		VOLUME		
CUT	FILL	CUT	FILL	
56	5			AH
40	3			BK
29	8			AH
21	2			BK
		64	10	
		40	2	
		104	12	

CALCULATED MAH
CHECKED BSB

CROSS SECTIONS TRANS. I-70 EB (WEST SIDE)
STA. 858+50.00 TO STA. 859+00.00

FRA-70-14.54

754
2317

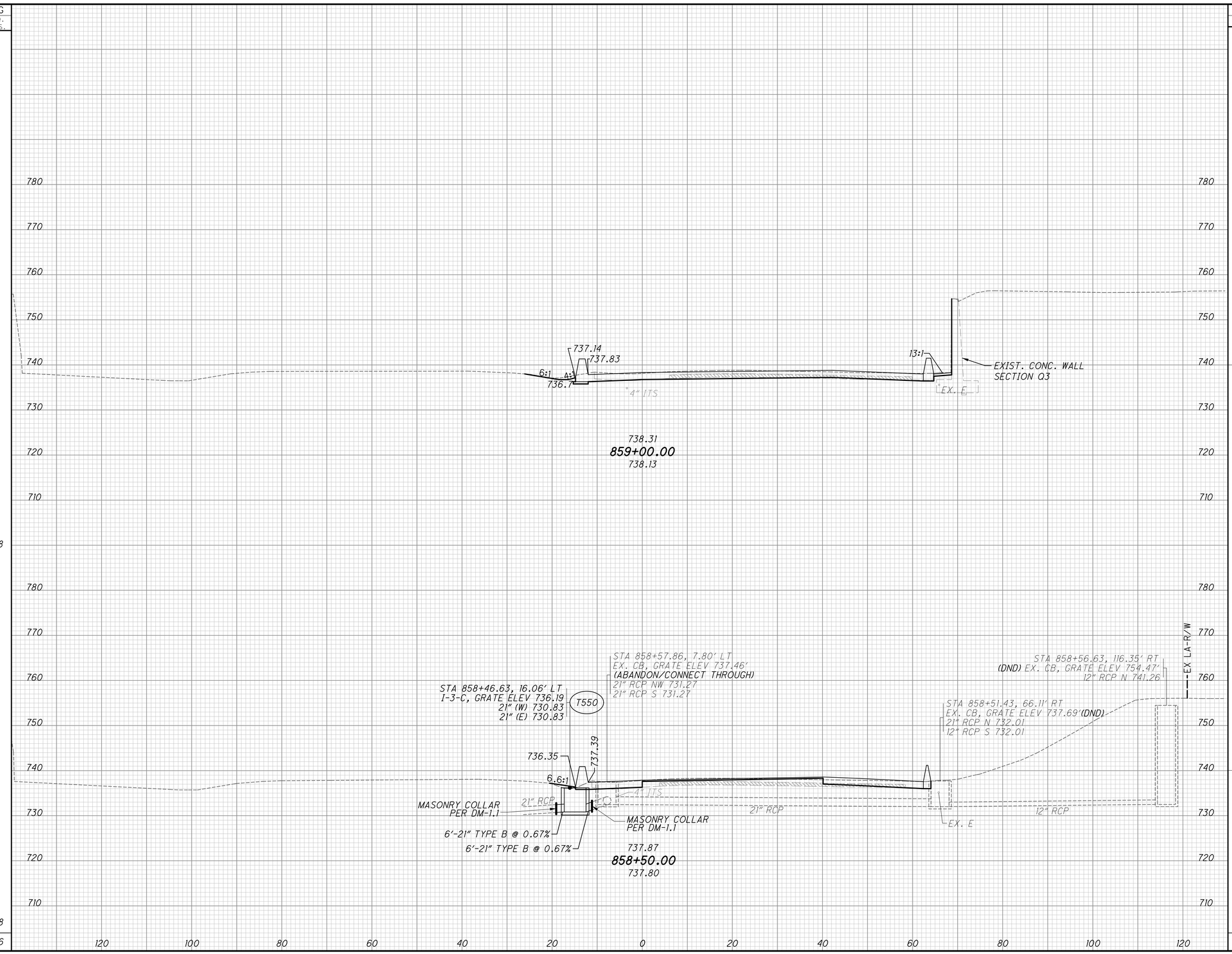

PLOT.CEL

ms consultants, inc.
msconsultants.com

www.msconsultants.com

Ohio DOT Workspace
70\71 East Interchange 2E

1" 0.5" 0

PDF: ohdot\V8i
PDF: 60-06634_2E_Columbus

Batchplot Spec: \\msconsultants.com\files\production\03\60\06634_2E\standards\ohdot\batchplt.spc
Pen Table: \\msconsultants.com\files\Standards\usth\ohdot\V8i\ms\plotting\pen\V8i_ms_std.tbl
Plot Driver: \\msconsultants.com\files\Standards\usth\ohdot\v8i\ms\plotting\PDF.pltcfg

Model: Sheet
Printed: 6/19/2018 @ 8:53:33 AM
File: N:\03\60\06634_2E\roadway\sheets\05322XS074.dgn

View: FENCE_VIEW1
By: jdouglas

34" x 22"

SEEDING	
END WIDTH	SQ. YDS.
7	
	37
6	
	48
	85

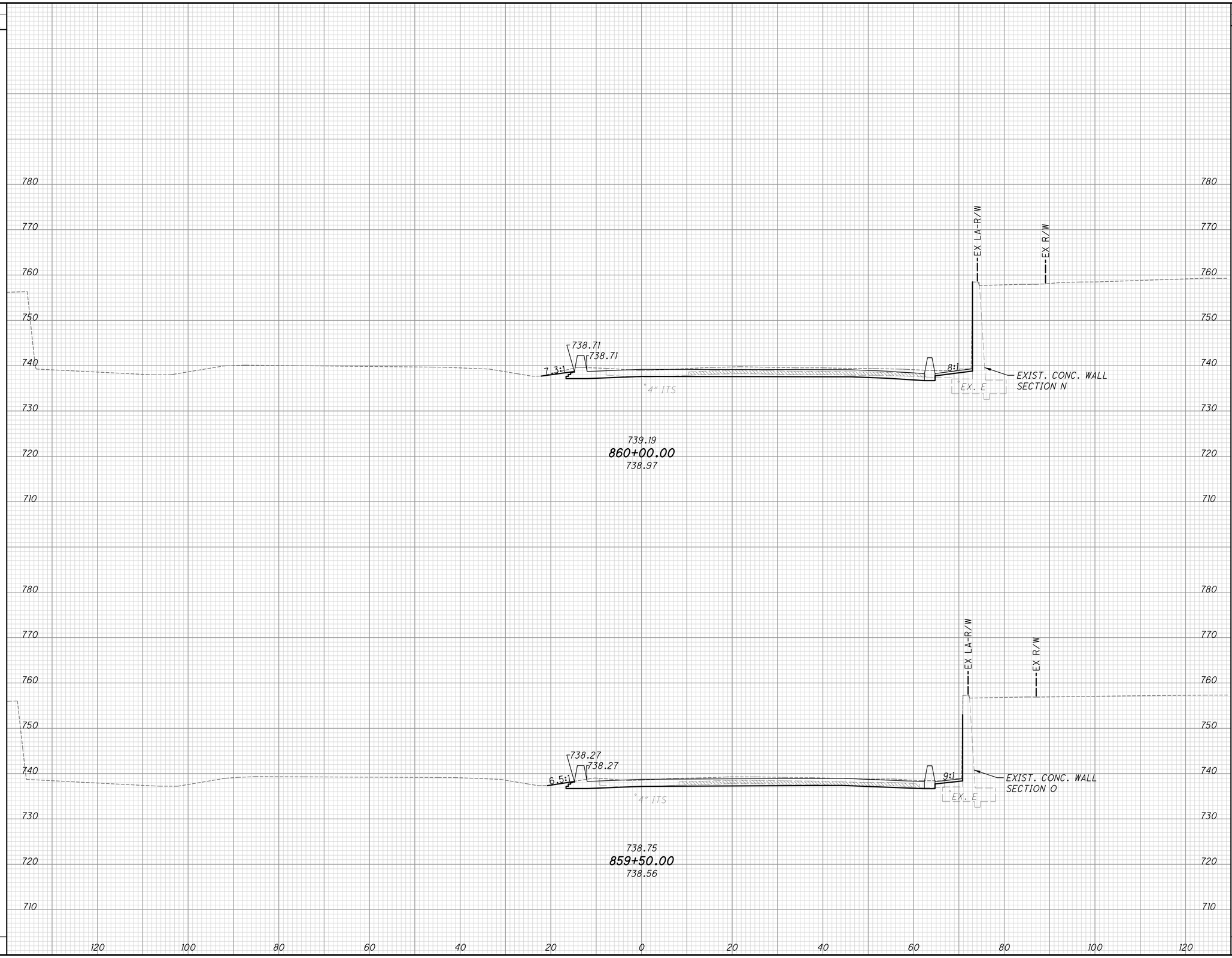

END AREA		VOLUME	
CUT	FILL	CUT	FILL
132	4		
109	3		
		224	7
		153	7
		377	14

CALCULATED MAH
CHECKED BSB

CROSS SECTIONS TRANS. I-70 EB (WEST SIDE)
STA. 859+50.00 TO STA. 860+00.00

FRA-70-14.54

755
2317

PLOT.CEL

ms consultants, inc.
msconsultants.com

www.msconsultants.com

Ohio DOT Workspace
70\71 East Interchange 2E

0 0.5" 1"

Batchplot Spec: \\msconsultants.com\files\production\03\60\06634_2E\standards\plotdrv\batchplt.spc
Pen Table: \\msconsultants.com\files\Standards\ustn\ohdot\V8i\ms\plotting\pen\V8i_ms_std.tbl PCF: ohdotV8i
Plot Driver: \\msconsultants.com\files\Standards\ustn\ohdot\V8i\ms\plotting\PDF.pltcfg PCF: 60-06634_2E_Columbus

34" x 22"

View: FENCE_VIEW1
By: jdouglas

Model: Sheet
Printed: 6/19/2018 @ 8:53:34 AM
File: N:\03\60\06634_2E\roadway\Sheets\05322XS1075.dgn

SEEDING	
END WIDTH	SQ. YDS.
10	
	51
9	
	45
	96

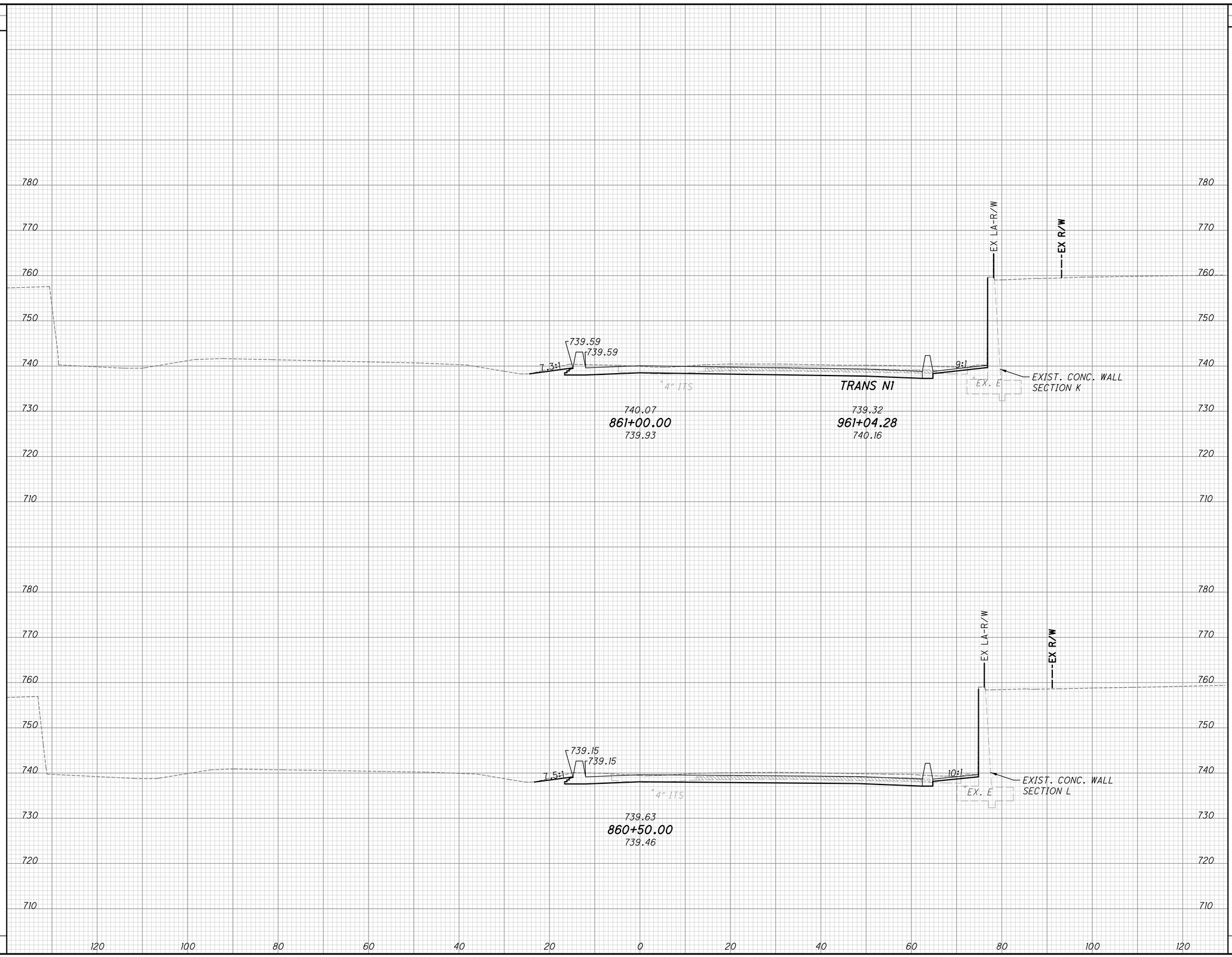

END AREA		VOLUME	
CUT	FILL	CUT	FILL
157	6		
149	5		
284	10		
261	9		
545	19		

CALCULATED MAH
CHECKED BSB

CROSS SECTIONS TRANS. I-70 EB (WEST SIDE)
STA. 860+50.00 TO STA. 861+00.00

FRA-70-14.54

756
2317

ms consultants, inc.

PLOT.CEL

ms consultants, inc.
msconsultants.com

Ohio DOT Workspace
70\71 East Interchange 2E
www.msconsultants.com

Batchplot Spec: \\msconsultants.com\files\production\03\60\06634_2E\standards\plotdrv\batchplt.spc
Pen Table: \\msconsultants.com\files\Standards\ustn\ohdot\V8i\ms\plotting\pen\V8i_ms_std.tbl
Plot Driver: \\msconsultants.com\files\Standards\ustn\ohdot\v8i\ms\plotting\PDF.pltcfg

34" x 22"

Model: Sheet
Printed: 6/19/2018 @ 8:53:35 AM
File: N:\03\60\06634_2E\roadway\sheets\105322XS1076.dgn
View: FENCE_VIEW1
By: jdouglas

SEEDING END WIDTH	SEEDING SQ. YDS.	END AREA CUT	END AREA FILL	VOLUME CUT	VOLUME FILL
12		179	4		
	63			324	6
11		170	3		
	57			303	8
	120			627	14

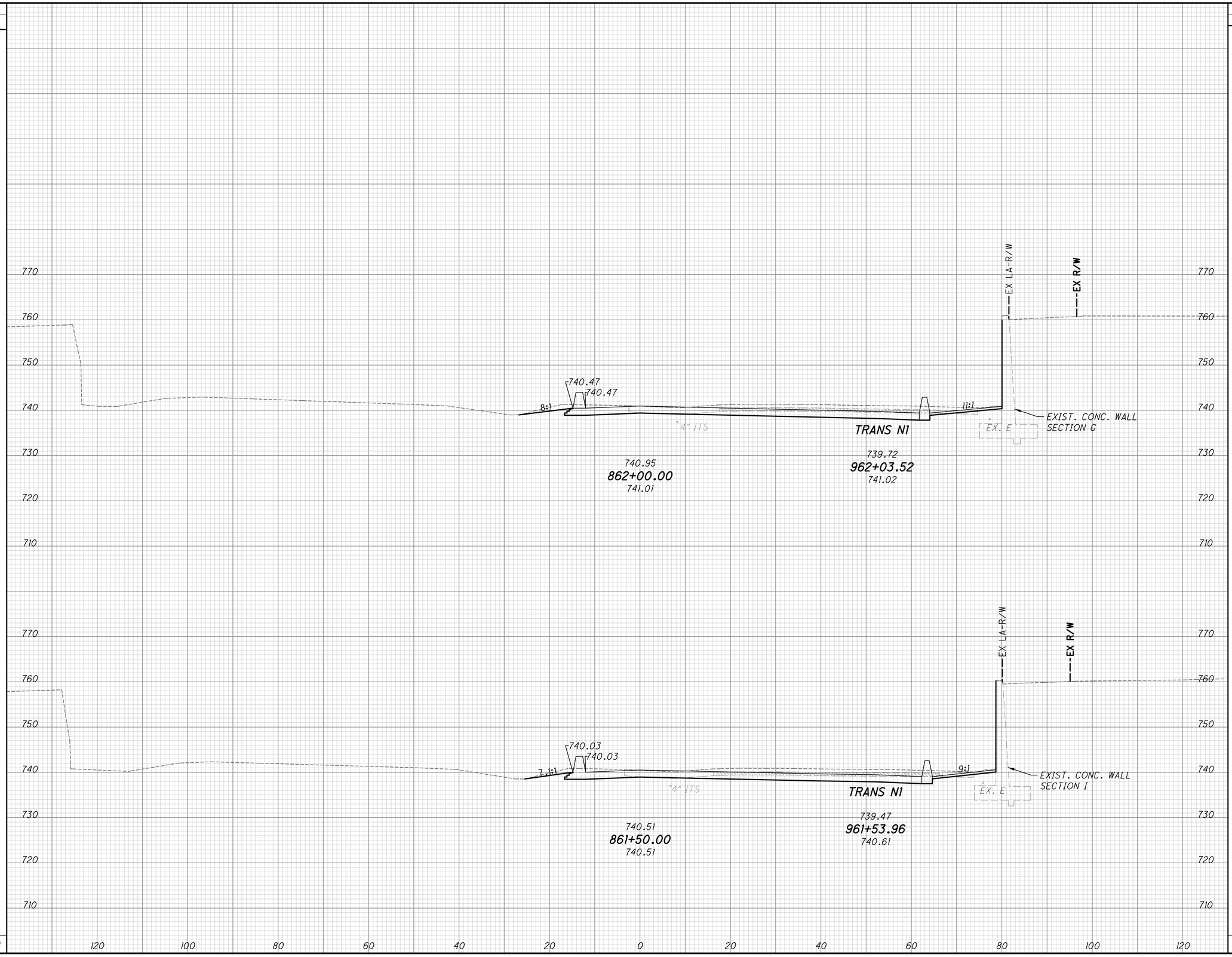

CALCULATED MAH
CHECKED BSB

CROSS SECTIONS TRANS. I-70 EB (WEST SIDE)
STA. 861+50.00 TO STA. 862+00.00

FRA-70-14.54

757
2317

ms consultants, inc.

PLOT.CEL

ms consultants, inc.
msconsultants.com

www.msconsultants.com

Ohio DOT Workspace
70\71 East Interchange 2E

0 0.5" 1"

Batchplot Spec: \\msconsultants.com\files\production\03\60\06634.2E\standards\plotdrv\batchplt.spc
Pen Table: \\msconsultants.com\files\Standards\usth\ohdot\V8i\ms\plotting\pen\V8i_ms_std.tbl PCF: ohdotV8i
Plot Driver: \\msconsultants.com\files\Standards\usth\ohdot\V8i\ms\plotting\PDF.pltcfg PCF: 60-06634_2E_Columbus

Model: Sheet @ 8:53:37 AM View: FENCE_VIEW1
Printed: 6/19/2018 By: jdouglas
File: N:\03\60\06634_2E\roadway\sheets\05322XS1077.dgn

34" x 22"

SEEDING	
END WIDTH	SQ. YDS.
16	
	80
13	
	70
	150

END AREA	
CUT	FILL
186	2
174	3

VOLUME	
CUT	FILL
333	4
327	6
660	10

CALCULATED MAH
CHECKED BSB

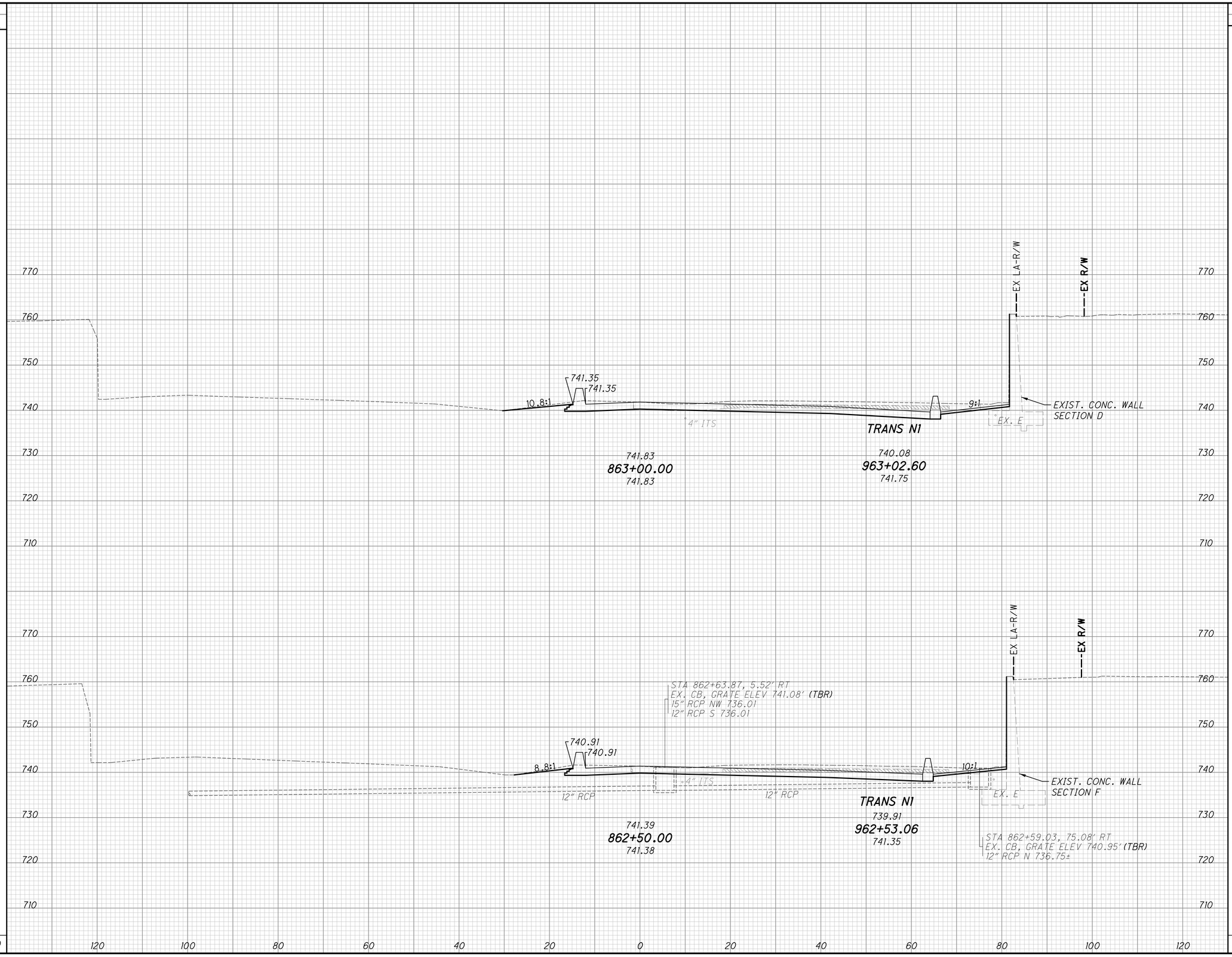

CROSS SECTIONS TRANS. I-70 EB (WEST SIDE)
STA. 862+50.00 TO STA. 863+00.00

FRA-70-14.54

758
2317

PLOT.CEL

ms consultants, inc.
msconsultants.com

Ohio DOT Workspace
70\71 East Interchange 2E
www.msconsultants.com

Batchplot Spec: \\msconsultants.com\files\production\03\60\06634_2E\standards\plotdrv\batchplt.spc
Pen Table: \\msconsultants.com\files\Standards\ustn\ohdot\V8i\ms\plotting\pen\V8i_ms_std.tbl
Plot Driver: \\msconsultants.com\files\Standards\ustn\ohdot\v8i\ms\plotting\PDF.pltcfg

34" x 22"

Model: Sheet
Printed: 6/19/2018 @ 8:53:38 AM
File: N:\03\60\06634_2E\roadway\sheets\105322XS1078.dgn
View: FENCE_VIEW1
By: jdouglas

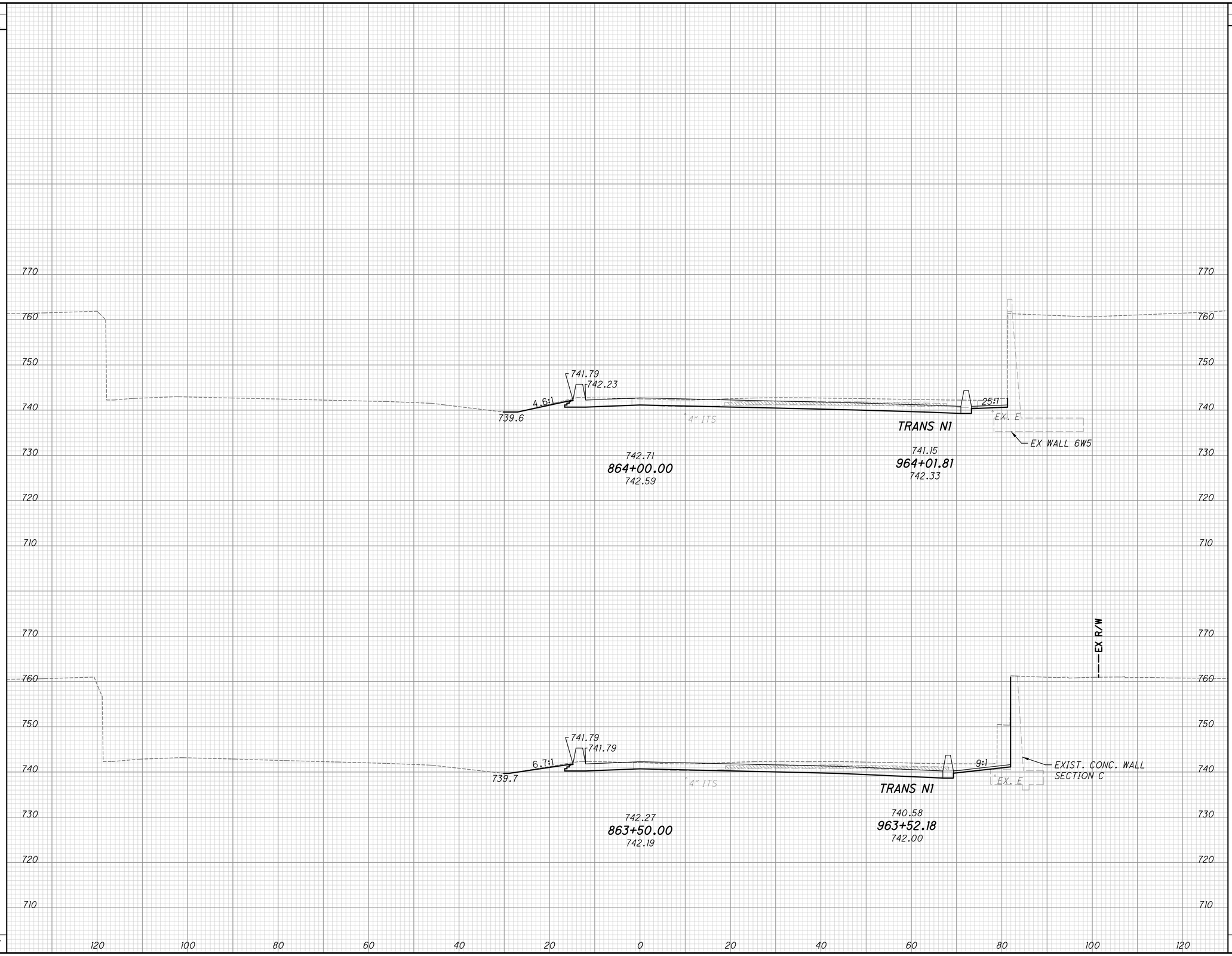

SEEDING END WIDTH	SEEDING SQ. YDS.	END AREA CUT	END AREA FILL	VOLUME CUT	VOLUME FILL
16		173	3		
	87			321	5
15		173	3		
	86			332	5
	173			653	10

CALCULATED MAH
CHECKED BSB

CROSS SECTIONS TRANS. I-70 EB (WEST SIDE)
STA. 863+50.00 TO STA. 864+00.00

FRA-70-14.54

759
2317

ms consultants, inc.

PLOT.CEL

ms consultants, inc.
msconsultants.com

www.msconsultants.com

Ohio DOT Workspace
70\71 East Interchange 2E

0 0.5" 1"

Batchplot Spec: \\msconsultants.com\files\production\03\60\06634_2E\standards\plotdrv\batchplt.SPC
Pen Table: \\msconsultants.com\files\Standards\ustn\ohdot\V8i\ms\plotting\pen\V8i_ms_std.tbl
Plot Driver: \\msconsultants.com\files\Standards\ustn\ohdot\V8i\ms\plotting\PDF: ohdotV8i
PDF: 60-06634_2E_Columbus

Model: Sheet
Printed: 6/19/2018 @ 8:53:39 AM
File: N:\03\60\06634_2E\roadway\sheets\05322XS1079.dgn
View: SHEET
By: jdouglas

34" x 22"

SEEDING	
END WIDTH	SQ. YDS.
15	85
15	86
	171

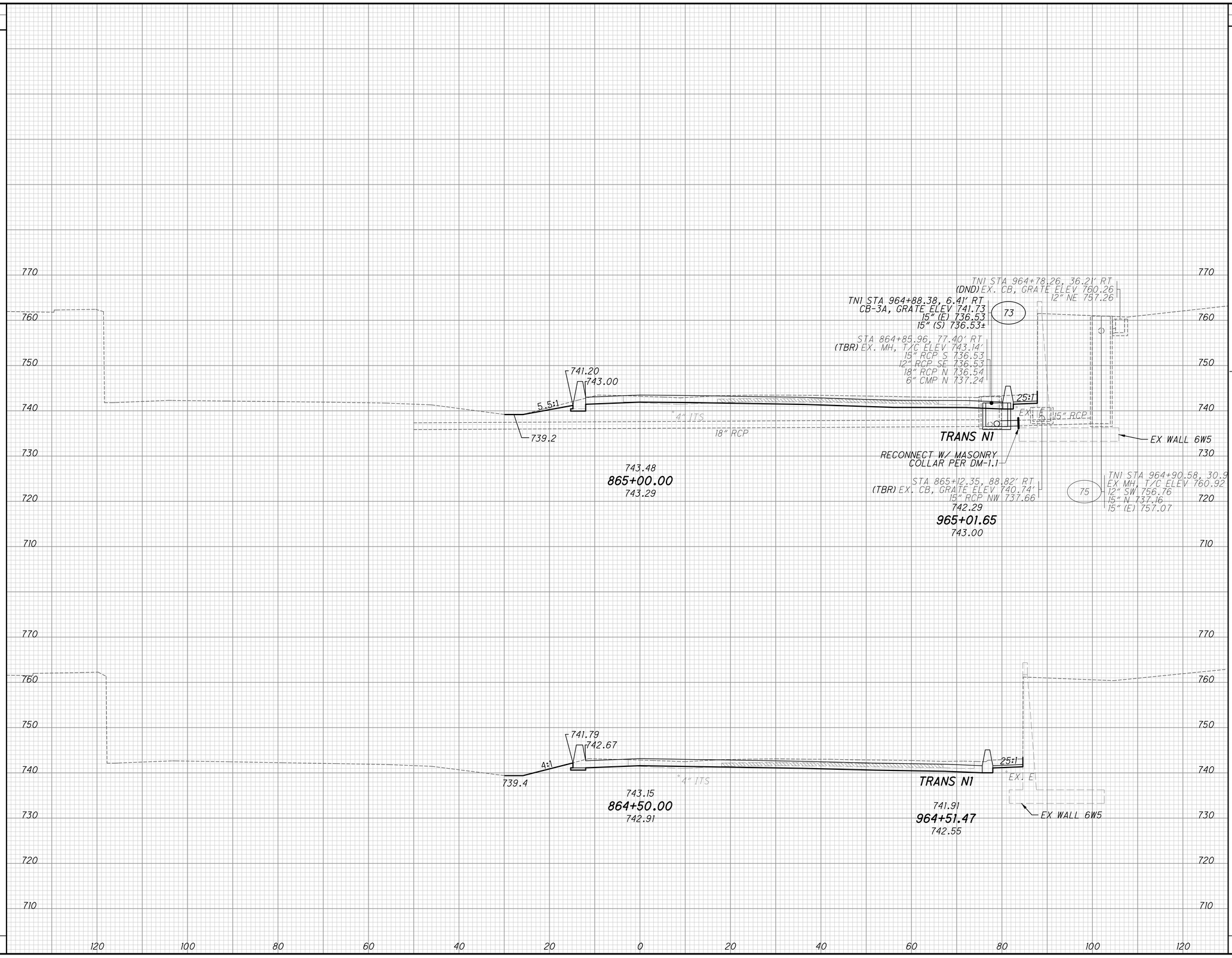

END AREA		VOLUME		
CUT	FILL	CUT	FILL	
106	0			AH
199	0			BK
176	5			
309	9			
157	5			
306	7			
615	16			

CALCULATED MAH
CHECKED BSB

CROSS SECTIONS TRANS. I-70 EB (WEST SIDE)
STA. 864+50.00 TO STA. 865+00.00

FRA-70-14.54

760
2317

ms consultants, inc.

PLOT.CEL

ms consultants, inc.
msconsultants.com

Ohio DOT Workspace
70\71 East Interchange 2E

www.msconsultants.com

0 1" 0.5"

Batchplot Spec: \\msconsultants.com\Files\production\03\60\06634_2E\standards\plotdrv\batchplt.SPC
Pen Table: \\msconsultants.com\Files\Standards\ustn\ohdot\V8\ms\plotting\pen\V8i_ms_std.tbl
Plot Driver: \\msconsultants.com\Files\Standards\ustn\ohdot\v8i\ms\plotting\PDF.pltcfg
PDF: ohdotV8i
DGN: 60-06634_2E_Columbus

34" x 22"

View: SHEET
By: jdouglas

Model: Sheet @ 8:53:40 AM
Printed: 6/19/2018
File: N:\03\60\06634_2E\roadway\sheets\1053223X1080.dgn

SEEDING END WIDTH	SEEDING SQ. YDS.	END AREA CUT	END AREA FILL	VOLUME CUT	VOLUME FILL
23		132	1		
	119			217	4
20		103	3		
	99			258	7
	218			475	11

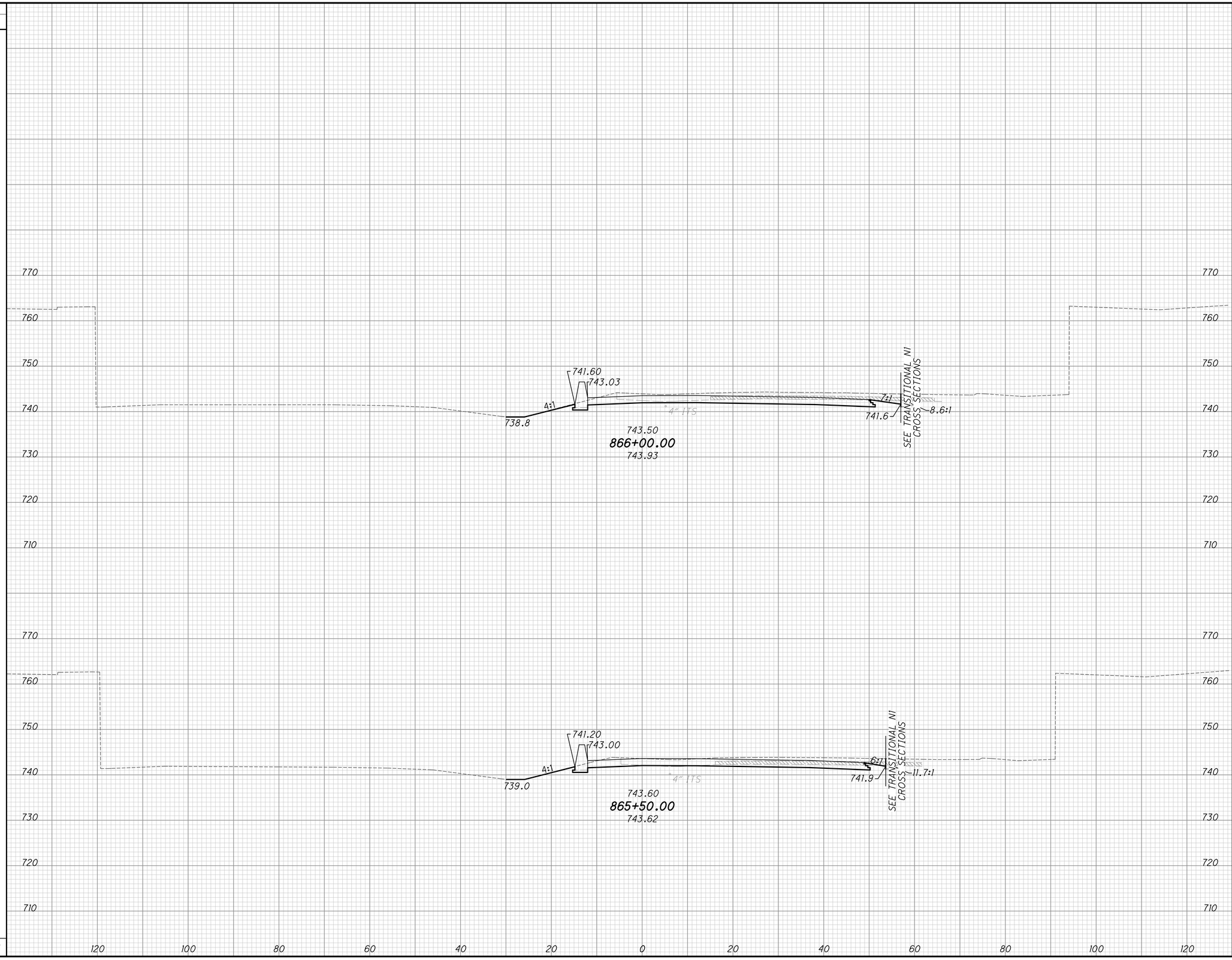

CALCULATED MAH
CHECKED BSB

CROSS SECTIONS TRANS. I-70 EB (WEST SIDE)
STA. 865+50.00 TO STA. 866+00.00

FRA-70-14.54

761
2317

ms consultants, inc.

PLOT.CEL

ms consultants, inc.
msconsultants.com

Ohio DOT Workspace
70\71 East Interchange 2E
www.msconsultants.com

Batchplot Spec: \\msconsultants.com\files\production\03\60\06634_2E\standards\plotdrv\batchplt.spc
Pen Table: \\msconsultants.com\files\Standards\ustn\ohdot\V8i\ms\plotting\pen\V8i_ms_std.tbl PCF: ohdotV8i
Plot Driver: \\msconsultants.com\files\Standards\ustn\ohdot\v8i\ms\plotting\PDF.pltcfg PCF: 60-06634_2E_Columbus

34" x 22"

Model: Sheet
Printed: 6/19/2018 @ 8:53:42 AM
File: N:\03\60\06634_2E\roadway\sheets\105322XS1081.dgn
View: SHEET
By: jdouglas

SEEDING END WIDTH	SEEDING SQ. YDS.
18	
	105
22	
	122
	227

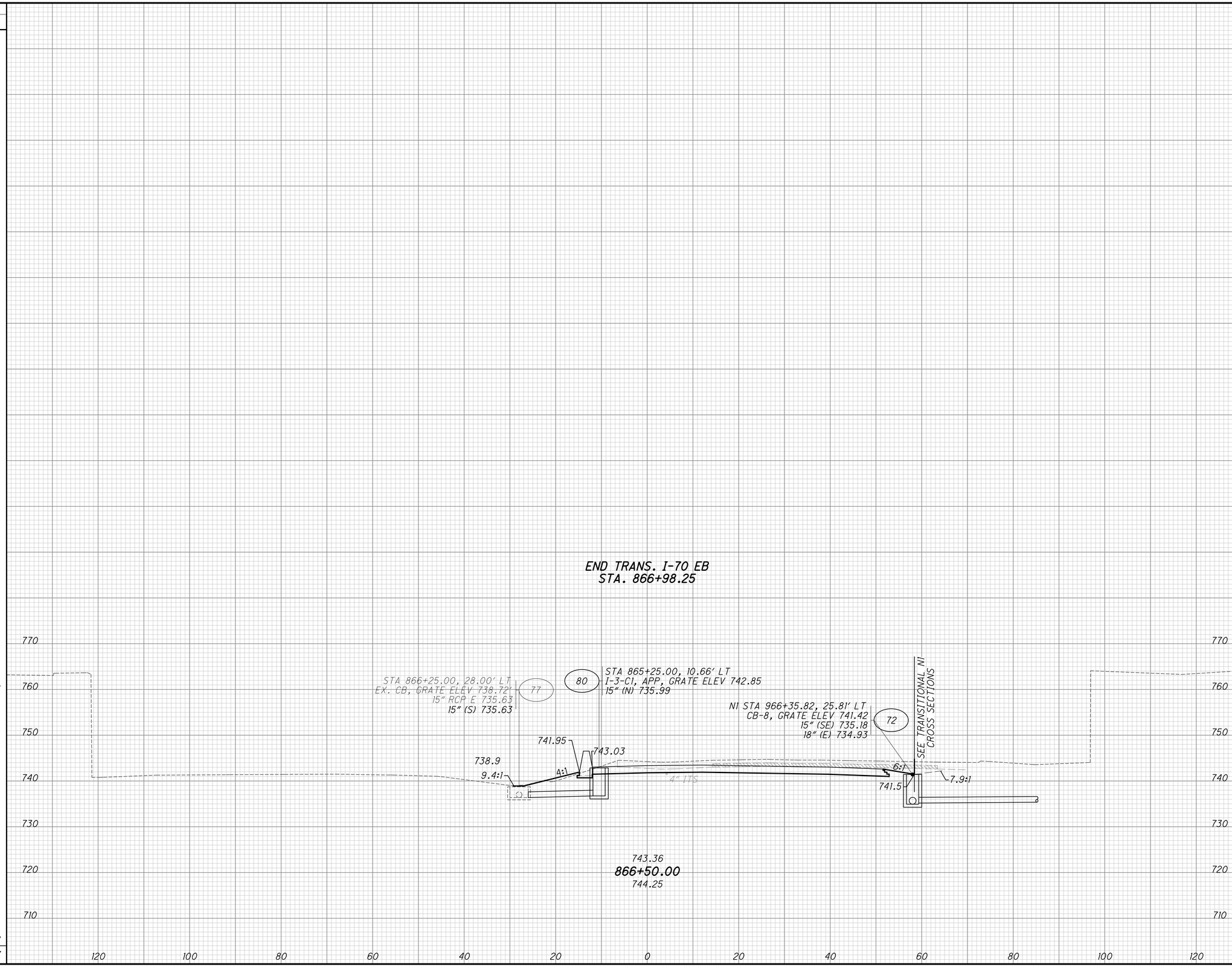

END AREA CUT	END AREA FILL	VOLUME CUT	VOLUME FILL
225	2		
		348	6
164	4		
		275	5
		623	11

CALCULATED MAH
CHECKED BSB

CROSS SECTIONS TRANS. I-70 EB (WEST SIDE)
STA. 866+50.00

FRA-70-14.54

762
2317

ms consultants, inc.

PLOT.CEL

ms consultants, inc.
msconsultants.com

Ohio DOT Workspace
70\71 East Interchange 2E
www.msconsultants.com

Batchplot Spec: \\msconsultants.com\files\production\03\60\06634_2E\standards\plotdrv\batchplt.spc
Pen Table: \\msconsultants.com\files\Standards\ustn\ohdot\V8i\ms\plotting\pen\V8i_ms_std.tbl
Plot Driver: \\msconsultants.com\files\Standards\ustn\ohdot\v8i\ms\plotting\PDF.pltcfg

34" x 22"

Model: Sheet
Printed: 6/19/2018 @ 8:53:43 AM
File: N:\03\60\06634_2E\roadway\sheets\105322XS1082.dgn
View: SHEET
By: jdouglas

SEEDING END WIDTH	SEEDING SQ. YDS.	END AREA CUT	END AREA FILL	VOLUME CUT	VOLUME FILL
0		175	0		
	0			1	0
0		174	0		
	0			0	0
	0			1	0

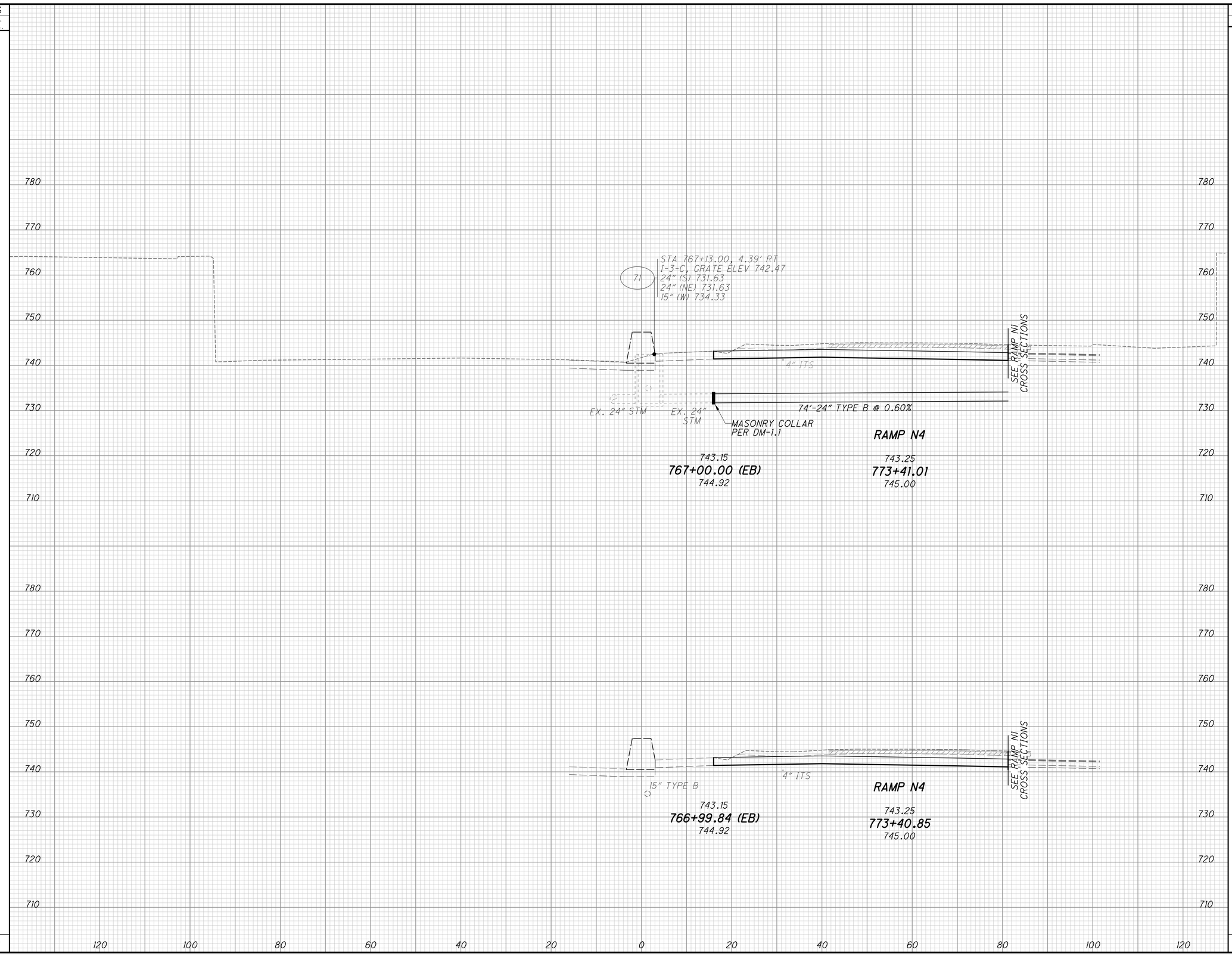

CALCULATED MAH
CHECKED BSB

CROSS SECTIONS IR-70
STA. 766+99.84 TO STA. 767+00.00

FRA-70-14.54

763
2317

ms consultants, inc.

PLOT.CEL

ms consultants, inc.
msconsultants.com

Ohio DOT Workspace
70\71 East Interchange 2E

www.msconsultants.com

0 1" 0.5"

Batchplot Spec: \\msconsultants.com\files\production\03\60\06634.2E\standards\plotdrv\batchplt.SPC
Pen Table: \\msconsultants.com\files\Standards\ustn\ohdot\V8\ms\plotting\pen\V8i_ms_std.tbl
Plot Driver: \\msconsultants.com\files\Standards\ustn\ohdot\v8i\ms\plotting\PDF.pltcfg

PDF: ohdotV8i
DGN: 60-06634_2E_Columbus

34" x 22"

Model: Sheet
Printed: 6/19/2018 @ 8:53:44 AM
File: N:\03\60\06634_2E\roadway\sheets\105322XS1083.dgn

View: SHEET
By: jdouglas

SEEDING	
END WIDTH	SQ. YDS.
0	
	0
0	
	0

780 770 760 750 740 730 720 710

EX FRA-70-14.56
PIER (BUILT 2G)

REMAINING EX. GRANT STREET BRIDGE PIER
& FOUNDATION, TO BE REMOVED

4" ITS

SEE RAMP N1
CROSS SECTIONS

743.51
768+00.00 (EB)
745.80

RAMP N4

743.57
774+41.24
745.86

STA 767+29.07, 35.95' RT
EX. CB, GRATE ELEV 744.69'(TBR)
15" RCP N 739.49
12" RCP S 739.49

4" ITS

12" RCP

SEE RAMP N1
CROSS SECTIONS

RAMP N4

743.33
773+91.04
745.36

743.25
767+50.00 (EB)
745.27

120 100 80 60 40 20 0 20 40 60 80 100 120

END AREA		VOLUME	
CUT	FILL	CUT	FILL
211	0		
		376	0
195	0		
		342	0
		718	0

CALCULATED MAH
CHECKED BSB

CROSS SECTIONS IR-70
STA. 767+50.00 TO STA. 768+00.00

FRA-70-14.54

764
2317

ms consultants, inc.

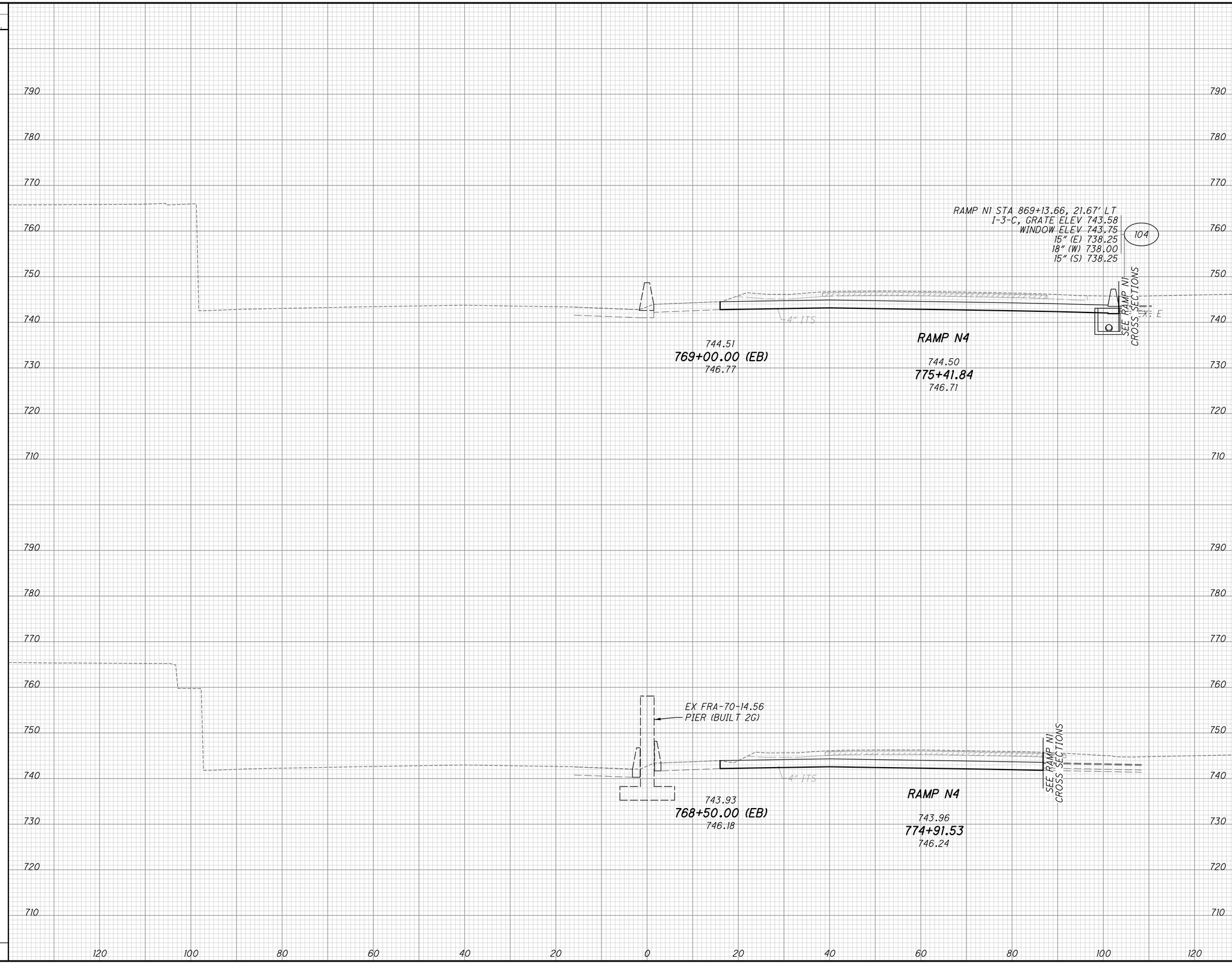

SEEDING END WIDTH	SEEDING SQ. YDS.	END AREA CUT	END AREA FILL	VOLUME CUT	VOLUME FILL
0		281	0		
	0			460	0
0		216	0		
	0			396	0
	0			856	0

CALCULATED MAH
CHECKED BSB

CROSS SECTIONS IR-70
STA. 768+50.00 TO STA. 769+00.00

FRA-70-14.54

765
2317

PLOT.CEL

ms consultants, inc.
msconsultants.com

Ohio DOT Workspace
70\71 East Interchange 2E
www.msconsultants.com

Batchplot Spec: \\msconsultants.com\files\production\03\60\06634_2E\standards\plotdrv\batchplt.spc
Pen Table: \\msconsultants.com\files\Standards\ustn\ohdot\V8i\ms\plotting\pen\V8i_ms_std.tbl
Plot Driver: \\msconsultants.com\files\Standards\ustn\ohdot\v8i\ms\plotting\PDF.pltcfg

34" x 22"

Model: Sheet
Printed: 6/19/2018 @ 8:53:46 AM
File: N:\03\60\06634_2E\roadway\sheets\105322XS1084.dgn
View: SHEET
By: jdouglas

ms consultants, inc.

PLOT.CEL

ms consultants, inc.
msconsultants.com

Batchplot Spec: \\msconsultants.com\files\production\03\60\06634.2E\standards\oladr\batchplt.SPC
Pen Table: \\msconsultants.com\files\Standards\usth\ohdot\V8i\ms\plotting\pen\V8i_ms_std.TBL
Plot Driver: \\msconsultants.com\files\Standards\usth\ohdot\v8i\ms\plotting\PDF.pltcfg

Model: Sheet @ 8:53:47 AM View: SHEET
Printed: 6/19/2018 By: jdouglas
File: N:\03\60\06634.2E\roadway\sheets\05322XS085.dgn

34" x 22"

1" 0.5" 0

Ohio DOT Workspace
70\71 East Interchange 2E

www.msconsultants.com

SEEDING	
END WIDTH	SQ. YDS.
0	0
0	0
0	0

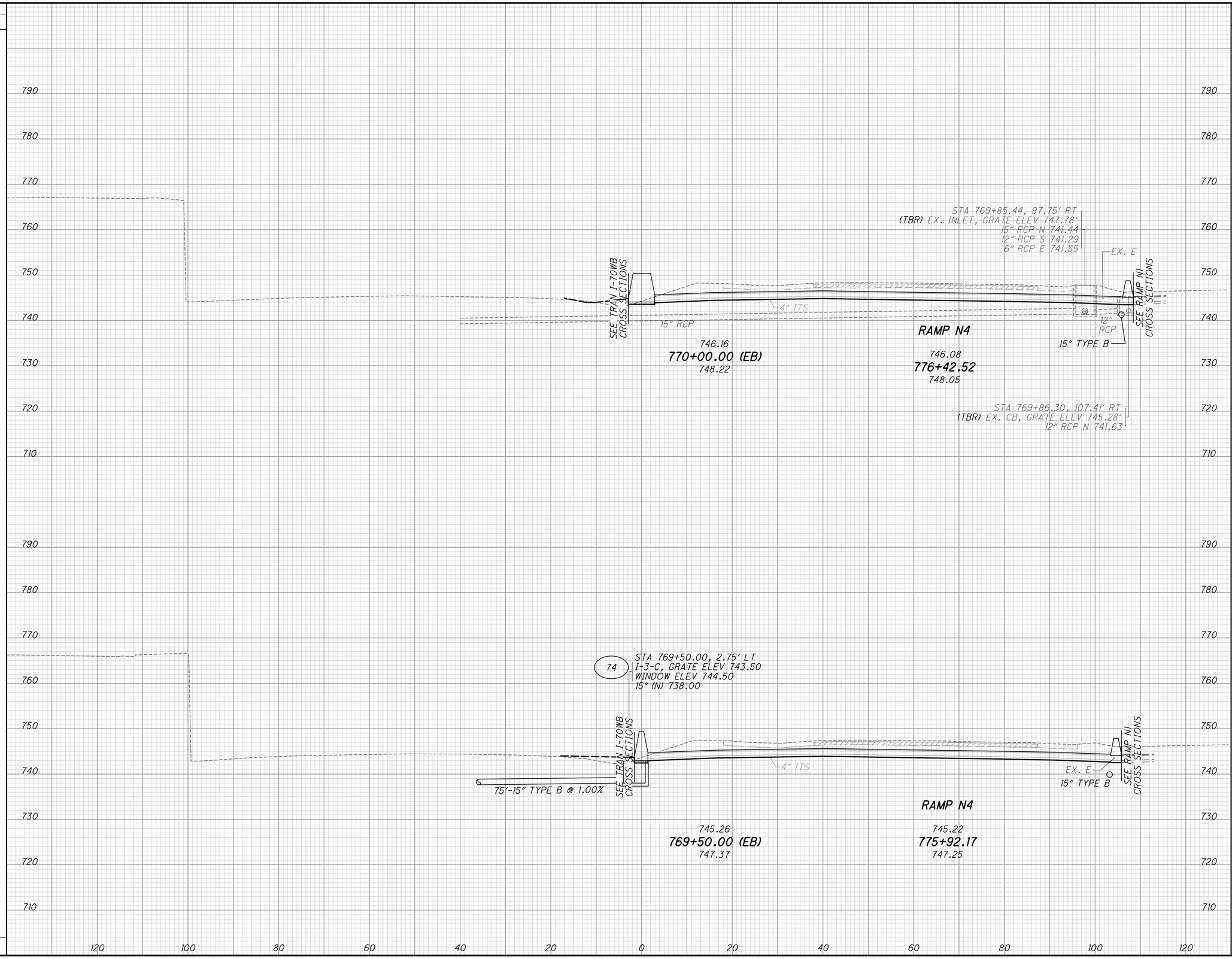

END AREA	
CUT	FILL
334	0
334	0

VOLUME	
CUT	FILL
618	0
569	0
1187	0

CALCULATED MAH
CHECKED BSB

CROSS SECTIONS IR-70
STA. 769+50.00 TO STA. 770+00.00

FRA-70-14.54

766
2317

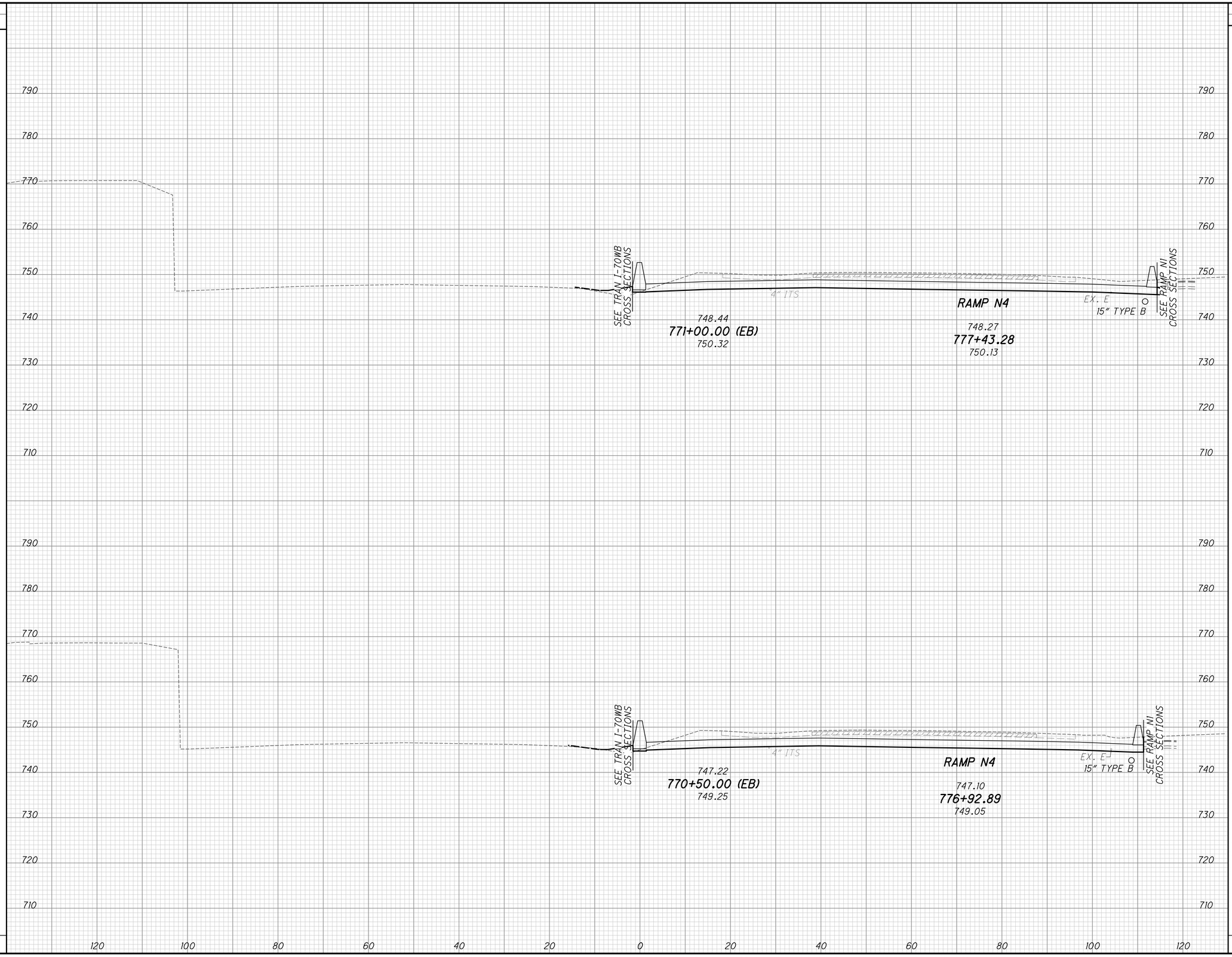

SEEDING END WIDTH	SEEDING SQ. YDS.	END AREA CUT	END AREA FILL	VOLUME CUT	VOLUME FILL
0		325	0		
	0			606	0
0		330	0		
	0			615	0
	0			1221	0

CALCULATED MAH
CHECKED BSB

CROSS SECTIONS IR-70
STA. 770+50.00 TO STA. 771+00.00

FRA-70-14.54

767
2317

PLOT.CEL
ms consultants, inc.
msconsultants.com
Ohio DOT Workspace
70\71 East Interchange 2E
www.msconsultants.com
Batchplot Spec: \\msconsultants.com\files\production\03\60\06634_2E\standards\plotdrv\batchplt.spc
Pen Table: \\msconsultants.com\files\Standards\ustn\ohdot\V8i\ms\plotting\pen\V8i_ms_std.tbl
Plot Driver: \\msconsultants.com\files\Standards\ustn\ohdot\v8i\ms\plotting\PDF.pltcfg
34" x 22"
View: SHEET
By: jdouglas
Model: Sheet
Printed: 6/19/2018 @ 8:53:49 AM
File: N:\03\60\06634_2E\roadway\sheets\105322XS1086.dgn
ms consultants, inc.

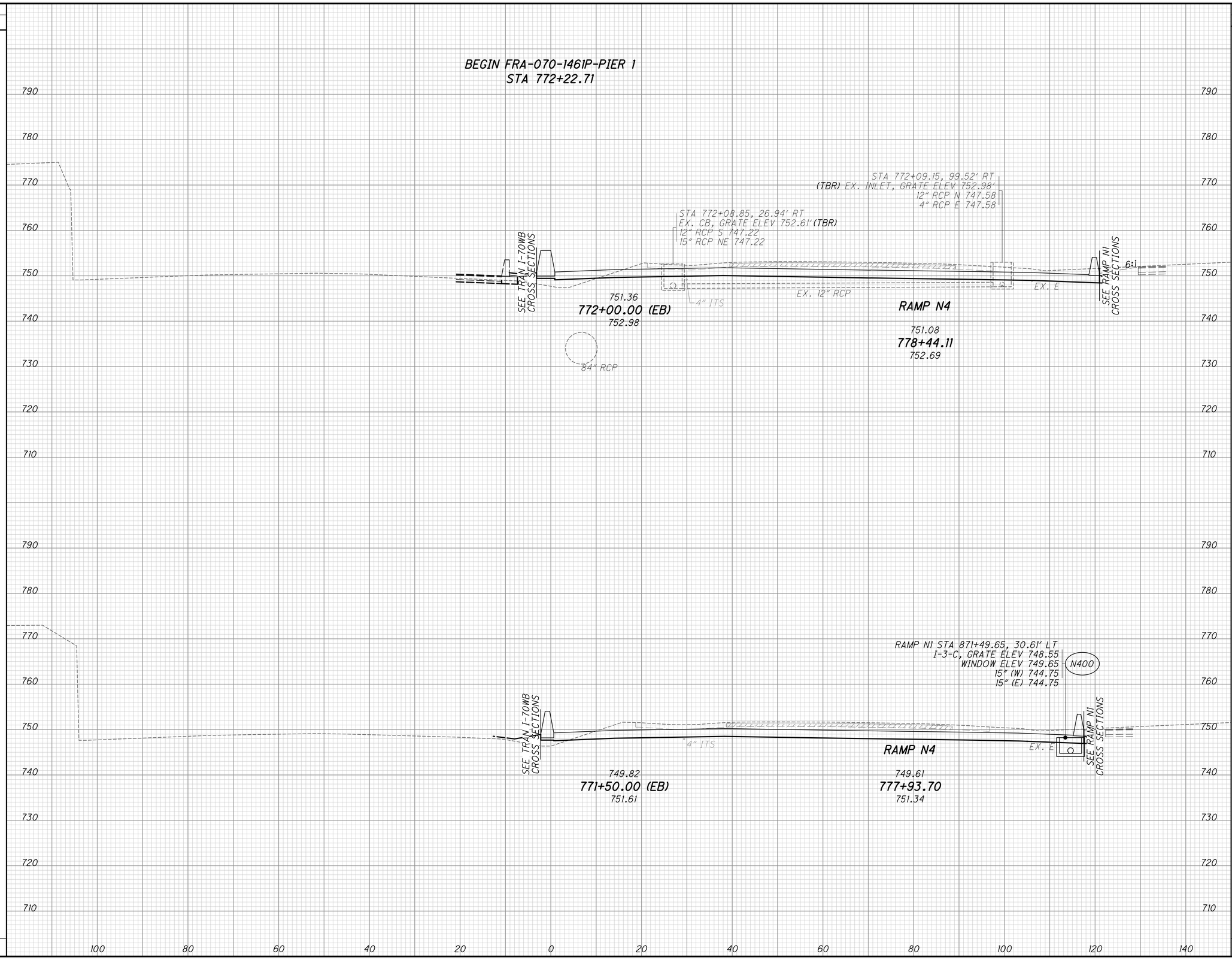

SEEDING END WIDTH	SEEDING SQ. YDS.	END AREA CUT	END AREA FILL	VOLUME CUT	VOLUME FILL
0		278	25	AH	
		282	17	BK	
	0			237	15
0		282	17		
	0			543	21
0		305	5		
	0			583	5
	0			1363	41

CALCULATED MAH
CHECKED BSB

CROSS SECTIONS IR-70
STA. 771+50.00 TO STA. 772+00.00

FRA-70-14.54

768
2317

ms consultants, inc.

PLOT.CEL
ms consultants, inc.
msconsultants.com
www.msconsultants.com
Ohio DOT Workspace
70\71 East Interchange 2E
Batchplot Spec: \\msconsultants.com\files\production\03\60\06634_2E\standards\plotdrv\batchplt.spc
Pen Table: \\msconsultants.com\files\Standards\ustn\ohdot\V8i\ms\plotting\pen\V8i_ms_std.tbl
Plot Driver: \\msconsultants.com\files\Standards\ustn\ohdot\v8i\ms\plotting\PDF.pltcfg
34" x 22"
View: SHEET
By: jdouglas
Model: Sheet
Printed: 6/19/2018 @ 8:53:50 AM
File: N:\03\60\06634_2E\roadway\sheets\105322XS1087.dgn

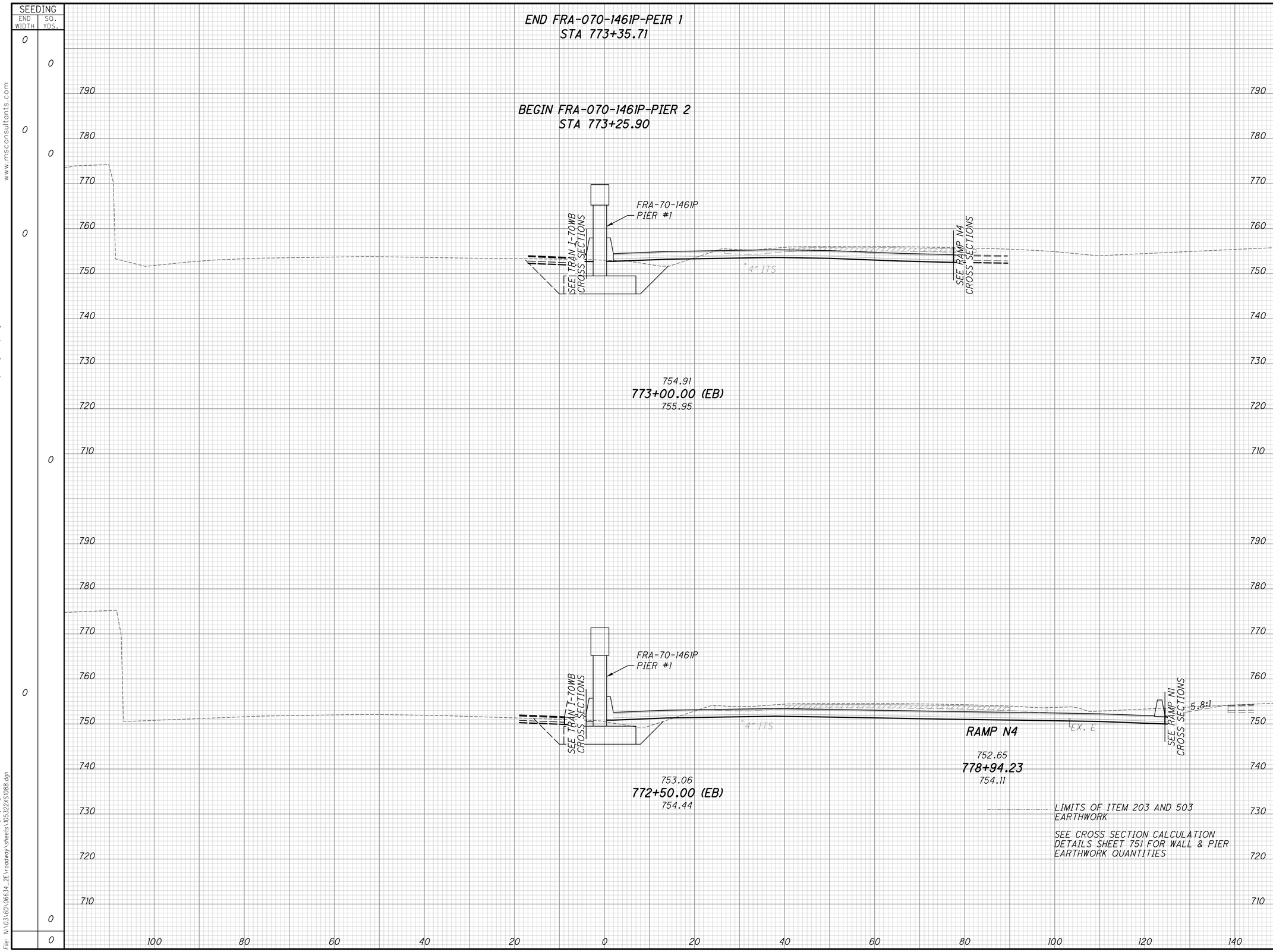

SEEDING END WIDTH	SEEDING SQ. YDS.	END AREA CUT	END AREA FILL	VOLUME CUT	VOLUME FILL
0					
	0	79	26	AH	
		110	68	BK	
0				40	25
	0	110	68	AH	
		137	33	BK	
0				131	32
		137	33		
				384	54
	0				
0		278	25		
	0			281	26
	0			836	137

CALCULATED MAH
CHECKED BSB

CROSS SECTIONS IR-70
STA. 772+50.00 TO STA. 773+33.71

FRA-70-14.54

769
2317

ms consultants, inc.

PLOT.CEL

ms consultants, inc.
msconsultants.com

Ohio DOT Workspace
70\71 East Interchange 2E
www.msconsultants.com

Batchplot Spec: \\msconsultants.com\files\production\03\60\06634_2E\standards\plotdrv\batchplt.spc
Pen Table: \\msconsultants.com\files\Standards\ustn\ohdot\V8i\ms\plotting\pen\V8i_ms_std.tbl
Plot Driver: \\msconsultants.com\files\Standards\ustn\ohdot\v8i\ms\plotting\PDF.pltcfg
PCF: ohdotV8i
PCF: 60-06634_2E_Columbus

34" x 22"

Model: Sheet
Printed: 6/19/2018 @ 8:53:51 AM
File: N:\03\60\06634_2E\roadway\sheets\105322XS1088.dgn
View: SHEET
By: jdouglas

PLOT.CEL

ms consultants, inc.
msconsultants.com

SEEDING	
END WIDTH	SQ. YDS.
0	
	0
0	
	0
0	
	0
0	
	0

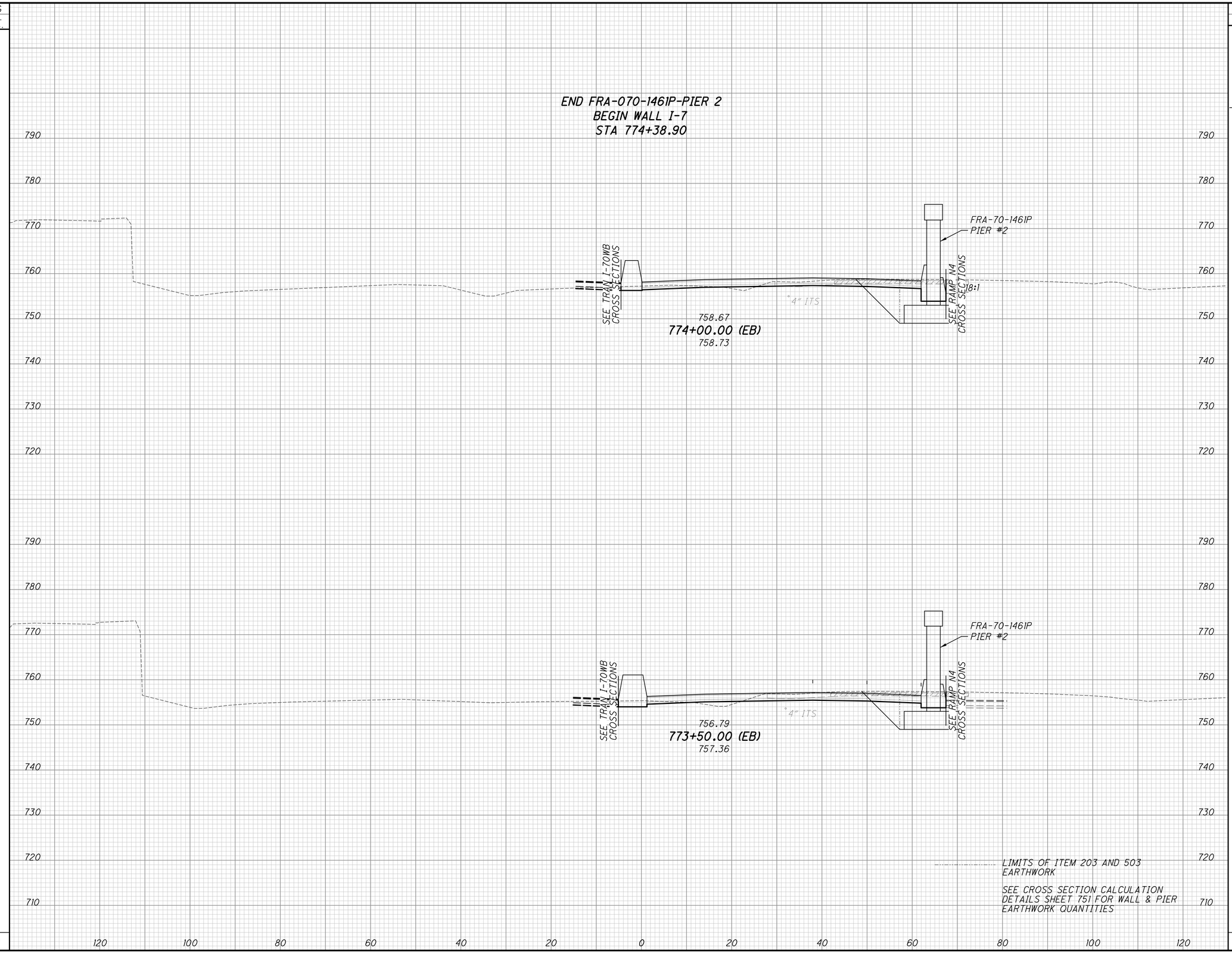

END AREA		VOLUME		
CUT	FILL	CUT	FILL	
54	44			AH
75	37			BK
		108	53	
75	37			
		142	57	
79	26			
		42	13	
		292	123	

CALCULATED MAH
CHECKED BSB

CROSS SECTIONS IR-70
STA. 773+50.00 TO STA. 774+00.00

FRA-70-14.54

770
2317

ms consultants, inc.

Batchplot Spec: \\msconsultants.com\files\production\03\60\06634_2E\standards\plotdrv\batchplt.SPC
Pen Table: \\msconsultants.com\files\Standards\usth\ohdot\V8i\ms\plotting\pen\V8i_ms_std.TBL
Plot Driver: \\msconsultants.com\files\Standards\usth\ohdot\v8i\ms\plotting\PDF.pltcfg

Model: Sheet
Printed: 6/19/2018 @ 8:53:52 AM
File: N:\03\60\06634_2E\roadway\sheets\1053223\1089.dgn
View: SHEET
By: jdouglas

34" x 22"

1" 0.5" 0

Ohio DOT Workspace
70\71 East Interchange 2E

www.msconsultants.com

PLOT.CEL

ms consultants, inc.
msconsultants.com

Batchplot Spec: \\msconsultants.com\files\production\03\60\06634.2E\standards\plotdrv\batchplt.SPC
Pen Table: \\msconsultants.com\files\Standards\ustn\ohdot\V8i\ms\plotting\pen\V8i_ms_std.tbl
Plot Driver: \\msconsultants.com\files\Standards\ustn\ohdot\v8i\ms\plotting\PDF.pltcfg

Ohio DOT Workspace
70\71 East Interchange 2E
www.msconsultants.com

DGN: ohdot\V8i
RCF: 60-06634_2E_Columbus

1" 0 0.5"

34" x 22"

Model: Sheet
Printed: 6/19/2018 @ 8:53:54 AM
File: N:\03\60\06634_2E\roadway\sheets\105322XS1090.dgn
View: SHEET
By: jdouglas

SEEDING	
END WIDTH	SQ. YDS.
0	0
0	0
0	0

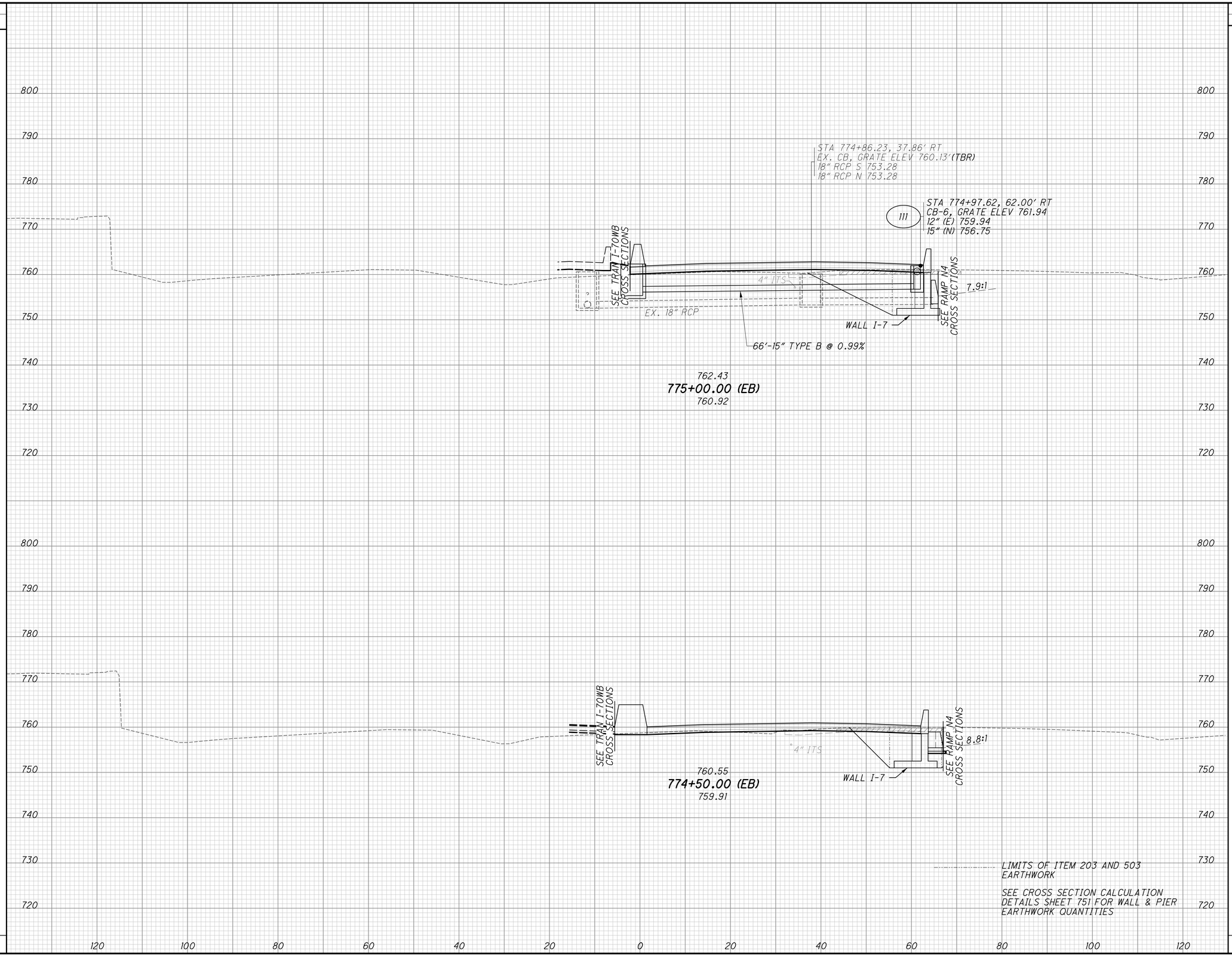

END AREA		VOLUME	
CUT	FILL	CUT	FILL
94	116		
		137	148
54	44		
		22	18
		159	166

CALCULATED MAH
CHECKED BSB

CROSS SECTIONS IR-70
STA. 774+50.00 TO STA. 775+00.00

FRA-70-14.54

771
2317

PLOT.CEL

ms consultants, inc.
msconsultants.com

www.msconsultants.com

Ohio DOT Workspace
70\71 East Interchange 2E

0 0.5" 1"

34" x 22"

Batchplot Spec: \\msconsultants.com\files\production\03\60\06634.2E\standards\plotdrv\batchplt.SPC
Pen Table: \\msconsultants.com\files\Standards\ustn\ohdot\V8\ms\plotting\pen\V8i_ms_std.tbl PDF: ohdotV8i
Plot Driver: \\msconsultants.com\files\Standards\ustn\ohdot\v8i\ms\plotting\PDF.pltcfg PDF: 60-06634_2E_Columbus

Model: Sheet View: SHEET
Printed: 6/19/2018 @ 8:53:55 AM By: jdouglas
File: N:\03\60\06634_2E\roadway\sheets\105322XS1091.dgn

SEEDING	
END WIDTH	SQ. YDS.
3	
	15
3	
	8
	23

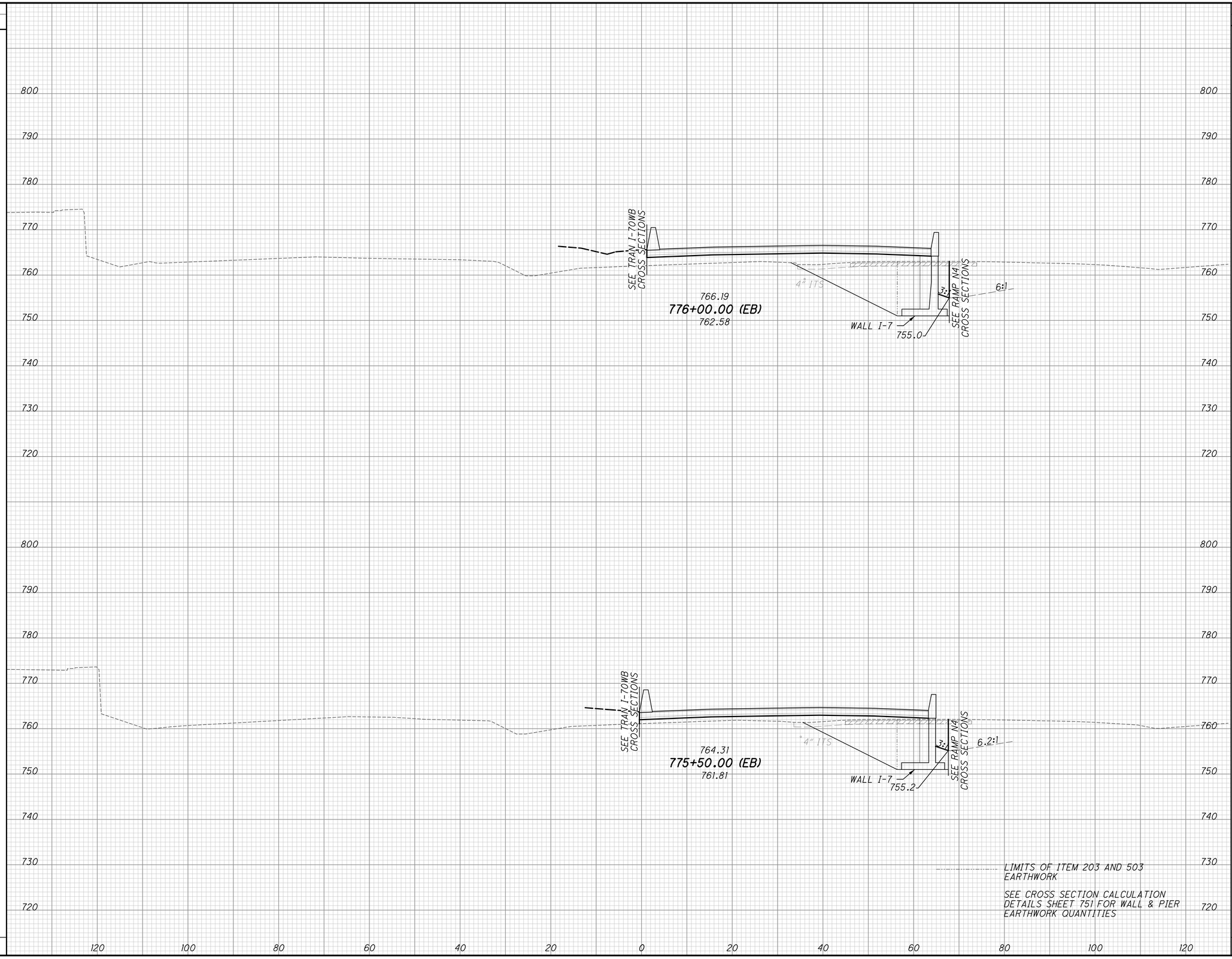

END AREA		VOLUME	
CUT	FILL	CUT	FILL
129	249		
		223	396
111	179		
		190	273
		413	669

CALCULATED MAH
CHECKED BSB

CROSS SECTIONS IR-70
STA. 775+50.00 TO STA. 776+00.00

FRA-70-14.54

772
2317

ms consultants, inc.

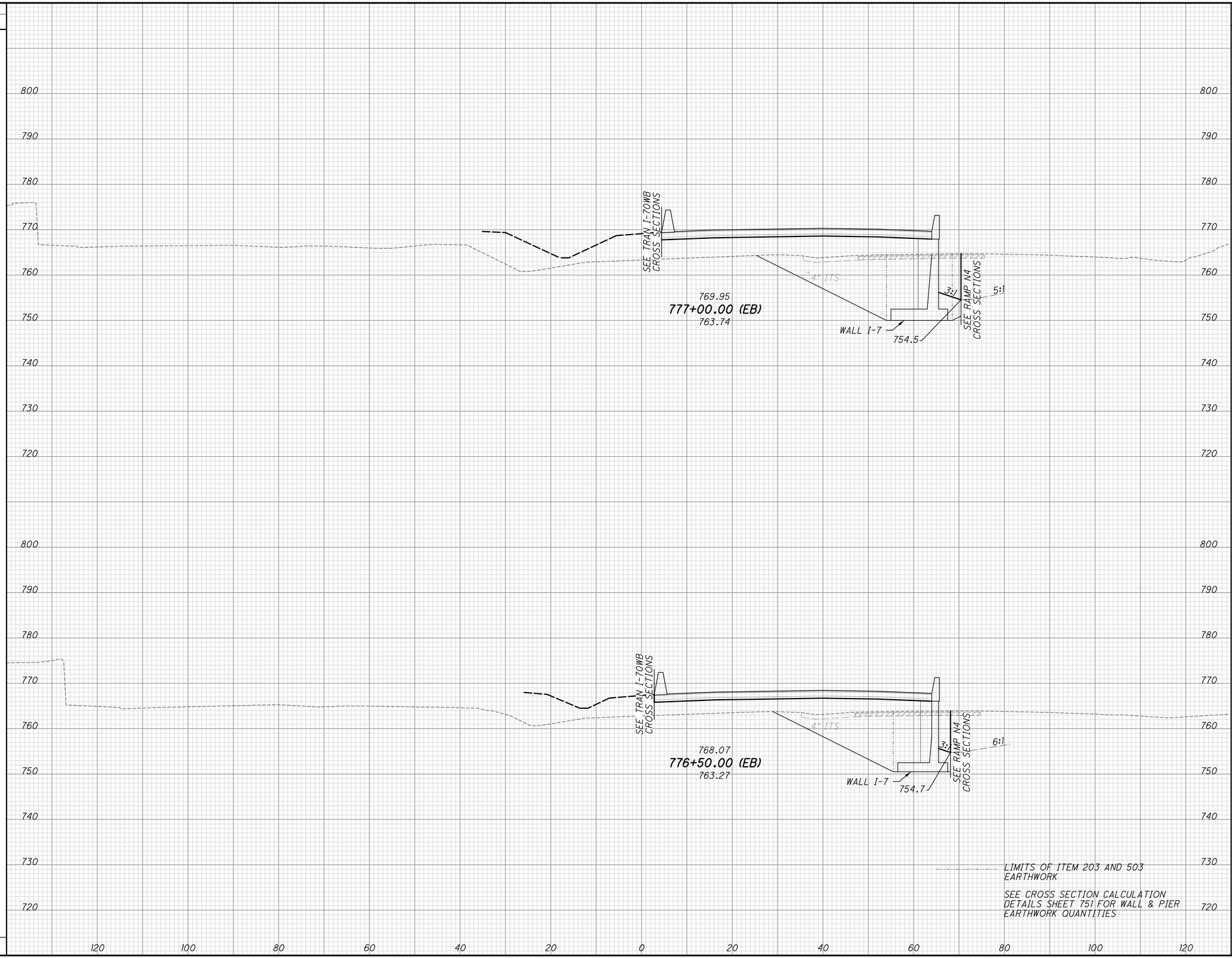

END AREA CUT	END AREA FILL	VOLUME CUT	VOLUME FILL
224	447		
		359	730
164	342		
		271	547
		630	1277

CALCULATED MAH
CHECKED BSB

CROSS SECTIONS IR-70
STA. 776+50.00 TO STA. 777+00.00

FRA-70-14.54

773
2317

ms consultants, inc.

PLOT.CEL

ms consultants, inc.
msconsultants.com

Ohio DOT Workspace
70\71 East Interchange 2E
www.msconsultants.com

Batchplot Spec: \\msconsultants.com\files\production\03\60\06634_2E\standards\plotdrv\batchplt.spc
Pen Table: \\msconsultants.com\files\Standards\ustn\ohdot\V8i\ms\plotting\pen\V8i_ms_std.tbl
Plot Driver: \\msconsultants.com\files\Standards\ustn\ohdot\v8i\ms\plotting\PDF.pltcfg

34" x 22"

Model: Sheet
Printed: 6/19/2018 @ 8:53:57 AM
File: N:\03\60\06634_2E\roadway\sheets\105322XS1092.dgn
View: SHEET
By: jdouglas

PLOT.CEL

ms consultants, inc.
msconsultants.com

Ohio DOT Workspace
70\71 East Interchange 2E
www.msconsultants.com

0 1" 0.5"

DGF: ohdot\V8i
DGF: 60-06634_2E_Columbus

Batchplot Spec: \\msconsultants.com\files\production\03\60\06634_2E\standards\ohdot\v8i\batchplt.sbc
Pen Table: \\msconsultants.com\files\Standards\ustn\ohdot\V8i\ms\plotting\pen\V8i_ms_std.tbl
Plot Driver: \\msconsultants.com\files\Standards\ustn\ohdot\v8i\ms\plotting\PDF.pltcfg

Model: Sheet
Printed: 6/19/2018 @ 8:53:58 AM
File: N:\03\60\06634_2E\roadway\sheets\1053223XS1093.dgn
View: SHEET
By: jdouglas

34" x 22"

SEEDING END WIDTH	SEEDING SQ. YDS.
	37
	118
	6
	31
	149

LIMITS OF ITEM 203 AND 503 EARTHWORK

SEE CROSS SECTION CALCULATION DETAILS SHEET 751 FOR WALL & PIER EARTHWORK QUANTITIES

203 RAMP N4 STA 784+49.92, 39.03' LT
CB-8, GRATE ELEV 753.37
15" (S) 749.98

12.5:1
2:1
12" VCP
4" ITS
773.71
778+00.00 (EB)
764.28
4:1
4:1
753.4
WALL I-7
SEE RAMP N4 CROSS SECTIONS
255'-60" TYPE B @ 1.44%

SEE TRAN I-70WB CROSS SECTIONS
4" ITS
771.83
777+50.00 (EB)
763.99
3:1
4.9:1
754.0
WALL I-7
SEE RAMP N4 CROSS SECTIONS

800 790 780 770 760 750 740 730 720

120 100 80 60 40 20 0 20 40 60 80 100 120

END AREA CUT	END AREA FILL	VOLUME CUT	VOLUME FILL
244	799		
		444	1242
235	542		
		425	916
		869	2158

CALCULATED MAH
CHECKED BSB

CROSS SECTIONS IR-70
STA. 777+50.00 TO STA. 778+00.00

FRA-70-14.54

774
2317

ms consultants, inc.

PLOT.CEL

ms consultants, inc.
msconsultants.com

Ohio DOT Workspace
70\71 East Interchange 2E
www.msconsultants.com

1" 0.5" 0

Batchplot Spec: \\msconsultants.com\files\production\03\60\06634.2E\standards\plotdrv\batchplt.SPC
Pen Table: \\msconsultants.com\files\Standards\usth\ohdot\V8i\ms\plotting\pen\V8i_ms_std.tbl
Plot Driver: \\msconsultants.com\files\Standards\usth\ohdot\v8i\ms\plotting\PDF.pltcfg
PDF: ohdotV8i
PCF: 60-06634_2E_Columbus

34" x 22"

Model: Sheet
Printed: 6/19/2018 @ 8:54:00 AM
File: N:\03\60\06634.2E\roadway\sheets\05322XS1094.dgn
View: SHEET
By: jdouglas

SEEDING	
END WIDTH	SQ. YDS.
51	252
40	213
	465

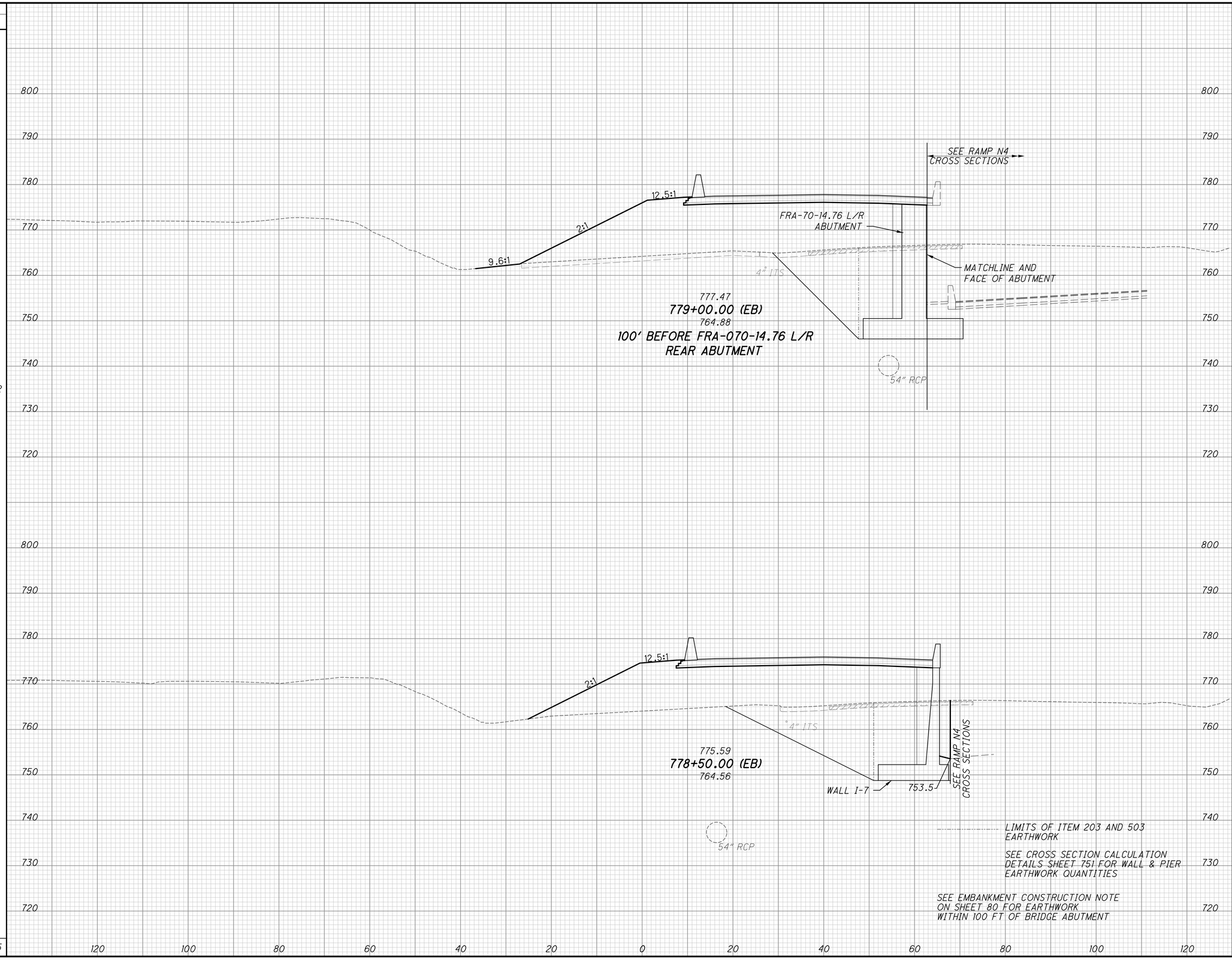

END AREA		VOLUME	
CUT	FILL	CUT	FILL
237	0		
		466	0
266	947		
		473	1617
		939	1617

CALCULATED	CHECKED
MAH	BSB

CROSS SECTIONS IR-70
STA. 778+50.00 TO STA. 779+00.00

FRA-70-14.54

775
2317

ms consultants, inc.

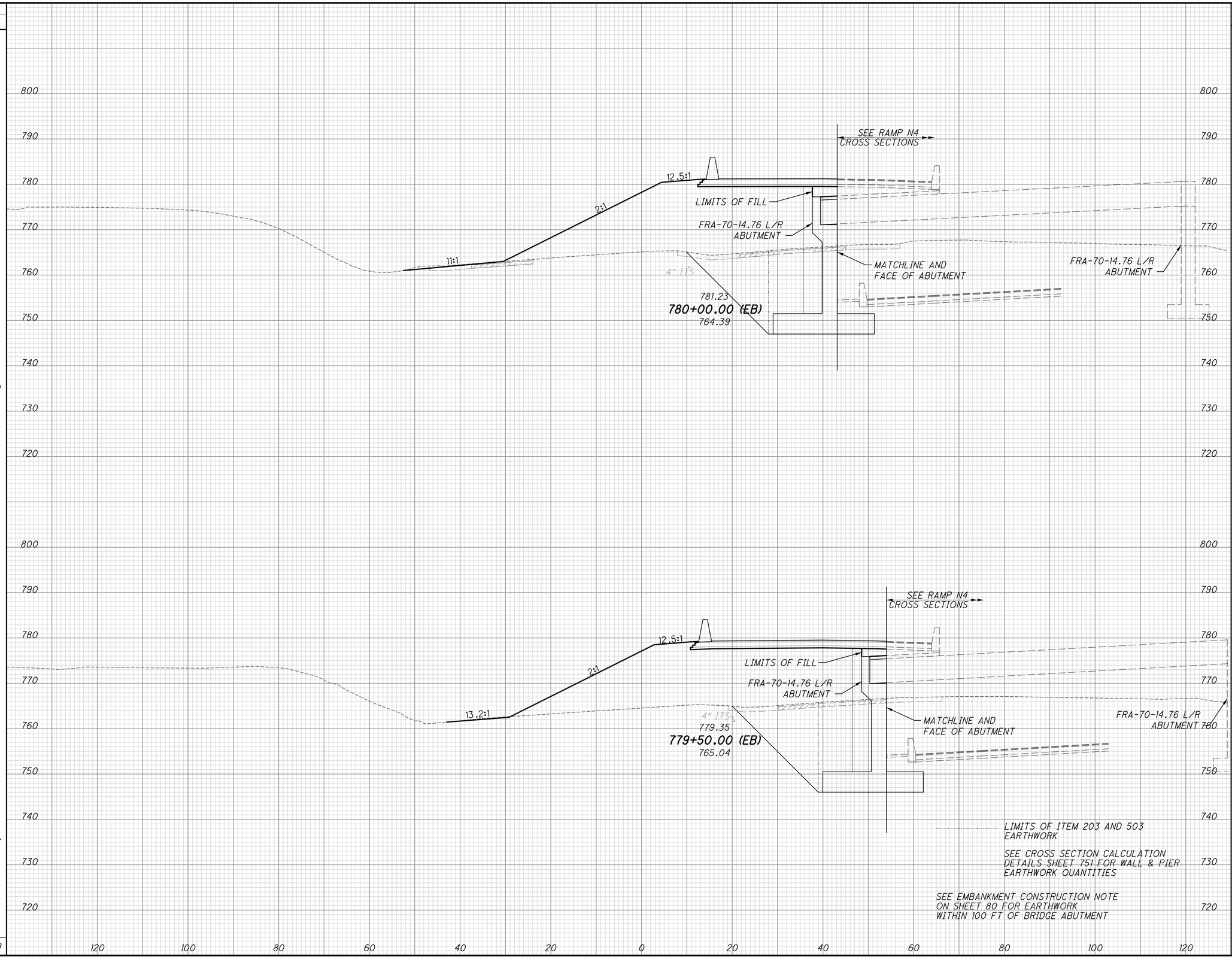

SEEDING END WIDTH	SEEDING SQ. YDS.	END AREA CUT	END AREA FILL	VOLUME CUT	VOLUME FILL
71		171	0		
	362			324	0
59		179	0		
	307			385	0
	669			709	0

CALCULATED MAH
CHECKED BSB

CROSS SECTIONS IR-70
STA. 779+50.00 TO STA. 780+00.00

FRA-70-14.54

776
2317

ms consultants, inc.

PLOT.CEL

ms consultants, inc.
msconsultants.com

www.msconsultants.com

Ohio DOT Workspace
70\71 East Interchange 2E

Batchplot Spec: \\msconsultants.com\files\production\03\60\06634_2E\standards\plotdrv\batchplt.spc
Pen Table: \\msconsultants.com\files\Standards\ustn\ohdot\V8i\ms\plotting\pen\V8i_ms_std.tbl
Plot Driver: \\msconsultants.com\files\Standards\ustn\ohdot\v8i\ms\plotting\PDF.pltcfg

PCF: ohdotV8i
PCF: 60-06634_2E_Columbus

34" x 22"

Model: Sheet
Printed: 6/19/2018 @ 8:54:01 AM
File: N:\03\60\06634_2E\roadway\sheets\105322XS1095.dgn
View: SHEET
By: jdouglas

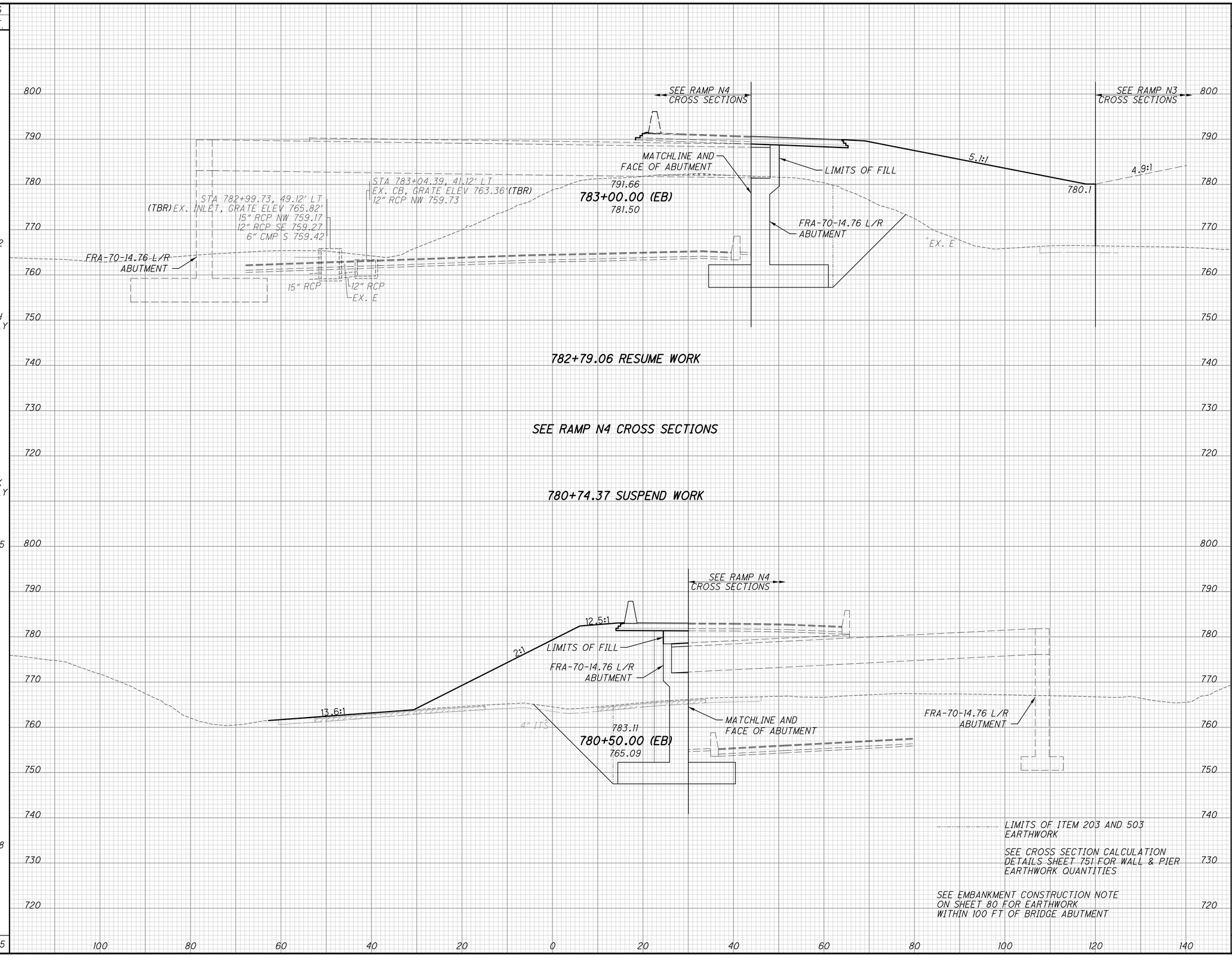

END AREA CUT	END AREA FILL	VOLUME CUT	VOLUME FILL
200	0		
		155	0
200	0	AH ONLY	
170	0	BK ONLY	
		154	0
170	0		
		315	0
		624	0

CALCULATED MAH
CHECKED BSB

CROSS SECTIONS IR-70
STA. 780+50.00 TO STA. 783+00.00

FRA-70-14.54

ms consultants, inc.

PLOT.CEL

ms consultants, inc.
msconsultants.com

SEEDING	
END WIDTH	SQ. YDS.
36	
	233
48	
	291
	524

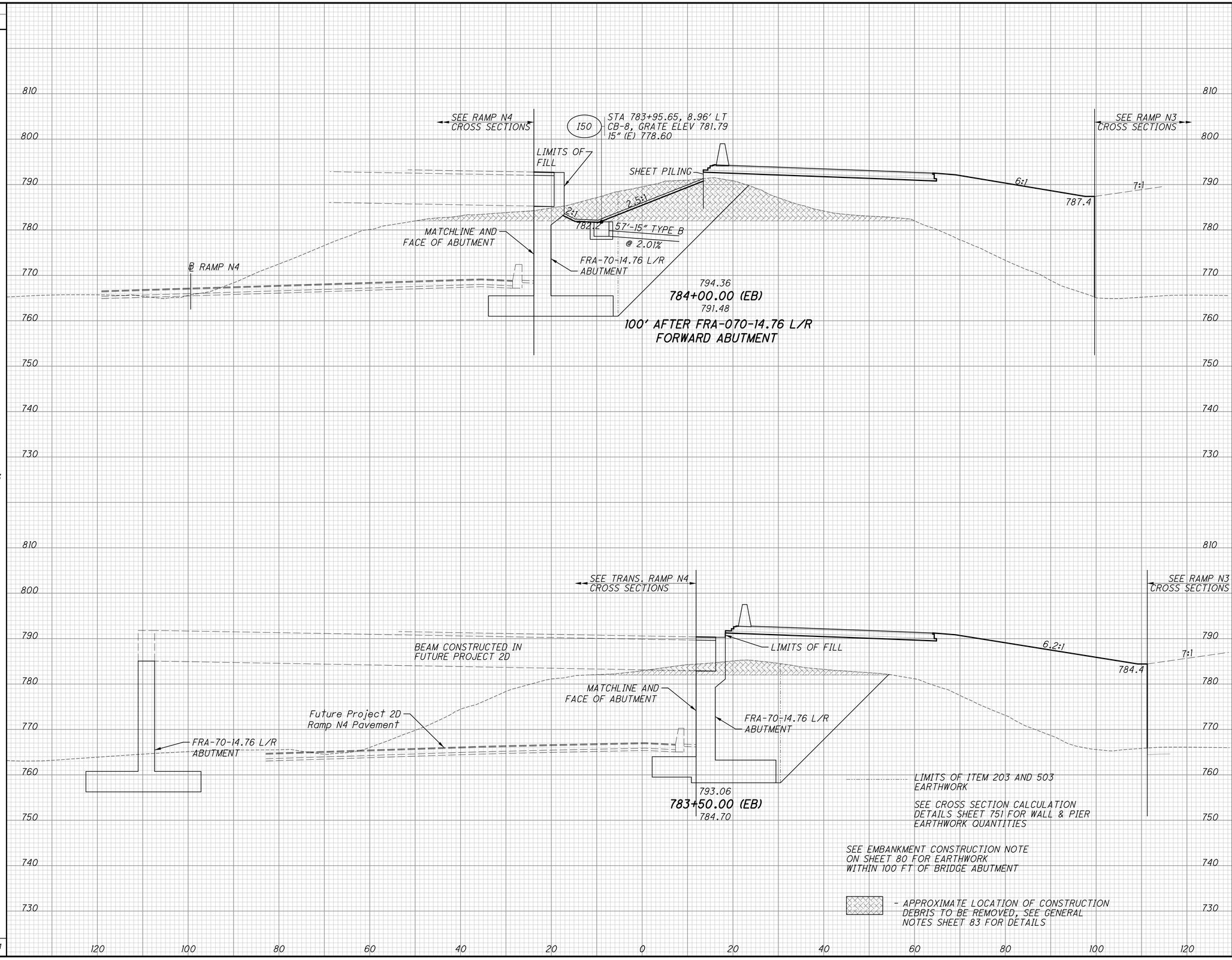

END AREA		VOLUME	
CUT	FILL	CUT	FILL
221	448		
		467	415
282	0		
		446	0
		913	415

CALCULATED MAH
CHECKED BSB

CROSS SECTIONS IR-70
STA. 783+50.00 TO STA. 784+00.00

FRA-70-14.54

778
2317

ms consultants, inc.

Batchplot Spec: \\msconsultants.com\files\production\03\60\06634.2E\standards\plotdrv\batchplt.SPC
Pen Table: \\msconsultants.com\files\Standards\usth\ohdot\V8i\ms\plotting\pen\V8i_ms_std.tbl
Plot Driver: \\msconsultants.com\files\Standards\usth\ohdot\v8i\ms\plotting\PDF.pltcfg

Model: Sheet
Printed: 6/19/2018 @ 8:54:04 AM
File: N:\03\60\06634.2E\roadway sheets\05322XS1099.dgn

View: SHEET
By: jdouglas

34" x 22"

0 0.5" 1"

PDF: ohdotV8i
PDF: 60-06634_2E_Columbus

Ohio DOT Workspace
70\71 East Interchange 2E

www.msconsultants.com

PLOT.CEL

ms consultants, inc.
msconsultants.com

www.msconsultants.com

Ohio DOT Workspace
70\71 East Interchange 2E

1" 0 0.5"

34" x 22"

Batchplot Spec: \\msconsultants.com\files\production\03\60\06634.2E\standards\plotdrv\batchplt.spc
Pen Table: \\msconsultants.com\files\Standards\usth\ohdot\V8i\ms\plotting\pen\V8i_ms_std.tbl
Plot Driver: \\msconsultants.com\files\Standards\usth\ohdot\v8i\ms\plotting\PDF.pltcfg

Model: Sheet
Printed: 6/19/2018 @ 8:54:05 AM
File: N:\03\60\06634.2E\roadway\sheets\105322XS1100.dgn
View: SHEET
By: jdouglas

SEEDING	
END WIDTH	SQ. YDS.
15	
	64
15	
	114
26	
	172
	350

- APPROXIMATE LOCATION OF CONSTRUCTION NOTES SHEET 83 FOR DETAILS
DEBRIS TO BE REMOVED, SEE GENERAL

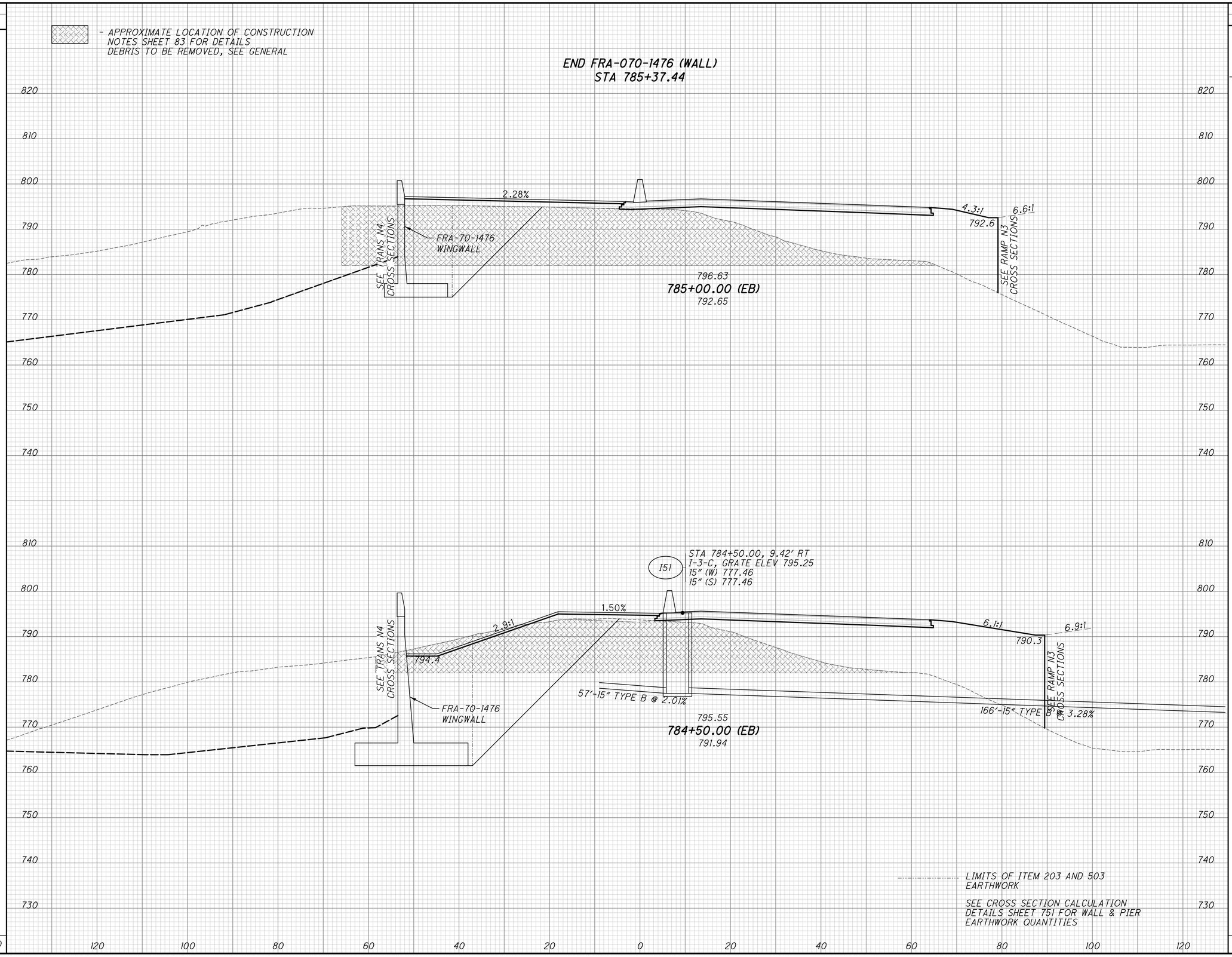

LIMITS OF ITEM 203 AND 503 EARTHWORK

SEE CROSS SECTION CALCULATION DETAILS SHEET 751 FOR WALL & PIER EARTHWORK QUANTITIES

END AREA		VOLUME	
CUT	FILL	CUT	FILL
359	2245	AH	
25	1752	BK	
		34	2429
25	1752		
		217	3298
210	1810		
		400	3004
		651	8731

CALCULATED MAH
CHECKED BSB

CROSS SECTIONS IR-70
STA. 784+50.00 TO STA. 785+00.00

FRA-70-14.54

779
2317

ms consultants, inc.

PLOT.CEL

ms consultants, inc.
msconsultants.com

www.msconsultants.com

Ohio DOT Workspace
70\71 East Interchange 2E

0 0.5" 1"

34" x 22"

Batchplot Spec: \\msconsultants.com\files\production\03\60\06634.2E\standards\olotdr\batchplt.SPC
Pen Table: \\msconsultants.com\files\Standards\usth\ohdot\V8i\ms\plotting\pen\V8i_ms_std.tbl PDF: ohdotV8i
Plot Driver: \\msconsultants.com\files\Standards\usth\ohdot\V8i\ms\plotting\PDF.pltcfg PDF: 60-06634_2E_Columbus

Model: Sheet
Printed: 6/19/2018 @ 8:54:06 AM View: SHEET
File: N:\03\60\06634.2E\roadway\sheets\105322XS101.dgn By: jdouglas

SEEDING	
END WIDTH	SQ. YDS.
143	
	696
143	
	808
148	
	114
	1618

100' BEFORE FRA-070-1493 REAR ABUTMENT
STA 786+43.90

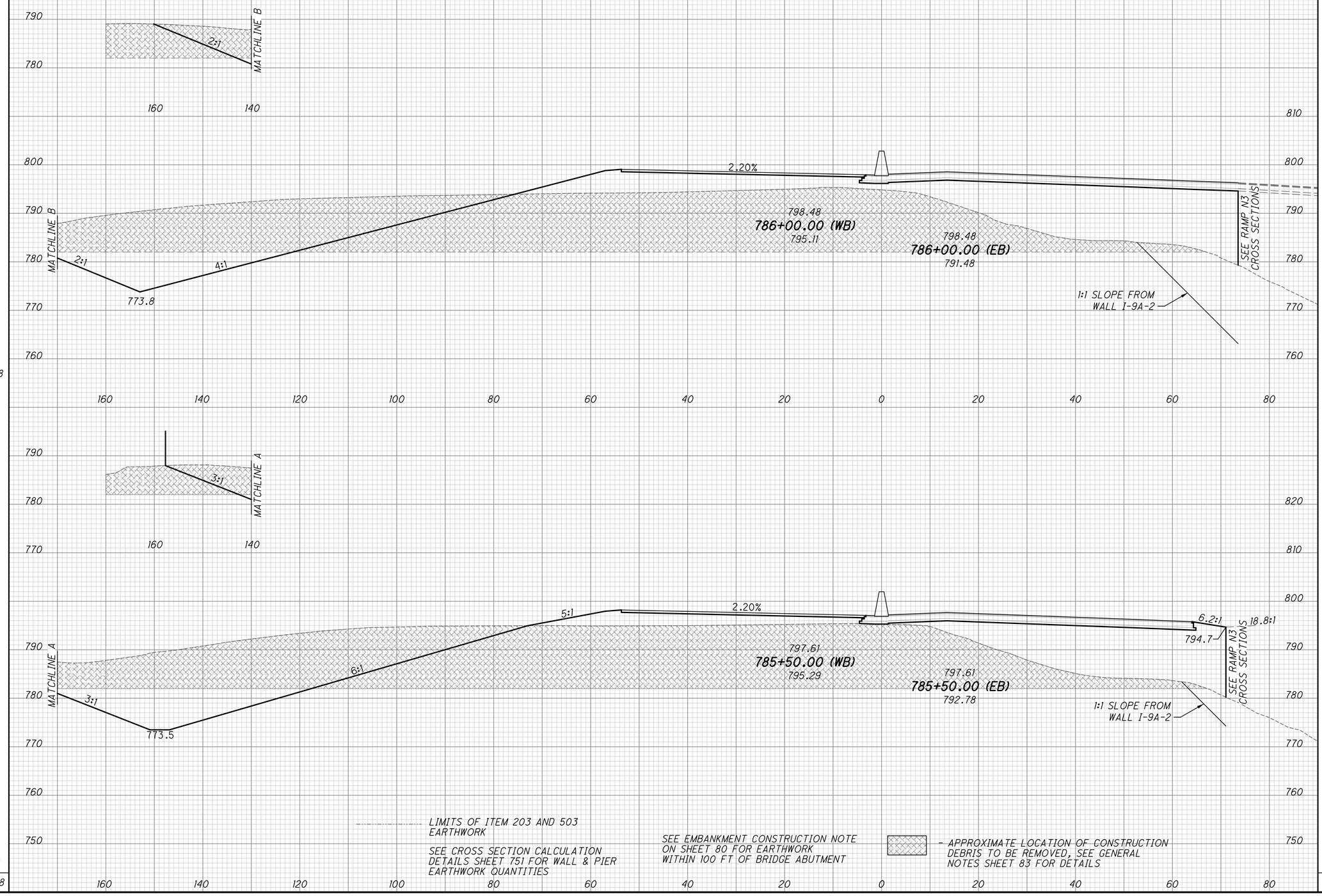

LIMITS OF ITEM 203 AND 503 EARTHWORK

SEE CROSS SECTION CALCULATION DETAILS SHEET 751 FOR WALL & PIER EARTHWORK QUANTITIES

SEE EMBANKMENT CONSTRUCTION NOTE ON SHEET 80 FOR EARTHWORK WITHIN 100 FT OF BRIDGE ABUTMENT

- APPROXIMATE LOCATION OF CONSTRUCTION DEBRIS TO BE REMOVED, SEE GENERAL NOTES SHEET 83 FOR DETAILS

END AREA		VOLUME	
CUT	FILL	CUT	FILL
353	331	AH	
381	2709	BK	
		619	4405
381	2709		
		685	4587
359	2245		
		167	1044
		1471	10036

CALCULATED MAH
CHECKED BSB

CROSS SECTIONS IR-70
STA. 785+50.00 TO STA. 786+00.00

FRA-70-14.54

780
2317

PLOT.CEL

ms consultants, inc.
msconsultants.com

SEEDING	
END WIDTH	SQ. YDS.
148	
	813
145	
	98
	336

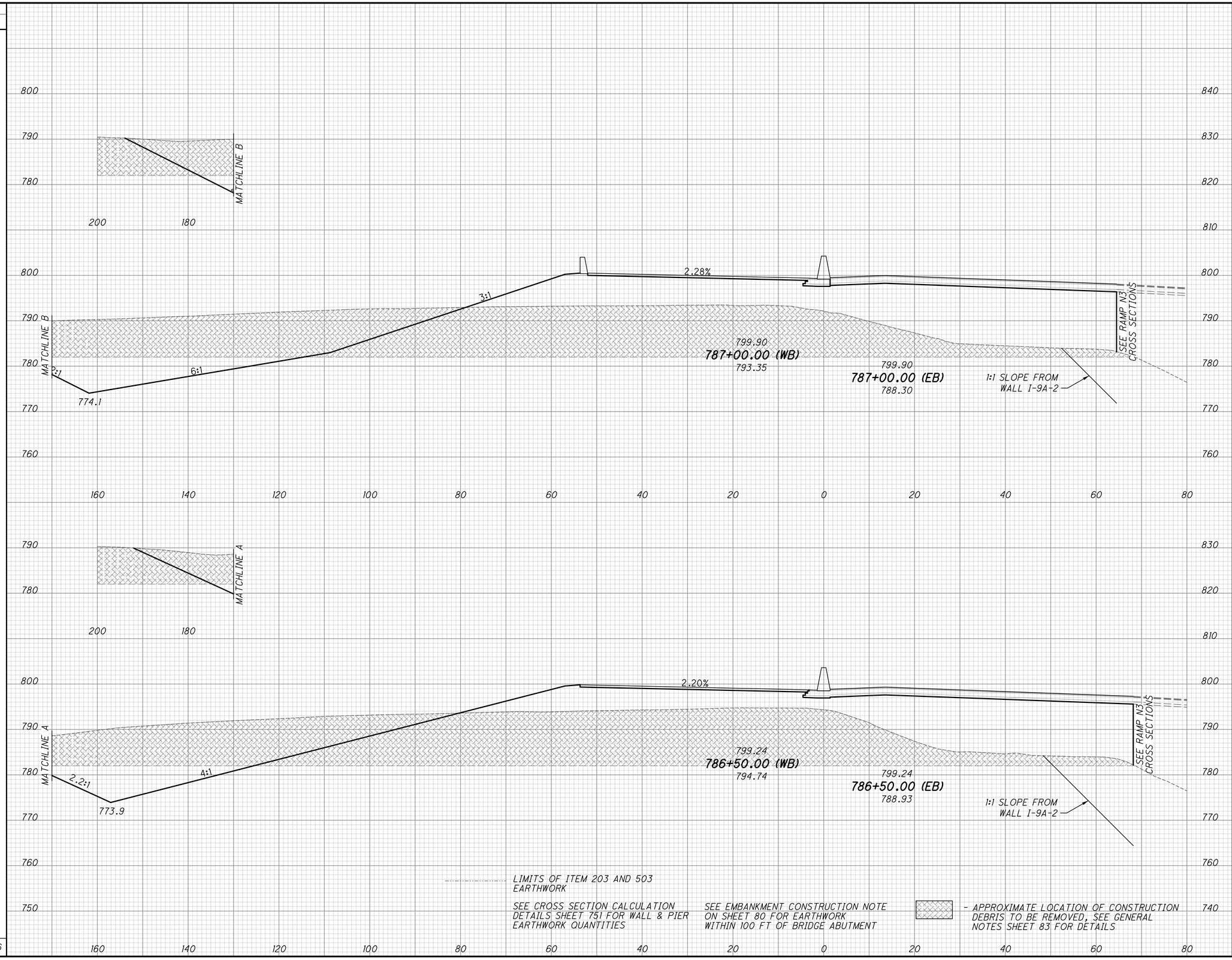

LIMITS OF ITEM 203 AND 503 EARTHWORK

SEE CROSS SECTION CALCULATION DETAILS SHEET 751 FOR WALL & PIER EARTHWORK QUANTITIES

SEE EMBANKMENT CONSTRUCTION NOTE ON SHEET 80 FOR EARTHWORK WITHIN 100 FT OF BRIDGE ABUTMENT

- APPROXIMATE LOCATION OF CONSTRUCTION DEBRIS TO BE REMOVED, SEE GENERAL NOTES SHEET 83 FOR DETAILS

END AREA		VOLUME	
CUT	FILL	CUT	FILL
302	248		
		607	536
353	331		
		80	75
		687	611

CALCULATED MAH
CHECKED BSB

CROSS SECTIONS IR-70
STA. 786+50.00 TO STA. 787+00.00

FRA-70-14.54

781
2317

ms consultants, inc.

Ohio DOT Workspace
70\71 East Interchange 2E
www.msconsultants.com

0 1" 0.5"

PDF: ohdot\V8i
DGN: 60-06634_2E_Columbus

Batchplot Spec: \\msconsultants.com\files\production\03\60\06634_2E\standards\ohdot\batchplt.SPC
Pen Table: \\msconsultants.com\files\Standards\usth\ohdot\V8\ms\plotting\pen\V8i_ms_std.TBL
Plot Driver: \\msconsultants.com\files\Standards\usth\ohdot\v8i\ms\plotting\PDF.pltcfg

34" x 22"

Model: Sheet
Printed: 6/19/2018 @ 8:54:08 AM
File: N:\03\60\06634_2E\roadway\sheets\05322XS1102.dgn
View: SHEET
By: jdouglas

PLOT.CEL

ms consultants, inc.
msconsultants.com

SEEDING	
END WIDTH	SQ. YDS.
61	701
43	151
48	151
	1103

LIMITS OF ITEM 203 AND 503 EARTHWORK

SEE CROSS SECTION CALCULATION DETAILS SHEET 751 FOR WALL & PIER EARTHWORK QUANTITIES

SEE EMBANKMENT CONSTRUCTION NOTE ON SHEET 80 FOR EARTHWORK WITHIN 100 FT OF BRIDGE ABUTMENT

- APPROXIMATE LOCATION OF CONSTRUCTION DEBRIS TO BE REMOVED, SEE GENERAL NOTES SHEET 83 FOR DETAILS

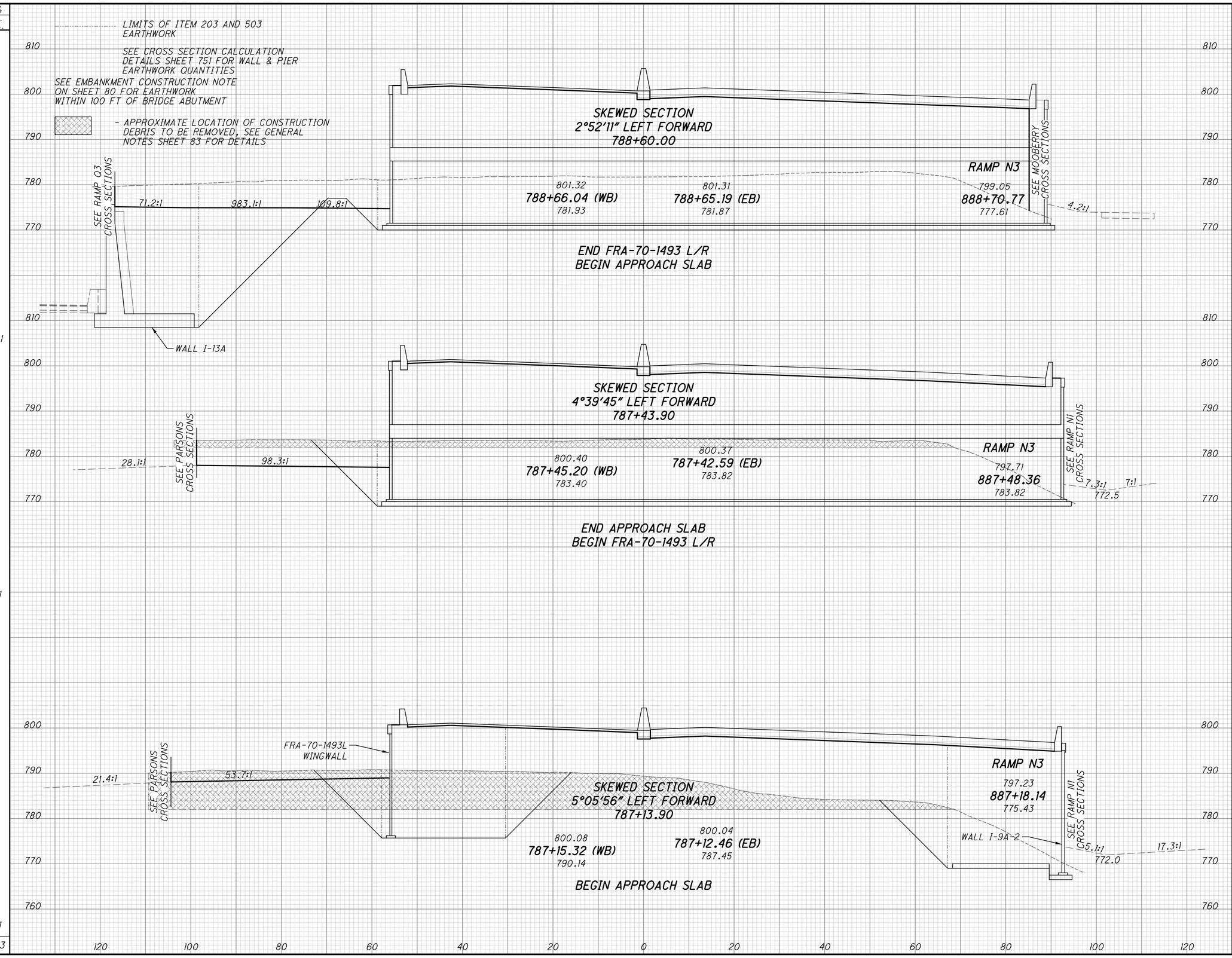

END AREA		VOLUME	
CUT	FILL	CUT	FILL
598	356	AH ONLY	
192	0	BK ONLY	
124	323		
176	196		
110	147		
286	343		

CALCULATED MAH
CHECKED BSB

CROSS SECTIONS IR-70
STA. 787+13.90 TO STA. 788+66.00

FRA-70-14.54

782
2317

ms consultants, inc.

Batchplot Spec= \\msconsultants.com\files\production\03\60\06634.2E\standards\plotdrv\batchplt.spc
Pen Table= \\msconsultants.com\files\Standards\usth\ohdot\V8i\ms\plotting\pen\V8i_ms_std.tbl PCF: ohdotV8i
Plot Driver= \\msconsultants.com\files\Standards\usth\ohdot\V8i\ms\plotting\PDF.pltcfg PCF: 60-06634_2E_Columbus
Ohio DOT Workspace
70\71 East Interchange 2E
www.msconsultants.com
34" x 22"
Model: Sheet
Printed: 6/19/2018 @ 8:54:09 AM By: jdougas View: FENCE_VIEW1
File= N:\03\60\06634_2E\roadway\sheets\105322XS1103.dgn

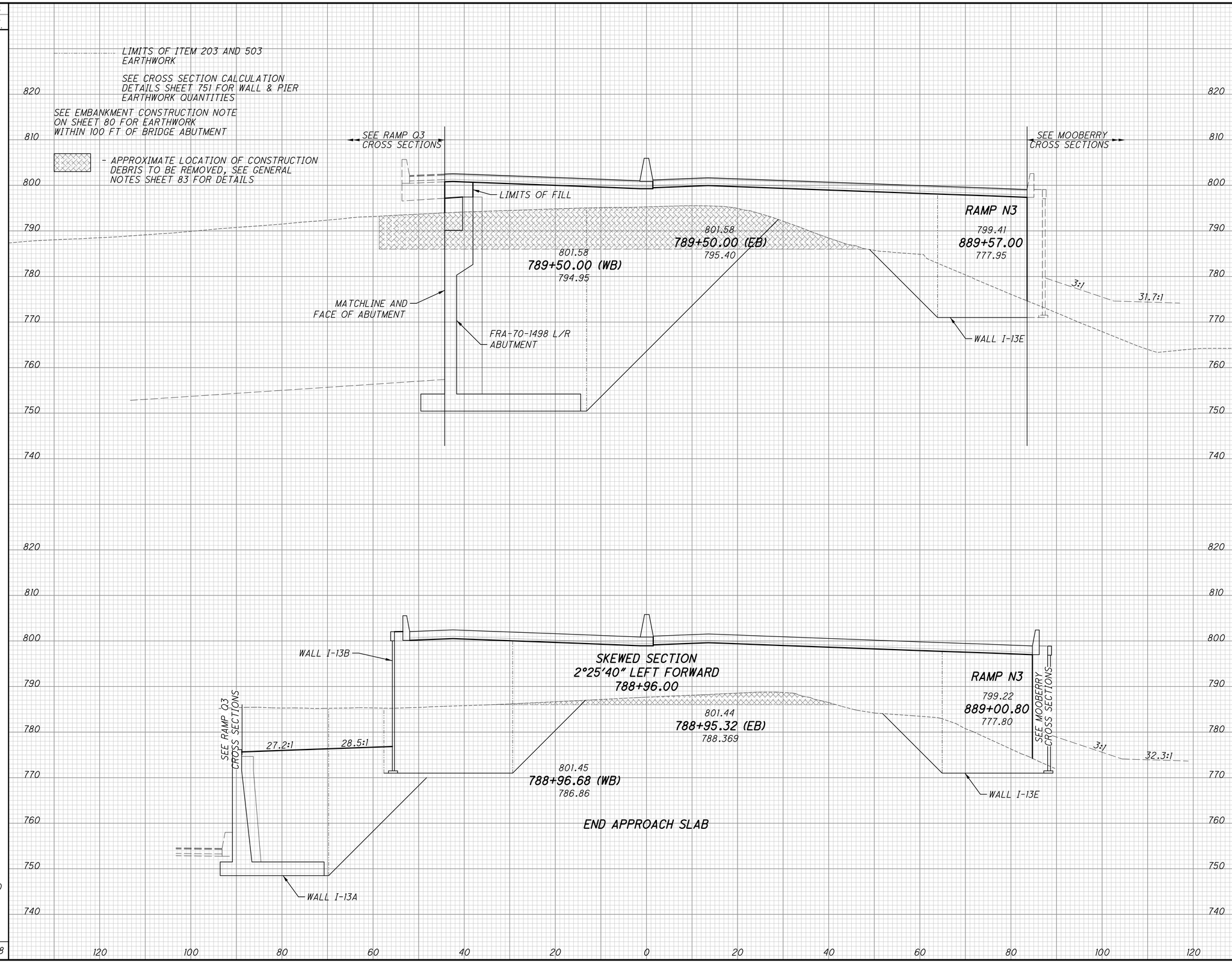

SEEDING END WIDTH	SEEDING SQ. YDS.	END AREA CUT	END AREA FILL	VOLUME CUT	VOLUME FILL
0		729	0		
	98			1330	316
33		618	320		
	160			690	384
	258			2020	700

CALCULATED MAH
CHECKED BSB

CROSS SECTIONS IR-70
STA. 788+96.00 TO STA. 789+50.00

FRA-70-14.54

783
2317

ms consultants, inc.

PLOT.CEL
ms consultants, inc.
msconsultants.com
www.msconsultants.com
Ohio DOT Workspace
70\71 East Interchange 2E
Batchplot Spec: \\msconsultants.com\files\production\03\60\06634_2E\standards\plotdrv\batchplt.spc
Pen Table: \\msconsultants.com\files\Standards\ustn\ohdot\V8i\ms\plotting\pen\V8i_ms_std.tbl
Plot Driver: \\msconsultants.com\files\Standards\ustn\ohdot\V8i\ms\plotting\PDF.pltcfg
34" x 22"
View: FENCE_VIEW1
By: jdouglas
Model: Sheet
Printed: 6/19/2018 @ 8:54:10 AM
File: N:\03\60\06634_2E\roadway\sheets\105322XS1104.dgn

PLOT.CEL

ms consultants, inc.
msconsultants.com

Ohio DOT Workspace
70\71 East Interchange 2E
www.msconsultants.com

Batchplot Spec: \\msconsultants.com\files\production\03\60\06634_2E\standards\plotdrv\batchplt.spc
Pen Table: \\msconsultants.com\files\Standards\ustn\ohdot\V8i\ms\plotting\pen\V8i_ms_std.tbl
Plot Driver: \\msconsultants.com\files\Standards\ustn\ohdot\v8i\ms\plotting\PDF.pltcfg

34" x 22"

View: FENCE_VIEW1
By: jdouglas
Model: Sheet
Printed: 6/19/2018 @ 8:54:12 AM
File: N:\03\60\06634_2E\roadway\sheets\105322XS1105.dgn

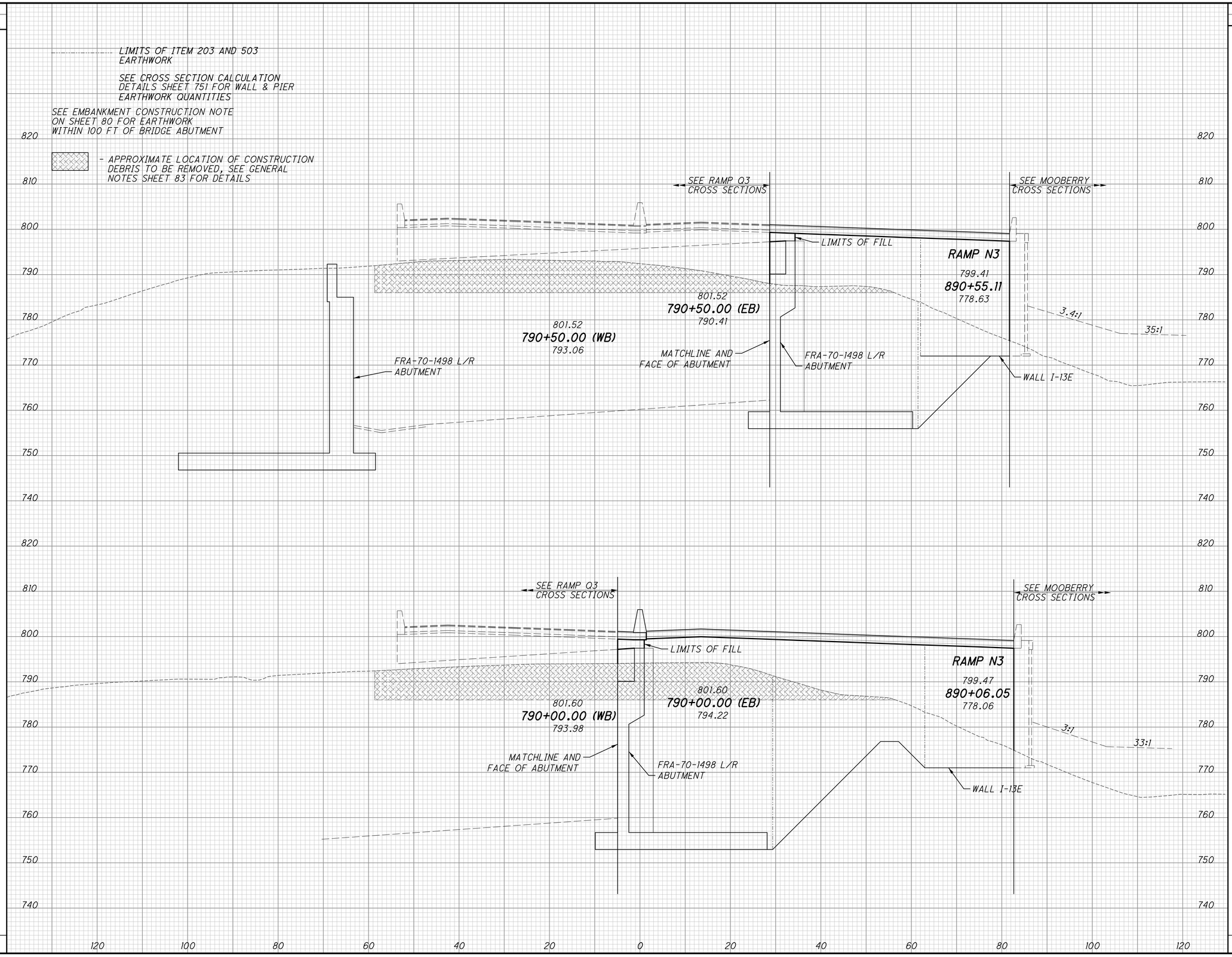

SEEDING END WIDTH	SEEDING SQ. YDS.	END AREA CUT	END AREA FILL	VOLUME CUT	VOLUME FILL
0		136	0		
	0			684	0
0		603	0		
	0			1233	0
	0			1917	0

CALCULATED MAH
CHECKED BSB

CROSS SECTIONS IR-70
STA. 790+00.00 TO STA. 790+50.00

FRA-70-14.54

ms consultants, inc.

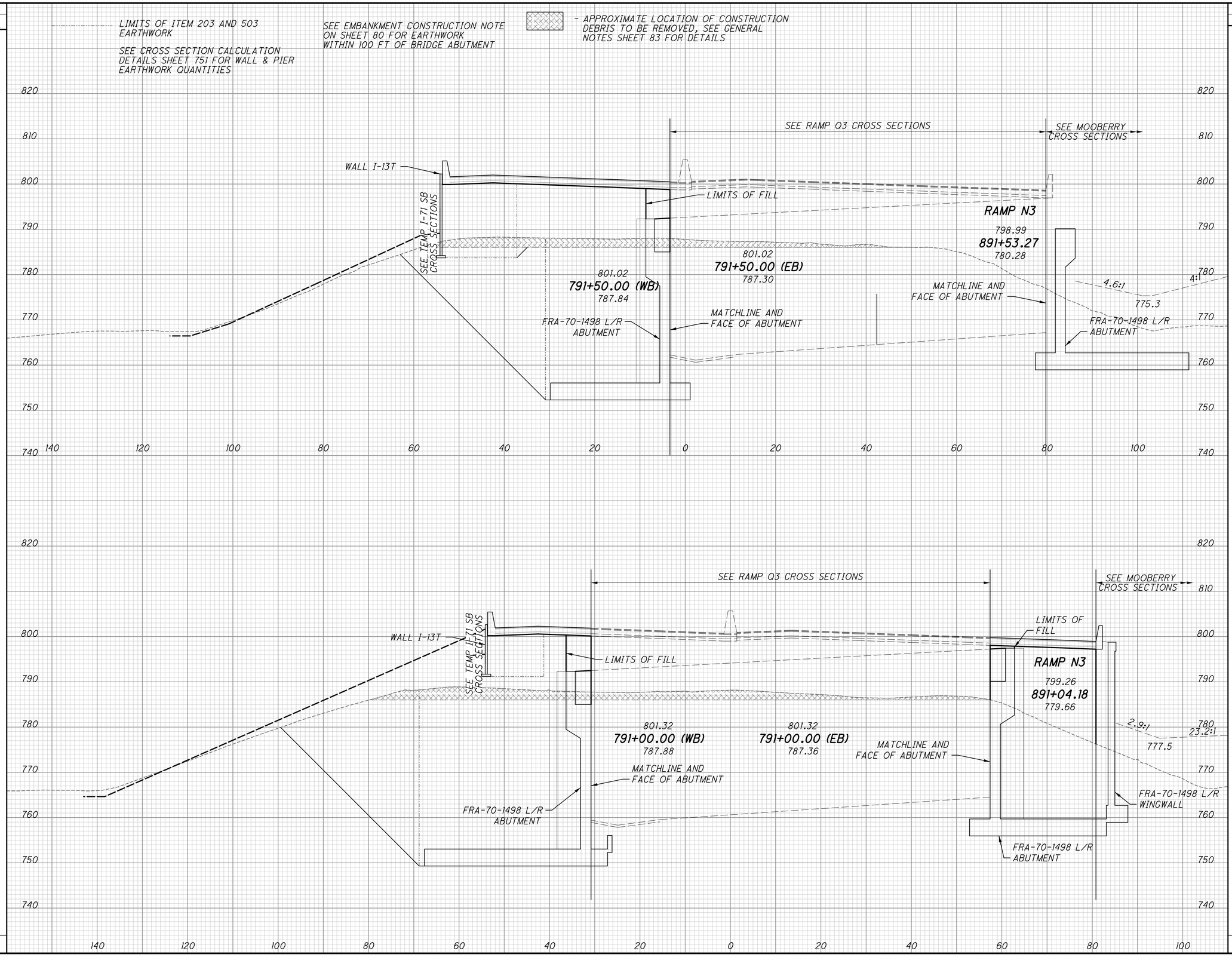

SEEDING END WIDTH	SEEDING SQ. YDS.	END AREA CUT	END AREA FILL	VOLUME CUT	VOLUME FILL
0		475	0		
	0			440	0
0		0	0		
	0			126	0
	0			566	0

CALCULATED MAH
CHECKED BSB

CROSS SECTIONS IR-70
STA. 791+00.00 TO STA. 791+50.00

FRA-70-14.54

785
2317

PLOT.CEL
ms consultants, inc.
msconsultants.com
www.msconsultants.com
Ohio DOT Workspace
70\71 East Interchange 2E
Batchplot Spec: \\msconsultants.com\files\production\03\60\06634_2E\standards\plotdrv\batchplt.spc
Pen Table: \\msconsultants.com\files\Standards\ustn\ohdot\V8i\ms\plotting\pen\V8i_ms_std.tbl
Plot Driver: \\msconsultants.com\files\Standards\ustn\ohdot\v8i\ms\plotting\PDF.pltcfg
34" x 22"
View: FENCE_VIEW1
By: jdouglas
Model: Sheet
Printed: 6/19/2018 @ 8:54:13 AM
File: N:\03\60\06634_2E\roadway\sheets\105322XS1106.dgn
ms consultants, inc.

PLOT.CEL

ms consultants, inc.
msconsultants.com

www.msconsultants.com

Ohio DOT Workspace
70\71 East Interchange 2E

1" 0 0.5"

Batchplot Spec: \\msconsultants.com\files\production\03\60\06634_2E\standards\plotdrv\batchplt.spc PCF: ohdot1V8i
Pen Table: \\msconsultants.com\files\Standards\usth\ohdot\V8i\ms\plotting\pen\V8i_ms_std.tbl PCF: 60-06634_2E_Columbus
Plot Driver: \\msconsultants.com\files\Standards\usth\ohdot\v8i\ms\plotting\PDF.pltcfg

Model: Sheet View: FENCE_VIEW1
Printed: 6/19/2018 @ 8:54:14 AM By: jdoughas
File: N:\03\60\06634_2E\roadway\sheets\105322XS107.dgn

34" x 22"

SEEDING	
END WIDTH	SQ. YDS.
0	0
	0
	0
	0

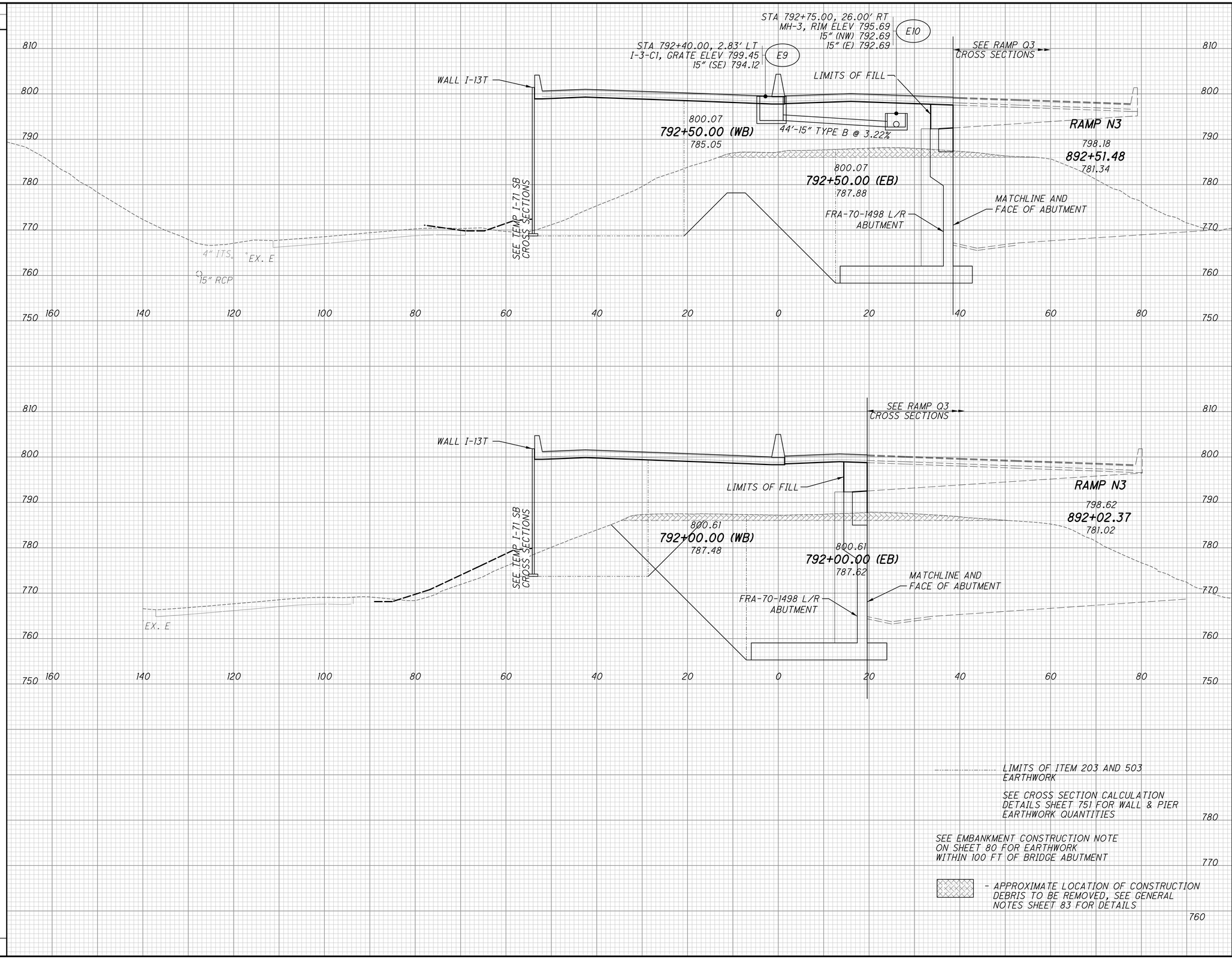

LIMITS OF ITEM 203 AND 503 EARTHWORK

SEE CROSS SECTION CALCULATION DETAILS SHEET 751 FOR WALL & PIER EARTHWORK QUANTITIES

SEE EMBANKMENT CONSTRUCTION NOTE ON SHEET 80 FOR EARTHWORK WITHIN 100 FT OF BRIDGE ABUTMENT

- APPROXIMATE LOCATION OF CONSTRUCTION DEBRIS TO BE REMOVED, SEE GENERAL NOTES SHEET 83 FOR DETAILS

END AREA		VOLUME	
CUT	FILL	CUT	FILL
490	0		
		855	0
433	0		
		841	0
		1696	0

CALCULATED MAH
CHECKED BSB

CROSS SECTIONS IR-70
STA. 792+00.00 TO STA. 792+50.00

FRA-70-14.54

786
2317

ms consultants, inc.

PLOT.CEL

ms consultants, inc.
msconsultants.com

www.msconsultants.com

Ohio DOT Workspace
70\71 East Interchange 2E

1" 0 0.5"

PDF: ohdot\V8i
PDF: 60-06634_2E_Columbus

Batchplot Spec= \\msconsultants.com\files\production\03\60\06634_2E\standards\plotdir\batchplt.spc
Pen Table= \\msconsultants.com\files\Standards\usth\ohdot\V8i\ms\plotting\pen\V8i_ms_std.tbl
Plot Driver= \\msconsultants.com\files\Standards\usth\ohdot\v8i\ms\plotting\PDF.pltcfg

34" x 22"

Model: Sheet
Printed: 6/19/2018 @ 8:54:15 AM
File= N:\03\60\06634_2E\roadway\sheets\105322XS1108.dgn
View: FENCE_VIEW1
By= jdouglas

SEEDING

END WIDTH	SQ. YDS.
0	0
0	0

LIMITS OF ITEM 203 AND 503 EARTHWORK

SEE CROSS SECTION CALCULATION DETAILS SHEET 751 FOR WALL & PIER EARTHWORK QUANTITIES

SEE EMBANKMENT CONSTRUCTION NOTE ON SHEET 80 FOR EARTHWORK WITHIN 100 FT OF BRIDGE ABUTMENT

- APPROXIMATE LOCATION OF CONSTRUCTION DEBRIS TO BE REMOVED, SEE GENERAL NOTES SHEET 83 FOR DETAILS

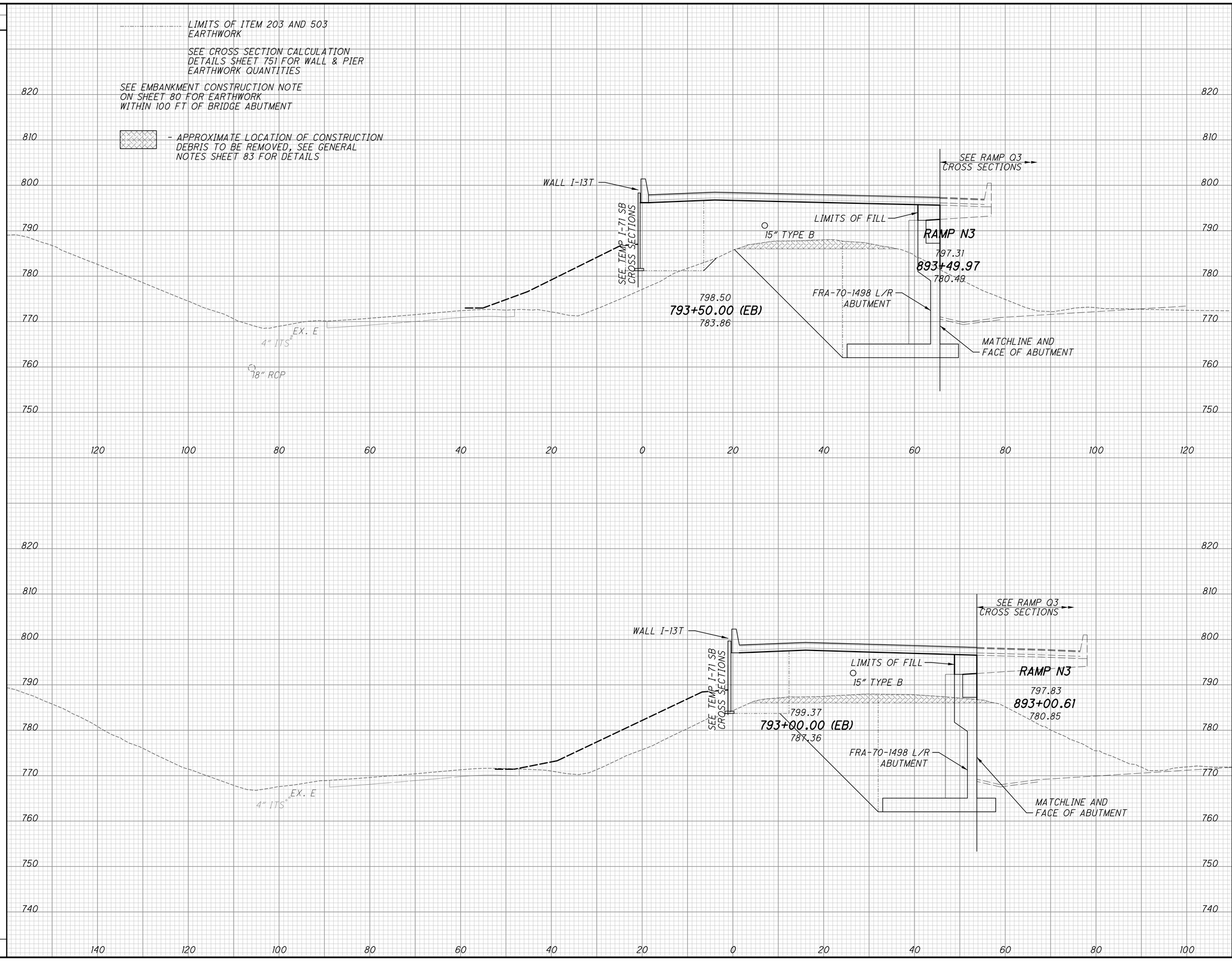

END AREA CUT	END AREA FILL	VOLUME CUT	VOLUME FILL
289	0		
		524	0
276	0		
		710	0
		1234	0

CALCULATED MAH
CHECKED BSB

CROSS SECTIONS IR-70
STA. 793+00.00 TO STA. 793+50.00

FRA-70-14.54

787
2317

ms consultants, inc.

PLOT.CEL

ms consultants, inc.
msconsultants.com

SEEDING	
END WIDTH	SQ. YDS.
0	0
0	0

LIMITS OF ITEM 203 AND 503 EARTHWORK

SEE CROSS SECTION CALCULATION DETAILS SHEET 751 FOR WALL & PIER EARTHWORK QUANTITIES

SEE EMBANKMENT CONSTRUCTION NOTE ON SHEET 80 FOR EARTHWORK WITHIN 100 FT OF BRIDGE ABUTMENT

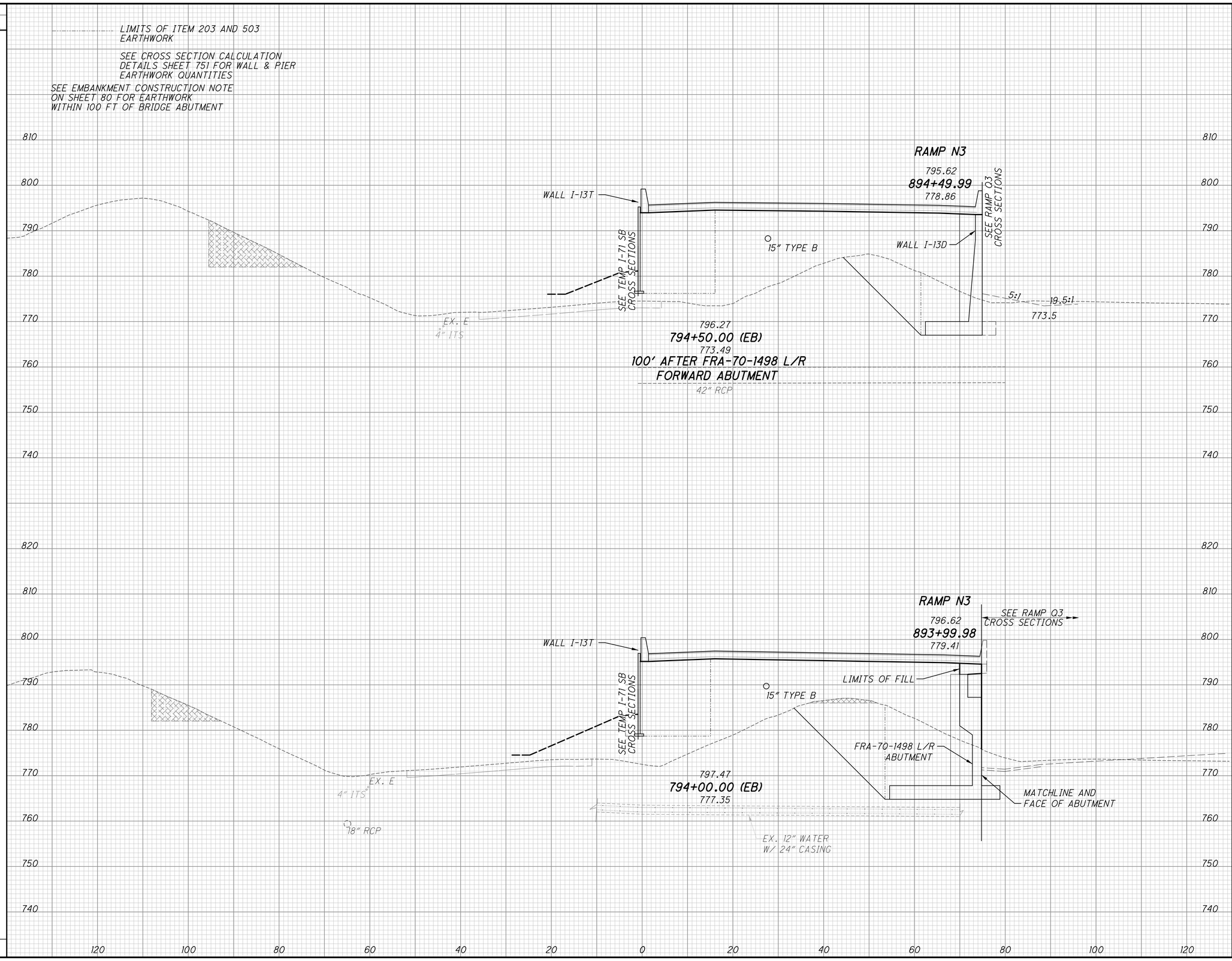

END AREA		VOLUME	
CUT	FILL	CUT	FILL
144	934		
		339	865
222	0		
		473	0
		812	865

CALCULATED MAH
CHECKED BSB

CROSS SECTIONS IR-70
STA. 794+00.00 TO STA. 794+50.00

FRA-70-14.54

788
2317

ms consultants, inc.

Batchplot Spec= \\msconsultants.com\files\production\03\60\06634_2E\standards\plotdrv\batchplt.spc
Pen Table= \\msconsultants.com\files\Standards\usth\ohdot\V8i\ms\plotting\pen\V8i_ms_std.tbl
Plot Driver= \\msconsultants.com\files\Standards\usth\ohdot\v8i\ms\plotting\PDF.pltcfg

Model: Sheet
Printed: 6/19/2018 @ 8:54:17 AM
File= N:\03\60\06634_2E\roadway\sheets\105322XS1109.dgn

View: FENCE_VIEW1
By: jdouglas

34" x 22"

Ohio DOT Workspace
70\71 East Interchange 2E
DGN: ohdot\V8i
PCF: 60-06634_2E_Columbus

www.msconsultants.com

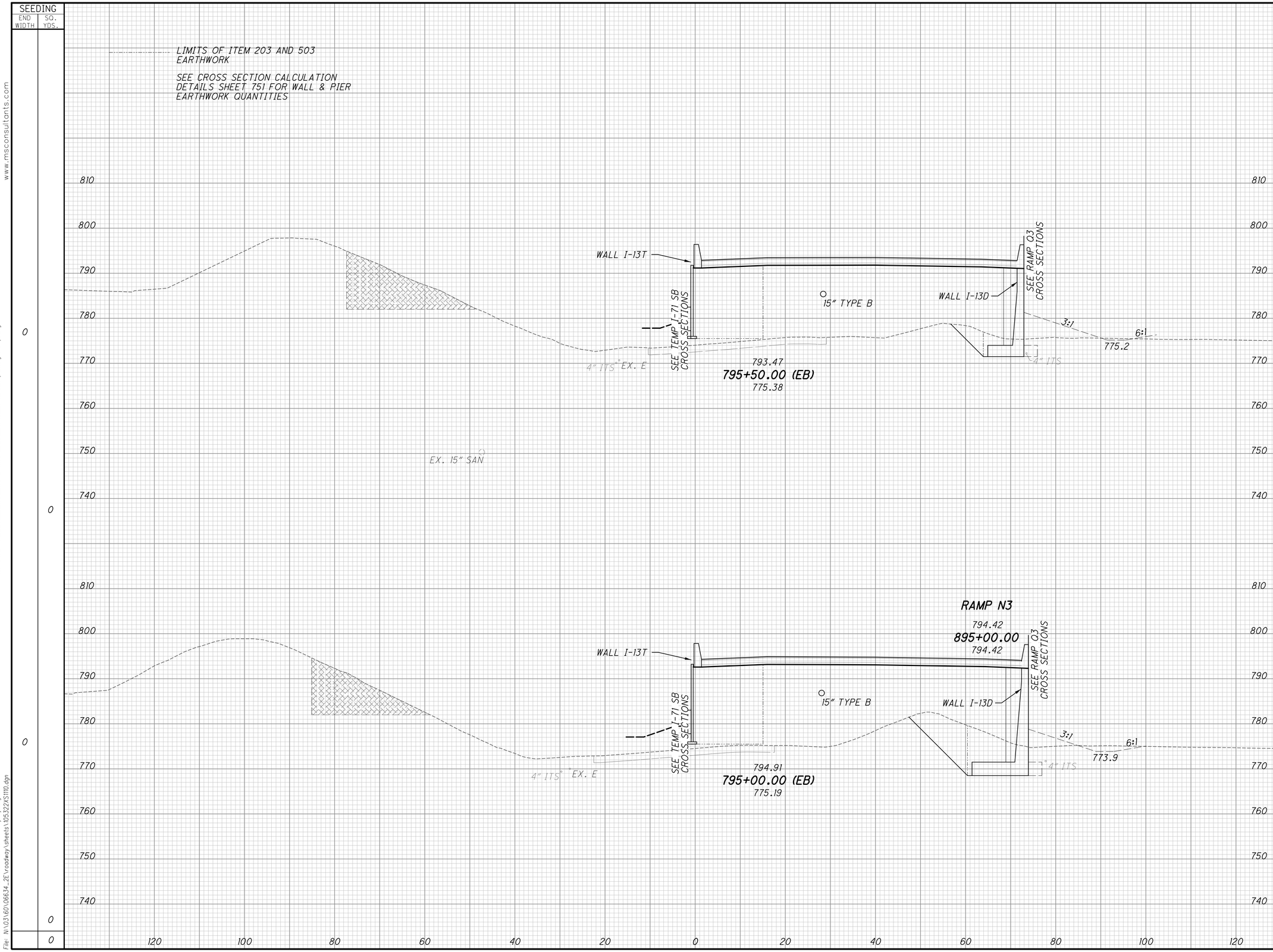

SEEDING END WIDTH	SEEDING SQ. YDS.	END AREA CUT	END AREA FILL	VOLUME CUT	VOLUME FILL
0		67	885		
	0			167	1676
0		113	925		
	0			238	1721
	0			405	3397

CALCULATED MAH
CHECKED BSB

CROSS SECTIONS IR-70
STA. 795+00.00 TO STA. 795+50.00

FRA-70-14.54

789
2317

ms consultants, inc.

PLOT.CEL
ms consultants, inc.
msconsultants.com
www.msconsultants.com
Ohio DOT Workspace
70\71 East Interchange 2E
PCF: 60-06634_2E_Columbus
PCF: ohdotV8i
Batchplot Spec: \\msconsultants.com\files\production\03\60\06634_2E\standards\plotdrv\batchplt.spc
Pen Table: \\msconsultants.com\files\Standards\ustn\ohdot\V8i\ms\plotting\pen\V8i_ms_std.tbl
Plot Driver: \\msconsultants.com\files\Standards\ustn\ohdot\v8i\ms\plotting\PDF.pltcfg
34" x 22"
View: SHEET
By: jdouglas
Model: Sheet
Printed: 6/19/2018 @ 8:54:18 AM
File: N:\03\60\06634_2E\roadway\sheets\105322XS1110.dgn

PLOT.CEL

ms consultants, inc.
msconsultants.com

Ohio DOT Workspace
70\71 East Interchange 2E
www.msconsultants.com

Batchplot Spec: \\msconsultants.com\files\production\03\60\06634_2E\standards\plotdrv\batchplt.spec
Pen Table: \\msconsultants.com\files\Standards\ustn\ohdot\V8i\ms\plotting\pen\V8i_ms_std.tbl
Plot Driver: \\msconsultants.com\files\Standards\ustn\ohdot\v8i\ms\plotting\PDF.pltcfg

34" x 22"

Model: Sheet
Printed: 6/19/2018 @ 8:54:19 AM
File: N:\03\60\06634_2E\roadway\sheets\105322XS1111.dgn
View: SHEET
By: jdouglas

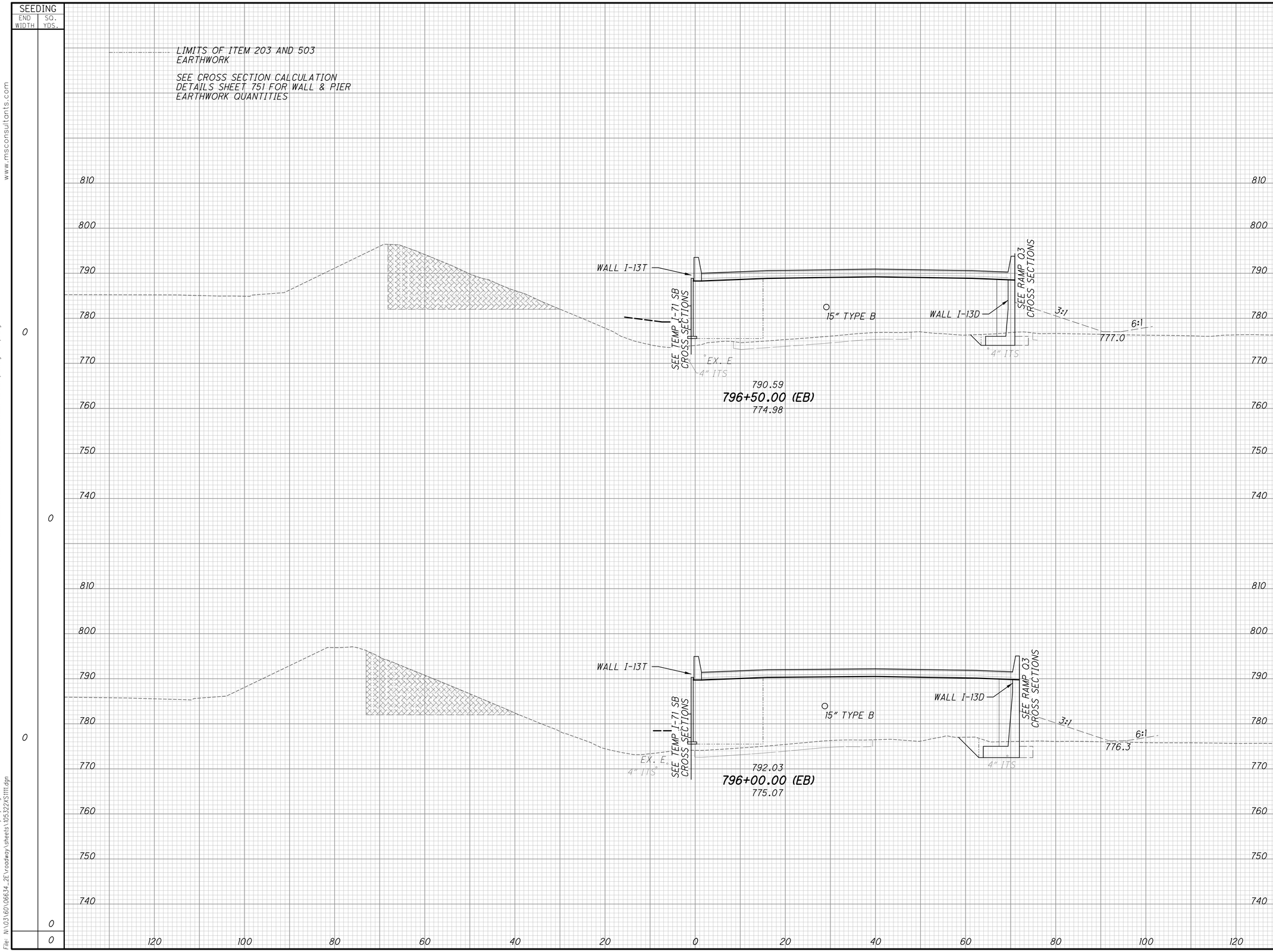

SEEDING END WIDTH	SEEDING SQ. YDS.	END AREA CUT	END AREA FILL	VOLUME CUT	VOLUME FILL
0		62	736		
	0			122	1442
0		69	821		
	0			126	1580
	0			248	3022

CALCULATED MAH
CHECKED BSB

CROSS SECTIONS IR-70
STA. 796+00.00 TO STA. 796+50.00

FRA-70-14.54

790
2317

ms consultants, inc.

PLOT.CEL

ms consultants, inc.
msconsultants.com

www.msconsultants.com
Ohio DOT Workspace
70\71 East Interchange 2E

Batchplot Spec: \\msconsultants.com\files\production\03\60\06634_2E\standards\plotdrv\batchplt.SPC
Pen Table: \\msconsultants.com\files\Standards\ustn\ohdot\V8\ms\plotting\pen\V8i_ms_std.tbl
Plot Driver: \\msconsultants.com\files\Standards\ustn\ohdot\v8i\ms\plotting\PDF.pltcfg
PDF: ohdotV8i
DGN: 60-06634_2E_Columbus

Model: Sheet
Printed: 6/19/2018 @ 8:54:26 AM
File: N:\03\60\06634_2E\roadway\sheets\105322XS112.dgn
View: SHEET
By: jdoughs

34" x 22"

SEEDING	
END WIDTH	SQ. YDS.
0	0
0	0
0	0
0	0

LIMITS OF ITEM 203 AND 503 EARTHWORK

SEE CROSS SECTION CALCULATION DETAILS SHEET 751 FOR WALL & PIER EARTHWORK QUANTITIES

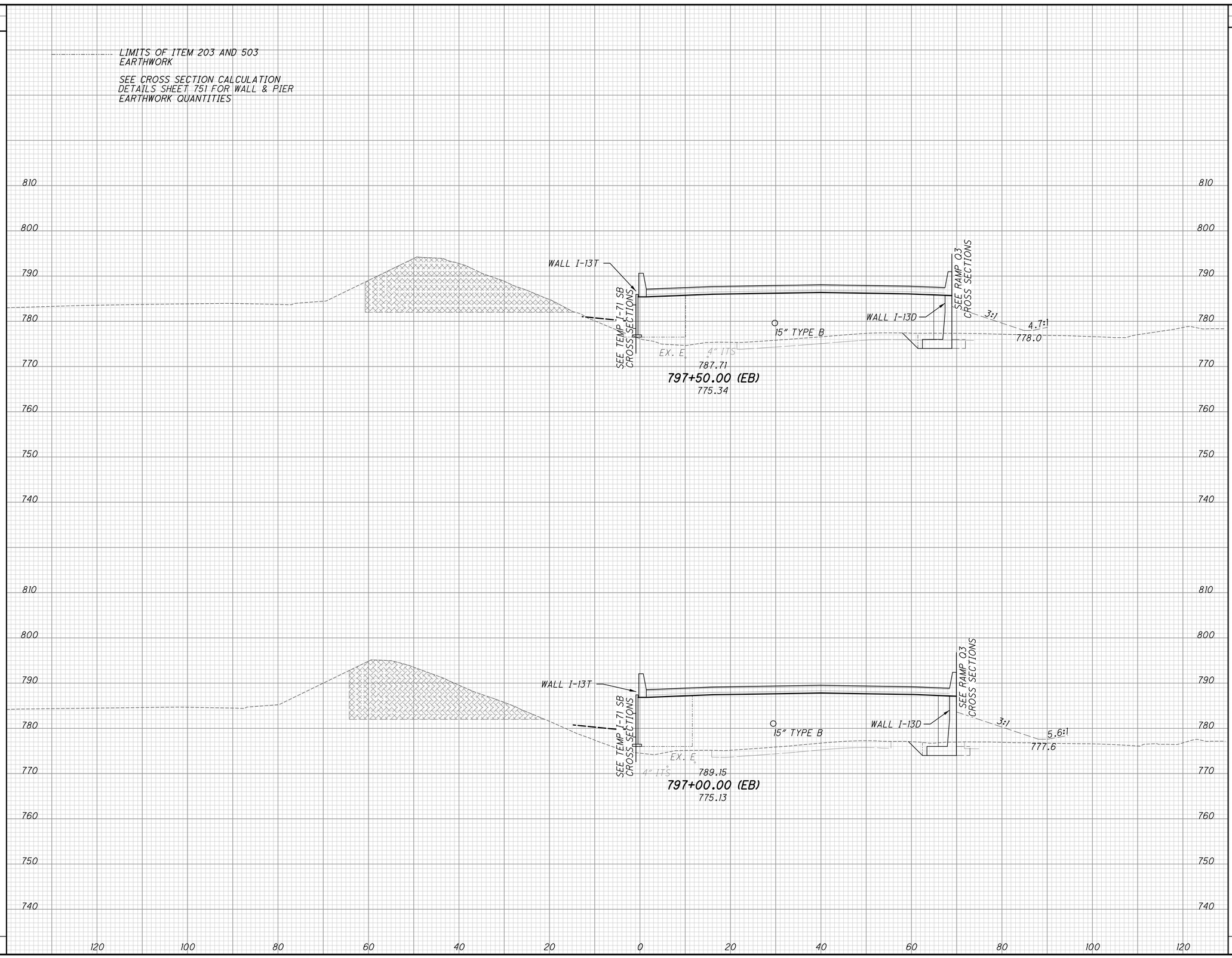

END AREA		VOLUME	
CUT	FILL	CUT	FILL
62	612		
116	1207		
64	692		
117	1322		
233	2529		

CALCULATED MAH
CHECKED BSB

CROSS SECTIONS IR-70
STA. 797+00.00 TO STA. 797+50.00

FRA-70-14.54

791
2317

PLOT.CEL

ms consultants, inc.
msconsultants.com

www.msconsultants.com

Ohio DOT Workspace
70\71 East Interchange 2E

1"
0.5"
0

34" x 22"

Batchplot Spec: \\msconsultants.com\Files\Production\03\60\06634.2E\standards\plotdrv\batchplt.SPC
Pen Table: \\msconsultants.com\Files\Standards\ustn\ohdot\V8\ms\plotting\pen\V8i_ms_std.tbl
Plot Driver: \\msconsultants.com\Files\Standards\ustn\ohdot\v8i\ms\plotting\PDF.pltcfg
PDF: ohdotV8i
PDF: 60-06634_2E_Columbus

Model: Sheet
Printed: 6/19/2018 @ 8:54:28 AM
File: N:\03\60\06634.2E\roadway\sheets\105322XS113.dgn
View: SHEET
By: jdouglas

SEEDING	
END WIDTH	SQ. YDS.
0	0
	0

LIMITS OF ITEM 203 AND 503 EARTHWORK

SEE CROSS SECTION CALCULATION DETAILS SHEET 751 FOR WALL & PIER EARTHWORK QUANTITIES

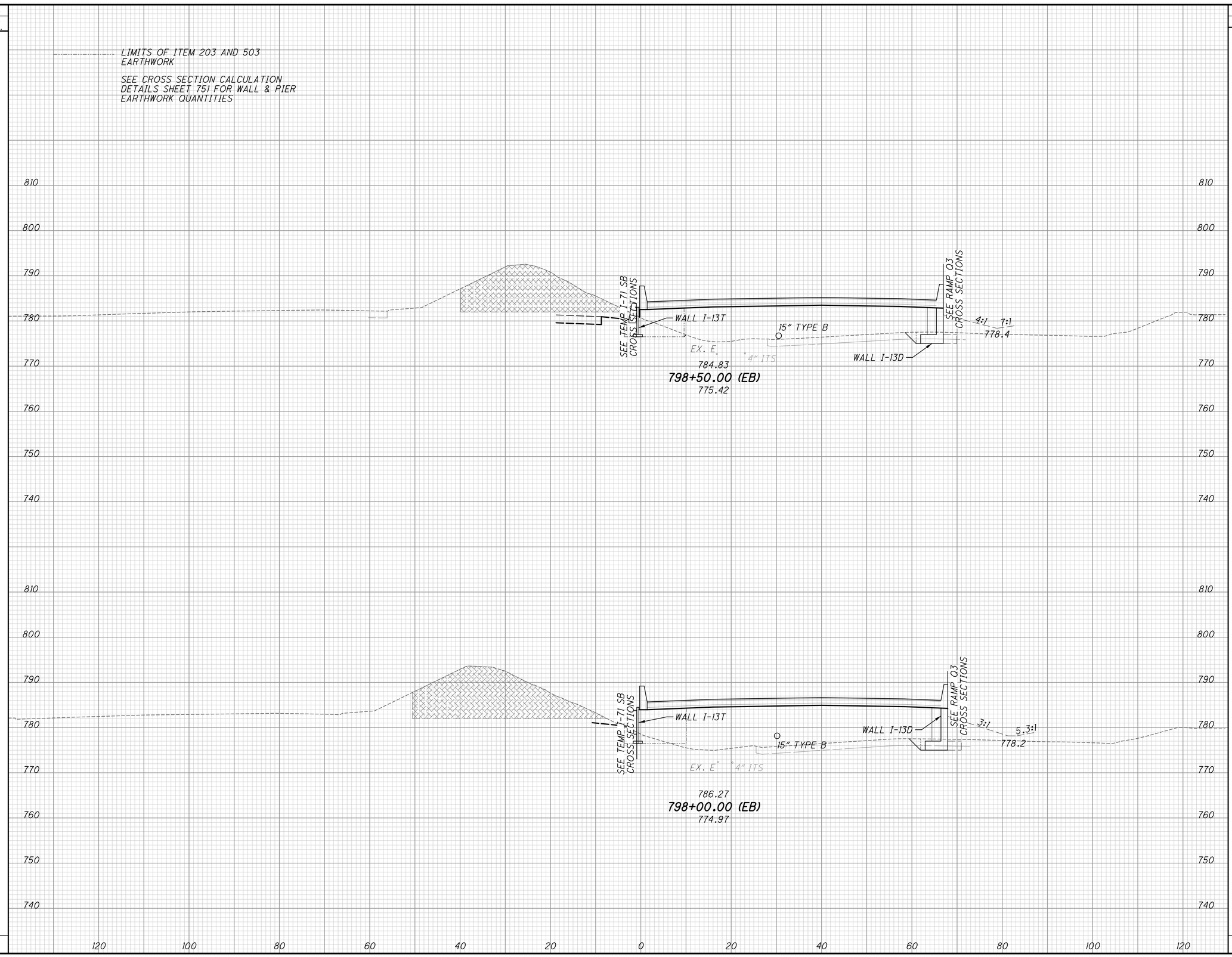

END AREA		VOLUME	
CUT	FILL	CUT	FILL
50	417		
		97	859
55	511		
		108	1039
		205	1898

CALCULATED MAH
CHECKED BSB

CROSS SECTIONS IR-70
STA. 798+00.00 TO STA. 798+50.00

FRA-70-14.54

792
2317

ms consultants, inc.

PLOT.CEL

ms consultants, inc.
msconsultants.com

Ohio DOT Workspace
70\71 East Interchange 2E

www.msconsultants.com

Batchplot Spec: \\msconsultants.com\files\production\03\60\06634_2E\standards\plotdrv\batchplt.spc
Pen Table: \\msconsultants.com\files\Standards\ustn\ohdot\V8i\ms\plotting\pen\V8i_ms_std.tbl
Plot Driver: \\msconsultants.com\files\Standards\ustn\ohdot\v8i\ms\plotting\PDF.pltcfg

34" x 22"

Model: Sheet
Printed: 6/19/2018 @ 8:54:29 AM
File: N:\03\60\06634_2E\roadway\sheets\105322XS1114.dgn
View: SHEET
By: jdouglas

SEEDING END WIDTH	SEEDING SQ. YDS.	END AREA CUT	END AREA FILL	VOLUME CUT	VOLUME FILL
0		63	249		
	0			101	533
0		46	327		
	0			89	688
	0			190	1221

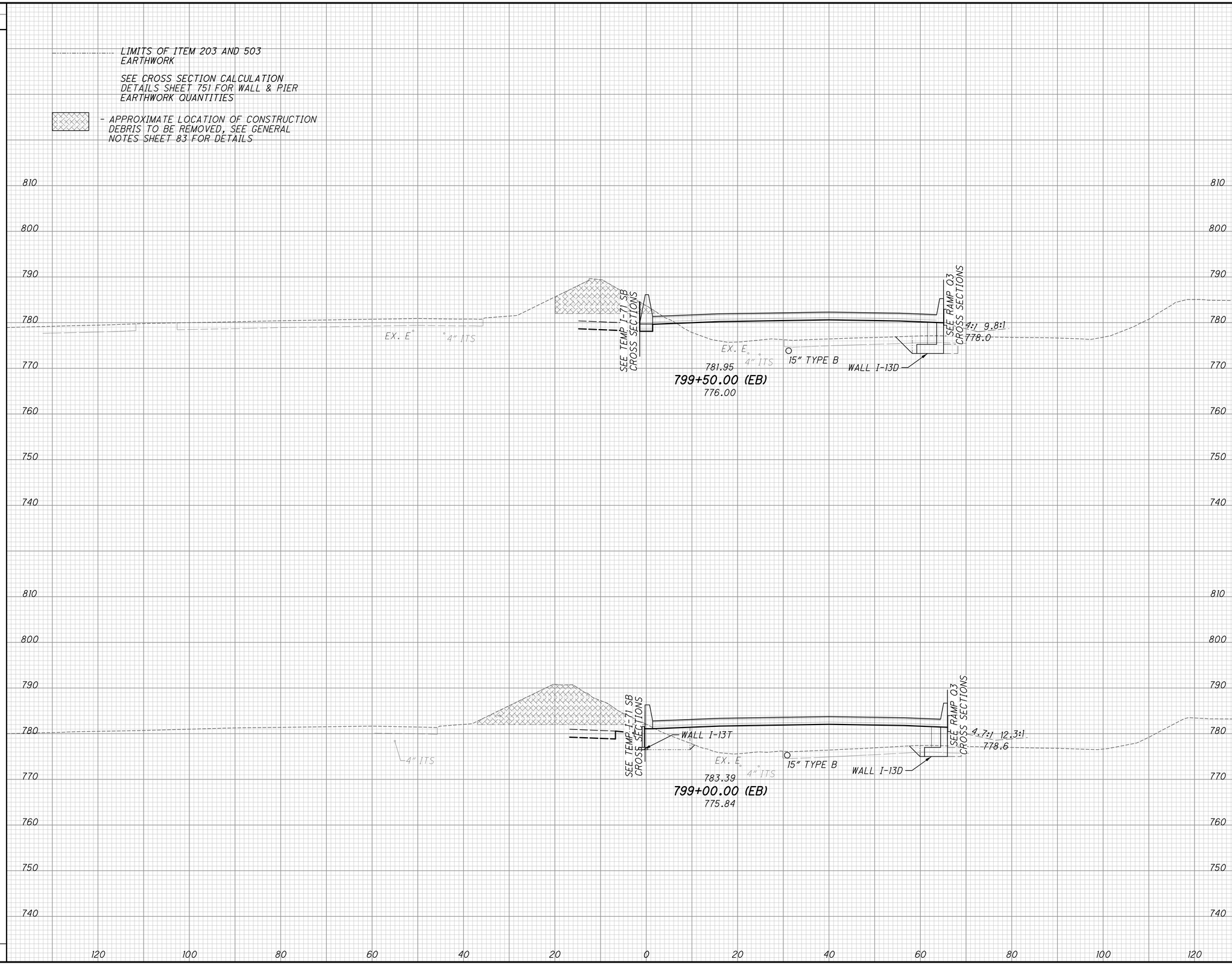

CALCULATED MAH
CHECKED BSB

CROSS SECTIONS IR-70
STA. 799+00.00 TO STA. 799+50.00

FRA-70-14.54

793
2317

ms consultants, inc.

PLOT.CEL

ms consultants, inc.
msconsultants.com

Ohio DOT Workspace
70\71 East Interchange 2E

www.msconsultants.com

0 0.5" 1"

Batchplot Spec: \\msconsultants.com\files\production\03\60\06634.2E\standards\plotdrv\batchplt.SPC
Pen Table: \\msconsultants.com\files\Standards\astm\ohdot\V8i\ms\plotting\pen\V8i_ms_std.tbl
Plot Driver: \\msconsultants.com\files\Standards\astm\ohdot\v8i\ms\plotting\PDF.pltcfg
PDF: ohdotV8i
PDF: 60-06634_2E_Columbus

34" x 22"

View: SHEET
By: jdouglas

Model: Sheet
Printed: 6/19/2018 @ 8:54:31 AM
File: N:\03\60\06634.2E\roadway\sheets\105222X5116.dgn

SEEDING	
END WIDTH	SQ. YDS.
0	0
0	0
0	0
0	0
0	0

LIMITS OF ITEM 203 AND 503 EARTHWORK

SEE CROSS SECTION CALCULATION DETAILS SHEET 751 FOR WALL & PIER EARTHWORK QUANTITIES

- APPROXIMATE LOCATION OF CONSTRUCTION DEBRIS TO BE REMOVED, SEE GENERAL NOTES SHEET 83 FOR DETAILS

END WALL I-13D
STA 800+62.50

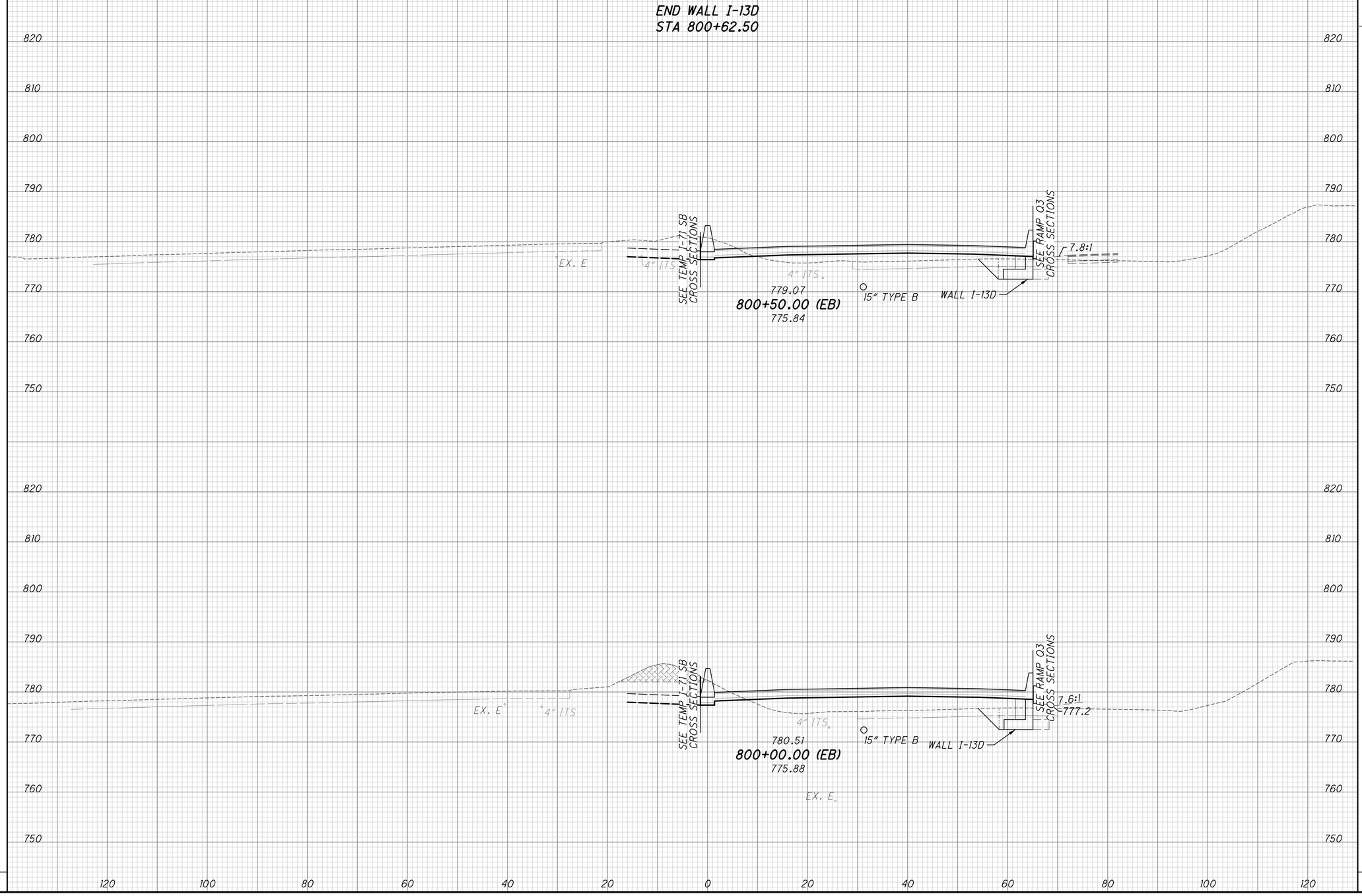

END AREA		VOLUME		
CUT	FILL	CUT	FILL	
78	59			AH
74	114			BK
		42	64	
74	114			
		134	274	
70	182			
		123	399	
		299	737	

CALCULATED MAH
CHECKED BSB

CROSS SECTIONS IR-70
STA. 800+00.00 TO STA. 800+50.00

FRA-70-14.54

794
2317

ms consultants, inc.

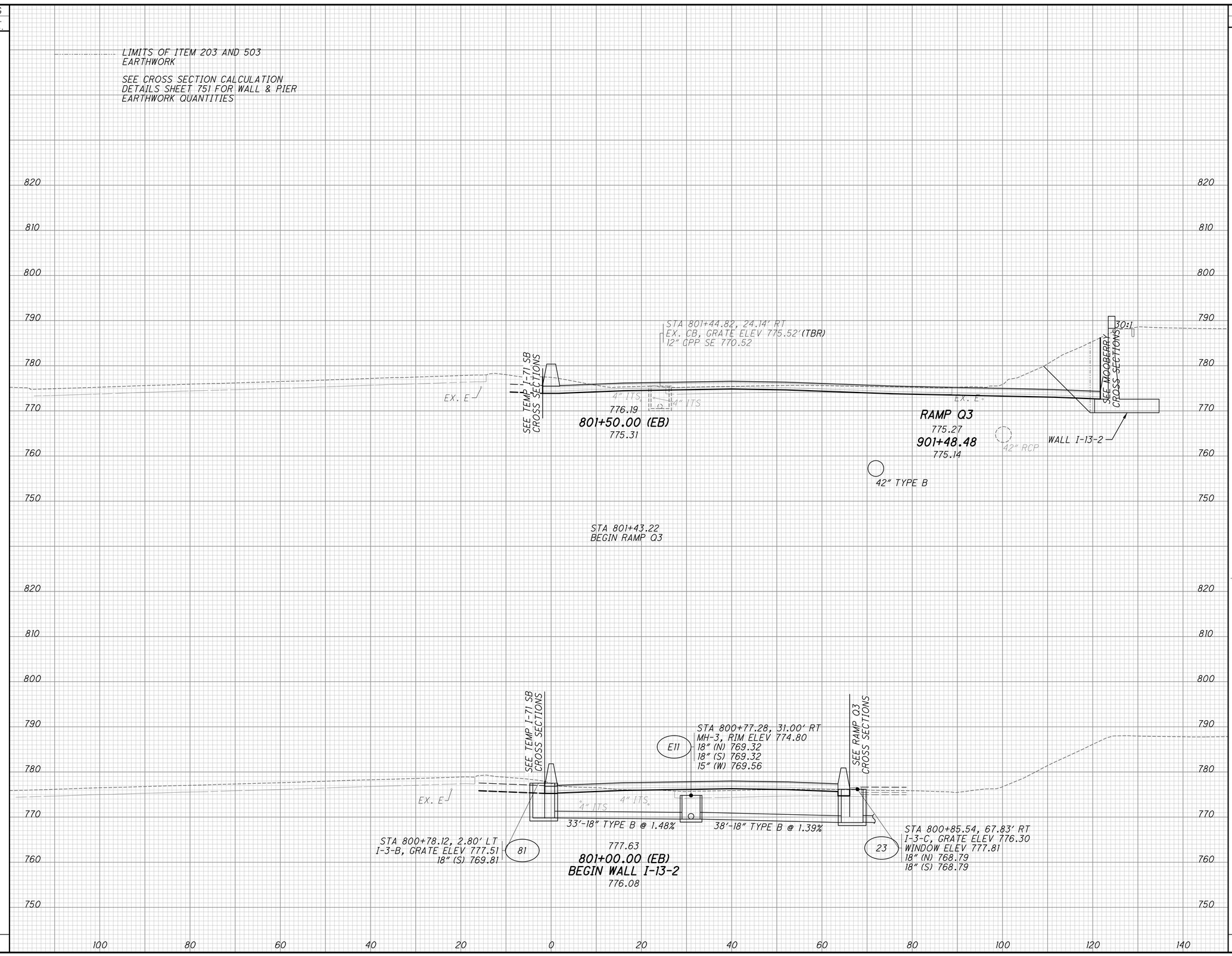

SEEDING END WIDTH	SEEDING SQ. YDS.	END AREA CUT	END AREA FILL	VOLUME CUT	VOLUME FILL
0		314	32		
	0				
0				79	8
	0	314	32	AH	
		78	59	BK	
				125	95
0		78	59		
	0			101	77
	0			305	180

CALCULATED MAH
CHECKED BSB

CROSS SECTIONS IR-70
STA. 801+00.00 TO STA. 801+50.00

FRA-70-14.54

795
2317

PLOT.CEL

ms consultants, inc.
msconsultants.com

www.msconsultants.com

Ohio DOT Workspace
70\71 East Interchange 2E

Batchplot Spec: \\msconsultants.com\files\production\03\60\06634_2E\standards\plotdrv\batchplt.spc
Pen Table: \\msconsultants.com\files\Standards\ustn\ohdot\V8i\ms\plotting\pen\V8i_ms_std.tbl
Plot Driver: \\msconsultants.com\files\Standards\ustn\ohdot\v8i\ms\plotting\PDF.pltcfg
PCF: ohdotV8i
PCF: 60-06634_2E_Columbus

34" x 22"

View: SHEET
By: jdouglas

Model: Sheet
Printed: 6/19/2018 @ 8:54:32 AM
File: N:\03\60\06634_2E\roadway\sheets\105322XS1116.dgn

ms consultants, inc.

PLOT.CEL

ms consultants, inc.
msconsultants.com

Ohio DOT Workspace
70\71 East Interchange 2E
www.msconsultants.com

1" 0 0.5"

Batchplot Spec: \\msconsultants.com\Files\production\03\60\06634.2E\standards\oldot\batchplt.SPC
Pen Table: \\msconsultants.com\Files\Standards\ustn\ohdot\V8\ms\plotting\pen\V8i_ms_std.tbl
Plot Driver: \\msconsultants.com\Files\Standards\ustn\ohdot\v8i\ms\plotting\PDF.pltcfg

34" x 22"

Model: Sheet
Printed: 6/19/2018 @ 8:54:33 AM
File: N:\03\60\06634.2E\roadway\sheets\105222XS117.dgn
View: SHEET
By: jdouglas

SEEDING	
END WIDTH	SQ. YDS.
0	0
0	0
0	0
0	0

LIMITS OF ITEM 203 AND 503 EARTHWORK

SEE CROSS SECTION CALCULATION DETAILS SHEET 751 FOR WALL & PIER EARTHWORK QUANTITIES

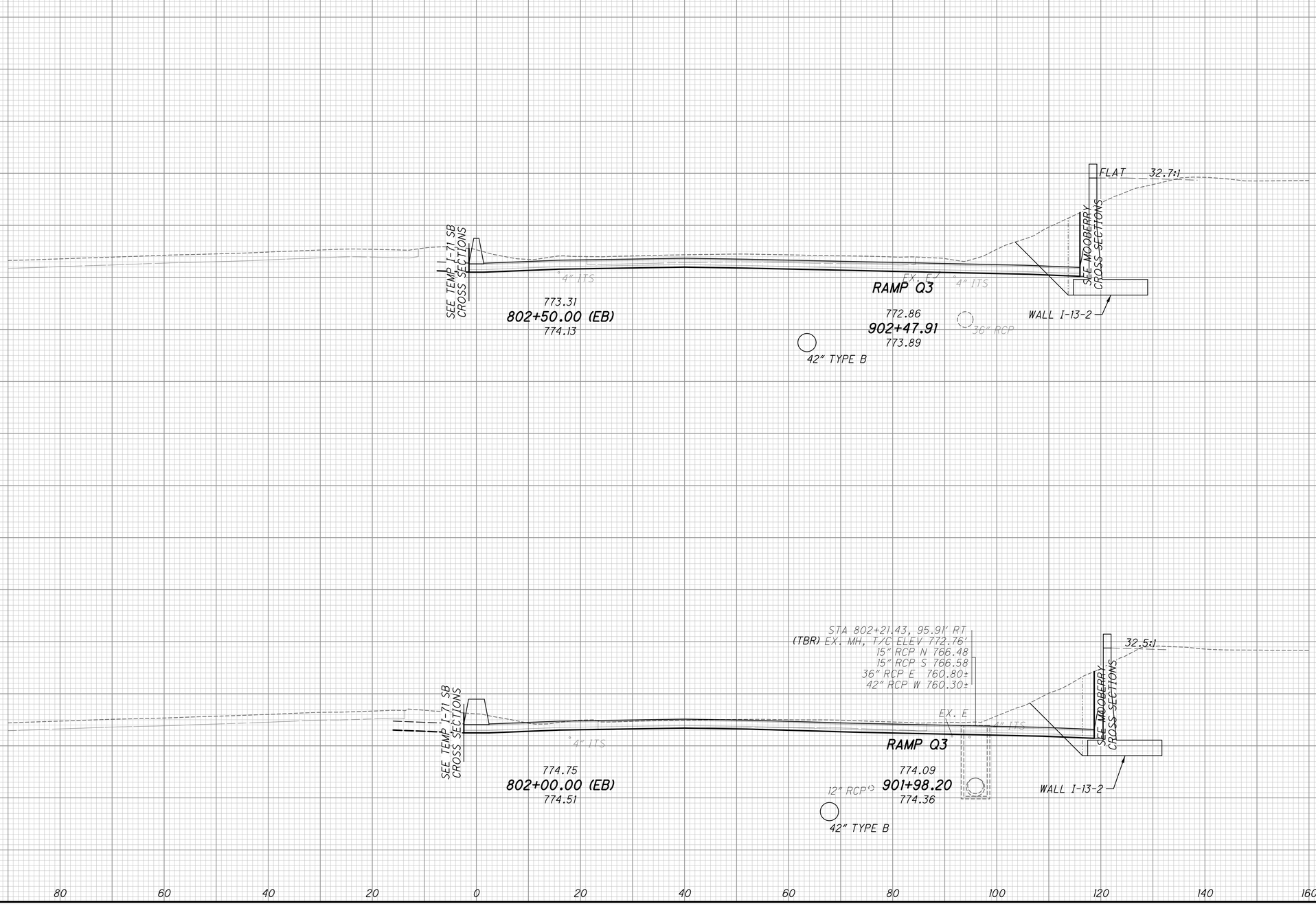

END AREA		VOLUME	
CUT	FILL	CUT	FILL
384	7		
		667	13
336	7		
		602	36
		1269	49

CALCULATED MAH
CHECKED BSB

CROSS SECTIONS IR-70
STA. 802+00.00 TO STA. 802+50.00

FRA-70-14.54

796
2317

ms consultants, inc.

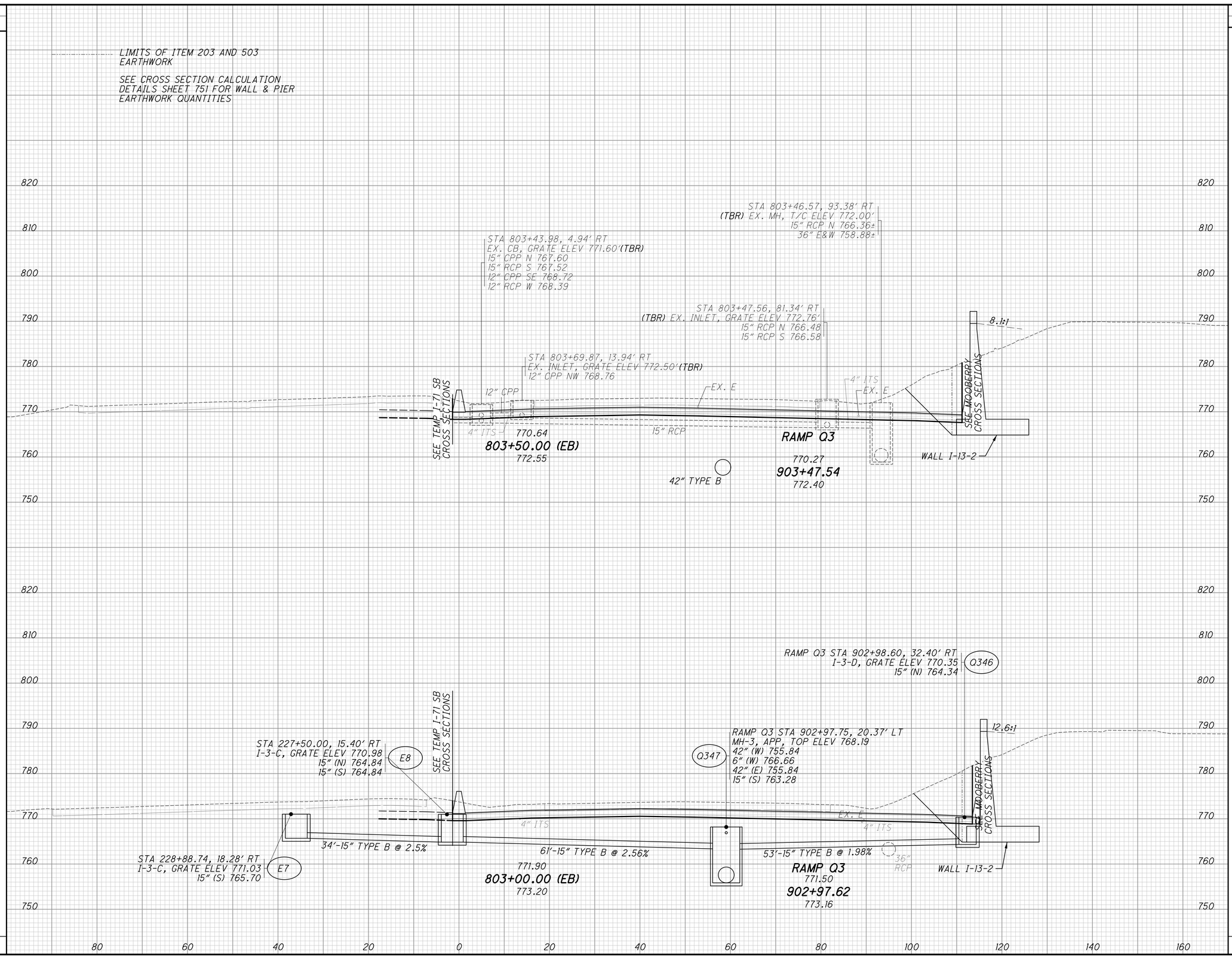

END AREA CUT	END AREA FILL	VOLUME CUT	VOLUME FILL
493	4		
		868	12
445	9		
		767	15
		1635	27

CALCULATED MAH
CHECKED BSB

CROSS SECTIONS IR-70
STA. 803+00.00 TO STA. 803+50.00

FRA-70-14.54

797
2317

PLOT.CEL
ms consultants, inc.
msconsultants.com
www.msconsultants.com
Ohio DOT Workspace
70\71 East Interchange 2E
Batchplot Spec: \\msconsultants.com\files\production\03\60\06634_2E\standards\plotdrv\batchplt.spc
Pen Table: \\msconsultants.com\files\Standards\ustn\ohdot\V8i\ms\plotting\pen\V8i_ms_std.tbl
Plot Driver: \\msconsultants.com\files\Standards\ustn\ohdot\v8i\ms\plotting\PDF.pltcfg
PCF: ohdotV8i
PCF: 60-06634_2E_Columbus
34" x 22"
Model: Sheet
Printed: 6/19/2018 @ 8:54:34 AM
File: N:\03\60\06634_2E\roadway\sheets\105322XS1118.dgn
View: SHEET
By: jdouglas
ms consultants, inc.

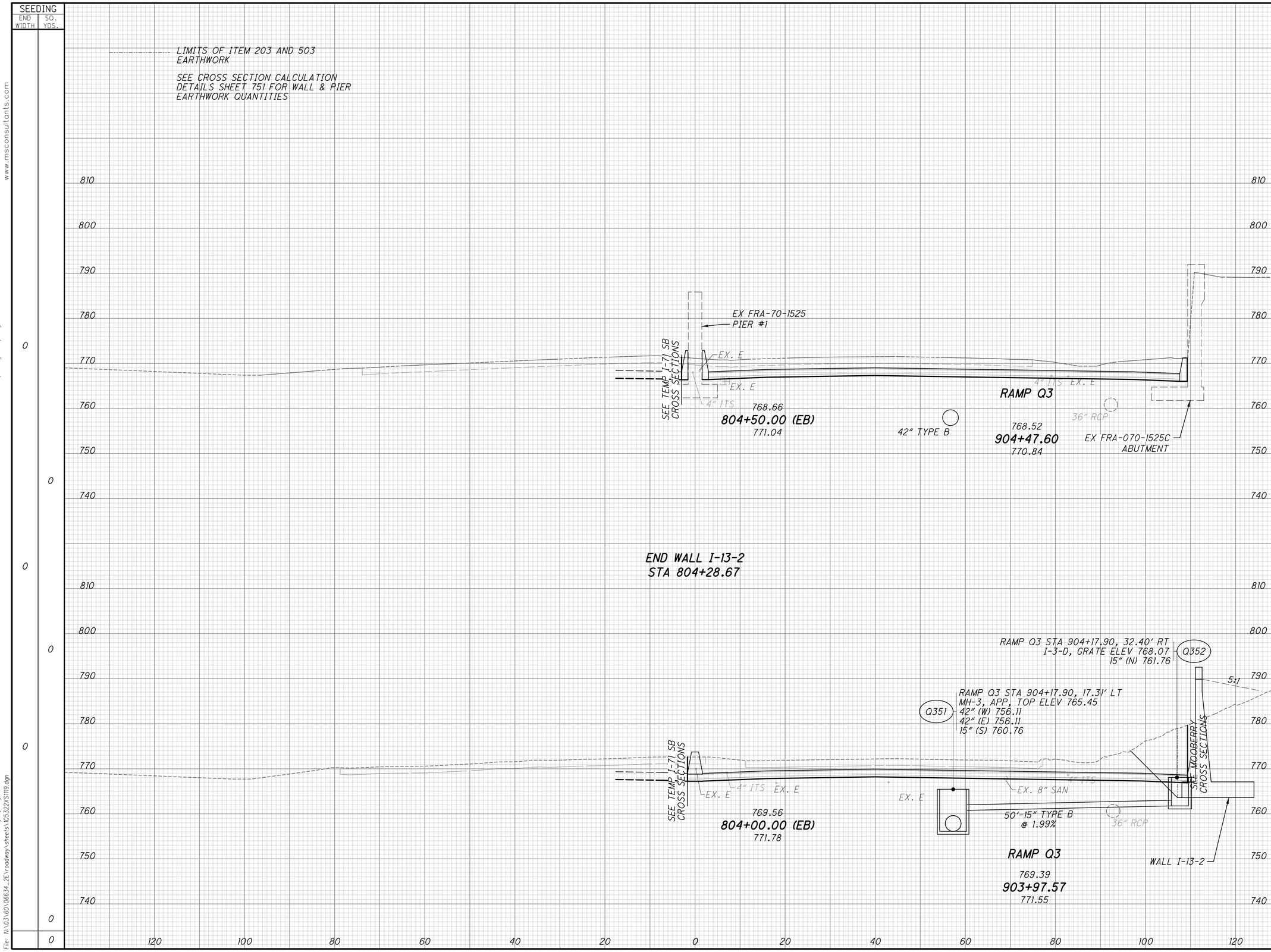

END AREA CUT	END AREA FILL	VOLUME CUT	VOLUME FILL
451	0		
		356	0
451	0	AH	
527	6	BK	
		560	6
527	6		
		944	9
		1860	15

CALCULATED MAH
CHECKED BSB

CROSS SECTIONS IR-70
STA. 804+00.00 TO STA. 804+50.00

FRA-70-14.54

798
2317

ms consultants, inc.

PLOT.CEL

ms consultants, inc.
msconsultants.com

Ohio DOT Workspace
70\71 East Interchange 2E
www.msconsultants.com

Batchplot Spec: \\msconsultants.com\files\production\03\60\06634_2E\standards\plotdrv\batchplt.spc
Pen Table: \\msconsultants.com\files\Standards\ustn\ohdot\V8i\ms\plotting\pen\V8i_ms_std.tbl
Plot Driver: \\msconsultants.com\files\Standards\ustn\ohdot\v8i\ms\plotting\PDF.pltcfg

34" x 22"

View: FENCE_VIEW1
By: jdouglas
Model: Sheet
Printed: 6/19/2018 @ 8:54:36 AM
File: N:\03\60\06634_2E\roadway\sheets\105322XS1119.dgn

PLOT.CEL

ms consultants, inc.
msconsultants.com

Ohio DOT Workspace
70\71 East Interchange 2E
www.msconsultants.com

Batchplot Spec: \\msconsultants.com\files\production\03\60\06634_2E\standards\plotdrv\batchplt.spc
Pen Table: \\msconsultants.com\files\Standards\ustn\ohdot\V8i\ms\plotting\pen\V8i_ms_std.tbl
Plot Driver: \\msconsultants.com\files\Standards\ustn\ohdot\v8i\ms\plotting\PDF.pltcfg

34" x 22"

Model: Sheet
Printed: 6/19/2018 @ 8:54:37 AM
File: N:\03\60\06634_2E\roadway\sheets\105322XS1120.dgn
View: FENCE_VIEW1
By: jdouglas

SEEDING END WIDTH	SEEDING SQ. YDS.	END AREA CUT	END AREA FILL	VOLUME CUT	VOLUME FILL
0		432	0		
	0			794	0
0		426	0		
	0			812	0
	0			1606	0

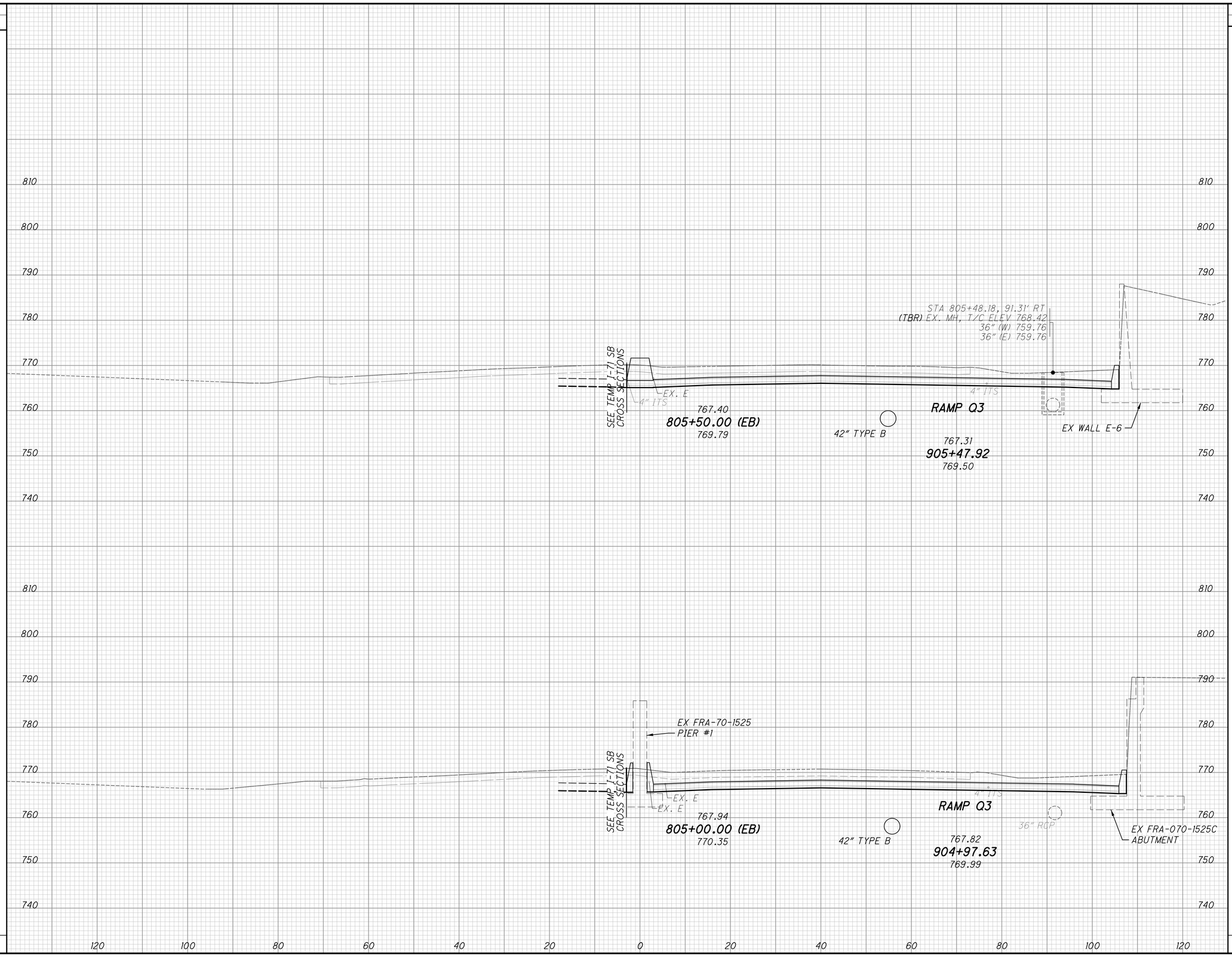

CALCULATED MAH
CHECKED BSB

CROSS SECTIONS IR-70
STA. 805+00.00 TO STA. 805+50.00

FRA-70-14.54

ms consultants, inc.

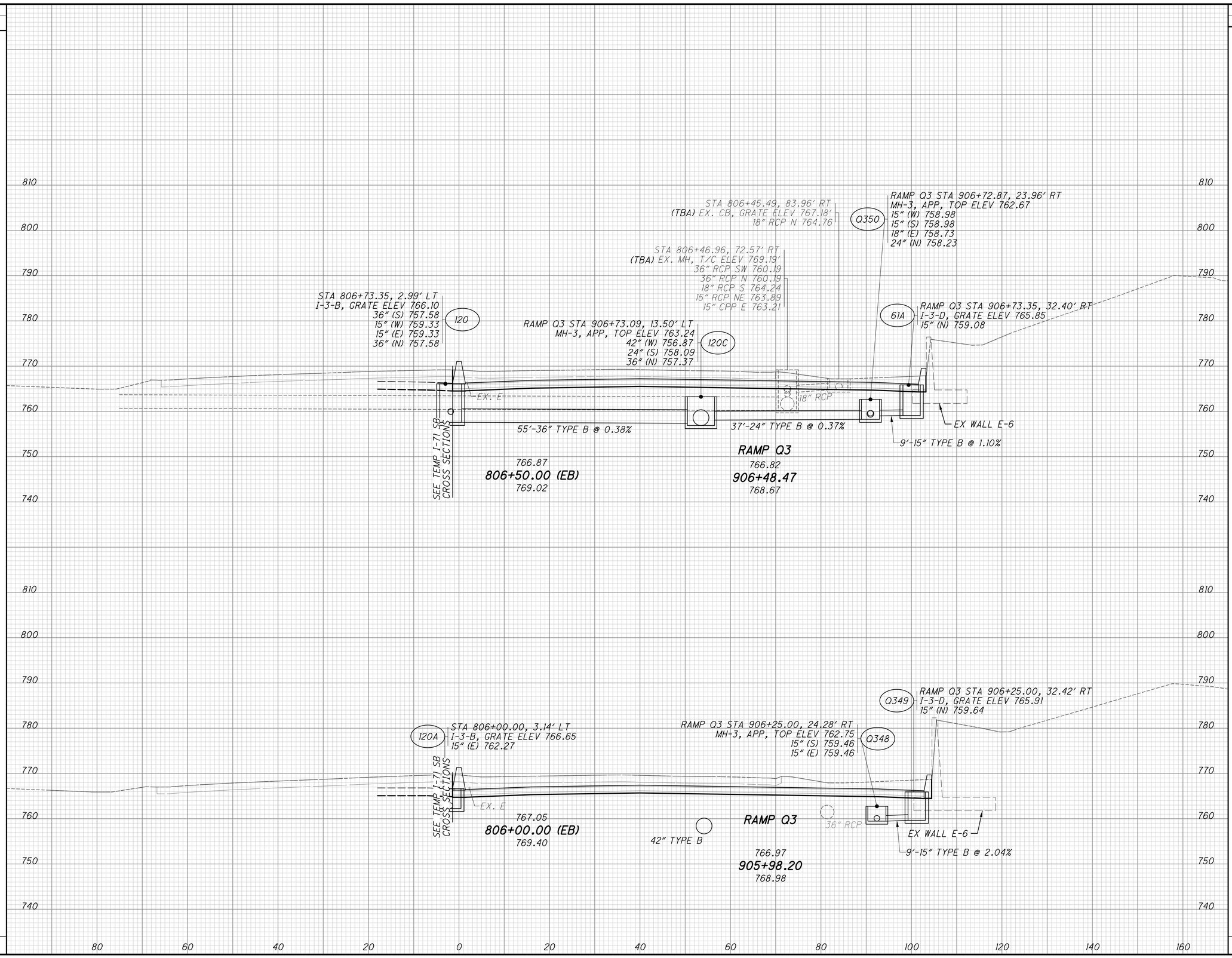

END AREA CUT	END AREA FILL	VOLUME CUT	VOLUME FILL
371	1		
		772	0
409	0		
		778	0
		1550	0

CALCULATED MAH
CHECKED BSB

CROSS SECTIONS IR-70
STA. 806+00.00 TO STA. 806+50.00

FRA-70-14.54

800
2317

ms consultants, inc.

PLOT.CEL

ms consultants, inc.
msconsultants.com

Ohio DOT Workspace
70\71 East Interchange 2E
www.msconsultants.com

Batchplot Spec: \\msconsultants.com\files\production\03\60\06634_2E\standards\plotdrv\batchplt.spc
Pen Table: \\msconsultants.com\files\Standards\ustn\ohdot\V8i\ms\plotting\pen\V8i_ms_std.tbl
Plot Driver: \\msconsultants.com\files\Standards\ustn\ohdot\v8i\ms\plotting\PDF.pltcfg

34" x 22"

View: SHEET
By: jdouglas
Model: Sheet
Printed: 6/19/2018 @ 8:54:38 AM
File: N:\03\60\06634_2E\roadway\sheets\105322XS1121.dgn

PLOT.CEL

ms consultants, inc.
msconsultants.com

Ohio DOT Workspace
70\71 East Interchange 2E

www.msconsultants.com

0 1" 0.5"

Batchplot Spec: \\msconsultants.com\Files\production\Q3\60\06634.2E\standards\plotdrv\batchplt.SPC
Pen Table: \\msconsultants.com\Files\Standards\ustn\ohdot\V8\ms\plotting\pen\V8i_ms_std.TBL
Plot Driver: \\msconsultants.com\Files\Standards\ustn\ohdot\v8i\ms\plotting\PDF.pltcfg
PDF: ohdotV8i
DGN: 60-06634_2E_Columbus

34" x 22"

Model: Sheet
Printed: 6/19/2018 @ 8:54:40 AM
File: N:\03\60\06634.2E\roadway\sheets\1053221X1122.dgn
View: SHEET
By: jdouglas

SEEDING	
END WIDTH	SQ. YDS.
64	125
0	0
	125

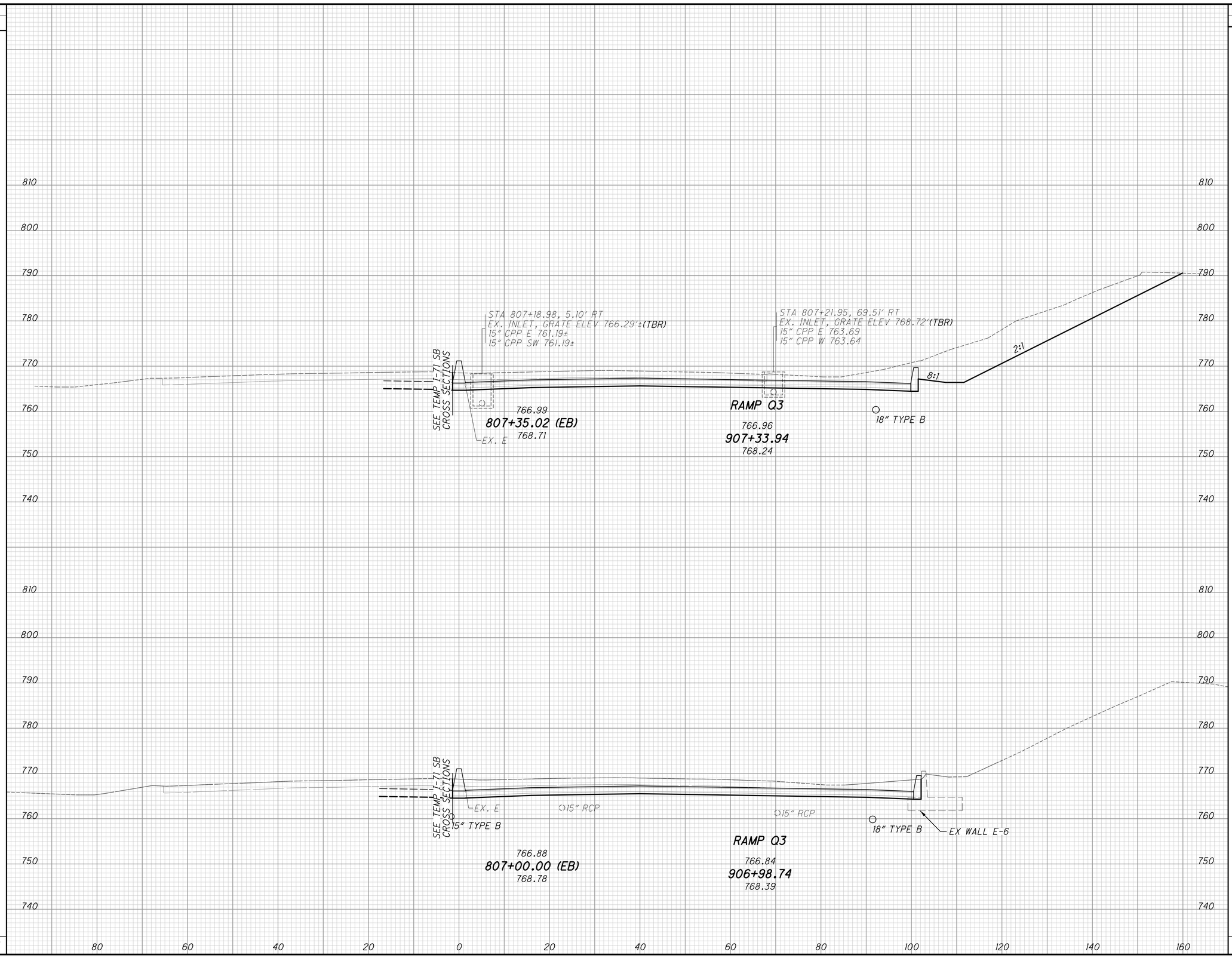

END AREA	
CUT	FILL
694	0
357	0

VOLUME	
CUT	FILL
682	0
674	0
1356	0

CALCULATED MAH
CHECKED BSB

CROSS SECTIONS IR-70
STA. 807+00.00 TO STA. 807+35.02

FRA-70-14.54

801
2317

PLOT.CEL

ms consultants, inc.
msconsultants.com

Ohio DOT Workspace
70\71 East Interchange 2E
PCF: 60-06634_2E_Columbus
PCF: ohdot\V8i
PCF: ohdot\V8i

www.msconsultants.com

Batchplot Spec: \\msconsultants.com\files\production\03\60\06634_2E\standards\plotdrv\batchplt.spc
Pen Table: \\msconsultants.com\files\Standards\ustn\ohdot\V8i\ms\plotting\pen\V8i_ms_std.tbl
Plot Driver: \\msconsultants.com\files\Standards\ustn\ohdot\v8i\ms\plotting\PDF.pltcfg

34" x 22"

Model: XS_SHEET_207+35.02_TO_208+00.00 By: SHEET
Printed: 6/19/2018 @ 8:54:41 AM By: jdouglas
File: N:\03\60\06634_2E\roadway\sheets\105322TXS108.dgn

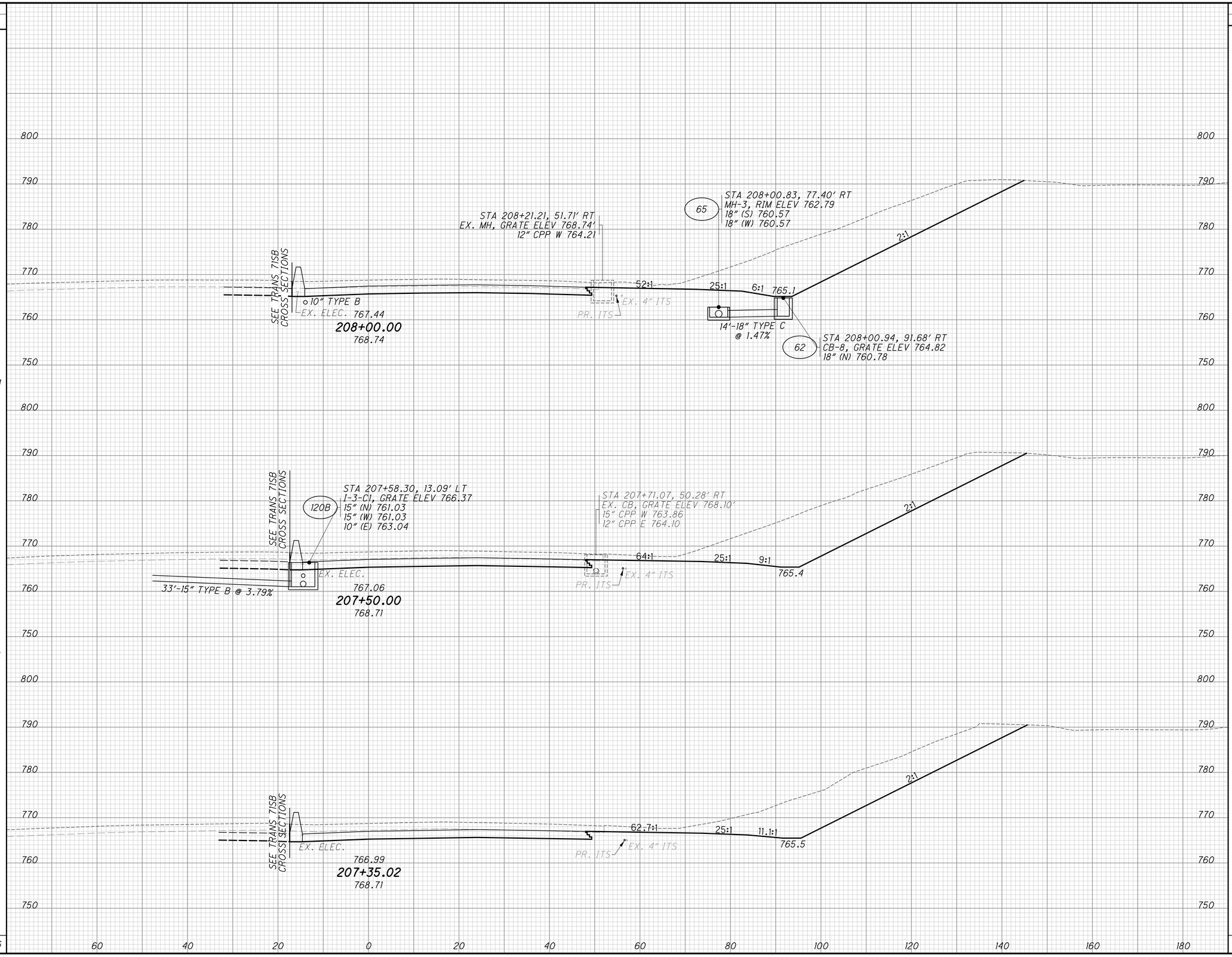

END AREA CUT	END AREA FILL	VOLUME CUT	VOLUME FILL
756	2		
		1434	3
792	2		
		411	1
689	2	0	0
		1845	4

CALCULATED

CHECKED

CROSS SECTIONS TRANS I-70 EB (EAST SIDE)
STA. 207+35.02 TO STA. 208+00.00

FRA-70-14.54

802
2317

ms consultants, inc.

34" x 22"

Model: XS_SHEET_208+50.00_TO_209+50.00 Sheet: SHEET
Printed: 6/19/2018 @ 8:54:42 AM By: jdouglas
File: N:\03\60\06634_2E\roadway\sheets\105322TXS108.dgn

Batchplot Spec: \\msconsultants.com\files\production\03\60\06634_2E\standards\plotdrv\batchplt.spc
Pen Table: \\msconsultants.com\files\Standards\ustn\ohdot\V8i\ms\plotting\pen\V8i_ms_std.tbl
Plot Driver: \\msconsultants.com\files\Standards\ustn\ohdot\v8i\ms\plotting\PDF.pltcfg

PCF: ohdotV8i
PCF: 60-06634_2E_Columbus

Ohio DOT Workspace
70\71 East Interchange 2E

ms consultants, inc.
msconsultants.com

PLOT.CEL

www.msconsultants.com

SEEDING

STA.	END WIDTH	SQ. YDS.
1673	569	102
	559	99
	545	97

SEE TRANS 71SB CROSS SECTIONS

208+50.00
768.94
EX. ELEC. 767.90
010" TYPE B
PR. ITS
EX. 4" ITS
43:1
25:1
6:1
765.3
2:1

SEE TRANS 71SB CROSS SECTIONS

209+00.00
769.18
768.37
768.0
EX. ELEC.
PR. ITS
EX. 4" ITS
35:1
25:1
7:1
765.7
2:1

SEE TRANS 71SB CROSS SECTIONS

209+50.00
769.36
768.83
768.5
EX. ELEC.
PR. ITS
EX. 4" ITS
25:1
8:1
766.1
2:1

END AREA	STA.	
CUT	743	663	632
FILL	1	1	1

VOLUME	STA.	
CUT	3889	1388	1302	1199
FILL	7	3	2	2

ms consultants, inc.

803
2317

FRA-70-14.54

CROSS SECTIONS TRANS I-70 EB (EAST SIDE)
STA. 208+50.00 TO STA. 209+50.00

CALCULATED

CHECKED

34" x 22"

Model: XS_SHEET_210+00.00_TO_211+00.00 View: SHEET
Printed: 6/19/2018 @ 8:54:43 AM By: jdouglas
File: N:\03\60\06634_2E\roadway\sheets\105322TXS108.dgn

Batchplot Spec: \\msconsultants.com\files\production\03\60\06634_2E\standards\plotdrv\batchplt.spc
Pen Table: \\msconsultants.com\files\Standards\ustn\ohdot\V8i\ms\plotting\pen\V8i_ms_std.tbl
Plot Driver: \\msconsultants.com\files\Standards\ustn\ohdot\v8i\ms\plotting\PDF.pltcfg

0 0.5" 1"

DGN: ohdotV8i
PCF: 60-06634_2E_Columbus

Ohio DOT Workspace
70\71 East Interchange 2E

PLOT.CEL

ms consultants, inc.
msconsultants.com

www.msconsultants.com

SEEDING

	END WIDTH	SQ. YDS.
94	531	1497
91	515	
71	451	

EX. ELEC.

SEE TRANS 71SB CROSS SECTIONS

210+00.00
769.62
769.30
769.0

23:1
8:1
766.4
2:1

210+50.00
769.89
769.77
769.5

20:1
8:1
766.9
2:1

211+00.00
770.16
770.23
770.0

19:1
8:1
767.4
2.7:1

	END AREA CUT	END AREA FILL	VOLUME CUT	VOLUME FILL
94	554	2	1098	3
91	469	3	947	4
71	662	7	1047	9
			3092	16

804
2317

FRA-70-14.54

CROSS SECTIONS TRANS I-70 EB (EAST SIDE)
STA. 210+00.00 TO STA. 211+00.00

CALCULATED

CHECKED

ms consultants, inc.

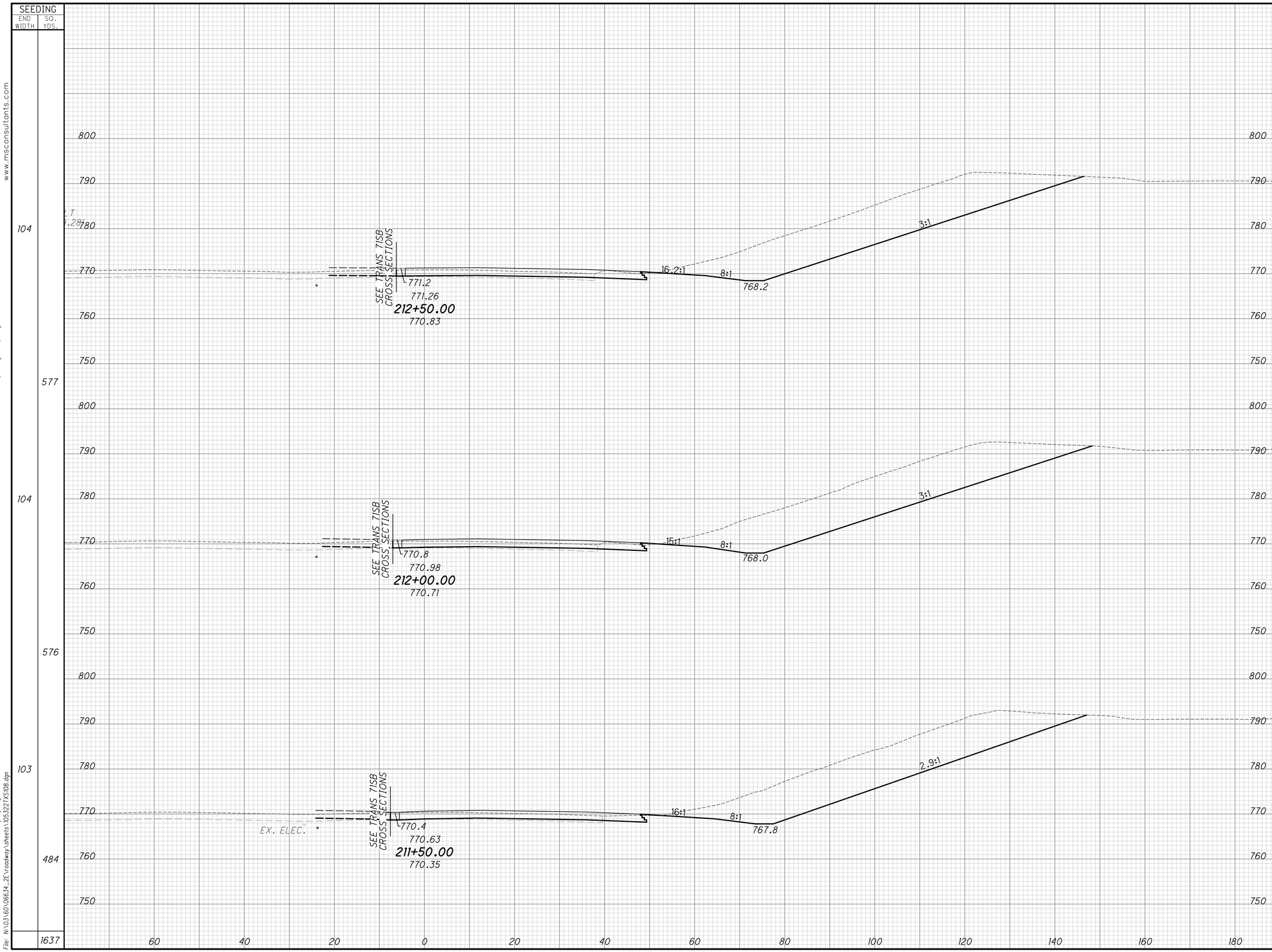

END AREA CUT	END AREA FILL	VOLUME CUT	VOLUME FILL
689	18		
		1298	32
713	17		
		1290	29
680	14		
		1242	20
		3830	81

CALCULATED

CHECKED

CROSS SECTIONS TRANS I-70 EB (EAST SIDE)
STA. 211+50.00 TO STA. 212+50.00

FRA-70-14.54

805
2317

ms consultants, inc.

PLOT.CEL

ms consultants, inc.
msconsultants.com

Ohio DOT Workspace
70\71 East Interchange 2E
www.msconsultants.com

Batchplot Spec: \\msconsultants.com\files\production\03\60\06634_2E\standards\plotdrv\batchplt.spc
Pen Table: \\msconsultants.com\files\Standards\ustn\ohdot\V8i\ms\plotting\pen\V8i_ms_std.tbl
Plot Driver: \\msconsultants.com\files\Standards\ustn\ohdot\v8i\ms\plotting\PDF.pltcfg

34" x 22"

Model: XS_SHEET_211+50.00_TO_212+50.00
Printed: 6/19/2018 @ 8:54:43 AM
File: N:\03\60\06634_2E\roadway\sheets\105322TXS108.dgn
Dev: SHEET
By: jdouglas

PLOT.CEL

ms consultants, inc.
msconsultants.com

www.msconsultants.com

Ohio DOT Workspace
70\71 East Interchange 2E

Batchplot Spec: \\msconsultants.com\files\production\03\60\06634_2E\standards\plotdrv\batchplt.SPC
Pen Table: \\msconsultants.com\files\Standards\ustn\ohdot\V8\ms\plotting\pen\V8i_ms_std.TBL
Plot Driver: \\msconsultants.com\files\Standards\ustn\ohdot\V8\ms\plotting\PDF.pltcfg

PDF: ohdotV8i
PDF: 60-06634_2E_Columbus

34" x 22"

Model: XS_SHEET_213+00.00_TO_214+00.00
Printed: 6/19/2018 @ 8:54:44 AM
File: N:\03\60\06634_2E\roadway\sheets\105322\XS108.dgn

Dgn: SHEET
By: jdouglas

SEEDING END WIDTH	SEEDING SQ. YDS.
89	99
89	405
93	526
96	555
	1585

SEE TRANS 71SB CROSS SECTIONS

771.75
214+00.00
771.48

STA 213+90.00
END FULL-DEPTH
BEGIN OVERLAY

SEE TRANS 71SB CROSS SECTIONS

771.65
213+50.00
771.29

SEE TRANS 71SB CROSS SECTIONS

771.48
213+00.00
771.11

800 790 780 770 760 750

10:1 3:1 769.2

10:1 3:1 769.0

15:1 8:1 3:1 768.8

60 40 20 0 20 40 60 80 100 120 140 160 180

END AREA CUT	END AREA FILL	VOLUME CUT	VOLUME FILL
390	1		
		144	1
390	1	AH	
452	2	BK	
		732	10
536	10		
		1033	24
579	16		
		1174	31
		3083	66

CALCULATED

CHECKED

CROSS SECTIONS TRANS I-70 EB (EAST SIDE)
STA. 213+00.00 TO STA. 214+00.00

FRA-70-14.54

806
2317

ms consultants, inc.

34" x 22"

Model: XS_SHEET_214+50.00_TO_215+50.00 View: SHEET
Printed: 6/19/2018 @ 8:54:46 AM By: jdouglas
File: N:\03\60\06634_2E\roadway\sheets\105322TXS108.dgn

Batchplot Spec: \\msconsultants.com\files\production\03\60\06634_2E\standards\plotdrv\batchplt.spc
Pen Table: \\msconsultants.com\files\Standards\ustn\ohdot\V8i\ms\plotting\pen\V8i_ms_std.tbl
Plot Driver: \\msconsultants.com\files\Standards\ustn\ohdot\v8i\ms\plotting\PDF.pltcfg

0 1" 0.5"

ODF: ohdotV8i
PCF: 60-06634_2E_Columbus

Ohio DOT Workspace
70\71 East Interchange 2E

PLOT.CEL

ms consultants, inc.
msconsultants.com

www.msconsultants.com

SEEDING

END WIDTH	SQ. YDS.
1434	

	86	85	84
	486	477	471

SEE TRANS 71SB CROSS SECTIONS

214+50.00
771.79
771.66
10:1
769.4
3:1

SEE TRANS 71SB CROSS SECTIONS

215+00.00
771.77
771.69
12:1
769.6
3:1

SEE TRANS 71SB CROSS SECTIONS

215+50.00
771.69
771.68
15:1
769.8
3:1

END AREA	86	85	84
CUT	298	267	203
FILL	1	1	1

VOLUME			
CUT	1597	524	436
FILL	6	2	2

807
2317

FRA-70-14.54

CROSS SECTIONS TRANS I-70 EB (EAST SIDE)
STA. 214+50.00 TO STA. 215+50.00

CALCULATED

CHECKED

ms consultants, inc.

34" x 22"

Model: XS_SHEET_216+00.00_TO_217+00.00 View: SHEET
Printed: 6/19/2018 @ 8:54:47 AM By: jdouglas
File: N:\03\60\06634_2E\roadway\sheets\105322TXS108.dgn

Batchplot Spec: \\msconsultants.com\files\production\03\60\06634_2E\standards\plotdrv\batchplt.spc
Pen Table: \\msconsultants.com\files\Standards\ustn\ohdot\V8i\ms\plotting\pen\V8i_ms_std.tbl
Plot Driver: \\msconsultants.com\files\Standards\ustn\ohdot\v8i\ms\plotting\PDF.pltcfg

PDF: ohdotV8i
PCF: 60-06634_2E_Columbus

0 1" 0.5"

Ohio DOT Workspace
70\71 East Interchange 2E

PLOT.CEL

ms consultants, inc.
msconsultants.com

www.msconsultants.com

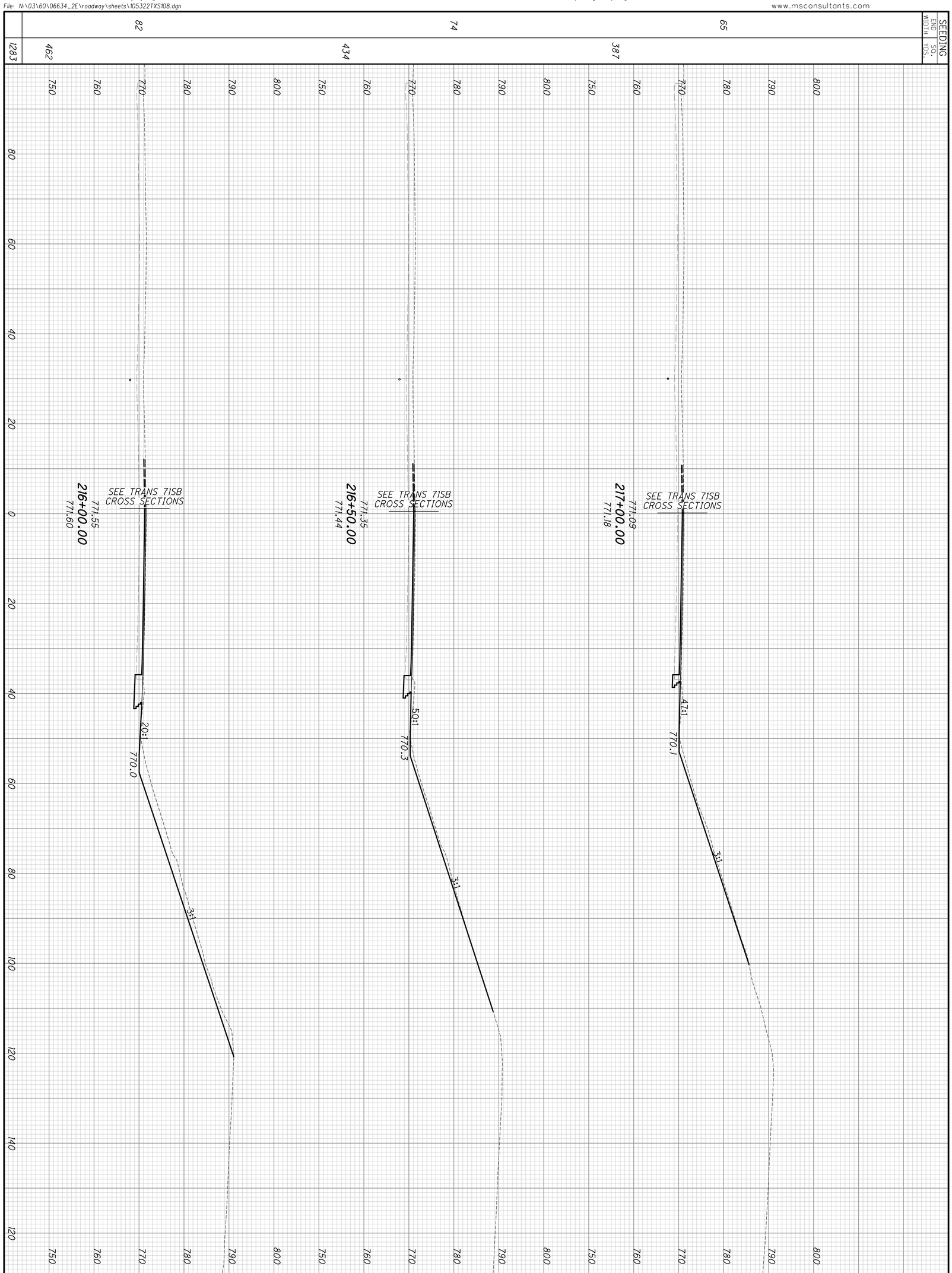

808
2317

FRA-70-14.54

CROSS SECTIONS TRANS I-70 EB (EAST SIDE)
STA. 216+00.00 TO STA. 217+00.00

CALCULATED

CHECKED

ms consultants, inc.

PLOT.CEL

ms consultants, inc.
msconsultants.com

www.msconsultants.com

Ohio DOT Workspace
70\71 East Interchange 2E

0 1" 0.5"

Batchplot Spec: \\msconsultants.com\files\production\03\60\06634_2E\standards\plotdrv\batchplt.SBC
Pen Table: \\msconsultants.com\files\Standards\ustn\ohdot\V8i\ms\plotting\pen\V8i_ms_std.tbl
Plot Driver: \\msconsultants.com\files\Standards\ustn\ohdot\V8i\ms\plotting\PDF.pltcfg

Model: XS_SHEET_217+50.00_TO_218+50.00
Printed: 6/19/2018 @ 8:54:48 AM By: jdouglas
File: N:\03\60\06634_2E\roadway\sheets\V05227XS108.dgn

34" x 22"

SEEDING	
END WIDTH	SQ. YDS.
38	236
47	224
56	67
56	337
	864

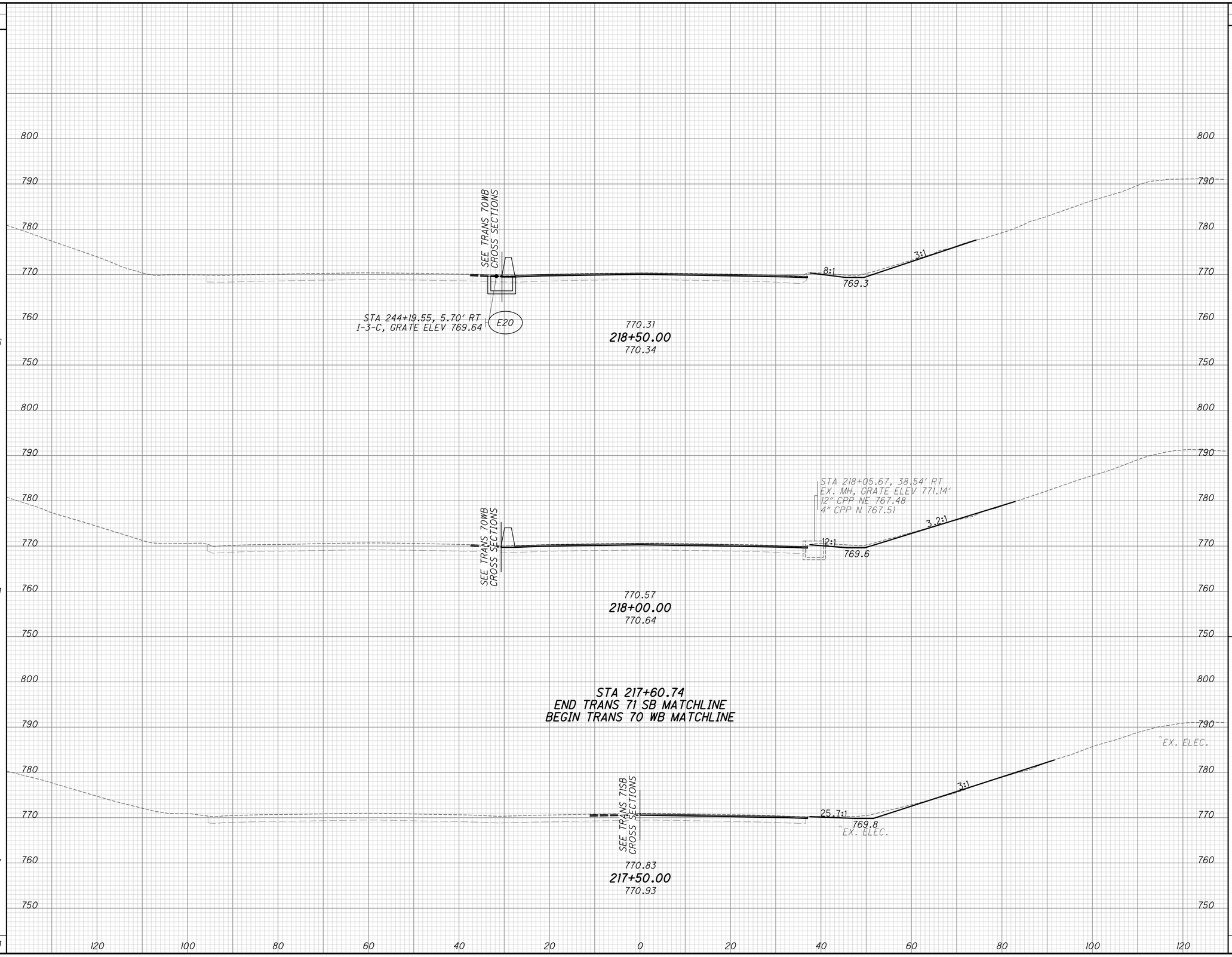

END AREA		VOLUME	
CUT	FILL	CUT	FILL
12	0		
		21	2
11	2		
		16	4
11	3	AH	
11	3	BK	
		4	1
11	3		
		37	4
		78	11

CALCULATED

CHECKED

CROSS SECTIONS TRANS I-70 EB (EAST SIDE)
STA. 217+50.00 TO STA. 218+50.00

FRA-70-14.54

809
2317

ms consultants, inc.

PLOT.CEL

ms consultants, inc.
msconsultants.com

Ohio DOT Workspace
70\71 East Interchange 2E
www.msconsultants.com

Batchplot Spec: \\msconsultants.com\files\production\03\60\06634_2E\standards\plotdrv\batchplt.spc
Pen Table: \\msconsultants.com\files\Standards\ustn\ohdot\V8i\ms\plotting\pen\V8i_ms_std.tbl PCF: ohdotV8i
Plot Driver: \\msconsultants.com\files\Standards\ustn\ohdot\v8i\ms\plotting\PDF.pltcfg PCF: 60-06634_2E_Columbus

34" x 22"

Model: XS_SHEET_218+86.84 View: SHEET
Printed: 6/19/2018 @ 8:54:49 AM By: jdouglas
File: N:\03\60\06634_2E\roadway\sheets\105322TXS108.dgn

SEEDING	
END WIDTH	SQ. YDS.
0	
	78
	78

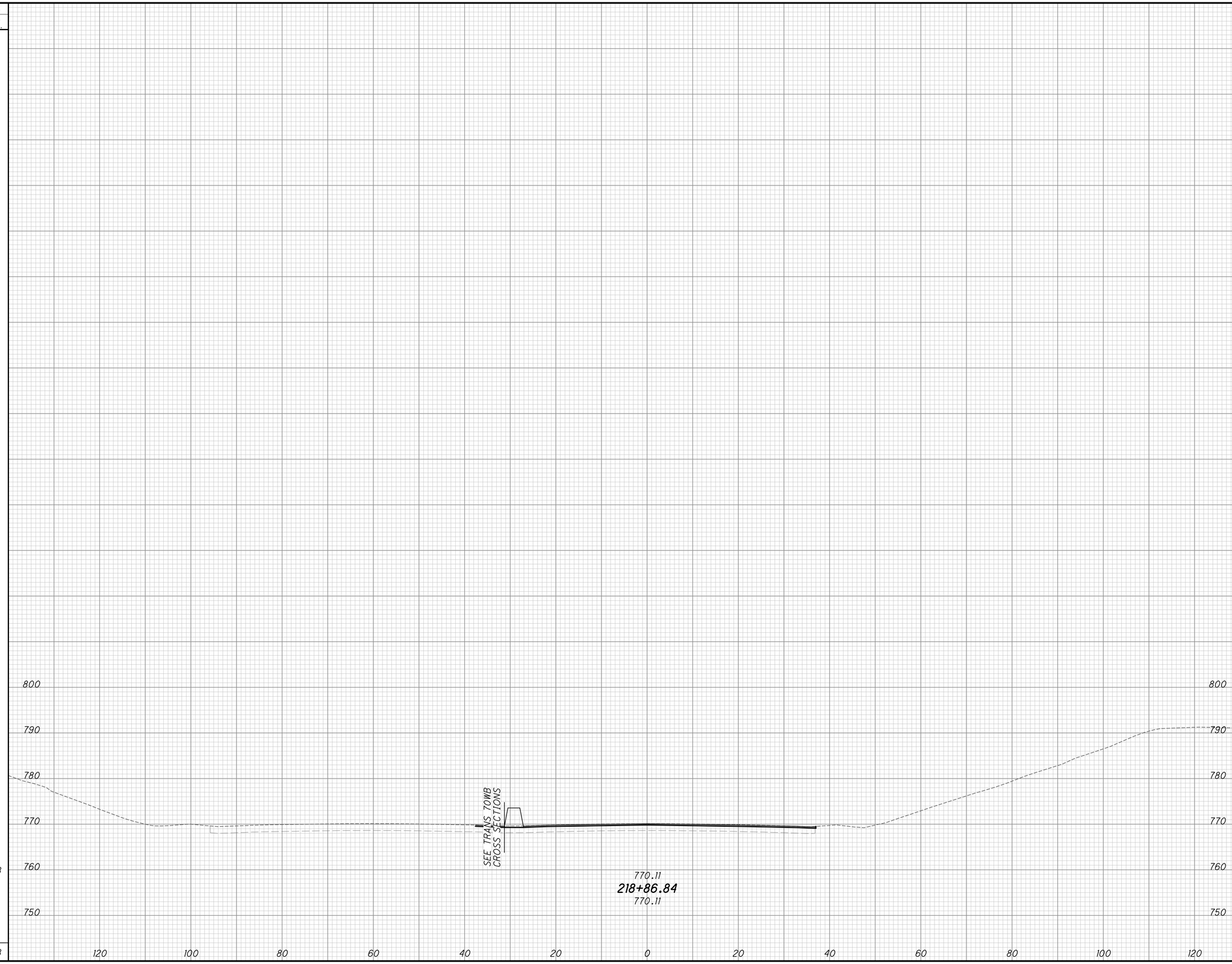

END AREA		VOLUME	
CUT	FILL	CUT	FILL
0	0		
		8	0
		8	0

CALCULATED

CHECKED

CROSS SECTIONS TRANS I-70 EB (EAST SIDE)

STA. 218+86.84

FRA-70-14.54

810
2317

ms consultants, inc.

PLOT.CEL

ms consultants, inc.
msconsultants.com

Ohio DOT Workspace
70\71 East Interchange 2E

0 1" 0.5"

PDF: ohdot\V8i
PDF: 60-06634_2E_Columbus

Batchplot Spec: \\msconsultants.com\files\production\03\60\06634_2E\standards\plotdr\batchplt.spc
Pen Table: \\msconsultants.com\files\Standards\usth\ohdot\V8i\ms\plotting\pen\V8i_ms_std.tbl
Plot Driver: \\msconsultants.com\files\Standards\usth\ohdot\v8i\ms\plotting\PDF.pltcfg

www.msconsultants.com

34" x 22"

Model: XS_SHEET_temporary_model_name&dir=FENCE_VIEW1
Printed: 6/19/2018 @ 12:08:34 PM By: dholl
File: \\msconsultants.com\files\Production\03\60\06634_2E\roadway\sheets\Sheets from 2LMN\77370_XS001(2LMN).dgn

SEEDING		END AREA		VOLUME	
END WIDTH	SQ. YDS.	CUT	FILL	CUT	FILL
24		65	23		
	127				
				129	51
25	0	86	36	0	0
	127			129	51

CALCULATED JJR
CHECKED ALL

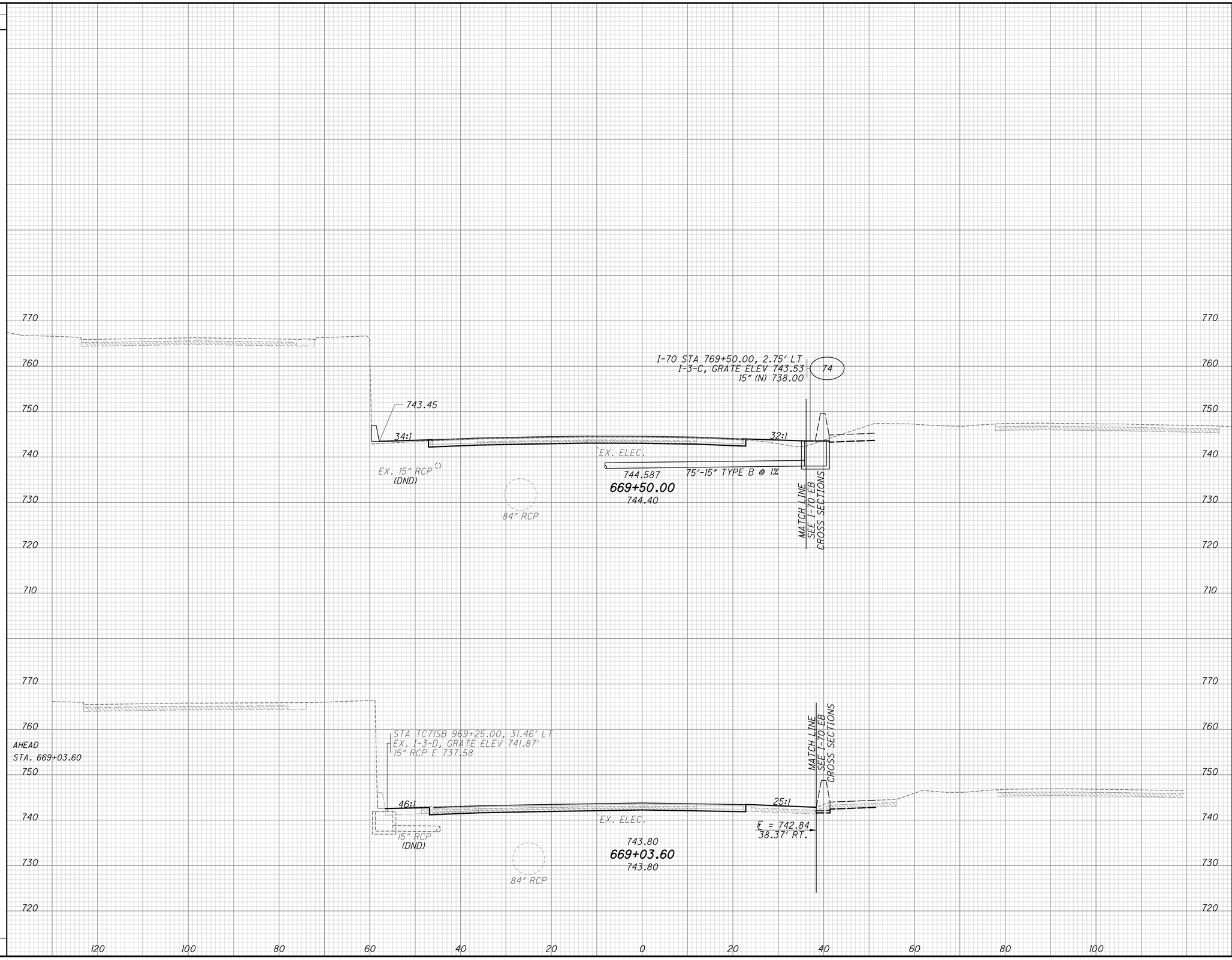

CROSS SECTIONS - TRANS I-70 W.B.
STA. 669+03.60 TO STA. 669+50.00

FRA-70-14.54

811
2317

ms consultants, inc.

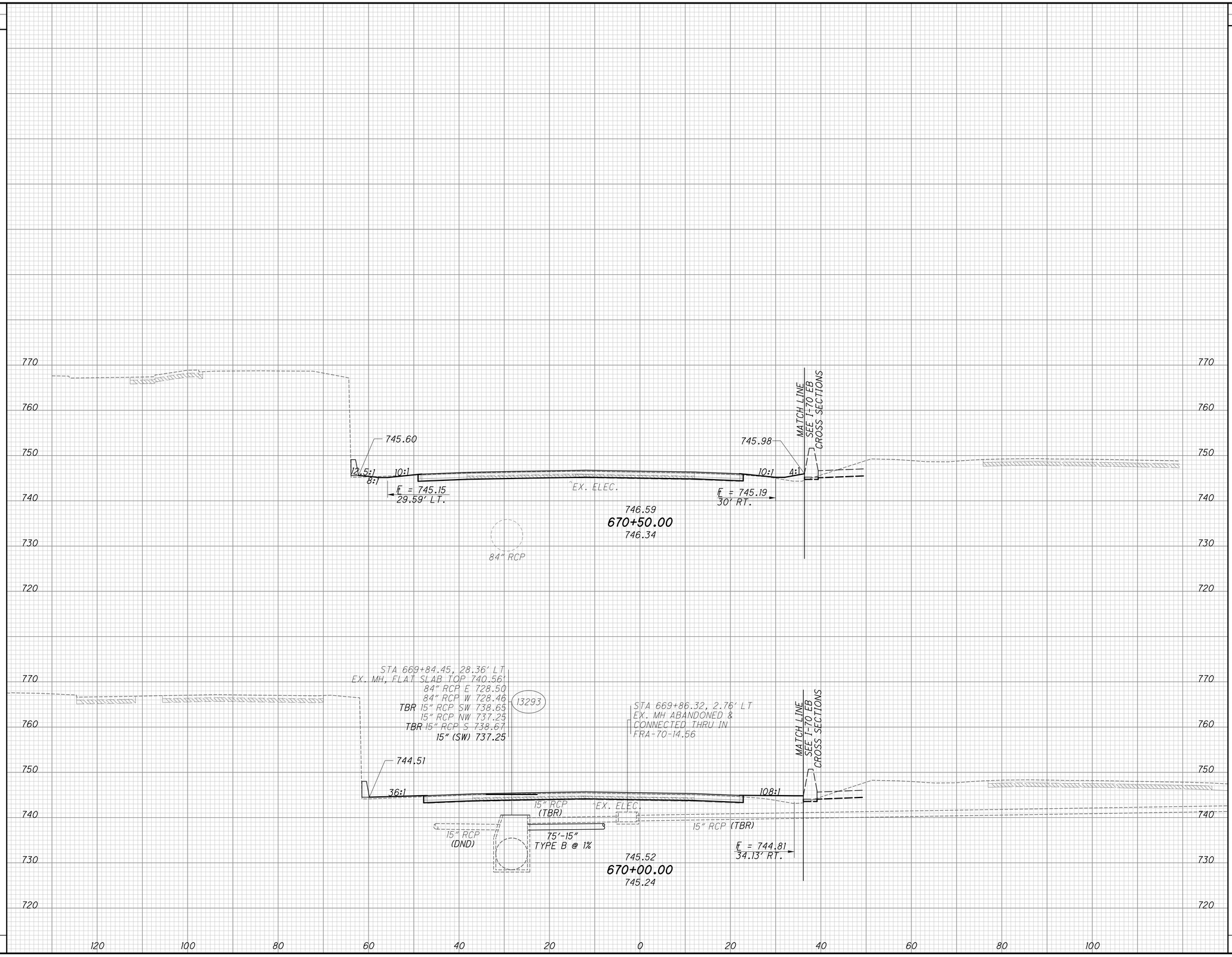

CALCULATED JJR
CHECKED ALL

CROSS SECTIONS - TRANS - I-70 W.B.
STA. 670+00.00 TO STA. 670+50.00

FRA-70-14.54

812
2317

ms consultants, inc.

PLOT.CEL

ms consultants, inc.
msconsultants.com

www.msconsultants.com

Ohio DOT Workspace
70\71 East Interchange 2E

Batchplot Spec: \\msconsultants.com\files\production\03\60\06634_2E\standards\plotdrv\batchplt.spc
Pen Table: \\msconsultants.com\files\Standards\ustn\ohdot\V8i\ms\plotting\pen\V8i_ms_std.tbl
Plot Driver: \\msconsultants.com\files\Standards\ustn\ohdot\v8i\ms\plotting\PDF.pltcfg

34" x 22"

Model: XS_SHEET_temporary_model_name
Printed: 6/19/2018 @ 12:09:29 PM By: dhall
File: \\msconsultants.com\files\Production\03\60\06634_2E\roadway\sheets\Sheets from 2LMN\77370_XS001(2LMN).dgn

PLOT.CEL

ms consultants, inc.
msconsultants.com

www.msconsultants.com

Ohio DOT Workspace
70\71 East Interchange 2E

0 0.5" 1"

34" x 22"

Batchplot Spec: \\msconsultants.com\files\production\03\60\06634_2E\standards\plotdr\batchplt.spc
Pen Table: \\msconsultants.com\files\Standards\usth\ohdot\V8i\ms\plotting\pen\V8i_ms_std.tbl PDF: ohdotV8i
Plot Driver: \\msconsultants.com\files\Standards\usth\ohdot\v8i\ms\plotting\PDF.pltcfg PCF: 60-06634_2E_Columbus

Model: XS_SHEET_temporary_model_name Use: FENCE_VIEW1
Printed: 6/19/2018 @ 12:10:19 PM By: dholl
File: \\msconsultants.com\files\Production\03\60\06634_2E\roadway\sheets\Sheets from 2LMN\77370_XS001(2LMN).dgn

SEEDING	
END WIDTH	SQ. YDS.
26	145
27	149
	294

END AREA	
CUT	FILL
72	28
69	19

VOLUME	
CUT	FILL
130	43
125	28
255	71

CALCULATED JJR
CHECKED ALL

780 770 760 750 740 730 720 790

748.50
12.5:1 4:1 9:1
℄ = 747.42
30.86' LT.

748.94
MATCH LINE
SEE I-70 EB
CROSS SECTIONS
10:1 4:1
℄ = 747.91
28.32' RT.

EX. ELEC.

749.13
671+50.00
748.74

84" RCP

STA 671+13.67, 112.85' LT
EX. SAN MH, GRATE ELEV 768.11'
48" BRICK W 756.83
48" BRICK E 756.83
15" CPP N 759.51

746.97
12.5:1 10:1
5:1
℄ = 746.26
30.33' LT.

747.37
MATCH LINE
SEE I-70 EB
CROSS SECTIONS
10:1 4:1
℄ = 746.50
29.00' RT.

EX. ELEC.

747.49
671+00.00
747.56

84" RCP

120 100 80 60 40 20 0 20 40 60 80 100

CROSS SECTIONS - TRANS I-70 W.B.
STA. 671+00.00 TO STA. 671+50.00

FRA-70-14.54

813
2317

ms consultants, inc.

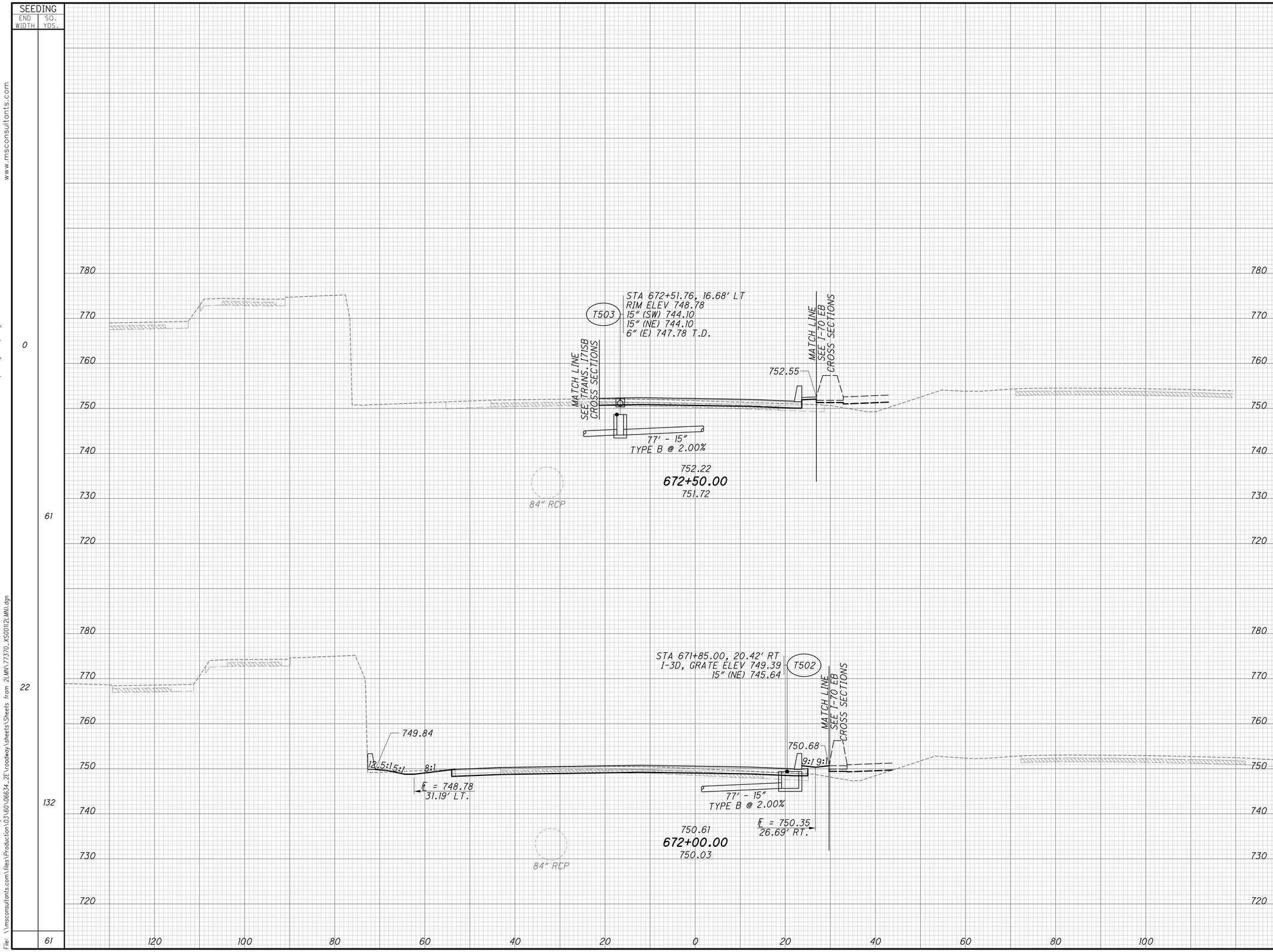

END AREA CUT	END AREA FILL	VOLUME CUT	VOLUME FILL
39	28		
		71	49
38	25	AH	
76	37	BK	
		137	60
		208	109

CALCULATED JJR
CHECKED ALL

CROSS SECTIONS - TRANS I-70 W.B.
STA. 672+00.00 TO STA. 672+50.00

FRA-70-14.54

814
2317

PLOT.CEL
ms consultants, inc.
msconsultants.com
www.msconsultants.com
Ohio DOT Workspace
70\71 East Interchange 2E
Batchplot Spec: \\msconsultants.com\files\production\03\60\06634_2E\standards\plotdrv\batchplt.spc
Pen Table: \\msconsultants.com\files\Standards\ustn\ohdot\V8i\ms\plotting\pen\V8i_ms_std.tbl
Plot Driver: \\msconsultants.com\files\Standards\ustn\ohdot\v8i\ms\plotting\PDF.pltcfg
34" x 22"
Model: XS_SHEET_temporary_model_name
View: FENCE_VIEW1
Printed: 6/19/2018 @ 12:11:36 PM By: dhall
File: \\msconsultants.com\files\Production\03\60\06634_2E\roadway\sheets\Sheets from 2LMN\77370_XS001(2LMN).dgn

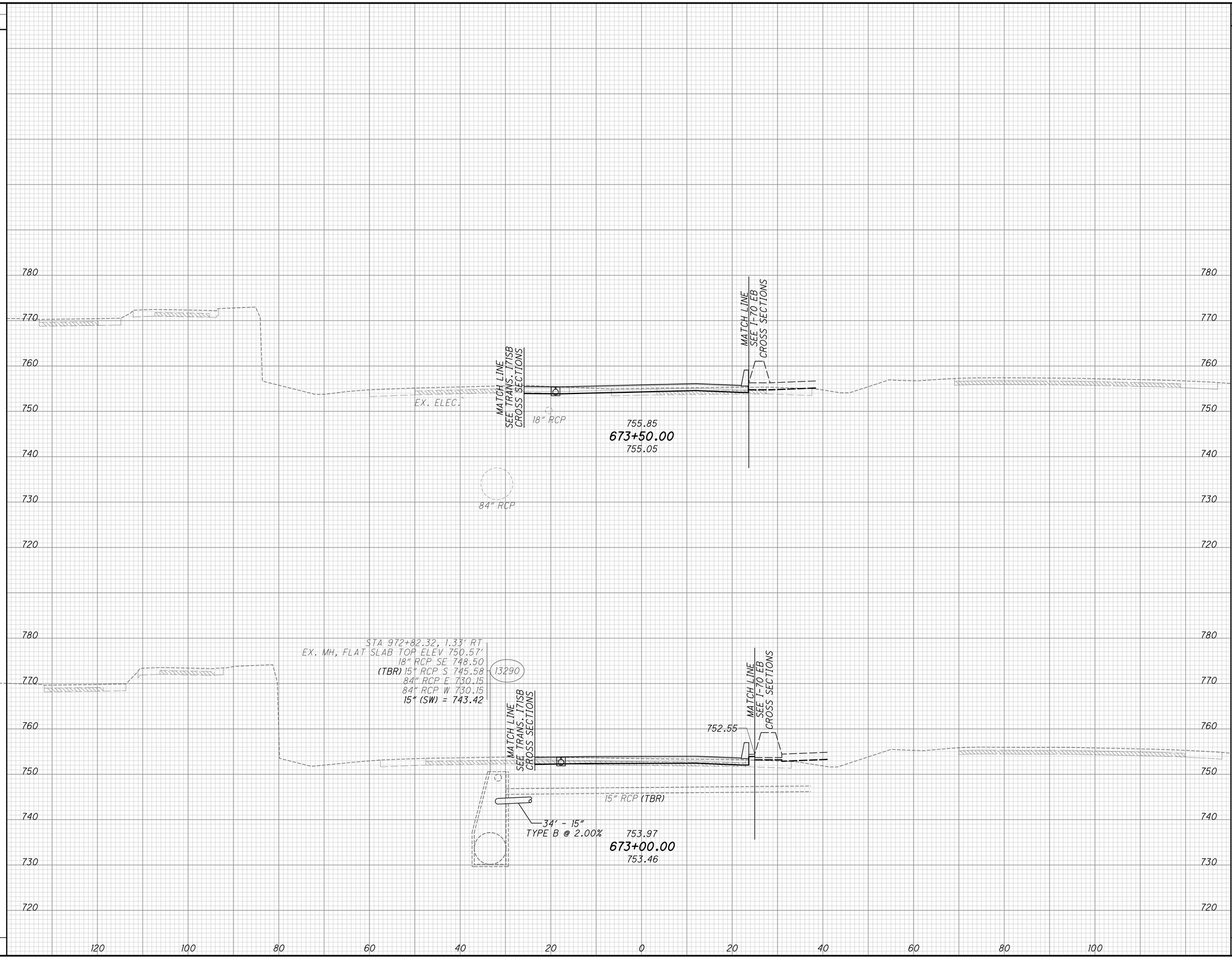

END AREA CUT	END AREA FILL	VOLUME CUT	VOLUME FILL
55	21		
		83	37
35	19		
		68	43
		151	80

CALCULATED JJR
CHECKED ALL

CROSS SECTIONS - TRANS I-70 W.B.
STA. 673+00.00 TO STA. 673+50.00

FRA-70-14.54

815
2317

ms consultants, inc.

PLOT.CEL

ms consultants, inc.
msconsultants.com

www.msconsultants.com

Ohio DOT Workspace
70\71 East Interchange 2E

Batchplot Spec: \\msconsultants.com\files\production\03\60\06634_2E\standards\plotdrv\batchplt.spc
Pen Table: \\msconsultants.com\files\Standards\ustn\ohdot\V8i\ms\plotting\pen\V8i_ms_std.tbl
Plot Driver: \\msconsultants.com\files\Standards\ustn\ohdot\v8i\ms\plotting\PDF.pltcfg

34" x 22"

Model: XS_SHEET_temporary_model_name
Printed: 6/19/2018 @ 8:54:54 AM By: jdouglas
File: N:\03\60\06634_2E\roadway\sheets\Sheets from 2LMN\77370_XS001(2LMN).dgn

PLOT.CEL

ms consultants, inc.
msconsultants.com

www.msconsultants.com

Ohio DOT Workspace
70\71 East Interchange 2E

0 0.5" 1"

34" x 22"

Batchplot Spec: \\msconsultants.com\files\production\03\60\06634.2E\standards\plotdir\batchplt.spc
Pen Table: \\msconsultants.com\files\Standards\ustn\ohdot\V8i\ms\plotting\pen\V8i_ms_std.tbl PCF: ohdotV8i
Plot Driver: \\msconsultants.com\files\Standards\ustn\ohdot\V8i\ms\plotting\PDF_60-06634_2E_Columbus PCF: 60-06634_2E_Columbus

Model: XS_SHEET_temporary_model_name Ref: FENCE_VIEW1
Printed: 6/19/2018 @ 8:54:59 AM By: jdougas
File: N:\03\60\06634_2E\roadway\sheets\Sheets from 2LMN\77370_XS0012LMN.dgn

SEEDING	
END WIDTH	SQ. YDS.
0	
0	
0	
0	
0	

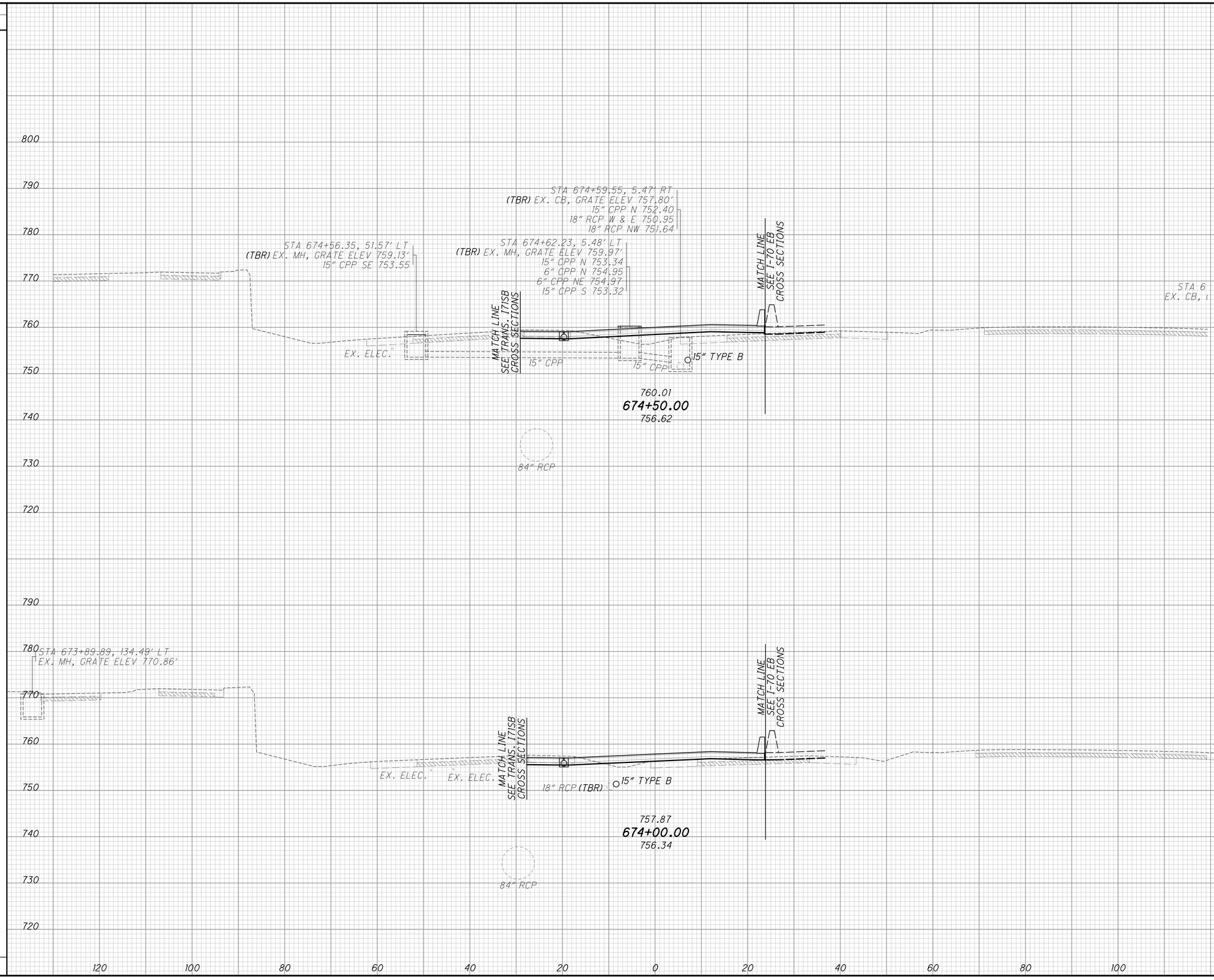

END AREA		VOLUME	
CUT	FILL	CUT	FILL
46	61		
		90	92
51	39		
		98	56
		188	148

CALCULATED JJR
CHECKED ALL

CROSS SECTIONS - TRANS I-70 W.B.
STA. 674+00.00 TO STA. 674+50.00

FRA-70-14.54

816
2317

ms consultants, inc.

PLOT.CEL

ms consultants, inc.
msconsultants.com

Ohio DOT Workspace
70\71 East Interchange 2E
www.msconsultants.com

1" 0 0.5"

Batchplot Spec: \\msconsultants.com\files\production\03\60\06634_2E\standards\plotdir\batchplt.spc
Pen Table: \\msconsultants.com\files\production\03\60\06634_2E\standards\usath\ohdot\V8i\ms\plotting\pen\V8i_ms_std.tbl PCF: ohdotV8i
Plot Driver: \\msconsultants.com\files\Standards\usath\ohdot\v8i\ms\plotting\PDF.pltcfg PCF: 60-06634_2E_Columbus

Model: XS_SHEET_temporary_model_name
File: N:\03\60\06634_2E\roadway\sheets\Sheets from 2LMN\77370_XS0012LMN.dgn
Printed: 6/19/2018 @ 8:54:55 AM By: jdouglas

34" x 22"

SEEDING	
END WIDTH	SQ. YDS.
12	5
48	13
61	

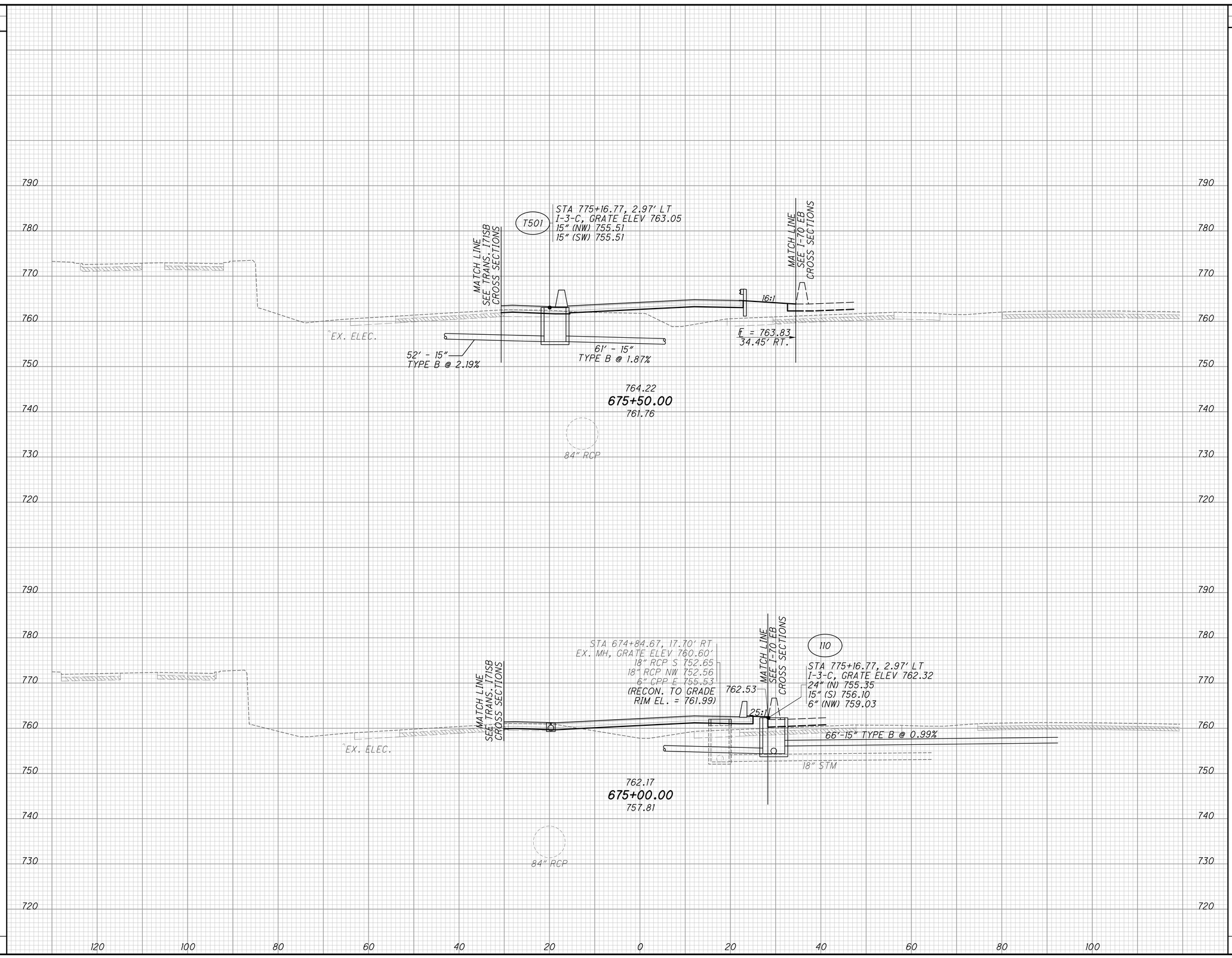

END AREA		VOLUME	
CUT	FILL	CUT	FILL
37	205	70	286
39	105	79	153
		149	439

CALCULATED JJR
CHECKED ALL

CROSS SECTIONS - TRANS I-70 W.B.
STA. 675+00.00 TO STA. 675+50.00

FRA-70-14.54

817
2317

PLOT.CEL

ms consultants, inc.
msconsultants.com

Ohio DOT Workspace
70\71 East Interchange 2E

www.msconsultants.com

1"
0.5"
0

PDF: ohdot\V8i
PCF: 60-06634_2E_Columbus

Batchplot Spec: \\msconsultants.com\files\Production\03\60\06634_2E\standards\plotdir\batchplt.spc
Pen Table: \\msconsultants.com\files\Standards\usth\ohdot\V8i\ms\plotting\pen\V8i_ms_std.tbl
Plot Driver: \\msconsultants.com\files\Standards\usth\ohdot\v8i\ms\plotting\PDF.pltcfg

Model: XS_SHEET_temporary_model_name
Printed: 6/19/2018 @ 8:54:58 AM By: jdouglas
File: N:\03\60\06634_2E\roadway\sheets\Sheets from 2LMN\77370_XSD012LMN.dgn

34" x 22"

SEEDING	
END WIDTH	SQ. YDS.
	31
	144
	21
	92
	236

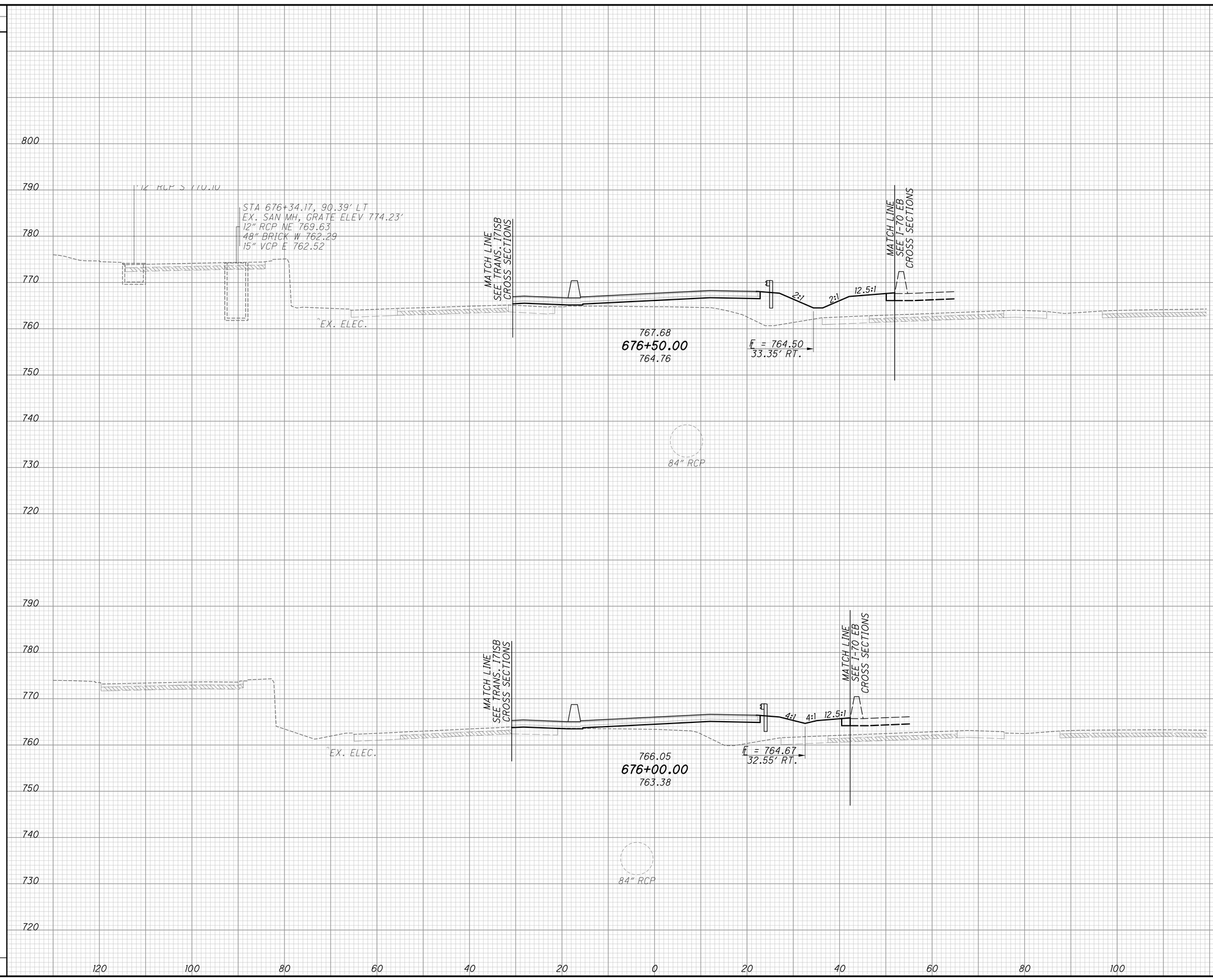

END AREA		VOLUME	
CUT	FILL	CUT	FILL
33	243		
		31	402
		35	366
1	191		
		66	768

CALCULATED JJR
CHECKED ALL

CROSS SECTIONS - TRANS I-70 W.B.
STA. 676+00.00 TO STA. 676+50.00

FRA-70-14.54

818
2317

ms consultants, inc.

PLOT.CEL

ms consultants, inc.
msconsultants.com

www.msconsultants.com

Ohio DOT Workspace
70\71 East Interchange 2E

0 0.5" 1"

PDF: ohdot\V8i
DGN: 60-06634_2E_Columbus

Batchplot Spec: \\msconsultants.com\files\production\03\60\06634_2E\standards\plotdir\batchplt.spc
Pen Table: \\msconsultants.com\files\Standards\usth\ohdot\V8i\ms\plotting\pen\V8i_ms_std.tbl
Plot Driver: \\msconsultants.com\files\Standards\usth\ohdot\v8i\ms\plotting\PDF.pltcfg

Model: XS_SHEET_temporary_model_name
Printed: 6/19/2018 @ 8:54:57 AM By: jdougas
File: N:\03\60\06634_2E\roadway\sheets\Sheets from 2LMN\77370_XS0012LMN.dgn

34" x 22"

SEEDING

END WIDTH	SQ. YDS.
	58
	283
	44
	208
	491

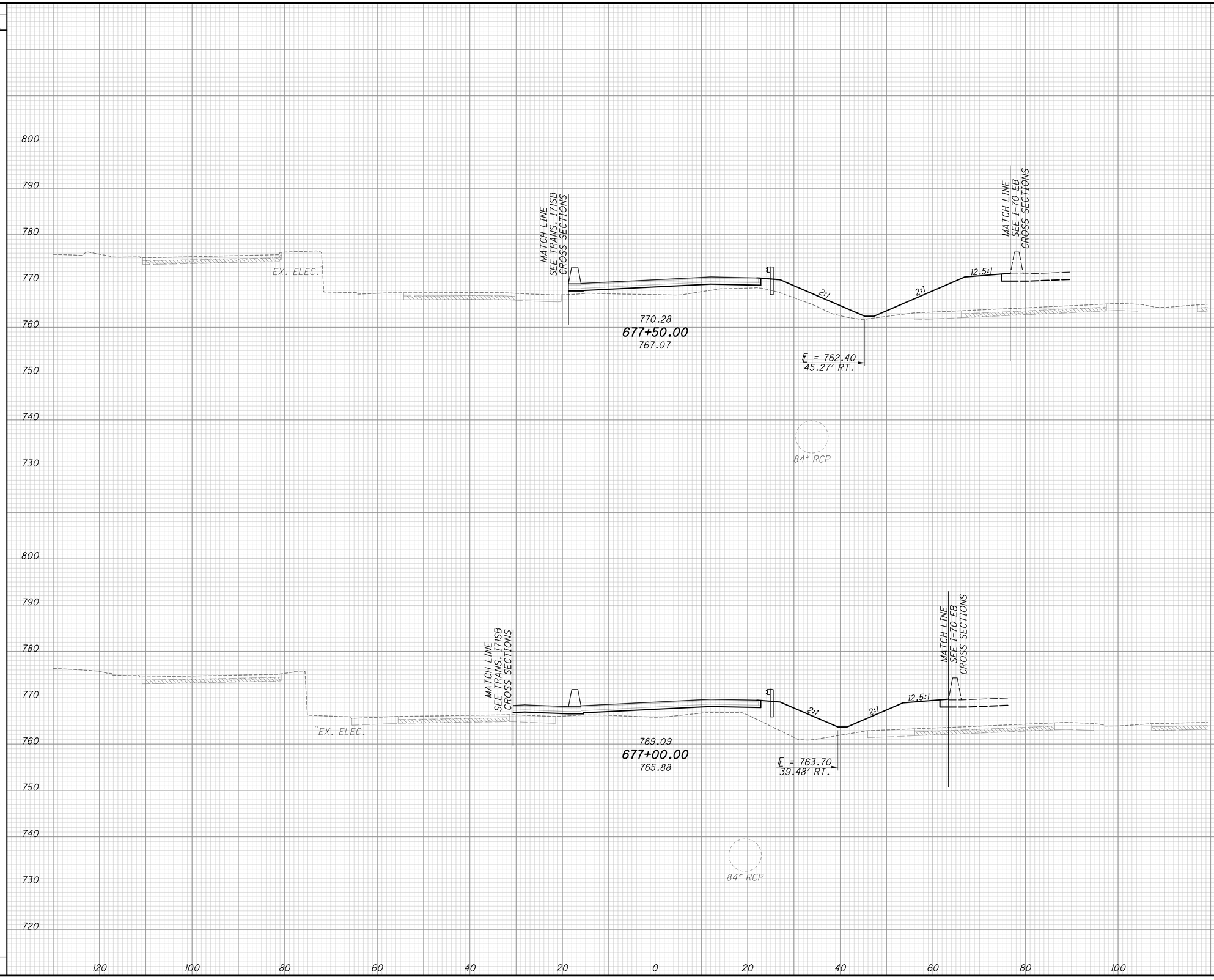

END AREA CUT	END AREA FILL	VOLUME CUT	VOLUME FILL
22	273		
		52	515
34	283		
		61	488
		113	1003

CALCULATED JJR
CHECKED ALL

CROSS SECTIONS - TRANS I-70 W.B.
STA. 677+00.00 TO STA. 677+50.00

FRA-70-14.54

819
2317

ms consultants, inc.

PLOT.CEL

ms consultants, inc.
msconsultants.com

www.msconsultants.com

Ohio DOT Workspace
70\71 East Interchange 2E

0 0.5" 1"

Batchplot Spec: \\msconsultants.com\files\production\03\60\06634_2E\standards\plotdir\batchplt.spc
Pen Table: \\msconsultants.com\files\Standards\usth\ohdot\V8i\ms\plotting\pen\V8i_ms_std.tbl PCF: ohdotV8i
Plot Driver: \\msconsultants.com\files\Standards\usth\ohdot\V8i\ms\plotting\PDF.pltcfg PCF: 60-06634_2E_Columbus

Model: XS_SHEET_temporary_model_name(s): FENCE_VIEW1
Printed: 6/19/2018 @ 8:54:58 AM By: jdougas
File: N:\03\60\06634_2E\roadway\sheets\Sheets from 2LMN\77370_XS0012LMN.dgn

34" x 22"

SEEDING	
END WIDTH	SQ. YDS.
17	99
19	214
	313

END AREA		VOLUME	
CUT	FILL	CUT	FILL
13	18		
2	49		
14	62		
23	298		
37	360		

CALCULATED JJR
CHECKED ALL

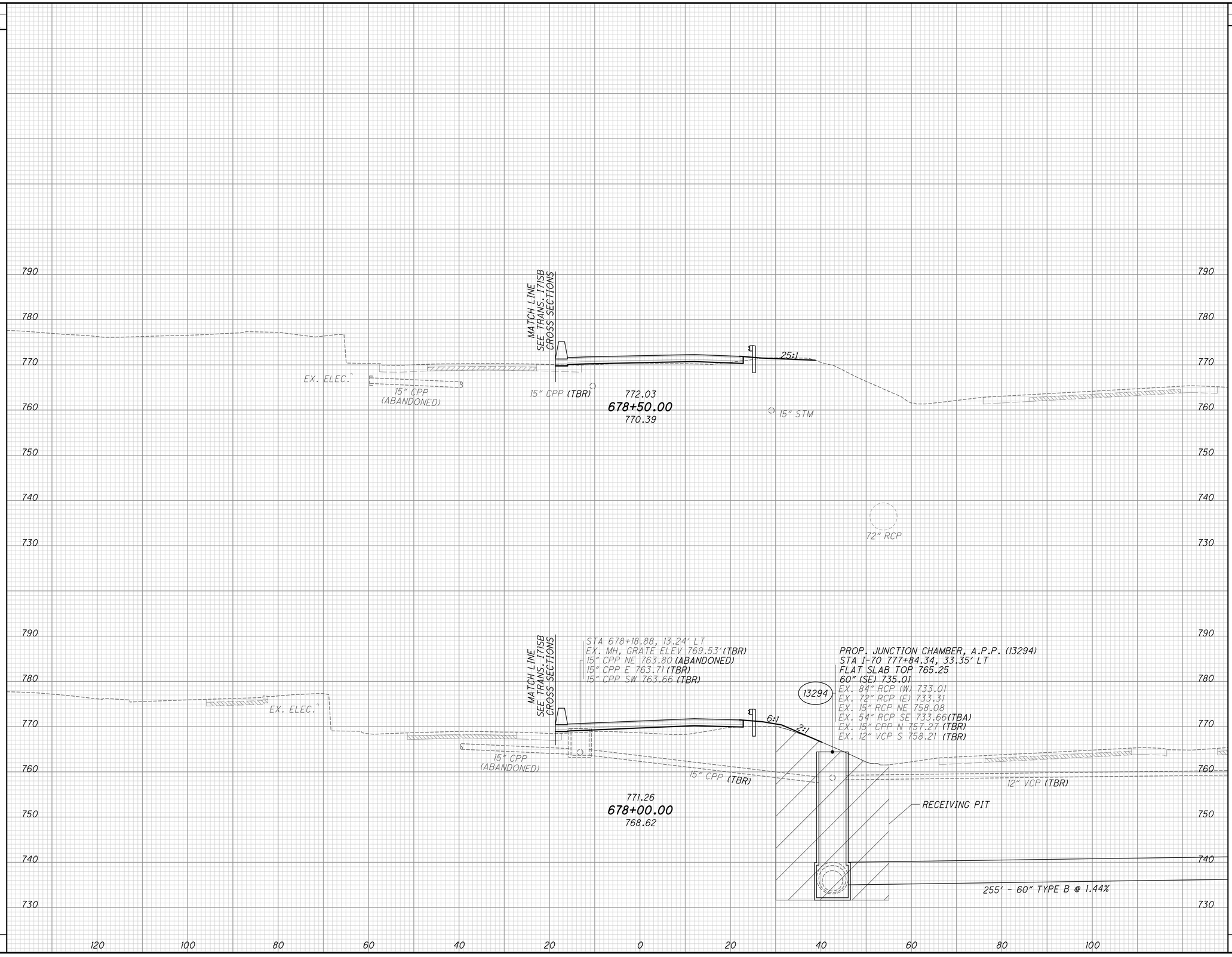

CROSS SECTIONS - TRANS I-70 W.B.
STA. 678+00.00 TO STA. 678+50.00

FRA-70-14.54

820
2317

ms consultants, inc.

PLOT.CEL

ms consultants, inc.
msconsultants.com

Ohio DOT Workspace
70\71 East Interchange 2E
www.msconsultants.com

Batchplot Spec: \\msconsultants.com\files\production\03\60\06634_2E\standards\plotdrv\batchplt.spec
Pen Table: \\msconsultants.com\files\Standards\ustn\ohdot\V8i\ms\plotting\pen\V8i_ms_std.tbl
Plot Driver: \\msconsultants.com\files\Standards\ustn\ohdot\v8i\ms\plotting\PDF.pltcfg

34" x 22"

Model: XS_SHEET_temporary_model_name
Printed: 6/19/2018 @ 8:54:59 AM By: jdouglas
File: N:\03\60\06634_2E\roadway\sheets\Sheets from 2LMN\77370_XS001(2LMN).dgn

SEEDING END WIDTH	SEEDING SQ. YDS.
32	
	161
26	
	119
	280

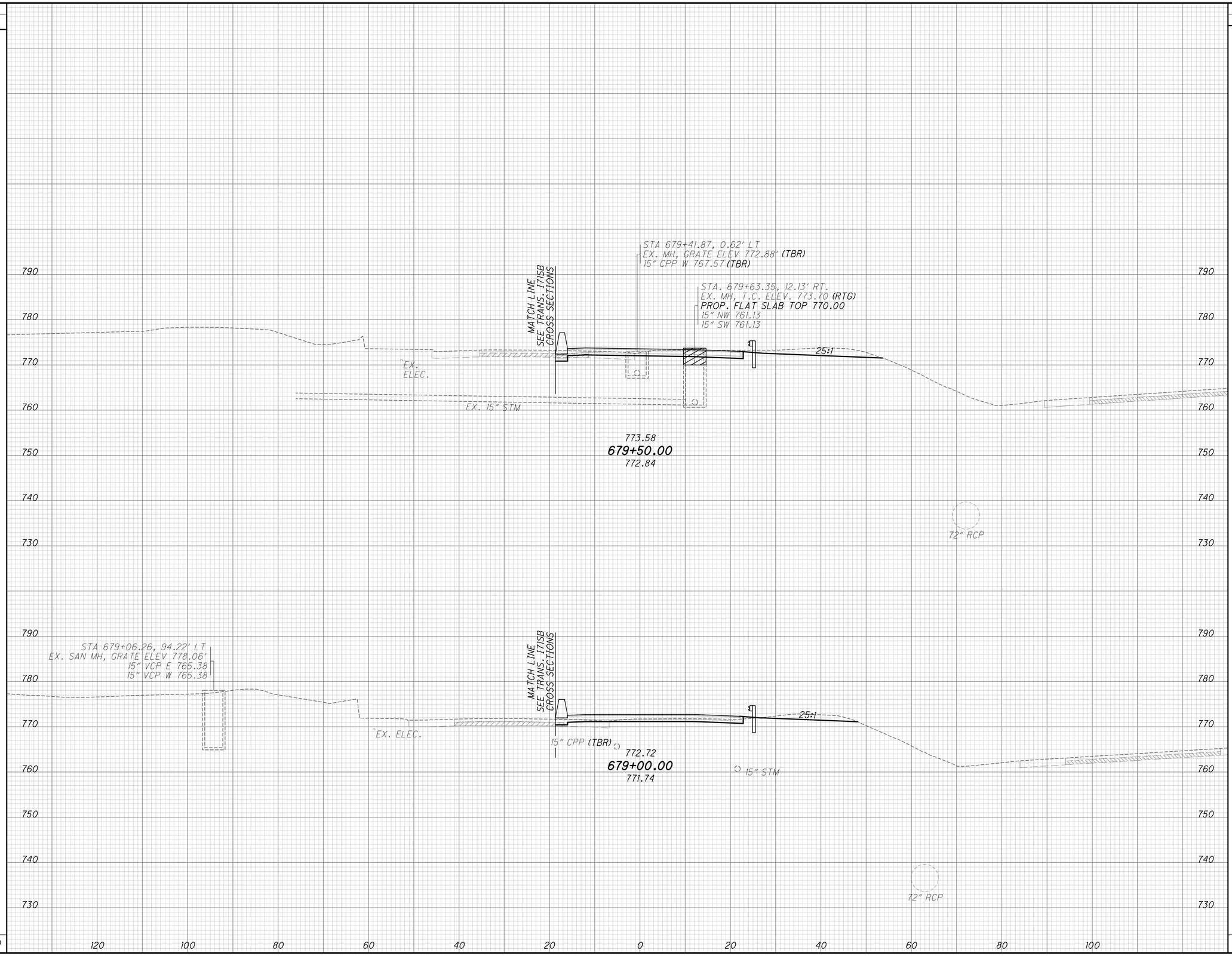

END AREA CUT	END AREA FILL	VOLUME CUT	VOLUME FILL
91	10		
		133	21
53	13		
		61	28
		194	49

CALCULATED JJR
CHECKED ALL

CROSS SECTIONS - TRANS I-70 W.B.
STA. 679+00.00 TO STA. 679+50.00

FRA-70-14.54

821
2317

ms consultants, inc.

PLOT.CEL

ms consultants, inc.
msconsultants.com

www.msconsultants.com

Ohio DOT Workspace
70\71 East Interchange 2E

1" 0.5" 0

PDF: ohdot\V8i
PCF: 60-06634_2E_Columbus

34" x 22"

Batchplot Spec: \\msconsultants.com\files\production\03\60\06634_2E\standards\plotdir\batchplt.spc
Pen Table: \\msconsultants.com\files\Standards\usth\ohdot\V8i\ms\plotting\pen\V8i_ms_std.tbl
Plot Driver: \\msconsultants.com\files\Standards\usth\ohdot\v8i\ms\plotting\PDF.pltcfg

Model: XS_SHEET_temporary_model_name(s): FENCE_VIEW1
Printed: 6/19/2018 @ 8:55:00 AM By: jdougas
File: N:\03\60\06634_2E\roadway\sheets\Sheets from 2LMN\77370_XS0012LMN.dgn

SEEDING	
END WIDTH	SQ. YDS.
28	
	166
32	
	176
	342

STA 680+52.63, 61.59' LT
EX. SAN MH, GRATE ELEV 778.41'
15" VCP N 766.93
8" VCP E 766.85
15" VCP W 766.76

MATCH LINE
SEE TRANS.: 1TISB
CROSS SECTIONS

EX. ELEC.

25:1

775.90
680+50.00
775.82

72" RCP

EX. ELEC.

774.64
680+00.00
774.29

72" RCP

800 790 780 770 760 750 740 730

120 100 80 60 40 20 0 20 40 60 80 100

END AREA		VOLUME	
CUT	FILL	CUT	FILL
113	3		
		200	8
102	6		
		179	15
		379	23

CALCULATED JJR
CHECKED ALL

CROSS SECTIONS - TRANS I-70 W.B.
STA. 680+00.00 TO STA. 680+50.00

FRA-70-14.54

822
2317

ms consultants, inc.

PLOT.CEL

ms consultants, inc.
msconsultants.com

www.msconsultants.com

Ohio DOT Workspace
70\71 East Interchange 2E

1"
0.5"
0

Batchplot Spec: \\msconsultants.com\files\production\03\60\06634_2E\standards\plotdrv\batchplt.spc
Pen Table: \\msconsultants.com\files\Standards\usth\ohdot\V8i\ms\plotting\pen\V8i_ms_std.tbl PDF: ohdot_ms_std.pltcfg
Plot Driver: \\msconsultants.com\files\Standards\usth\ohdot\v8i\ms\plotting\PDF.pltcfg PDF: 60-06634_2E_Columbus

Model: XS_SHEET_temporary_model_name Cell: FENCE_VIEW1
Printed: 6/19/2018 @ 8:55:01 AM By: jdouglas
File: N:\03\60\06634_2E\roadway\sheets\Sheets from 2LMN\77370_XS0012LMN1.dgn

34" x 22"

SEEDING	
END WIDTH	SQ. YDS.
14	
	101
22	
	140
	241

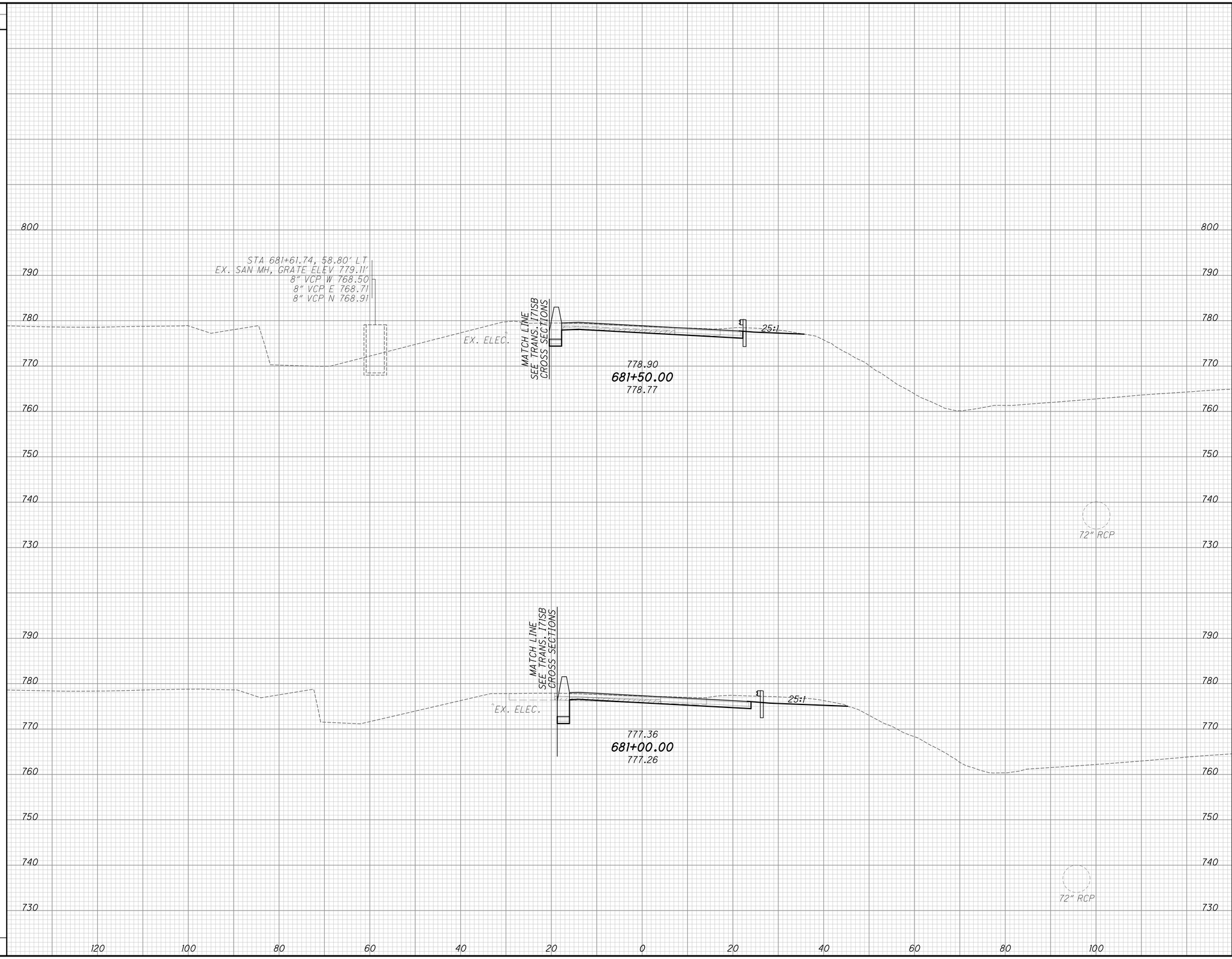

END AREA		VOLUME	
CUT	FILL	CUT	FILL
65	2		
		150	4
96	3		
		194	5
		344	9

CALCULATED JJR
CHECKED ALL

CROSS SECTIONS - TRANS I-70 W.B.
STA. 681+00.00 TO STA. 681+50.00

FRA-70-14.54

823
2317

ms consultants, inc.

PLOT.CEL

ms consultants, inc.
msconsultants.com

www.msconsultants.com

Ohio DOT Workspace
70\71 East Interchange 2E

1" 0 0.5"

Batchplot Spec: \\msconsultants.com\files\production\03\60\06634_2E\standards\plotdir\batchplt.spc
Pen Table: \\msconsultants.com\files\Standards\usth\ohdot\V8i\ms\plotting\pen\V8i_ms_std.tbl
Plot Driver: \\msconsultants.com\files\Standards\usth\ohdot\V8i\ms\plotting\PDF.pltcfg

Model: XS_SHEET_temporary_model_name
Printed: 6/19/2018 @ 8:55:02 AM
File: N:\03\60\06634_2E\roadway\sheets\Sheets from 2LMN\77370_XS0012LMN1.dgn

34" x 22"

SEEDING	
END WIDTH	SQ. YDS.
	0
0	
	0
	0
	40
	40

800
790
780
770
760
750
740
730

EX. ELEC.
682+50.00
776.14
EX. ELEC.
EX. ELEC.
EX. ELEC.
15" RCP
72" RCP
STA 682+24.20
END WORK
STA. 682+23.58
BACK
STA 682+20.49, 130.08' LT
EX. CB, GRATE ELEV 777.89'
8" PVC E 774.49
8" PVC N 774.49
4" CPP E 776.31
4" CPP S 776.30
EX. ELEC.
MATCH LINE
SEE TRANS. 1715B
CROSS SECTIONS
780.44
682+00.00
780.39
STA 681+87.06, 67.08' RT
EX. MH, GRATE ELEV 761.40'
12" RCP SE 755.65
15" RCP E 755.40
6" CMP E 756.10
EX. ELEC.
EX. ELEC.
72" RCP

120 100 80 60 40 20 0 20 40 60 80 100

END AREA		VOLUME			
CUT	FILL	CUT	FILL		
0	0				
		0	0		
0	0			AH	
0	0			BK	
				42	0
47	0				
				104	2
				146	2

CALCULATED JJR
CHECKED ALL

CROSS SECTIONS - TRANS I-70 W.B.
STA. 682+00.00 TO STA. 682+50.00

FRA-70-14.54

824
2317

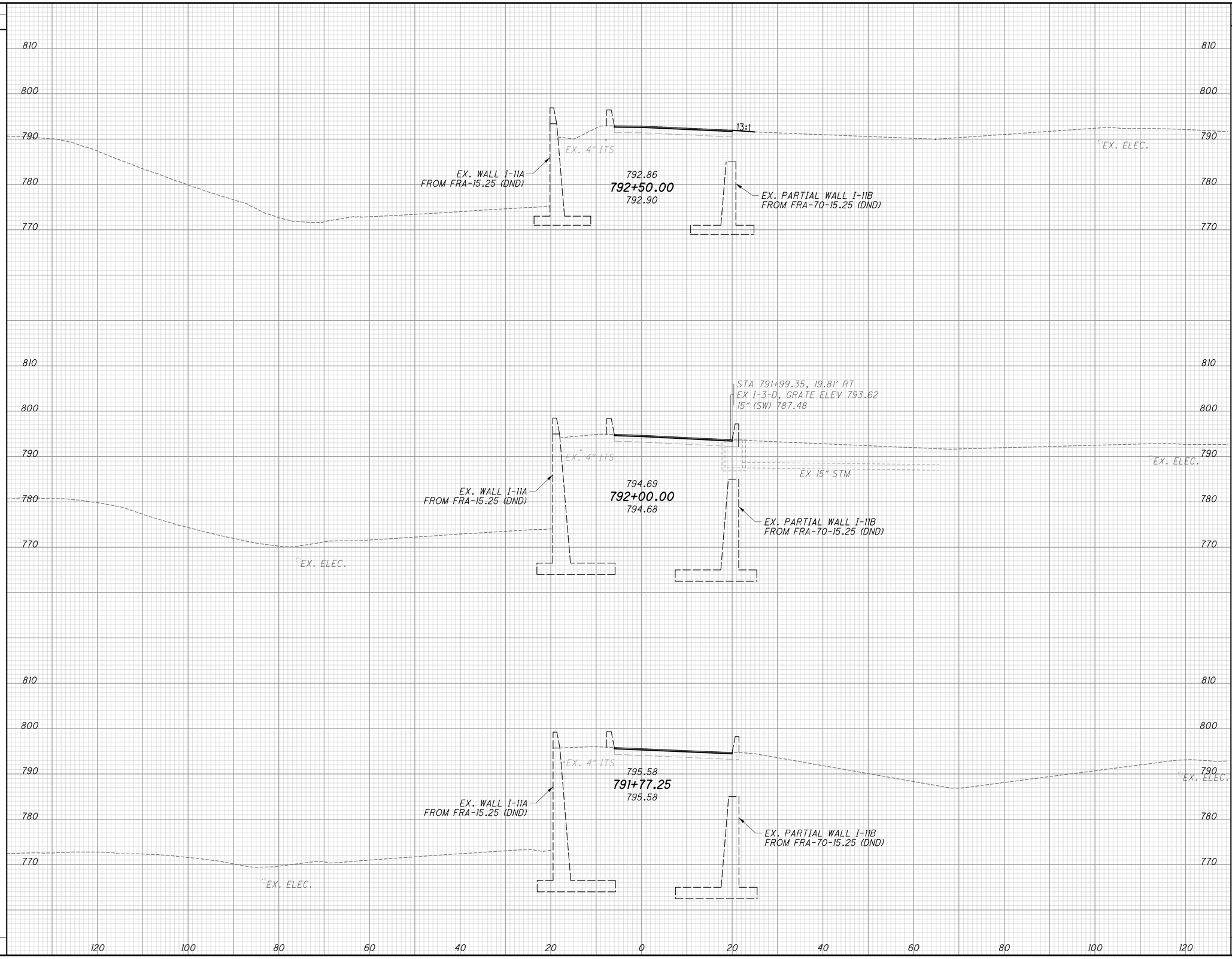

END AREA CUT	END AREA FILL	VOLUME CUT	VOLUME FILL
0	0		
		0	0
0	0		
		0	0
0	0		
		0	0

CALCULATED

CHECKED

CROSS SECTIONS TRANS RAMP P2 (CENTRAL)
STA. 791+77.25 TO STA. 792+50.00

FRA-70-14.54

825
2317

ms consultants, inc.

PLOT.CEL

ms consultants, inc.
msconsultants.com

Ohio DOT Workspace
70\71 East Interchange 2E
www.msconsultants.com

Batchplot Spec: \\msconsultants.com\files\production\03\60\06634_2E\standards\plotdrv\batchplt.spc
Pen Table: \\msconsultants.com\files\Standards\ustn\ohdot\V8i\ms\plotting\pen\V8i_ms_std.tbl
Plot Driver: \\msconsultants.com\files\Standards\ustn\ohdot\v8i\ms\plotting\PDF.pltcfg

34" x 22"

Model: XS_SHEET_791+77.25_TO_792+50.00 Dw: FENCE_VIEW1
Printed: 6/19/2018 @ 8:55:03 AM By: jdouglas
File: N:\03\60\06634_2E\roadway\sheets\105322TXS106.dgn

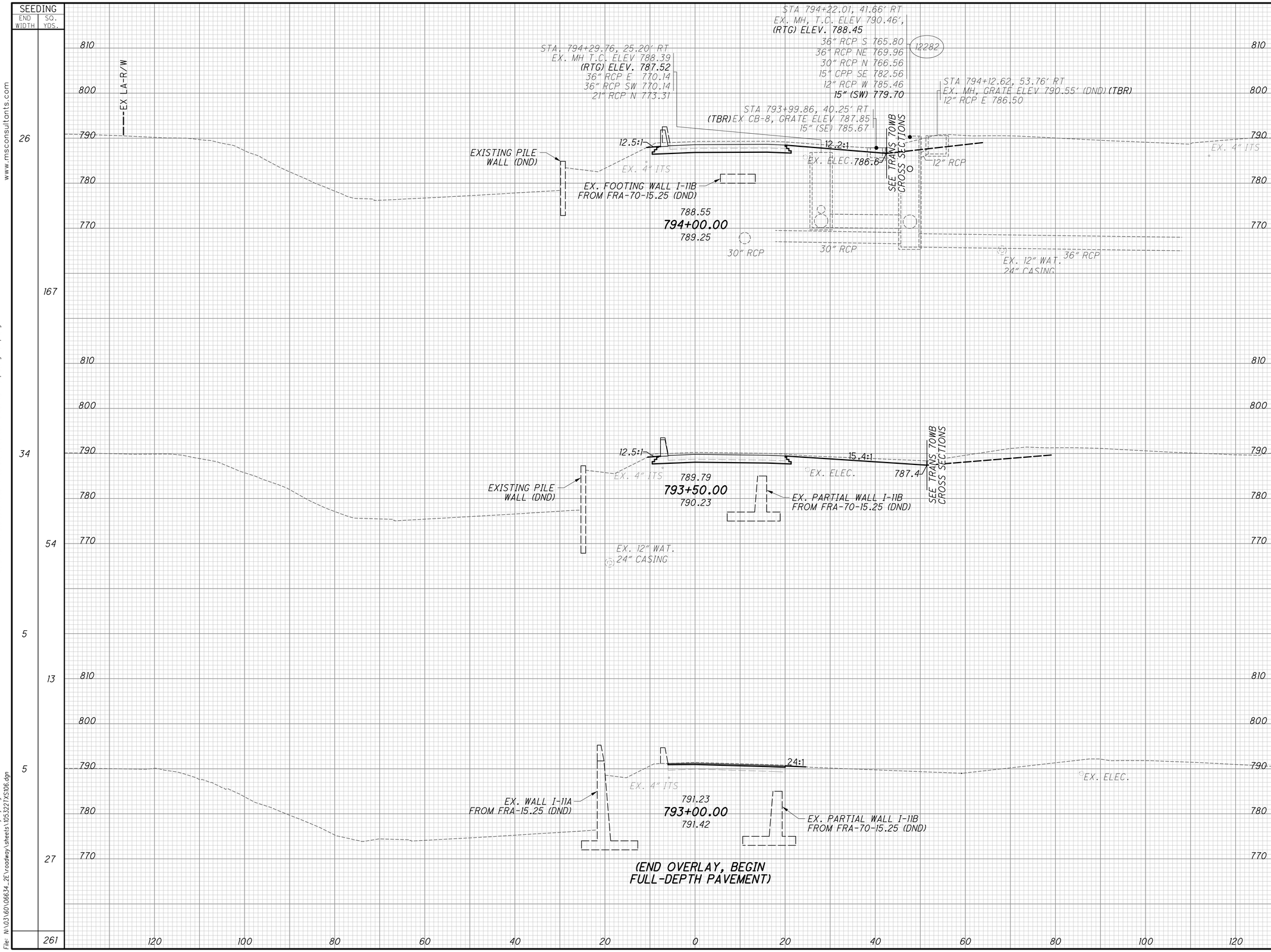

END AREA CUT	END AREA FILL	VOLUME CUT	VOLUME FILL
93	2		
		165	4
85	2		
		132	4
58	2	AH	
0	0	BK	
		0	0
		297	8

CALCULATED

CHECKED

CROSS SECTIONS TRANS RAMP P2 (CENTRAL)
STA. 793+00.00 TO STA. 794+00.00

FRA-70-14.54

826
2317

ms consultants, inc.

PLOT.CEL

ms consultants, inc.
msconsultants.com

Ohio DOT Workspace
70\71 East Interchange 2E
www.msconsultants.com

Batchplot Spec: \\msconsultants.com\files\production\03\60\06634_2E\standards\plotdrv\batchplt.spc
Pen Table: \\msconsultants.com\files\Standards\ustn\ohdot\V8i\ms\plotting\pen\V8i_ms_std.tbl
Plot Driver: \\msconsultants.com\files\Standards\ustn\ohdot\v8i\ms\plotting\PDF.pltcfg

34" x 22"

Model: XS_SHEET_793+00.00_TO_794+00.00 Dgn: FENCE_VIEW1
Printed: 6/19/2018 @ 8:55:04 AM By: jdouglas
File: N:\03\60\06634_2E\roadway\sheets\105322TXS106.dgn

PLOT.CEL

ms consultants, inc.
msconsultants.com

Ohio DOT Workspace
70\71 East Interchange 2E
www.msconsultants.com

0 0.5" 1"

PDF: ohdot\V8i
PCF: 60-06634_2E_Columbus

Batchplot Spec: \\msconsultants.com\files\production\03\60\06634_2E\standards\plotdir\batchplt.spc
Pen Table: \\msconsultants.com\files\production\03\60\06634_2E\standards\ustn\ohdot\V8i\ms\plotting\pen\V8i_ms_std.tbl
Plot Driver: \\msconsultants.com\files\Standards\ustn\ohdot\V8i\ms\plotting\PDF.pltcfg

Model: XS_SHEET_794+50.00_TO_795+50.00
Printed: 6/19/2018 @ 8:55:05 AM By: jdouglas
File: N:\03\60\06634_2E\roadway\sheets\05322TXS106.dgn

34" x 22"

SEEDING	
END WIDTH	SQ. YDS.
7	63
16	91
17	119
	273

EX LA-R/W

EX. SAN

EX. BARRIER

STA 795+28.12, 19.61' LT
EX. MH
T.C. 782.99
36" RCP W 770.95
36" RCP SE 770.98
12" RCP N 772.74
15" (W) 778.74
15" (N) 772.49

1275

12.5:1

EX. ELEC. 785.97

795+50.00
786.41

SEE TRANS TOWB CROSS SECTIONS

EX 15" RCP

12" RCP

EX R/W

EX LA-R/W

STA 795+24.04, 27.69' LT
EX CB-8, GRATE ELEV 780.69
15" (SE) 772.95
12" (NW) 772.95

11.2:1

786.3

15" TYPE B

EXIST. FOOTING I-11B

36" RCP

786.66

795+00.00
787.36

STA 794+99.97, 30.66' RT
EX CB-8, GRATE ELEV 786.29
15" (W) 783.36

EX. ELEC.

STA 794+29.76, 25.20' RT
EX. MH
GRATE ELEV 788.39
36" RCP E 770.14
36" RCP SW 770.14
21" RCP N 773.31

16032

STA 794+58.48, 5.18' LT
EX I-3-D, GRATE ELEV 787.82
15" (E) 781.32

P275

STA 794+58.48, 4.48' LT
I-3-D, GRATE ELEV 786.94
15" (E) 781.32

EXISTING PILE WALL (DND)

EX. 4" ITS

EX. ELEC.

786.5

15" TYPE C

15" CPP

787.51

794+50.00
788.31

36" RCP

END AREA		VOLUME	
CUT	FILL	CUT	FILL
61	1		
80	2		
156	3		
88	1		
		131	3
		168	3
		455	9

CALCULATED

CHECKED

CROSS SECTIONS TRANS RAMP P2 (CENTRAL)
STA. 794+50.00 TO STA. 795+50.00

FRA-70-14.54

827
2317

ms consultants, inc.

PLOT.CEL

ms consultants, inc.
msconsultants.com

Ohio DOT Workspace
70\71 East Interchange 2E
www.msconsultants.com

Batchplot Spec: \\msconsultants.com\files\production\03\60\06634_2E\standards\plotdrv\batchplt.spc
Pen Table: \\msconsultants.com\files\Standards\ustn\ohdot\V8i\ms\plotting\pen\V8i_ms_std.tbl
Plot Driver: \\msconsultants.com\files\Standards\ustn\ohdot\v8i\ms\plotting\PDF.pltcfg

34" x 22"

Model: XS_SHEET_796+00.00_TO_797+00.00 Div: FENCE_VIEW1
Printed: 6/19/2018 @ 8:55:06 AM By: jdouglas
File: N:\03\60\06634_2E\roadway\sheets\105322TXS106.dgn

SEEDING END WIDTH	SEEDING SQ. YDS.	END AREA CUT	END AREA FILL	VOLUME CUT	VOLUME FILL
2		43	2		
	10			80	4
2		43	2		
	10			84	3
2		47	1		
	24			100	2
	44			264	9

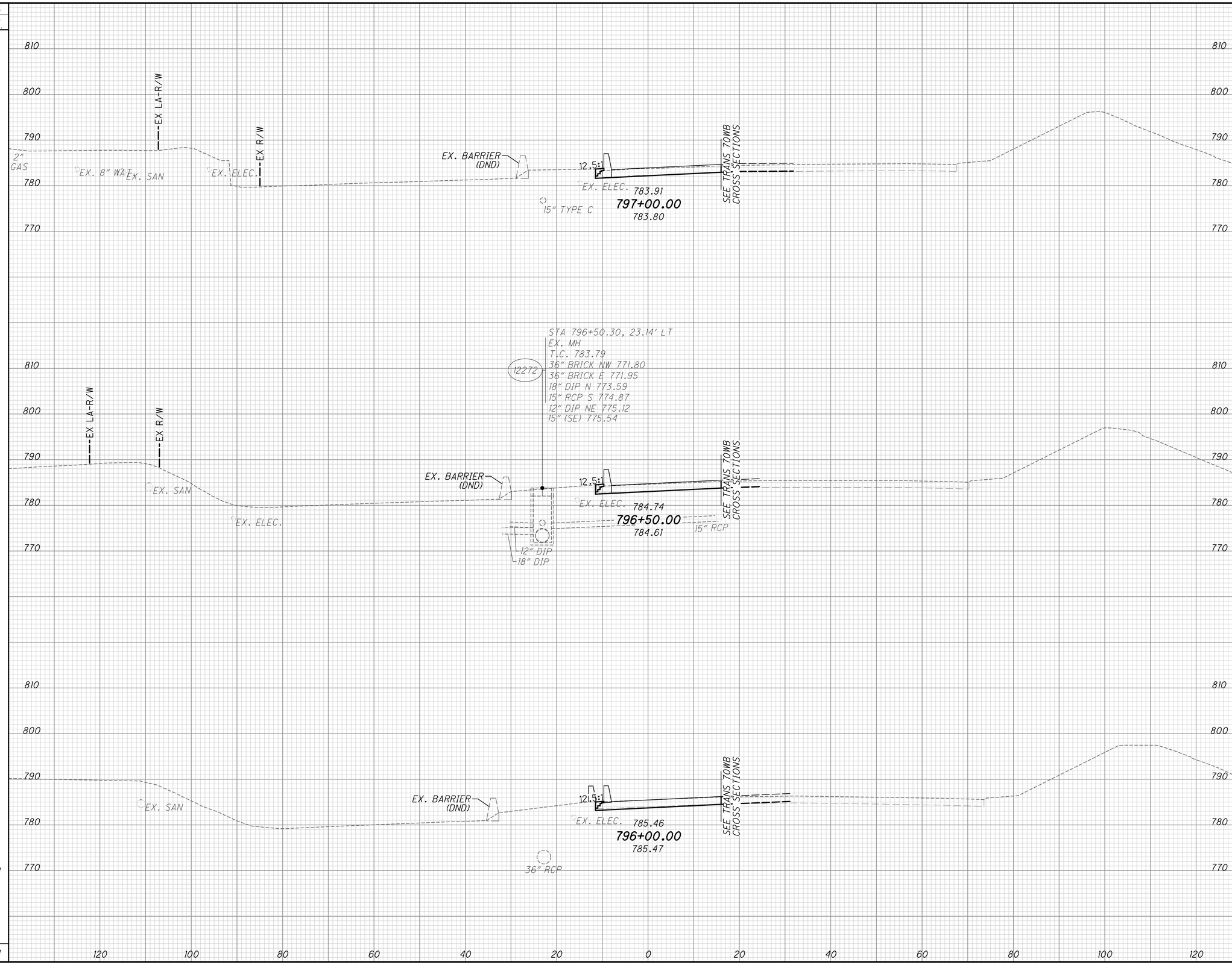

CALCULATED

CHECKED

CROSS SECTIONS TRANS RAMP P2 (CENTRAL)
STA. 796+00.00 TO STA. 797+00.00

FRA-70-14.54

828
2317

ms consultants, inc.

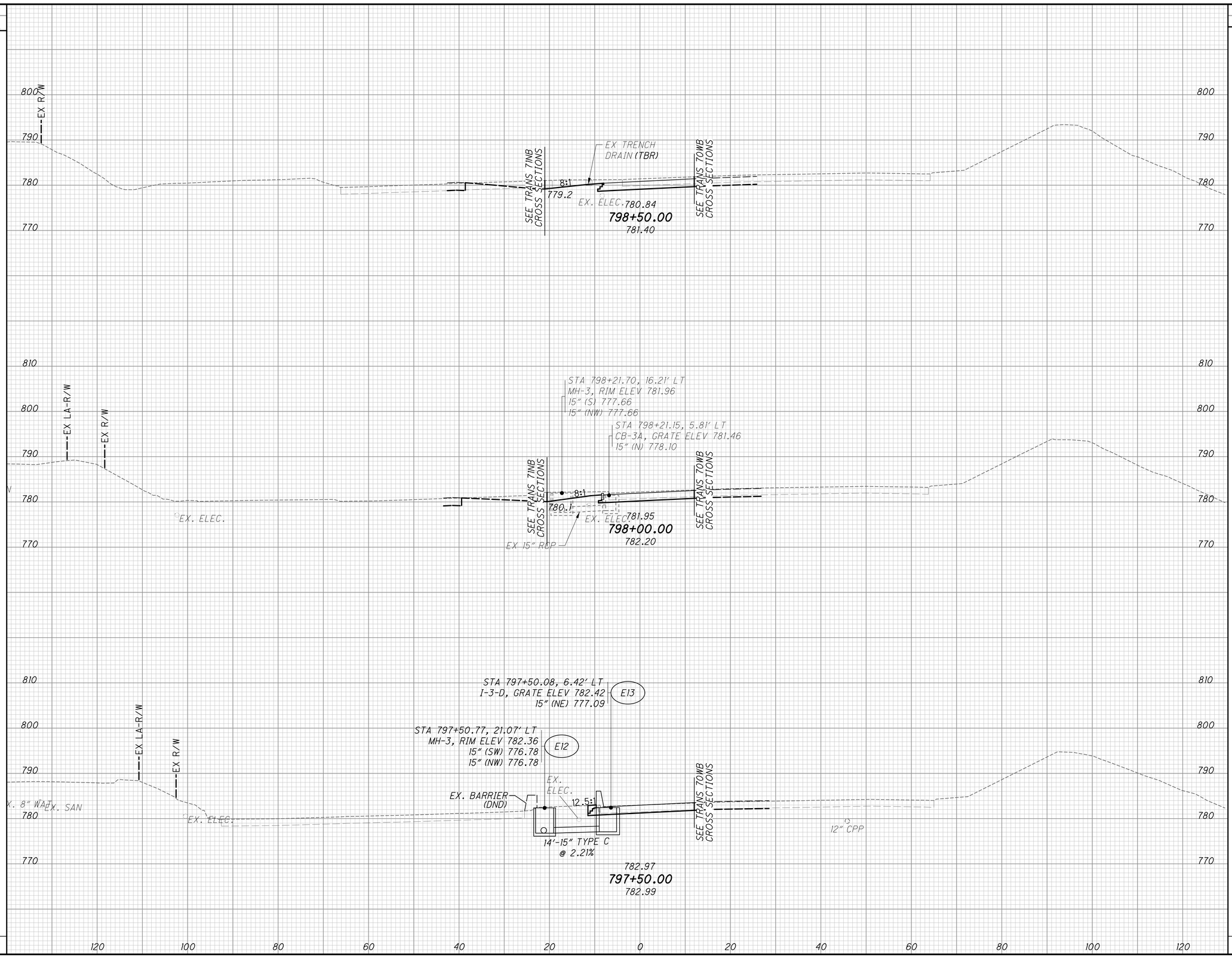

END AREA CUT	END AREA FILL	VOLUME CUT	VOLUME FILL
67	1		
		115	2
57	1		
		91	3
41	2		
		78	4
		284	9

CALCULATED

CHECKED

CROSS SECTIONS TRANS RAMP P2 (CENTRAL)
STA. 797+50.00 TO STA. 798+50.00

FRA-70-14.54

829
2317

ms consultants, inc.

PLOT.CEL

ms consultants, inc.
msconsultants.com

Ohio DOT Workspace
70\71 East Interchange 2E
www.msconsultants.com

Batchplot Spec: \\msconsultants.com\files\production\03\60\06634_2E\standards\plotdrv\batchplt.spc
Pen Table: \\msconsultants.com\files\Standards\ustn\ohdot\V8i\ms\plotting\pen\V8i_ms_std.tbl
Plot Driver: \\msconsultants.com\files\Standards\ustn\ohdot\v8i\ms\plotting\PDF.pltcfg

34" x 22"

Model: XS_SHEET_797+50.00_TO_798+50.00 Div: FENCE_VIEW1
Printed: 6/19/2018 @ 8:55:08 AM By: jdouglas
File: N:\03\60\06634_2E\roadway\sheets\105322TXS106.dgn

PLOT.CEL

ms consultants, inc.
msconsultants.com

Ohio DOT Workspace
70\71 East Interchange 2E
www.msconsultants.com

Batchplot Spec: \\msconsultants.com\files\production\03\60\06634_2E\standards\plotdrv\batchplt.spc
Pen Table: \\msconsultants.com\files\Standards\ustn\ohdot\V8i\ms\plotting\pen\V8i_ms_std.tbl PCF: ohdotV8i
Plot Driver: \\msconsultants.com\files\Standards\ustn\ohdot\v8i\ms\plotting\PDF.pltcfg PCF: 60-06634_2E_Columbus

34" x 22"

Model: XS_SHEET_799+00.00_TO_800+00.00 Div: FENCE_VIEW1
Printed: 6/19/2018 @ 8:55:07 AM By: jdouglas
File: N:\03\60\06634_2E\roadway\sheets\105322TXS106.dgn

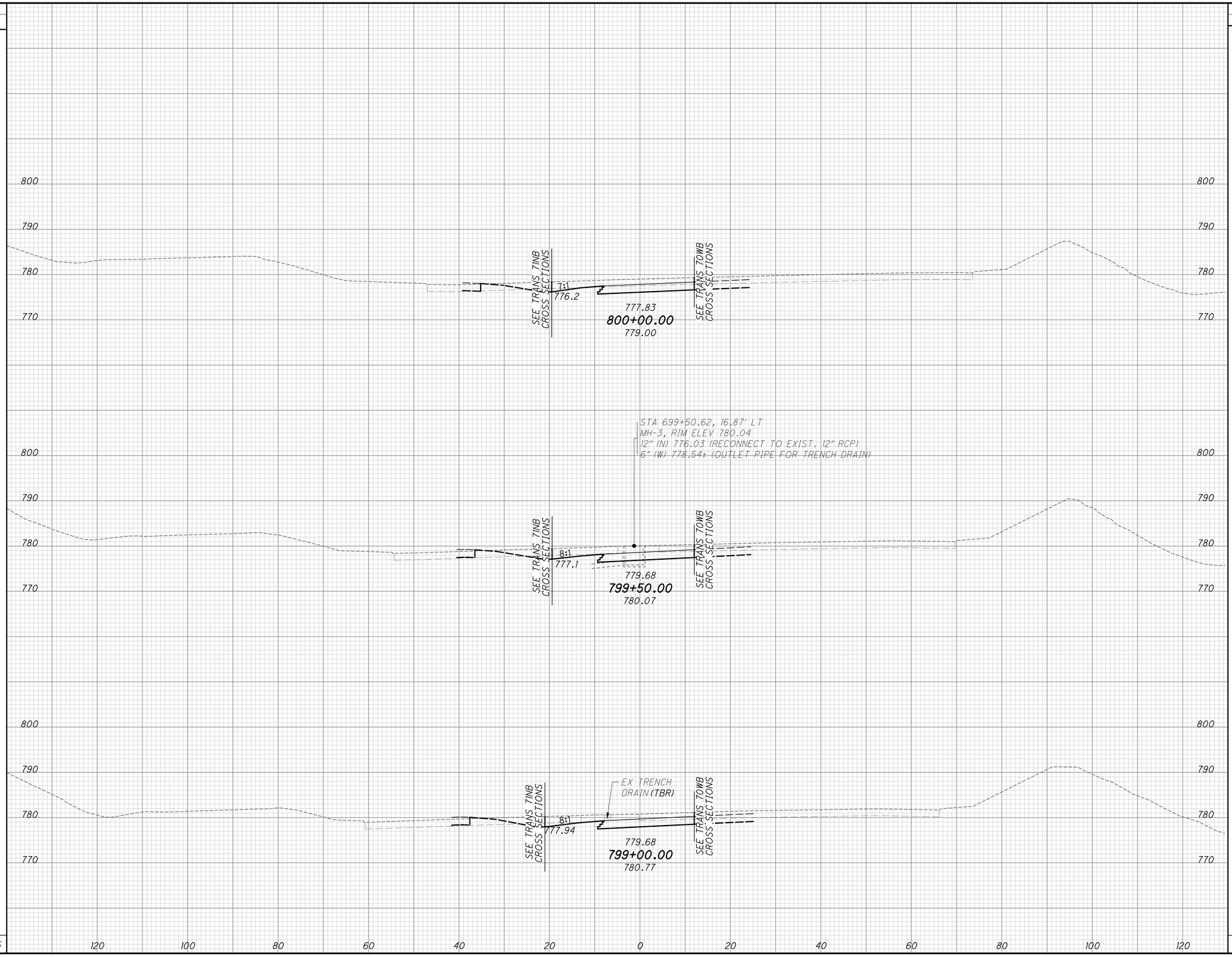

END AREA CUT	END AREA FILL	VOLUME CUT	VOLUME FILL
79	1		
		154	2
87	1		
		155	2
80	1		
		136	2
		445	6

CALCULATED

CHECKED

CROSS SECTIONS TRANS RAMP P2 (CENTRAL)
STA. 799+00.00 TO STA. 800+00.00

FRA-70-14.54

830
2317

ms consultants, inc.

PLOT.CEL

ms consultants, inc.
msconsultants.com

Ohio DOT Workspace
70\71 East Interchange 2E
www.msconsultants.com

Batchplot Spec: \\msconsultants.com\files\production\03\60\06634_2E\standards\plotdrv\batchplt.spec
Pen Table: \\msconsultants.com\files\Standards\ustn\ohdot\V8i\ms\plotting\pen\V8i_ms_std.tbl
Plot Driver: \\msconsultants.com\files\Standards\ustn\ohdot\v8i\ms\plotting\PDF.pltcfg

34" x 22"

Model: XS_SHEET_800+50.00_TO_801+50.00 Dw: FENCE_VIEW1
Printed: 6/19/2018 @ 8:55:08 AM By: jdouglas
File: N:\03\60\06634_2E\roadway\sheets\1053227XS106.dgn

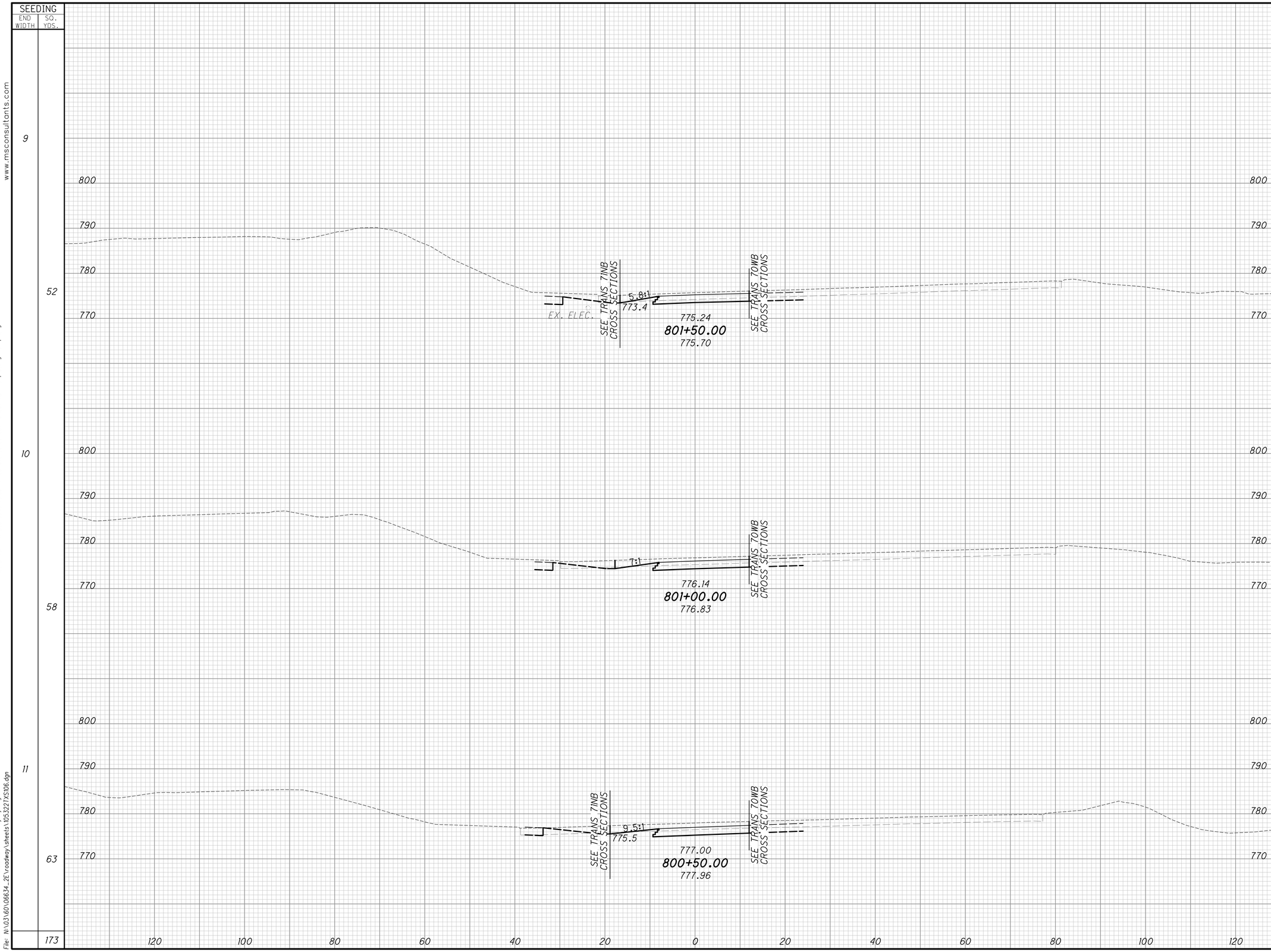

END AREA CUT	END AREA FILL	VOLUME CUT	VOLUME FILL
59	3		
		115	6
65	3		
		127	4
72	2		
		140	3
		382	13

CALCULATED

CHECKED

CROSS SECTIONS TRANS RAMP P2 (CENTRAL)
STA. 800+50.00 TO STA. 801+50.00

FRA-70-14.54

831
2317

ms consultants, inc.

34" x 22"

Model: XS_SHEET_802+00.00_TO_802+72.68
Printed: 6/19/2018 @ 8:55:09 AM
File: N:\03\60\06634_2E\roadway\sheets\105322TXS106.dgn
Level: FENCE_VIEW1
By: jdouglas

Batchplot Spec: \\msconsultants.com\files\production\03\60\06634_2E\standards\plotdrv\batchplt.spc
Pen Table: \\msconsultants.com\files\Standards\ustn\ohdot\V8i\ms\plotting\pen\V8i_ms_std.tbl
Plot Driver: \\msconsultants.com\files\Standards\ustn\ohdot\v8i\ms\plotting\PDF.pltcfg

0 1" 0.5"

PCF: ohdotV8i
PCF: 60-06634_2E_Columbus

Ohio DOT Workspace
70\71 East Interchange 2E

www.msconsultants.com

ms consultants, inc.
msconsultants.com

PLOT.CEL

SEEDING

END WIDTH	SQ. YDS.
8	46
2	26
0	2

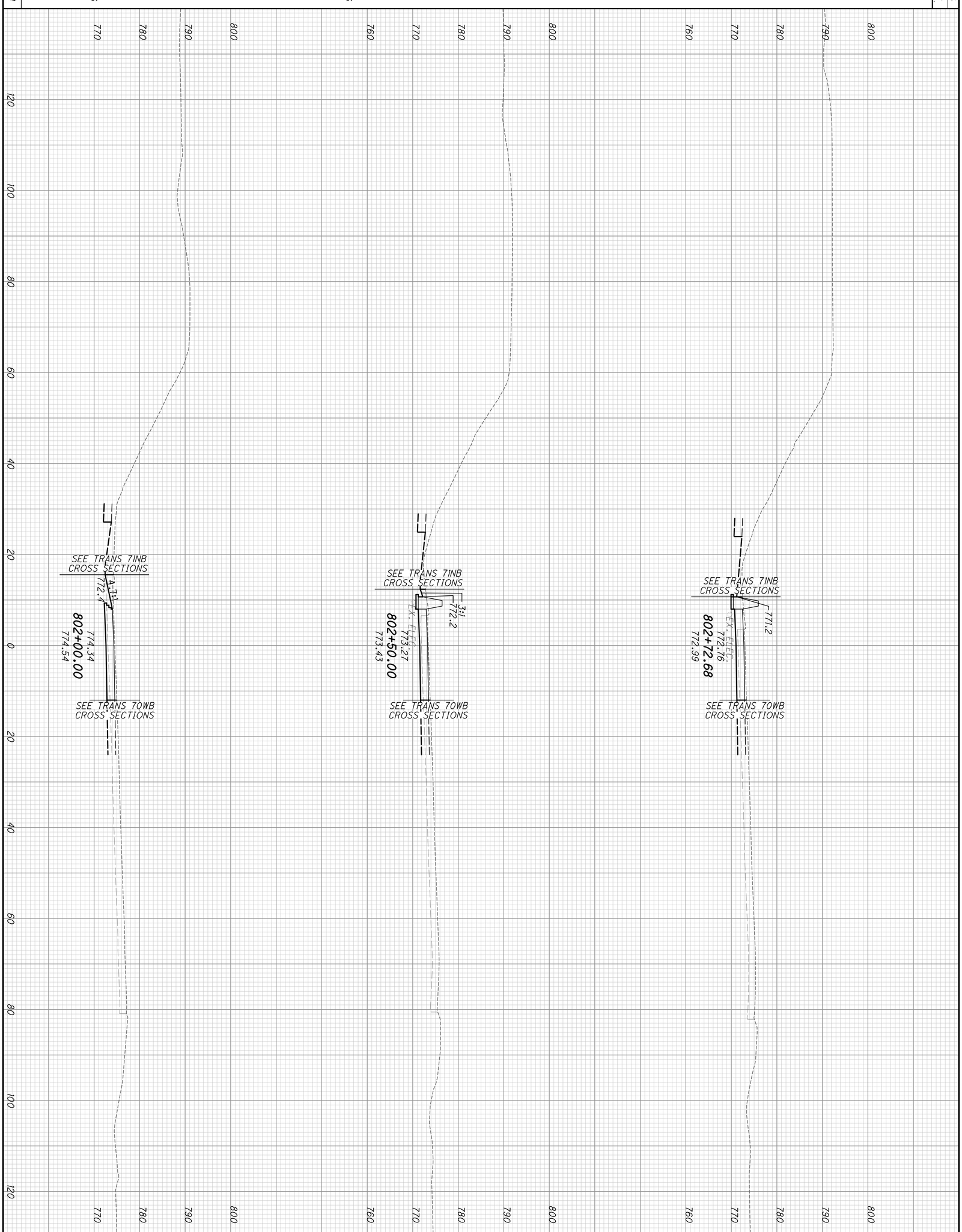

END AREA CUT	END AREA FILL	VOLUME CUT	VOLUME FILL
53	4	104	6
49	0	94	4
48	0	41	0

ms consultants, inc.

832
2317

FRA-70-14.54

CROSS SECTIONS TRANS RAMP P2 (CENTRAL)
STA. 802+00.00 TO STA. 802+72.68

CALCULATED

CHECKED

PLOT.CEL

ms consultants, inc.
msconsultants.com

www.msconsultants.com

Ohio DOT Workspace
70\71 East Interchange 2E

1"
0.5"
0

Batchplot Spec: \\msconsultants.com\files\production\03\60\06634_2E\standards\plotdrv\batchplt.spc
Pen Table: \\msconsultants.com\files\Standards\usth\ohdot\V8i\ms\plotting\pen\V8i_ms_std.tbl PDF: ohdotV8i
Plot Driver: \\msconsultants.com\files\Standards\usth\ohdot\V8i\ms\plotting\PDF.pltcfg PDF: 60-06634_2E_Columbus

34" x 22"

Model: XS_SHEET_217+58.34_TO_218+50.00 Level: FENCE_VIEW1
Printed: 6/19/2018 @ 8:55:11 AM By: jdouglas
File: N:\03\60\06634_2E\roadway\sheets\105221XS102.dgn

SEEDING	
END WIDTH	SQ. YDS.
89	508
93	222
2	0
	730

END AREA		VOLUME	
CUT	FILL	CUT	FILL
242	50	314	124
97	84	115	97
52	42	0	0
		429	221

CALCULATED

CHECKED

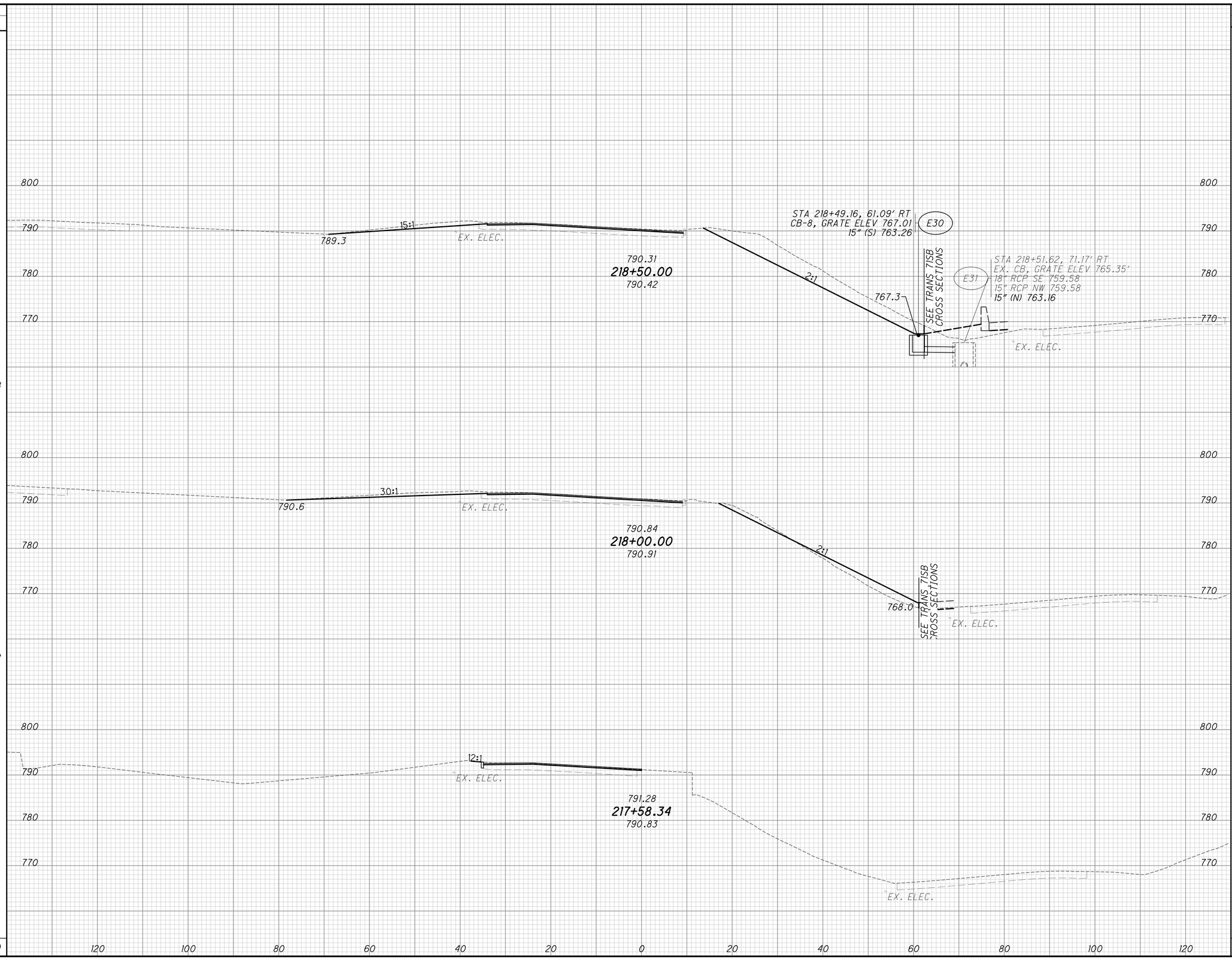

CROSS SECTIONS TRANS I-70 WB (EAST SIDE)
STA. 217+58.34 TO STA. 218+50.00

FRA-70-14.54

833
2317

ms consultants, inc.

PLOT.CEL

ms consultants, inc.
msconsultants.com

www.msconsultants.com

Ohio DOT Workspace
70\71 East Interchange 2E

0 0.5" 1"

PDF: ohdot\V8i
PDF: 60-06634_2E_Columbus

Batchplot Spec: \\msconsultants.com\files\production\03\60\06634_2E\standards\ohdot\v8i\batchplt.spc
Pen Table: \\msconsultants.com\files\Standards\ustn\ohdot\V8i\ms\plotting\pen\V8i_ms_std.tbl
Plot Driver: \\msconsultants.com\files\Standards\ustn\ohdot\v8i\ms\plotting\PDF.pltcfg

Model: XS_SHEET_219+00.00_TO_220+00.00
Printed: 6/19/2018 @ 8:55:11 AM
File: N:\03\60\06634_2E\roadway\sheets\105322FXS102.dgn

Dgn: FENCE_VIEW1
By: jdouglas

34" x 22"

SEEDING END WIDTH	SEEDING SQ. YDS.
	86
	470
	83
	272
	87
	203
	87
	488
	1433

STA. 794+29.76, 25.20' RT
EX. MH T.C. ELEV 788.39
(RTG) ELEV. 787.52
36" RCP E 770.14
36" RCP SW 770.14
21" RCP N 773.31

16032

12282

SEE TRANS P2 CROSS SECTIONS

STA 219+76.44, 43.62' LT
EX. MH, T.C. ELEV 790.46' (RTG) ELEV. 788.45
36" RCP S 765.80
36" RCP NE 769.96
30" RCP N 766.56
15" CPP SE 782.56
12" RCP W 785.46
15" (SW) 782.56

STA 220+04.99, 10.50' RT
EX. MH, GRATE ELEV 787.49'
15" CPP NW 783.32

EX. 12" WATER ABANDONED

EX. ELEC 786.6

6:1

15" CPP

788.64
220+00.00
788.19

3.7:1

772.0

SEE TRANS 7ISB CROSS SECTIONS

EX. ELEC.

36" RCP

STA 219+57.54, 56.71' LT
EX. CB-8, GRATE ELEV 787.85' (TBR)
15" RCP (SE) 785.67

STA 219+65.93, 40.25' LT (TBR)
EX. MH, GRATE ELEV 790.55'
12" RCP E 786.50

E32

STA 219+44.96, 10.08' RT
CB-3A, GRATE ELEV 788.61
15" (NE) 780.32

SEE TRANS P2 CROSS SECTIONS

5.4:1

EX. ELEC.

786.8

62'-15" TYPE B @ 2.50%

789.23
219+50.00
789.00

3:1

770.4

SEE TRANS 7ISB CROSS SECTIONS

EX. ELEC.

EX. 12" WATER IN A 24" CASING PIPE

219+21.11
END OVERLAY
BEGIN FULL-DEPTH PAVEMENT

10.5:1

EX. ELEC.

788.4

789.78
219+00.00
789.78

2.5:1

768.9

SEE TRANS 7ISB CROSS SECTIONS

EX. ELEC.

- APPROXIMATE LOCATION OF CONSTRUCTION DEBRIS TO BE REMOVED, SEE GENERAL NOTES SHEET 83 FOR DETAILS

120 100 80 60 40 20 0 20 40 60 80 100 120

END AREA CUT	END AREA FILL	VOLUME CUT	VOLUME FILL	
305	52			
		583	176	
				AH
		324	138	BK
		306	135	
				AH
		306	135	BK
		560	63	
				AH
		327	145	BK
		339	47	
		307	57	
				AH
		508	99	BK
		1757	467	

CALCULATED

CHECKED

CROSS SECTIONS TRANS I-70 WB (EAST SIDE)
STA. 219+00.00 TO STA. 220+00.00

FRA-70-14.54

834
2317

ms consultants, inc.

PLOT.CEL

ms consultants, inc.
msconsultants.com

www.msconsultants.com

Ohio DOT Workspace
70\71 East Interchange 2E

1"
0.5"
0

Batchplot Spec: \\msconsultants.com\files\production\03\60\06634_2E\standards\plotdir\batchplt.spc
Pen Table: \\msconsultants.com\files\Standards\odot\V8i\ms\plotting\pen\V8i_ms_std.tbl
Plot Driver: \\msconsultants.com\files\Standards\odot\v8i\ms\plotting\PDF.pltcfg
PDF: ohdotV8i
PDF: 60-06634_2E_Columbus

Model: XS_SHEET_220-50.00_TO_221+50.00
Printed: 6/19/2018 @ 8:55:12 AM
File: N:\03\60\06634_2E\roadway\sheets\105221XS102.dgn
Level: FENCE_VIEW1
By: jdouglas

34" x 22"

SEEDING	
END WIDTH	SQ. YDS.
56	286
72	78
72	412
76	450
	1226

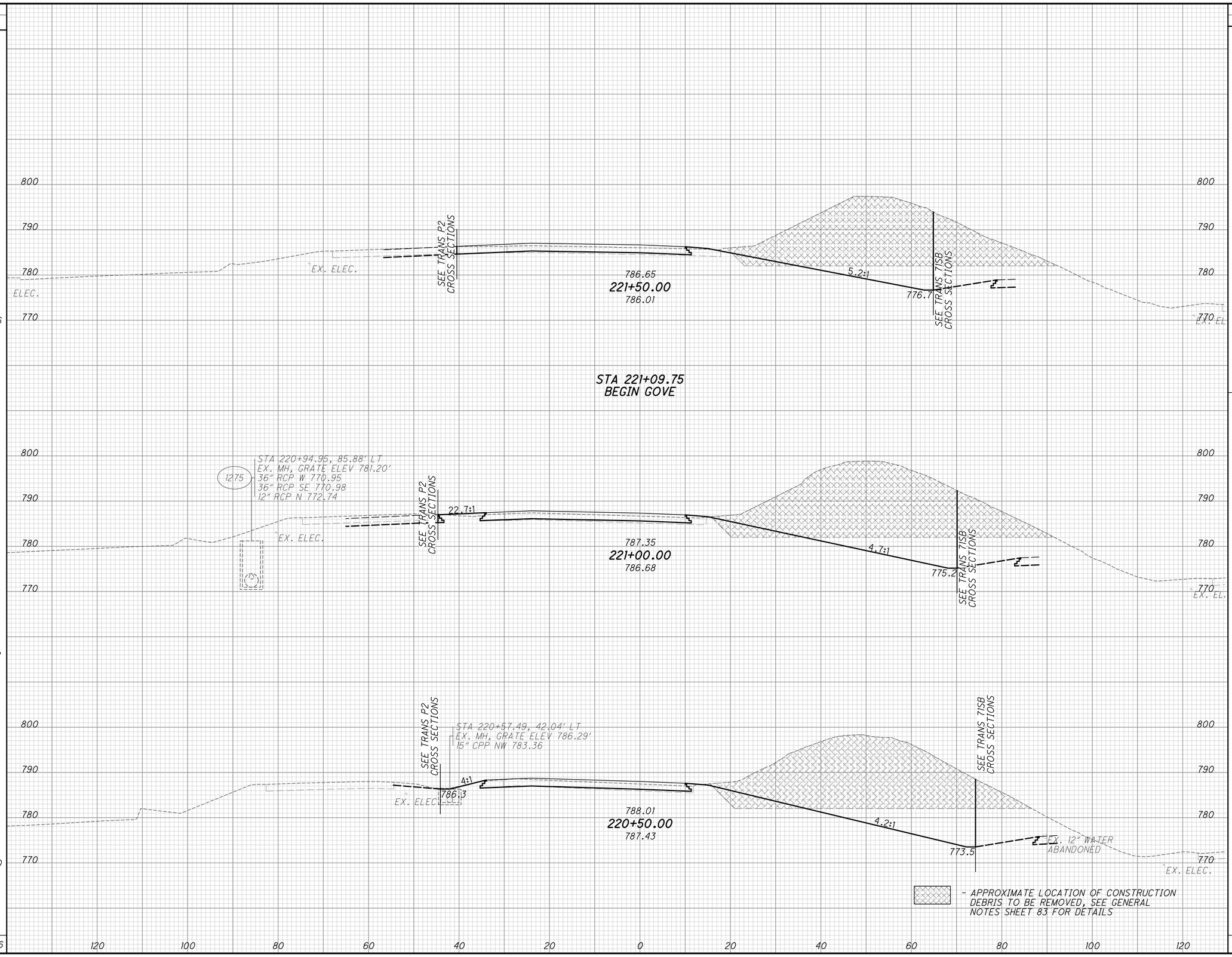

END AREA		VOLUME			CALCULATED	CHECKED
CUT	FILL	CUT	FILL			
174	42					
		285	73			
209	56			AH		
197	60			BK		
		71	22			
		405	104			
197	60					
		240	52			
		505	96			
		1266	295			

CROSS SECTIONS TRANS I-70 WB (EAST SIDE)
STA. 220+50.00 TO STA. 221+50.00

FRA-70-14.54

835
2317

ms consultants, inc.

PLOT.CEL

ms consultants, inc.
msconsultants.com

www.msconsultants.com

Ohio DOT Workspace
70\71 East Interchange 2E

0 0.5" 1"

Batchplot Spec: \\msconsultants.com\files\production\03\60\06634_2E\standards\plotdrv\batchplt.spc
Pen Table: \\msconsultants.com\files\Standards\ustn\ohdot\V8i\ms\plotting\pen\V8i_ms_std.tbl PCF: ohdot_V8i
Plot Driver: \\msconsultants.com\files\Standards\ustn\ohdot\v8i\ms\plotting\PDF.pltcfg PCF: 60-06634_2E_Columbus

Model: XS_SHEET_222+00.00_TO_223+00.00 Ref: FENCE_VIEW1
Printed: 6/19/2018 @ 8:55:13 AM By: jdouglas
File: N:\03\60\06634_2E\roadway\sheets\105322TXS102.dgn

34" x 22"

SEEDING	
END WIDTH	SQ. YDS.
34	212
42	252
49	291
	755

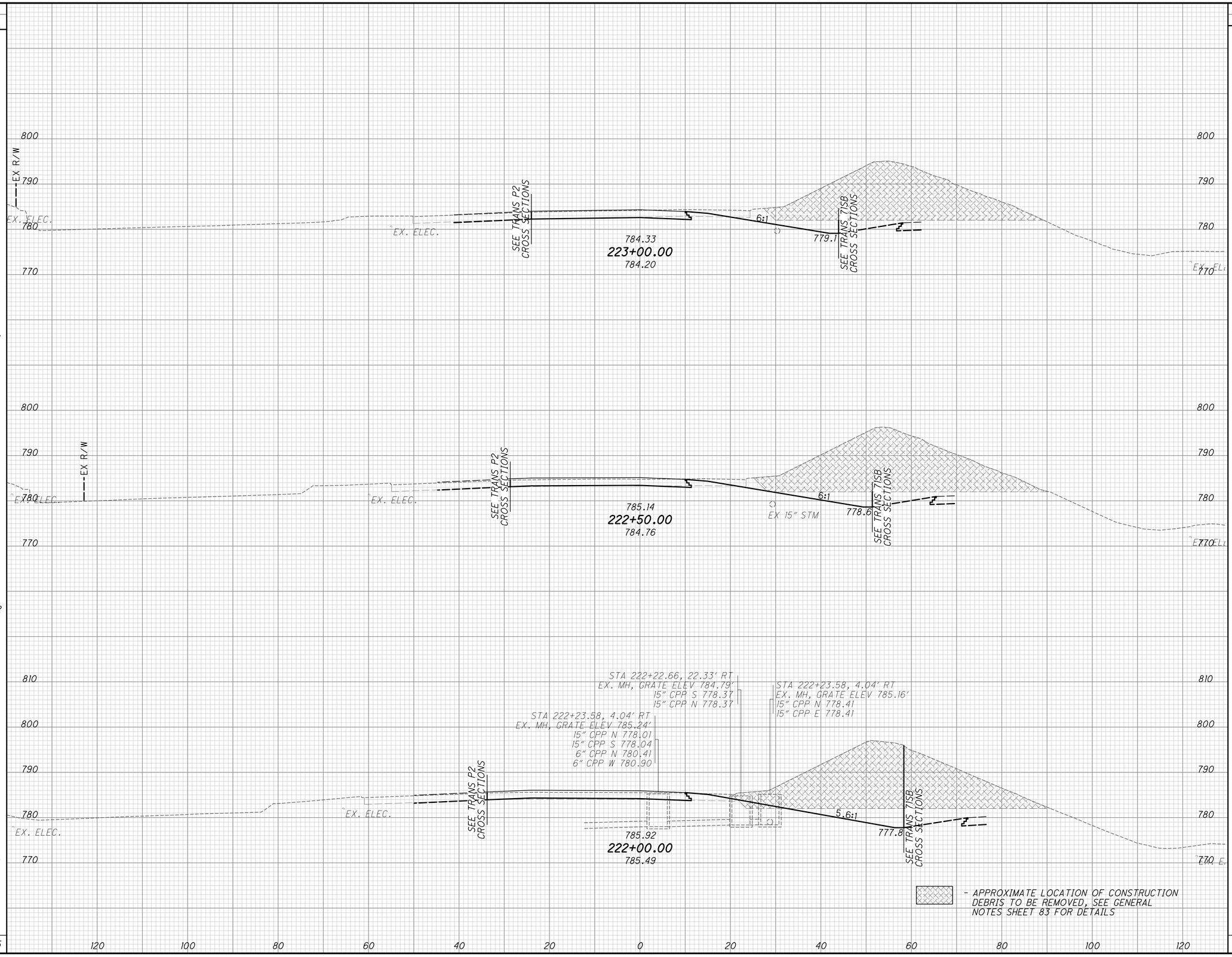

END AREA		VOLUME	
CUT	FILL	CUT	FILL
122	6		
128	12		
141	28	232	16
		249	37
		292	64
		773	117

CALCULATED

CHECKED

CROSS SECTIONS TRANS I-70 WB (EAST SIDE)
STA. 222+00.00 TO STA. 223+00.00

FRA-70-14.54

836
2317

ms consultants, inc.

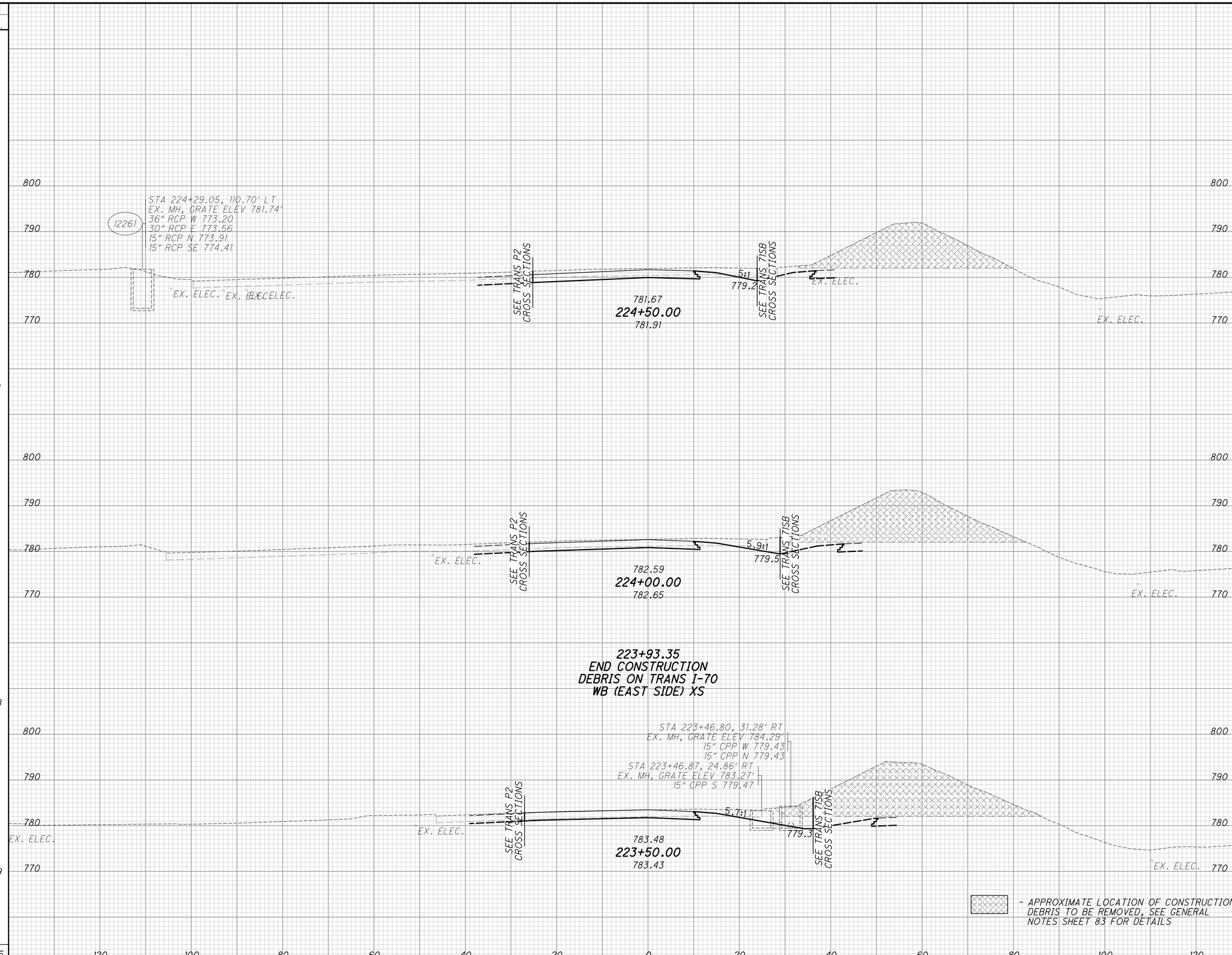

SEEDING END WIDTH	SEEDING SQ. YDS.	END AREA CUT	END AREA FILL	VOLUME CUT	VOLUME FILL
14		105	3		
	92			201	7
19		111	4		
	17			27	1
26		111	4	AH	
	128	122	5	BK	
26				197	8
	169	122	5		
				226	10
	406			651	26

- APPROXIMATE LOCATION OF CONSTRUCTION DEBRIS TO BE REMOVED, SEE GENERAL NOTES SHEET 83 FOR DETAILS

CALCULATED

CHECKED

CROSS SECTIONS TRANS I-70 WB (EAST SIDE)
STA. 223+50.00 TO STA. 224+50.00

FRA-70-14.54

837
2317

ms consultants, inc.

PLOT.CEL

ms consultants, inc.
msconsultants.com

Ohio DOT Workspace
70\71 East Interchange 2E

www.msconsultants.com

Batchplot Spec: \\msconsultants.com\files\production\03\60\06634_2E\standards\plotdrv\batchplt.spc
Pen Table: \\msconsultants.com\files\Standards\ustn\ohdot\V8i\ms\plotting\pen\V8i_ms_std.tbl
Plot Driver: \\msconsultants.com\files\Standards\ustn\ohdot\v8i\ms\plotting\PDF.pltcfg

34" x 22"

Model: XS_SHEET_223+50.00_TO_224+50.00 By: FENCE_VIEW1
Printed: 6/19/2018 @ 8:55:14 AM By: jdouglas
File: N:\03\60\06634_2E\roadway\sheets\1053227XS102.dgn

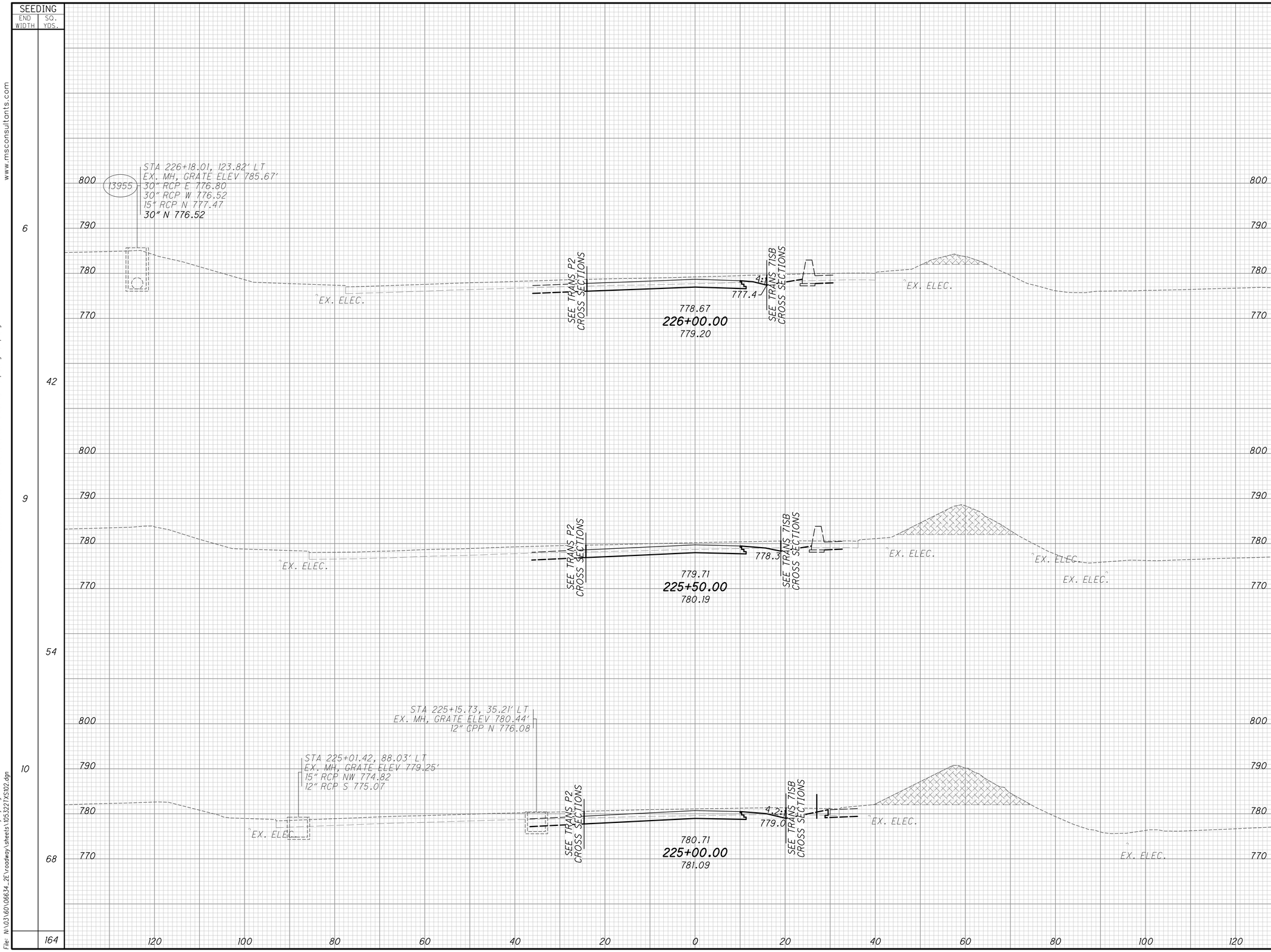

END AREA CUT	END AREA FILL	VOLUME CUT	VOLUME FILL
96	1		
		182	3
101	2		
		189	5
103	3		
		193	6
		564	14

CALCULATED

CHECKED

CROSS SECTIONS TRANS I-70 WB (EAST SIDE)
STA. 225+00.00 TO STA. 226+00.00

FRA-70-14.54

838
2317

ms consultants, inc.

PLOT.CEL

ms consultants, inc.
msconsultants.com

Ohio DOT Workspace
70\71 East Interchange 2E
www.msconsultants.com

Batchplot Spec: \\msconsultants.com\files\production\03\60\06634_2E\standards\plotdrv\batchplt.spc
Pen Table: \\msconsultants.com\files\Standards\ustn\ohdot\V8i\ms\plotting\pen\V8i_ms_std.tbl
Plot Driver: \\msconsultants.com\files\Standards\ustn\ohdot\v8i\ms\plotting\PDF.pltcfg

34" x 22"

Model: XS_SHEET_225+00.00_TO_226+00.00 Div: FENCE_VIEW1
Printed: 6/19/2018 @ 8:55:15 AM By: jdouglas
File: N:\03\60\06634_2E\roadway\sheets\105322TXS102.dgn

PLOT.CEL

ms consultants, inc.
msconsultants.com

www.msconsultants.com

Ohio DOT Workspace
70\71 East Interchange 2E

0 0.5" 1"

Batchplot Spec: \\msconsultants.com\files\production\03\60\06634_2E\standards\plotdrv\batchplt.spc
Pen Table: \\msconsultants.com\files\Standards\usth\ohdot\V8i\ms\plotting\pen\V8i_ms_std.tbl PCF: ohdotV8i
Plot Driver: \\msconsultants.com\files\Standards\usth\ohdot\v8i\ms\plotting\PDF.pltcfg PCF: 60-06634_2E_Columbus

Model: XS_SHEET_226-50.00_TO_227+50.dgn Ref: FENCE_VIEW1
Printed: 6/19/2018 @ 8:55:16 AM By: jdouglas
File: N:\03\60\06634_2E\roadway\sheets\105322FXS102.dgn

34" x 22"

SEEDING	
END WIDTH	SQ. YDS.
9	45
7	38
6	34
	117

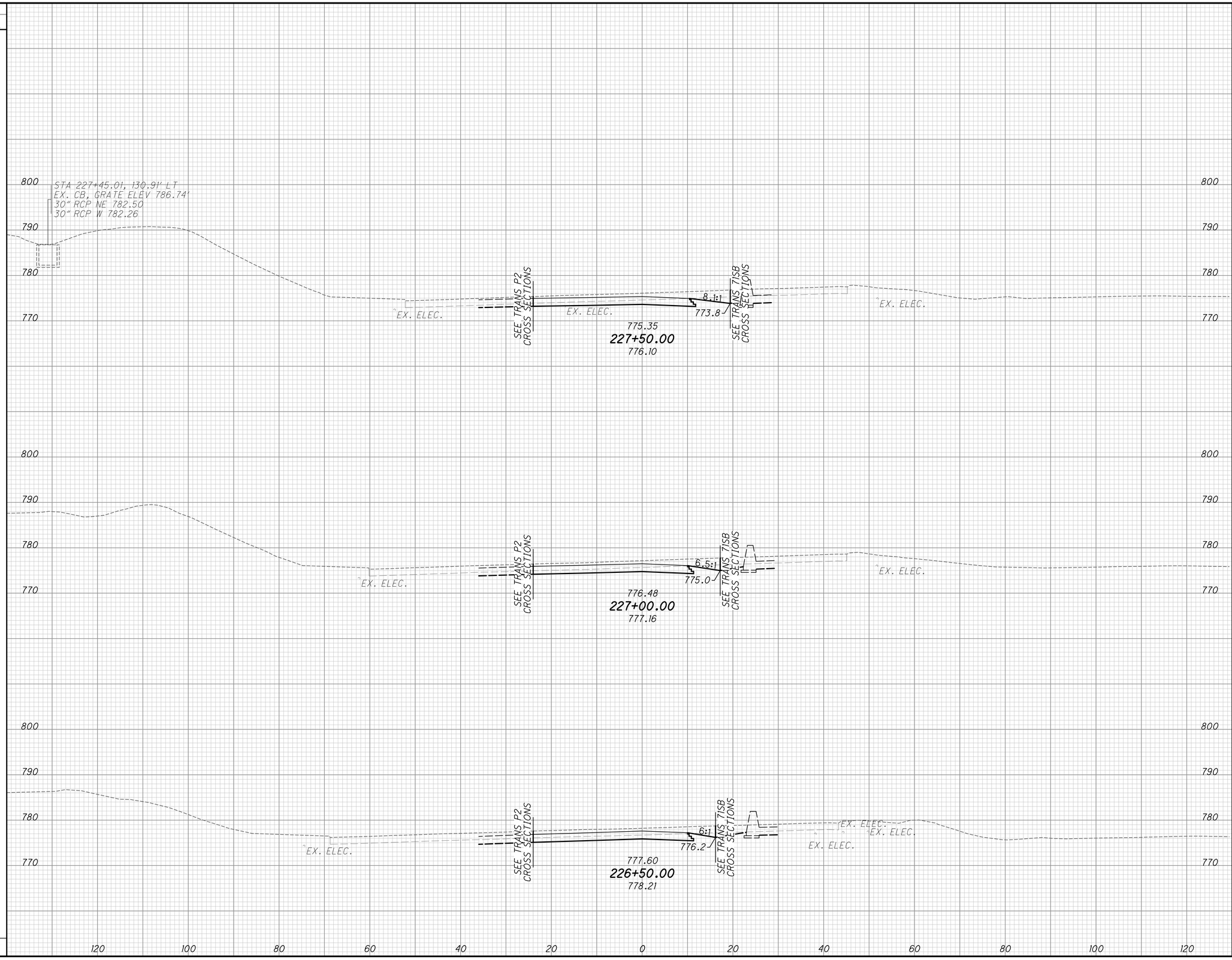

END AREA		VOLUME	
CUT	FILL	CUT	FILL
108	1		
101	1		
99	1		
		193	2
		185	2
		180	2
		558	6

CALCULATED

CHECKED

CROSS SECTIONS TRANS I-70 WB (EAST SIDE)
STA. 226+50.00 TO STA. 227+50.00

FRA-70-14.54

839
2317

ms consultants, inc.

PLOT.CEL

ms consultants, inc.
msconsultants.com

www.msconsultants.com

Ohio DOT Workspace
70\71 East Interchange 2E

1" 0.5" 0

PDF: ohdot\V8i
PDF: 60-06634_2E_Columbus

Batchplot Spec: \\vnsconsultants.com\files\production\03\60\06634_2E\standards\plotdir\batchplt.spc
Pen Table: \\vnsconsultants.com\files\Standards\ustn\ohdot\V8\ms\plotting\pen\V8i_ms_std.tbl
Plot Driver: \\vnsconsultants.com\files\Standards\ustn\ohdot\V8\ms\plotting\PDF.pltcfg

Model: XS_SHEET_228+00.00_TO_229+00.00
Printed: 6/19/2018 @ 8:55:17 AM
File: N:\03\60\06634_2E\roadway\sheets\105322TXS102.dgn

34" x 22"

SEEDING END WIDTH	SEEDING SQ. YDS.
	3
	17
	3
	33
	8
	48
	98

STA 228+88.74, 18.28' RT
I-3-C, GRATE ELEV 771.03
15" (S) 765.70
E7

E8
STA 227+50.00, 15.40' RT
I-3-C, GRATE ELEV 770.98
15" (N) 764.84

STA 902+97.75, 20.37' LT
MH-3, RIM ELEV 768.23
15" (N) 763.28
O347

STA 229+21.05, 32.08' LT
EX. MH, GRATE ELEV 771.69'
15" CPP S 768.06

SEE RAMP P2 CROSS SECTIONS

SEE TRANS 7ISB CROSS SECTIONS

25:1

EX. ELEC.

EX. ELEC. 15" CPP

771.96
229+00.00
772.80

771.5

34'-15" TYPE B @ 2.5%

61'-15" TYPE B @ 2.56%

STA 228+73.97, 133.62' LT
EX. SAN MH, GRATE ELEV 792.07'
8" VCP SE 780.12
8" VCP N 780.02

STA 228+71.91, 49.88' RT
EX. MH, GRATE ELEV 775.10'
12" CPP E 769.10
6" CPP N 769.25

SEE RAMP P2 CROSS SECTIONS

EX. ELEC.

EX. ELEC.

10:1

772.0

773.09
228+50.00
773.90

SEE TRANS 7ISB CROSS SECTIONS

SEE TRANS P2 CROSS SECTIONS

EX. ELEC.

EX. ELEC.

10:1

772.9

774.22
228+00.00
774.97

SEE TRANS 7ISB CROSS SECTIONS

END AREA CUT	END AREA FILL	VOLUME CUT	VOLUME FILL
153	3	293	5
163	2	257	3
115	1	206	2
		756	10

CALCULATED

CHECKED

CROSS SECTIONS TRANS I-70 WB (EAST SIDE)
STA. 228+00.00 TO STA. 229+00.00

FRA-70-14.54

840
2317

ms consultants, inc.

34" x 22"

Model: XS_SHEET_229+50.00_TO_230+50.00 View: FENCE_VIEW1
Printed: 6/19/2018 @ 8:55:18 AM By: jdouglas
File: N:\03\60\06634_2E\roadway\sheets\105322TXS102.dgn

Batchplot Spec: \\msconsultants.com\files\production\03\60\06634_2E\standards\plotdrv\batchplt.spc
Pen Table: \\msconsultants.com\files\Standards\ustn\ohdot\V8i\ms\plotting\pen\V8i_ms_std.tbl
Plot Driver: \\msconsultants.com\files\Standards\ustn\ohdot\v8i\ms\plotting\PDF.pltcfg

PCF: ohdotV8i
PCF: 60-06634_2E_Columbus

0 0.5" 1"

Ohio DOT Workspace
70\71 East Interchange 2E

PLOT.CEL

ms consultants, inc.
msconsultants.com

www.msconsultants.com

SEEDING

END WIDTH	SQ. YDS.
7	0
7	0
0	0

STA 230+44.84, 114.67' LT
EX. SAN MH, GRATE ELEV 791.41'
10" VCP N 787.06
10" VCP N 789.32
8" VCP E 786.38
8" VCP W 786.38

EX. ELEC.
EX. 12" WATER
EX. ELEC.
EX. ELEC.

SEE RAMP P2 CROSS SECTIONS

SEE RAMP P2 CROSS SECTIONS

SEE RAMP P2 CROSS SECTIONS

EX. ELEC.
EX. ELEC.
EX. ELEC.

229+50.00
770.83
771.60

230+00.00
769.80
770.54

230+50.00
768.94
769.62

EX. ELEC.
EX. ELEC.
EX. ELEC.

SEE TRANS 7ISB CROSS SECTIONS

SEE TRANS 7ISB CROSS SECTIONS

SEE TRANS 7ISB CROSS SECTIONS

STA 229+27.26, 59.33' RT.
EX. CB, GRATE ELEV 771.60'
15" CPP N 767.60
15" RCP S 767.52
12" CPP SE 768.72
12" RCP W 768.39

EX. ELEC.
EX. ELEC.
EX. ELEC.

STA 229+53.39, 67.58' RT.
EX. MH, GRATE ELEV 772.50'
12" CPP NW 768.76

EX. ELEC.

END AREA CUT	END AREA FILL	VOLUME CUT	VOLUME FILL
138	0	743	3
128	0	269	3
118	0	246	0
		228	0

FRA-70-14.54

CROSS SECTIONS TRANS I-70 WB (EAST SIDE)
STA. 229+50.00 TO STA. 230+50.00

841
2317

CALCULATED

CHECKED

ms consultants, inc.

PLOT.CEL

ms consultants, inc.
msconsultants.com

www.msconsultants.com

Ohio DOT Workspace
70\71 East Interchange 2E

1" 0.5" 0

PDF: ohdot\V8i
PDF: 60-06634_2E_Columbus

Batchplot Spec: \\msconsultants.com\files\production\03\60\06634_2E\standards\plotdir\batchplt.spc
Pen Table: \\msconsultants.com\files\Standards\ustn\ohdot\V8i\ms\plotting\pen\V8i_ms_std.tbl
Plot Driver: \\msconsultants.com\files\Standards\ustn\ohdot\v8i\ms\plotting\PDF.pltcfg

Model: XS_SHEET_231+00.00_TO_232+00.00
Printed: 6/19/2018 @ 8:55:19 AM
File: N:\03\60\06634_2E\roadway\sheets\105322TXS102.dgn

View: FENCE_VIEW1
By: jdouglas

34" x 22"

SEEDING	
END WIDTH	SQ. YDS.
0	0
0	0
0	0
0	0

END AREA		VOLUME	
CUT	FILL	CUT	FILL
82	0		
158	0		
89	0		
174	0		
100	0		
202	0		
		534	0

CALCULATED

CHECKED

STA 906+00.00, 24.30' RT
I-3-C, GRATE ELEV 766.16
15" (N) 761.65
P210

STA 905+99.18, 12.95' RT
MH-3, RIM ELEV 763.52
15"(S) 761.58
21" (E) 761.08
107

SEE RAMP P2 CROSS SECTIONS

STA 232+22.26, 29.25' LT
EX. CB, GRATE ELEV 765.68'
15" CPP E 762.39
12" CPP S 762.43
6" CPP S 763.37

STA 232+21.38, 16.80' LT
EX. CB, GRATE EL. 766.74'
12" CPP W 762.69
12" CPP N 762.44

SEE TRANS 71SB CROSS SECTIONS

STA 806+00.00, 3.14' LT
I-3-B, GRATE ELEV 766.65
15" (N) 762.27
15" (E) 762.27
120A

EX. ELEC.
EX. ELEC.

12" CPP

767.48
232+00.00
767.86

13'-15" TYPE B @ 0.55%
79'-21" TYPE B @ 2.52%

34'-15" TYPE B @ 1.63%

E5
STA 231+81.91, 11.67' RT
I-3-C1, GRATE ELEV 767.20
15" (S) 762.82

EX R/W
EX GEN R/W
EX LA-R/W

EX. 12" WATER

STA 231+71.99, 19.20' LT
EX. MH, GRATE ELEV 767.54'
12" CPP E 763.34

767.79
231+50.00
768.13

768.27
231+00.00
768.70

EX. ELEC.

CROSS SECTIONS I-70 WB (EAST SIDE)
STA. 231+00.00 TO STA. 232+00.00

FRA-70-14.54

842
2317

ms consultants, inc.

PLOT.CEL

ms consultants, inc.
msconsultants.com

Ohio DOT Workspace
70\71 East Interchange 2E
www.msconsultants.com

1"
0.5"
0

Batchplot Spec: \\msconsultants.com\files\production\03\60\06634_2E\standards\plotdir\batchplt.spc
Pen Table: \\msconsultants.com\files\Standards\ustn\ohdot\V8i\ms\plotting\pen\V8i_ms_std.tbl PCF: ohdotV8i
Plot Driver: \\msconsultants.com\files\Standards\ustn\ohdot\v8i\ms\plotting\PDF.pltcfg PCF: 60-06634_2E_Columbus

34" x 22"

Model: XS_SHEET_232-50.00_TO_233-50.00 Level: FENCE_VIEW1
Printed: 6/19/2018 @ 8:55:20 AM By: jdouglas
File: N:\03\60\06634_2E\roadway\sheets\105227XS102.dgn

SEEDING	
END WIDTH	SQ. YDS.
0	0
0	0
0	0

END AREA		VOLUME	
CUT	FILL	CUT	FILL
91	0		
		170	0
93	0		
		157	0
77	0		
		148	0
		475	0

CALCULATED

CHECKED

EX LA-R/W

EX R/W

EX LA-R/W

WATER

EX LA-R/W

EX. 12" WATER

790
780
770
760
800

STA 232+53.16, 94.45' LT
EX. SAN MH, GRATE ELEV 794.69'
8" VCP W 787.42
8" VCP E 787.42
8" VCP N 787.42

STA 232+52.66, 103.81' LT
EX. SAN MH, GRATE ELEV 794.62'
8" VCP S 787.47
8" VCP N 787.47

STA 906+78.04, 21.66' RT
MH-3, A.P.P. "A"
RIM ELEV 766.80
21" (W) 759.08
22" X 34" (NE) 758.58
36" (S) 757.83
6" (SE) 765.72 T.D.

69

22" X 34" TYPE B

SEE RAMP P2 CROSS SECTIONS

SEE RAMP P2 CROSS SECTIONS

SEE TRANS 7ISB CROSS SECTIONS

SEE TRANS 7ISB CROSS SECTIONS

767.69
233+50.00
768.17

767.42
233+00.00
767.95

767.36
232+50.00
767.80

STA 232+31.15, 29.21' LT
EX. MH, GRATE ELEV 766.35'
36" RCP S 760.70
27" RCP E 761.15
15" CPP W 761.90
12" CPP SE 762.45

STA 232+70.82, 19.40' LT
EX. MH, GRATE ELEV 767.67'
12" CPP NW 763.87

36" RCP

60'-22" X 34" TYPE B @ 3.98%

79'-21" TYPE B @ 2.52%

48'-36" TYPE B @ 0.29%

E6

STA 233+40.10, 15.49' RT
I-3-C1, GRATE ELEV 766.76
15" (S) 762.29

120B

STA 807+58.32, 2.95' RT
I-3-C1, GRATE ELEV 766.37
15" (N) 761.03

EX. ELEC.

33'-15" TYPE B @ 3.79%

E4

STA 232+55.39, 10.50' RT
I-3-C1, GRATE ELEV 767.00
36" (N) 757.69
36" (S) 757.69

120

STA 806+73.35, 2.99' LT
I-3-B, GRATE ELEV 766.10
36" (N) 757.58
36" (S) 757.58
15" (W) 759.33
15" (E) 759.33

EX. ELEC.
EX. ELEC.

34'-36" TYPE B @ 0.33%

STA 233+79,
EX. CB, GRATE
15" CPP W 763.8
12" CPP E 764.1

STA 233+04.95, 116.04' RT
EX. MH, GRATE ELEV 768.72'
15" CPP E 763.69
15" CPP W 763.64

EX. ELEC.
EX. ELEC.

15" TYPE B

STA 232+30.29, 120.47' RT
EX. MH, GRATE ELEV 769.19'
36" RCP SW 760.19
36" RCP N 760.19
18" RCP S 764.24
15" RCP NE 763.89
15" CPP E 763.21

55'-36" TYPE B @ 0.38%

0 120 100 80 60 40 20 0 20 40 60 80 100 120

CROSS SECTIONS TRANS I-70 WB (EAST SIDE)
STA. 232+50.00 TO STA. 233+50.00

FRA-70-14.54

843
2317

ms consultants, inc.

34" x 22"

Model: XS_SHEET_234+00.00_TO_235+00.00
Printed: 6/19/2018 @ 8:55:20 AM By: jdouglas
File: N:\03\60\06634_2E\roadway\sheets\105322TXS102.dgn

Level: FENCE_VIEW1

Batchplot Spec: \\msconsultants.com\files\production\03\60\06634_2E\standards\plotdrv\batchplt.spc
Pen Table: \\msconsultants.com\files\Standards\ustn\ohdot\V8i\ms\plotting\pen\V8i_ms_std.tbl
Plot Driver: \\msconsultants.com\files\Standards\ustn\ohdot\v8i\ms\plotting\PDF.pltcfg

PCF: ohdotV8i
PCF: 60-06634_2E_Columbus

Ohio DOT Workspace
70\71 East Interchange 2E

PLOT.CEL

ms consultants, inc.
msconsultants.com

www.msconsultants.com

SEEDING: END WIDTH | SQ. YDS.

EX LA-R/W

EX. 12" WATER

EX LA-

EX. 12" WATER

STA 234+82.09, 113.06' LT
EX. MH, GRATE ELEV 791.65'
12" RCP W 787.35
15" RCP S 787.30

EX SW

EX LA-R/W

STA 234+92.15, 37.78' LT
EX. MH, GRATE ELEV 767.74'
27" RCP W 762.54
24" RCP E 762.64
15" CMP N 763.74
12" RCP SE 764.39

SEE RAMP P2 CROSS SECTIONS

SEE RAMP P2 CROSS SECTIONS

SEE RAMP P2 CROSS SECTIONS

234+00.00
767.99
768.64

234+50.00
768.29
769.09

235+00.00
768.60
769.24

SEE TRANS 7ISB CROSS SECTIONS

SEE TRANS 7ISB CROSS SECTIONS

SEE TRANS 7ISB CROSS SECTIONS

EX. ELEC.

EX. ELEC.

EX. ELEC.

STA 234+78.62
EX. MH, GRATE
12" CPP W 764.

END AREA: CUT | FILL

98 | 100 | 94

VOLUME: CUT | FILL

175 | 183 | 179

537

844
2317

FRA-70-14.54

CROSS SECTIONS TRANS I-70 WB (EAST SIDE)
STA. 234+00.00 TO STA. 235+00.00

CALCULATED

CHECKED

ms consultants, inc.

PLOT.CEL

ms consultants, inc.
msconsultants.com

Ohio DOT Workspace
70\71 East Interchange 2E
www.msconsultants.com

Batchplot Spec: \\msconsultants.com\files\production\03\60\06634_2E\standards\plotdrv\batchplt.spc
Pen Table: \\msconsultants.com\files\Standards\ustn\ohdot\V8i\ms\plotting\pen\V8i_ms_std.tbl
Plot Driver: \\msconsultants.com\files\Standards\ustn\ohdot\v8i\ms\plotting\PDF.pltcfg

34" x 22"

Model: XS_SHEET_235+50.00_TO_236+50.00 Div: FENCE_VIEW1
Printed: 6/19/2018 @ 8:55:21 AM By: jdouglas
File: N:\03\60\06634_2E\roadway\sheets\105322TXS102.dgn

SEEDING END WIDTH	SEEDING SQ. YDS.	END AREA CUT	END AREA FILL	VOLUME CUT	VOLUME FILL
0		76	0		
	0			141	0
0		77	0		
	0			151	0
0		86	0		
	0			166	0
	0			458	0

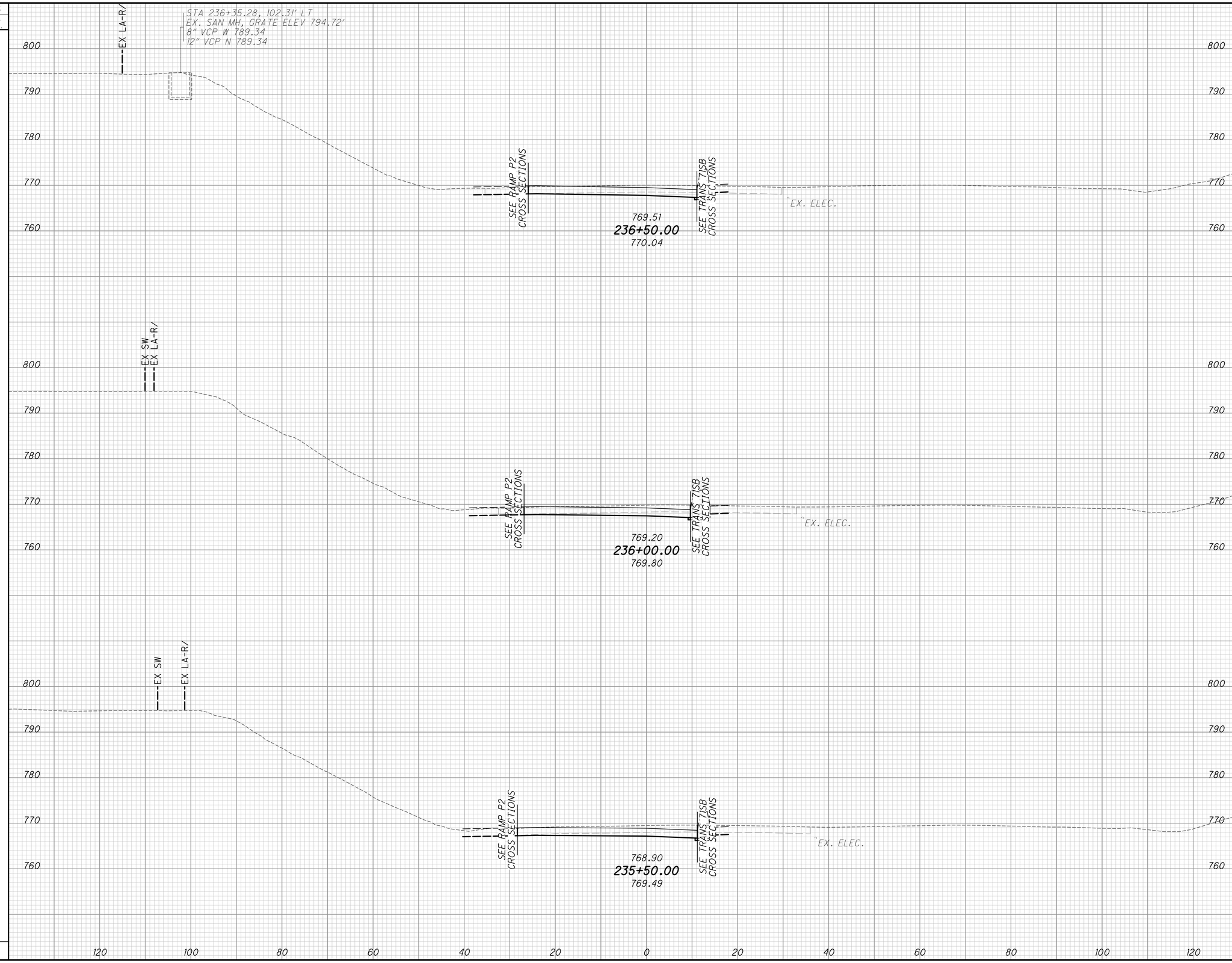

CALCULATED

CHECKED

CROSS SECTIONS TRANS I-70 WB (EAST SIDE)
STA. 235+50.00 TO STA. 236+50.00

FRA-70-14.54

845
2317

ms consultants, inc.

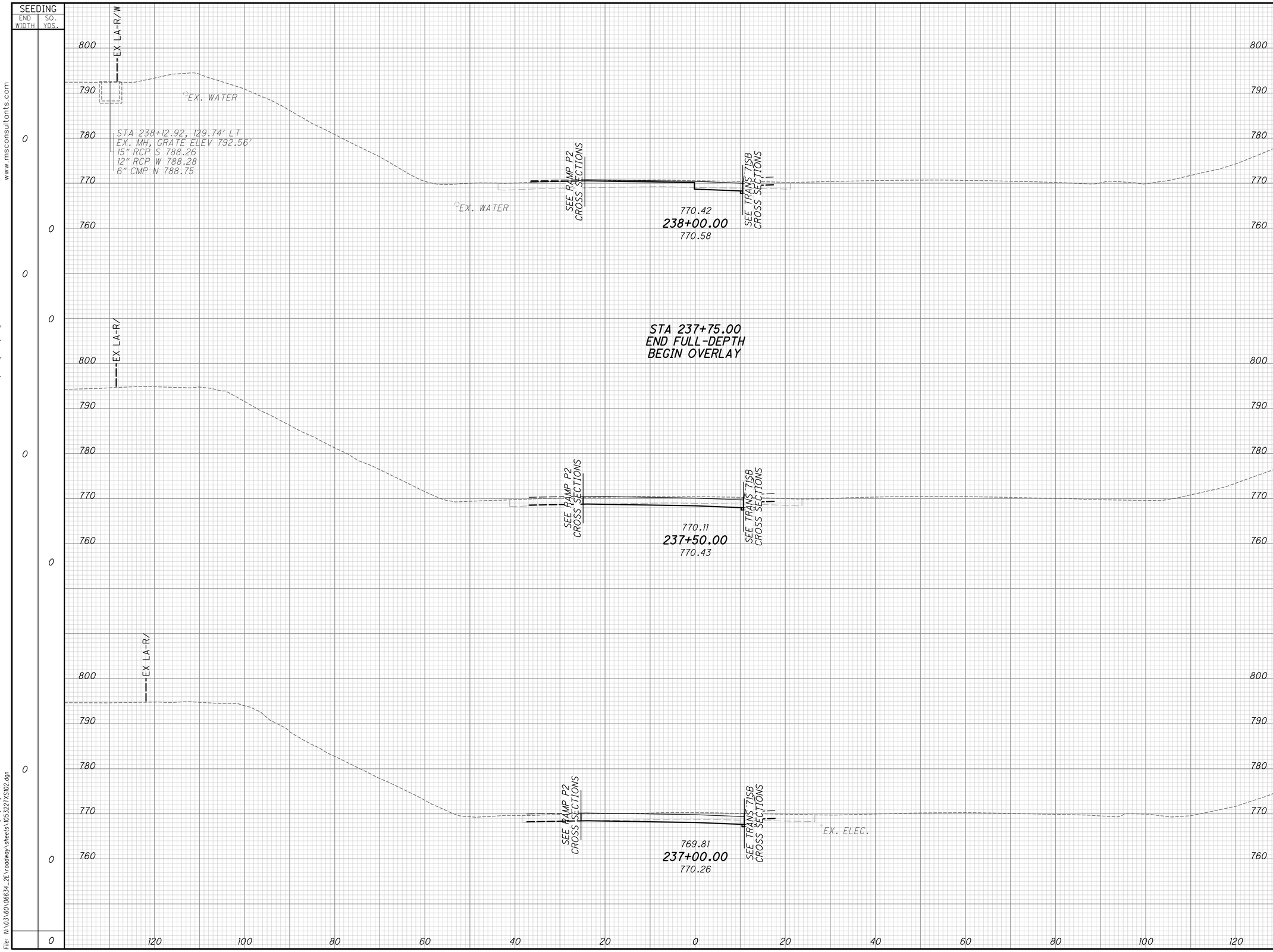

END AREA CUT	END AREA FILL	VOLUME CUT	VOLUME FILL
21	0		
		20	0
21	0	AH	
69	0	BK	
		64	0
69	0		
		131	0
73	0		
		137	0
		352	0

CALCULATED

CHECKED

CROSS SECTIONS TRANS I-70 WB (EAST SIDE)
STA. 237+00.00 TO STA. 238+00.00

FRA-70-14.54

846
2317

ms consultants, inc.

PLOT.CEL

ms consultants, inc.
msconsultants.com

Ohio DOT Workspace
70\71 East Interchange 2E
www.msconsultants.com

Batchplot Spec: \\msconsultants.com\files\production\03\60\06634_2E\standards\plotdrv\batchplt.spc
Pen Table: \\msconsultants.com\files\Standards\ustn\ohdot\V8i\ms\plotting\pen\V8i_ms_std.tbl
Plot Driver: \\msconsultants.com\files\Standards\ustn\ohdot\v8i\ms\plotting\PDF.pltcfg

34" x 22"

Model: XS_SHEET_237+00.00_TO_238+00.00
Printed: 6/19/2018 @ 8:55:22 AM By: jdouglas
File: N:\03\60\06634_2E\roadway\sheets\105322TXS102.dgn

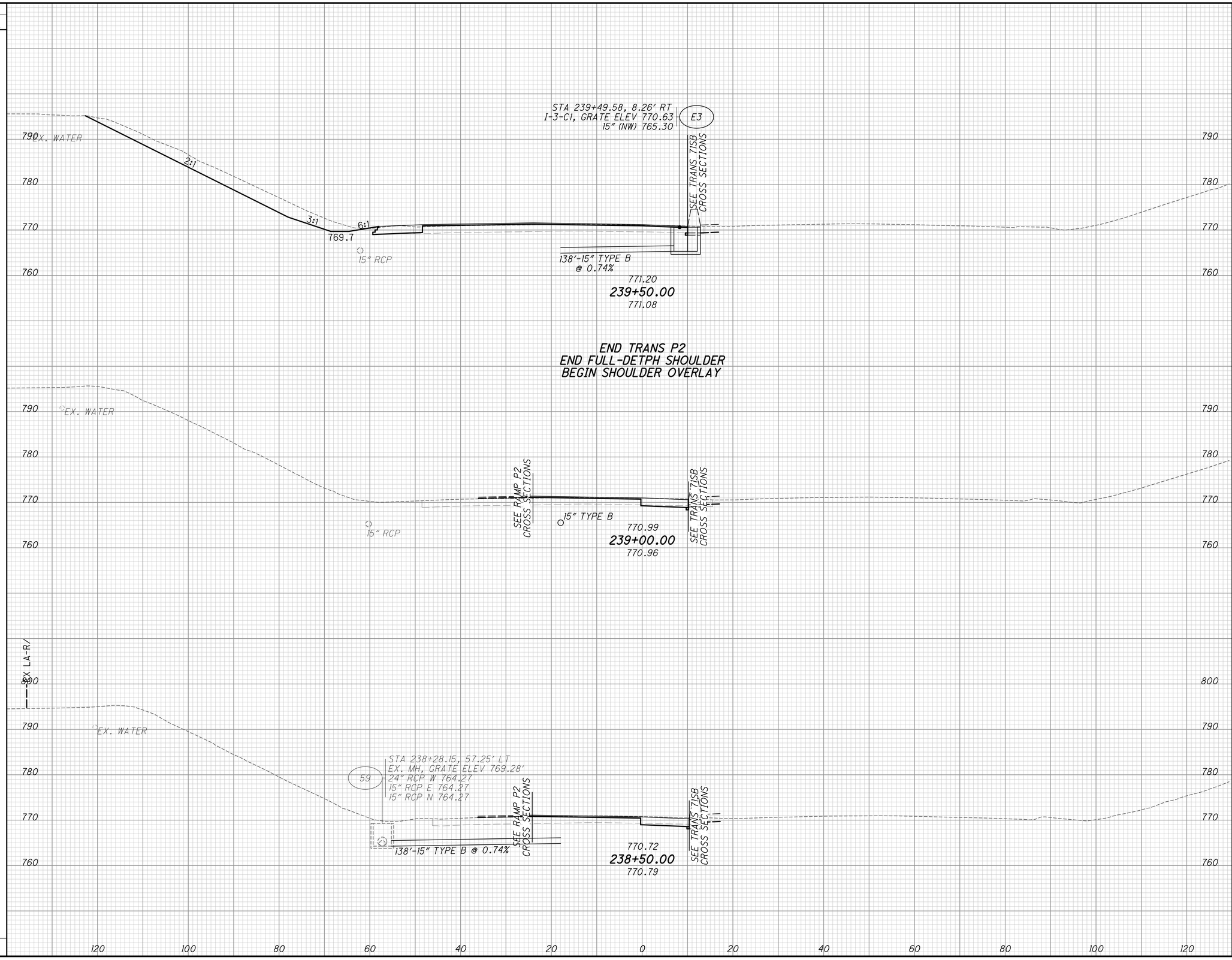

END AREA CUT	END AREA FILL	VOLUME CUT	VOLUME FILL
162	1	AH	
17	0	BK	
		34	0
19	0		
		36	0
20	0		
		39	0
		109	0

CALCULATED

CHECKED

CROSS SECTIONS TRANS I-70 WB (EAST SIDE)
STA. 238+50.00 TO STA. 239+50.00

FRA-70-14.54

847
2317

ms consultants, inc.

PLOT.CEL

ms consultants, inc.
msconsultants.com

Ohio DOT Workspace
70\71 East Interchange 2E
www.msconsultants.com

Batchplot Spec: \\msconsultants.com\files\production\03\60\06634_2E\standards\plotdrv\batchplt.spc
Pen Table: \\msconsultants.com\files\Standards\ustn\ohdot\V8i\ms\plotting\pen\V8i_ms_std.tbl
Plot Driver: \\msconsultants.com\files\Standards\ustn\ohdot\v8i\ms\plotting\PDF.pltcfg

34" x 22"

Model: XS_SHEET_238+50.00_TO_239+50.00 Div: FENCE_VIEW1
Printed: 6/19/2018 @ 8:55:23 AM By: jdouglas
File: N:\03\60\06634_2E\roadway\sheets\105322TXS102.dgn

34" x 22"

Model: XS_SHEET_240+00.00_TO_241+00.00
Printed: 6/19/2018 @ 8:55:24 AM By: jdouglas
File: N:\03\60\06634_2E\roadway\sheets\105322TXS102.dgn

View: FENCE_VIEW1

Batchplot Spec: \\msconsultants.com\files\production\03\60\06634_2E\standards\plotdrv\batchplt.spc
Pen Table: \\msconsultants.com\files\Standards\ustn\ohdot\V8i\ms\plotting\pen\V8i_ms_std.tbl
Plot Driver: \\msconsultants.com\files\Standards\ustn\ohdot\v8i\ms\plotting\PDF.pltcfg

PCF: ohdotV8i
PCF: 60-06634_2E_Columbus

0 1" 0.5"

Ohio DOT Workspace
70\71 East Interchange 2E

PLOT.CEL

ms consultants, inc.
msconsultants.com

www.msconsultants.com

SEEDING		
	END WIDTH	SQ. YDS.
736	323	46
	215	31
	198	40

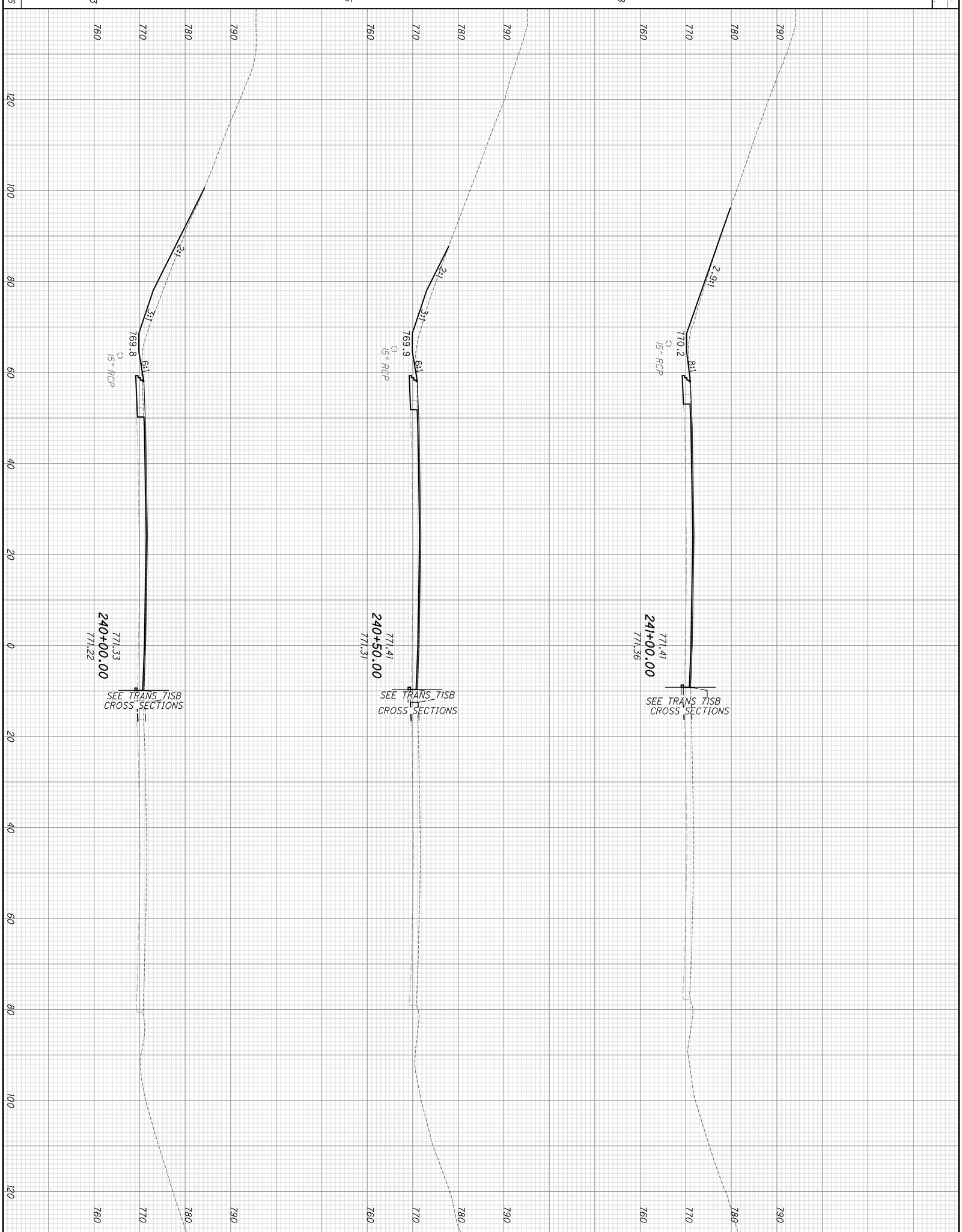

END AREA		
	CUT	FILL
	59	1
	39	1
	20	1

VOLUME		
	CUT	FILL
350	205	2
6	90	2
	55	2

848
2317

FRA-70-14.54

CROSS SECTIONS TRANS I-70 WB (EAST SIDE)
STA. 240+00.00 TO STA. 241+00.00

CALCULATED

CHECKED

PLOT.CEL

ms consultants, inc.
msconsultants.com

www.msconsultants.com

Ohio DOT Workspace
70\71 East Interchange 2E

0 0.5" 1"

Batchplot Spec: \\msconsultants.com\files\production\03\60\06634_2E\standards\plotdir\batchplt.spc
Pen Table: \\msconsultants.com\files\Standards\odot\V8i\ms\plotting\pen\V8i_ms_std.tbl
Plot Driver: \\msconsultants.com\files\Standards\odot\v8i\ms\plotting\PDF.pltcfg
PDF: ohdot V8i
PDF: 60-06634_2E_Columbus

34" x 22"

Model: XS_SHEET_241+50.00_TO_242+50.00
Printed: 6/19/2018 @ 8:55:25 AM
File: N:\03\60\06634_2E\roadway\sheets\105322TXS102.dgn
Ref: FENCE_VIEW1
By: jdouglas

SEEDING END WIDTH	SEEDING SQ. YDS.	END AREA CUT	END AREA FILL	VOLUME CUT	VOLUME FILL
26	132	27	1	46	2
22	128	22	1	38	2
25	179	19	1	36	2
	439			120	6

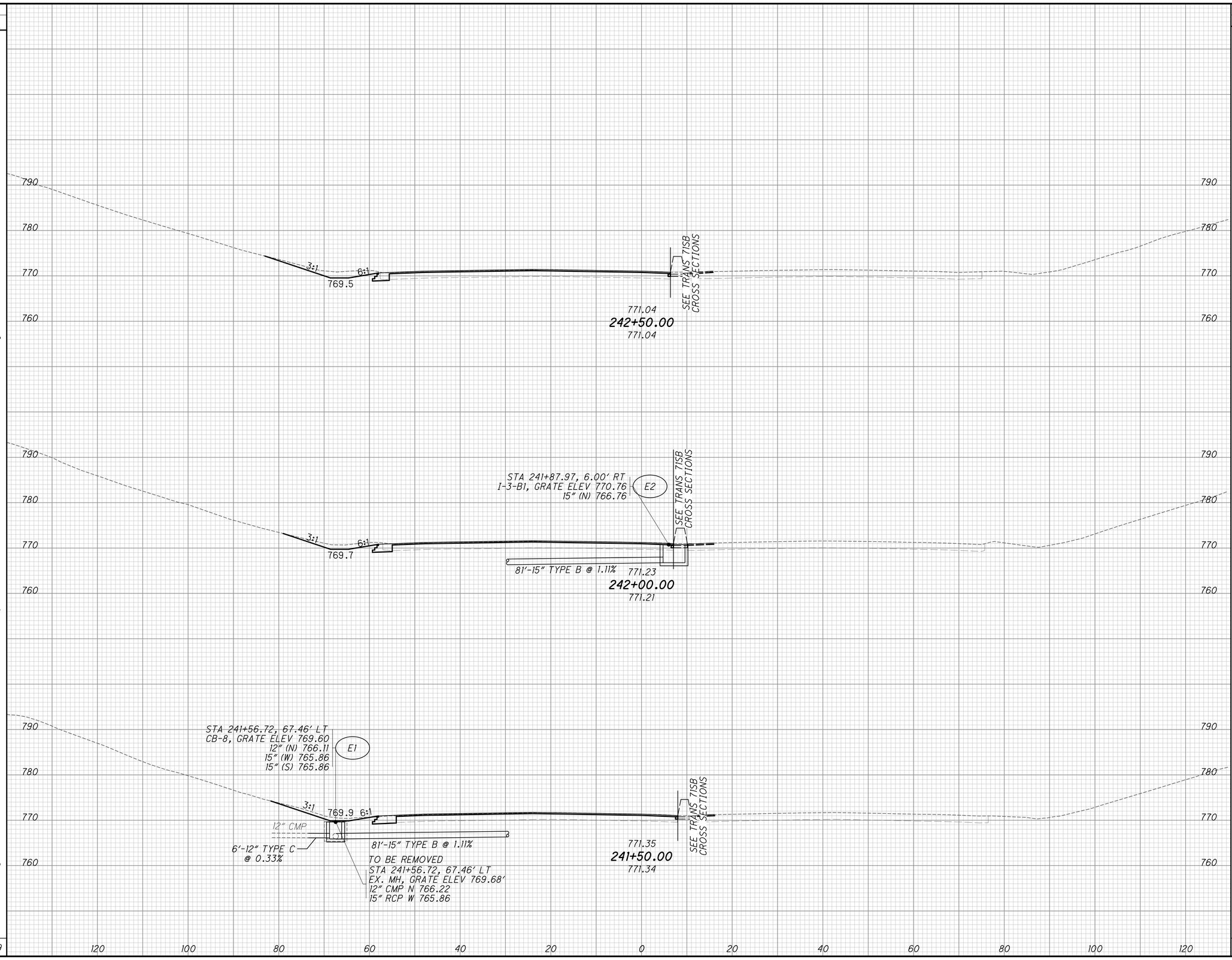

CALCULATED

CHECKED

CROSS SECTIONS TRANS I-70 WB (EAST SIDE)
STA. 241+50.00 TO STA. 242+50.00

FRA-70-14.54

849
2317

ms consultants, inc.

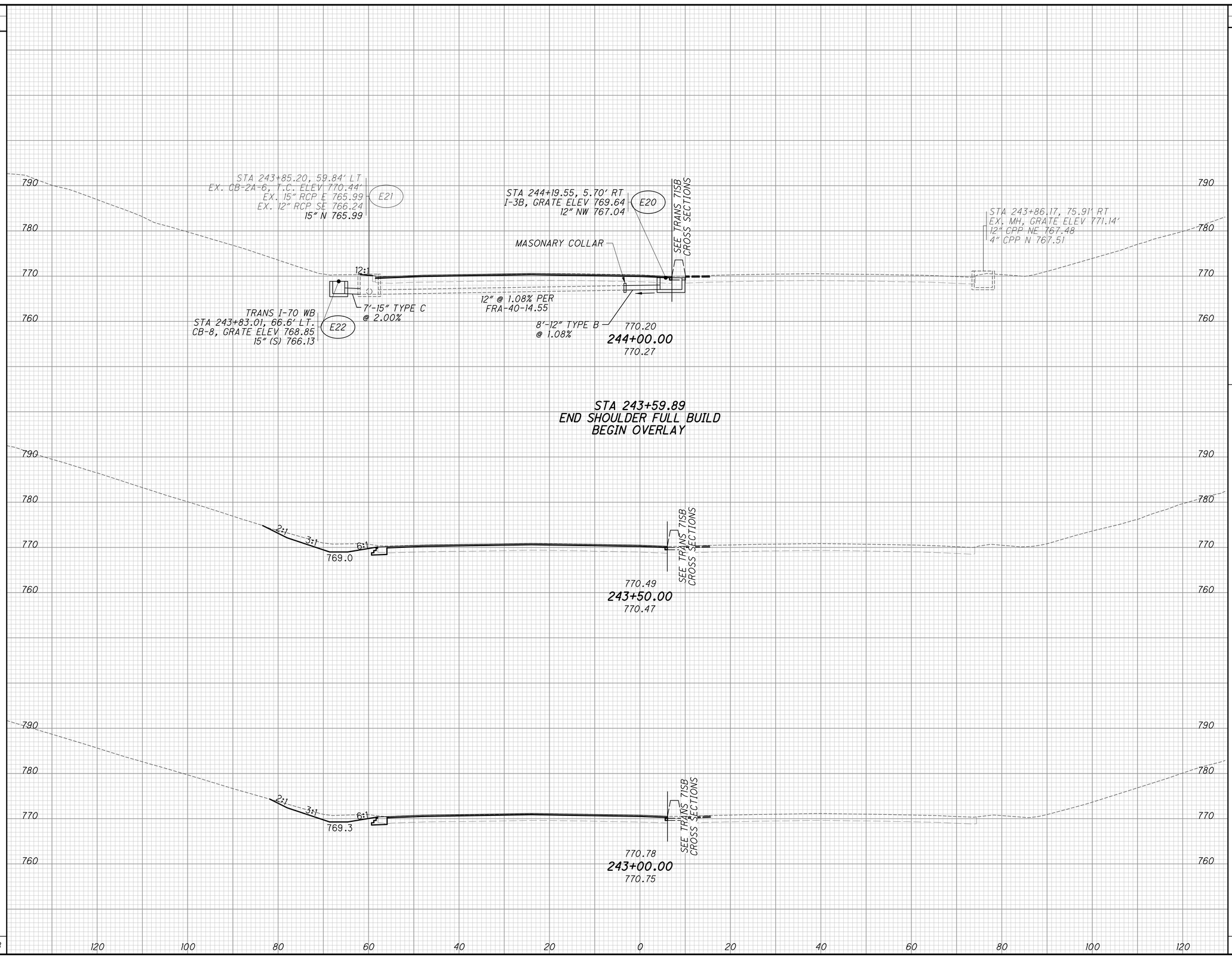

END AREA CUT	END AREA FILL	VOLUME CUT	VOLUME FILL
0	0		
		22	0
30	0	AH	
36	1	BK	
		13	0
36	1		
		62	2
30	1		
		53	2
		150	4

CALCULATED

CHECKED

CROSS SECTIONS TRANS I-70 WB (EAST SIDE)
STA. 243+00.00 TO STA. 244+00.00

FRA-70-14.54

850
2317

ms consultants, inc.

PLOT.CEL

ms consultants, inc.
msconsultants.com

www.msconsultants.com

Ohio DOT Workspace
70\71 East Interchange 2E

Batchplot Spec: \\msconsultants.com\files\production\03\60\06634_2E\standards\plotdrv\batchplt.spc
Pen Table: \\msconsultants.com\files\Standards\ustn\ohdot\V8i\ms\plotting\pen\V8i_ms_std.tbl
Plot Driver: \\msconsultants.com\files\Standards\ustn\ohdot\v8i\ms\plotting\PDF.pltcfg

Model: XS_SHEET_243+00.00_TO_244+00.00 Dgn: FENCE_VIEW1
Printed: 6/19/2018 @ 8:55:26 AM By: jdouglas
File: N:\03\60\06634_2E\roadway\sheets\105322TXS102.dgn

34" x 22"

34" x 22"

Model: XS_SHEET_244+50.00_TO_245+03.39
Printed: 6/19/2018 @ 8:55:27 AM By: jdouglas
File: N:\03\60\06634_2E\roadway\sheets\105322TXS102.dgn

Batchplot Spec: \\msconsultants.com\files\production\03\60\06634_2E\standards\plotdrv\batchplt.spc
Pen Table: \\msconsultants.com\files\Standards\ustn\ohdot\V8i\ms\plotting\pen\V8i_ms_std.tbl
Plot Driver: \\msconsultants.com\files\Standards\ustn\ohdot\v8i\ms\plotting\PDF.pltcfg

0 1" 0.5"

DGN: ohdotV8i
PCF: 60-06634_2E_Columbus

Ohio DOT Workspace
70\71 East Interchange 2E

PLOT.CEL

ms consultants, inc.
msconsultants.com

www.msconsultants.com

SEEDING
END WIDTH | SQ. YDS.

END AREA
CUT | FILL

VOLUME
CUT | FILL

STA 244+85.85, 72.99' LT.
EX. MH, GRATE ELEV 769.79'
30" RCP E 763.91
21" CMP N 765.24
15" RCP S 765.19
15" RCP W 765.03

E23

769.91
244+50.00
769.94

769.62
245+00.00
769.62

769.62
245+03.39
769.60

SEE TRANS 71SB
CROSS SECTIONS

851 / 2317	FRA-70-14.54

CROSS SECTIONS TRANS I-70 WB (EAST SIDE)
STA. 244+50.00 TO STA. 245+03.39

CALCULATED
CHECKED

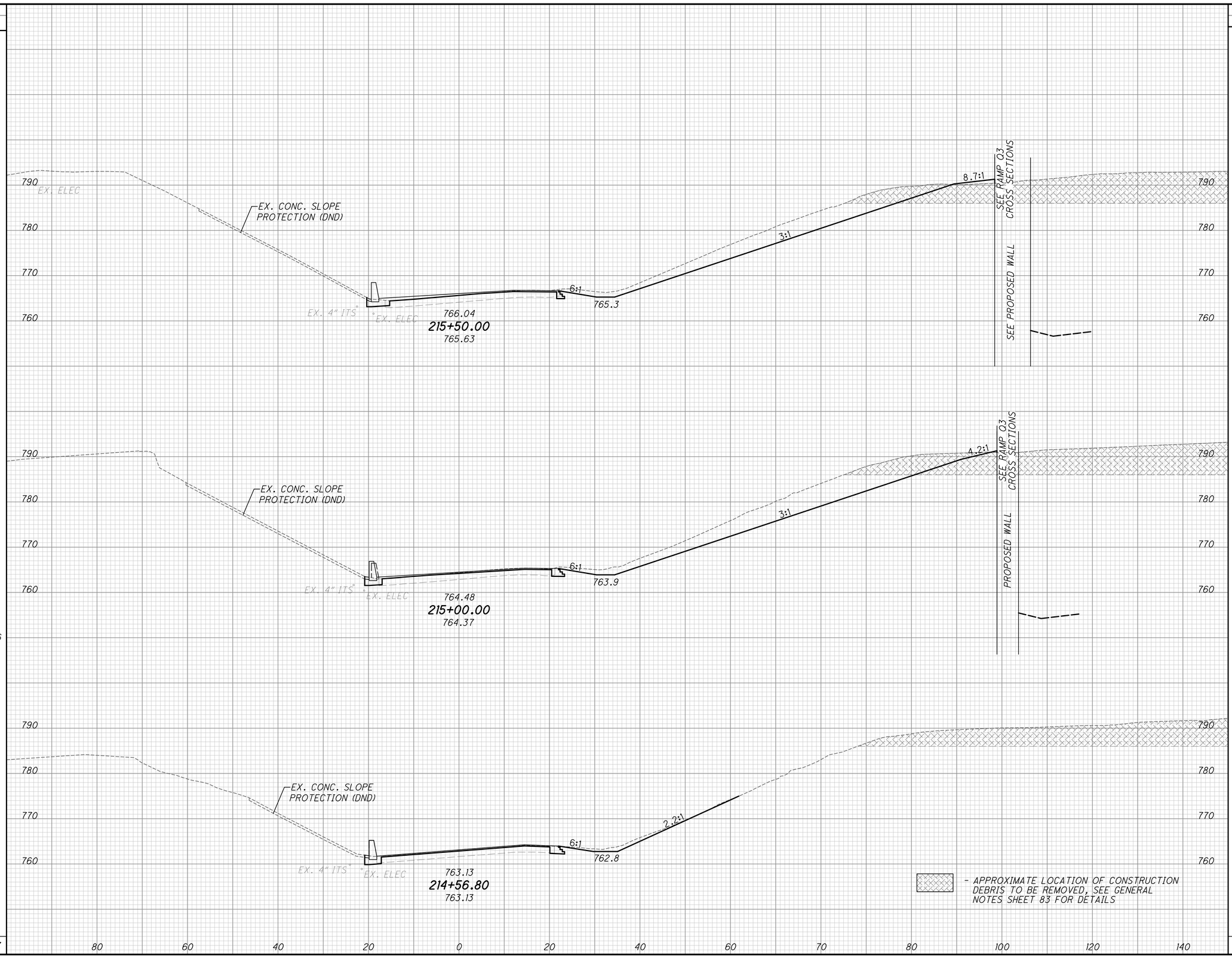

END AREA CUT	END AREA FILL	VOLUME CUT	VOLUME FILL
186	68		
		389	113
234	54		
		207	45
24	2		
		596	158

CALCULATED

CHECKED

CROSS SECTIONS TRANS I-71 SB (EAST SIDE)
STA. 214+56.80 TO STA. 215+50.00

FRA-70-14.54

852
2317

ms consultants, inc.

PLOT.CEL

ms consultants, inc.
msconsultants.com

www.msconsultants.com

Ohio DOT Workspace
70\71 East Interchange 2E

Batchplot Spec: \\msconsultants.com\files\production\03\60\06634_2E\standards\plotdrv\batchplt.spc
Pen Table: \\msconsultants.com\files\Standards\ustn\ohdot\V8i\ms\plotting\pen\V8i_ms_std.tbl
Plot Driver: \\msconsultants.com\files\Standards\ustn\ohdot\v8i\ms\plotting\PDF.pltcfg

34" x 22"

Model: XS_SHEET_214+56.80_TO_215+50.00 Dw: SHEET
Printed: 6/19/2018 @ 8:55:28 AM By: jdouglas
File: N:\03\60\06634_2E\roadway\sheets\105322TXS104.dgn

PLOT.CEL

ms consultants, inc.
msconsultants.com

www.msconsultants.com

Ohio DOT Workspace
70\71 East Interchange 2E

0 0.5" 1"

Batchplot Spec: \\msconsultants.com\files\production\03\60\06634.2E\standards\aldr\batchplt.SBC
Pen Table: \\msconsultants.com\files\Standards\ustn\ohdot\V8i\ms\plotting\pen\V8i_ms_std.tbl
Plot Driver: \\msconsultants.com\files\Standards\ustn\ohdot\v8i\ms\plotting\PDF.pltcfg

34" x 22"

Model: XS_SHEET_216+00.00_TO_217+00.00
Printed: 6/19/2018 @ 8:55:29 AM
File: N:\03\60\06634.2E\roadway\sheets\053221XS104.dgn
View: SHEET
By: jbougias

SEEDING END WIDTH	SEEDING SQ. YDS.	END AREA CUT	END AREA FILL	VOLUME CUT	VOLUME FILL
35	227	63	94	119	174
46	338	65	94	132	199
75	489	78	121	AH	
		25	108	BK	
	1054			446	536

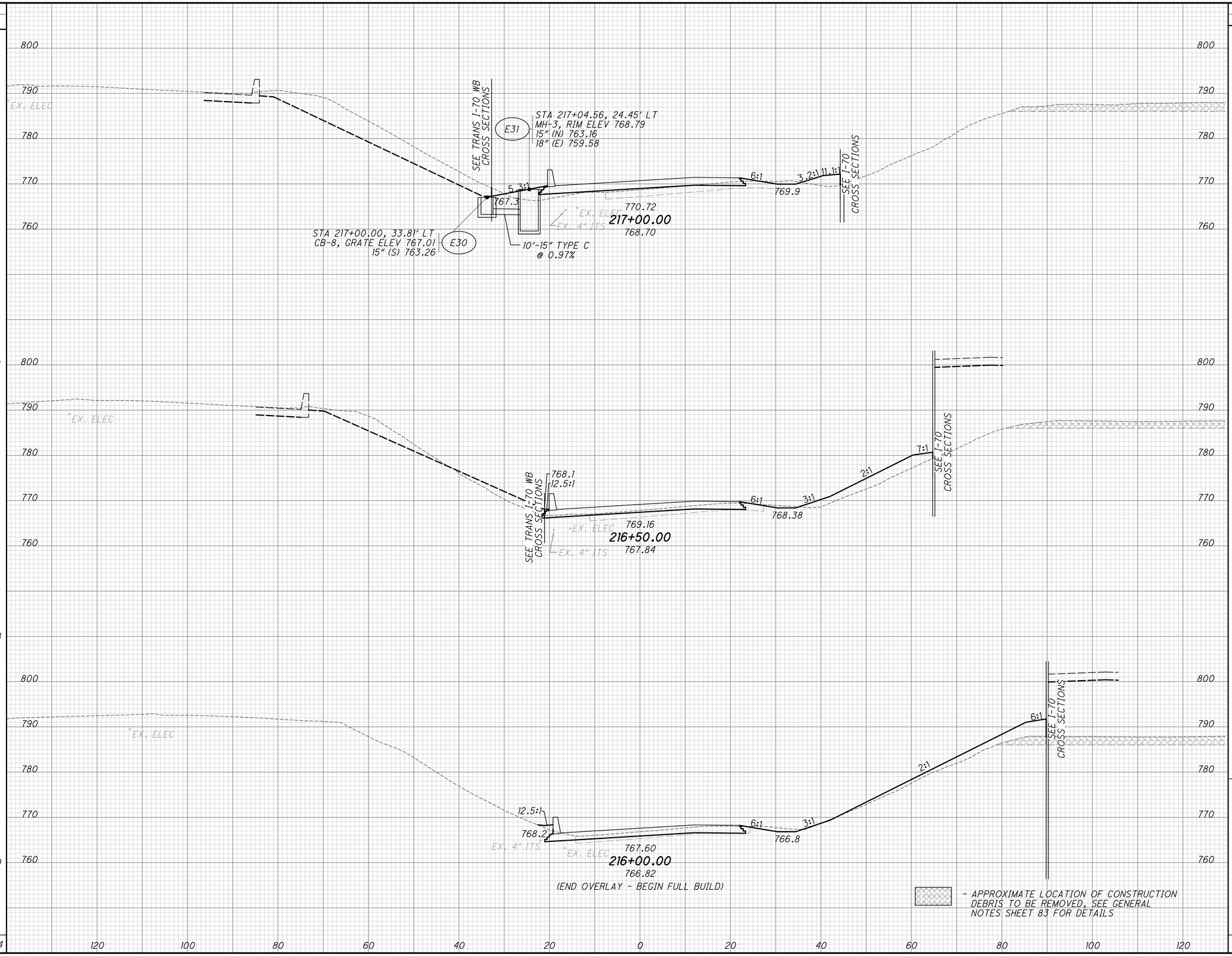

CALCULATED

CHECKED

CROSS SECTIONS TRANS I-71 SB (EAST SIDE)
STA. 216+00.00 TO STA. 217+00.00

FRA-70-14.54

853
2317

PLOT.CEL

ms consultants, inc.
msconsultants.com

www.msconsultants.com

Ohio DOT Workspace
70\71 East Interchange 2E

0 0.5" 1"

Batchplot Spec: \\msconsultants.com\files\production\03\60\06634_2E\standards\plotdrv\batchplt.spc
Pen Table: \\msconsultants.com\files\Standards\usth\ohdot\V8i\ms\plotting\pen\V8i_ms_std.tbl PDF: ohdotV8i
Plot Driver: \\msconsultants.com\files\Standards\usth\ohdot\V8i\ms\plotting\PDF.pltcfg PCF: 60-06634_2E_Columbus

Model: XS_SHEET_217-50.00_TO_218+50.00 View: FENCE_VIEW1
Printed: 6/19/2018 @ 8:55:30 AM By: jdouglas
File: N:\03\60\06634_2E\roadway\sheets\105322TXS104.dgn

34" x 22"

SEEDING END WIDTH	SEEDING SQ. YDS.
52	324
64	372
70	291
	987

END AREA CUT	END AREA FILL	VOLUME CUT	VOLUME FILL
172	317	260	663
109	398	170	693
74	350	127	411
		557	1767

CALCULATED

CHECKED

STA 794+33.10, 50.99' LT
EX. MH, T/C ELEV 770.42'
16035 RECONSTRUCT TO GRADE, APP, TOP SLAB ELEV 764.00
42" RCP S 756.30
36" RCP N 756.57
18" RCP NW 758.40 (TBR)

SEE TRANS I-70 WB CROSS SECTIONS

SEE I-70 CROSS SECTIONS

6:1 771.9 6:1 3:1 2:1 12.3:1 774.6

EX. 4" ITS EX. ELEC

775.40
218+50.00
770.50

36" RCP 42" RCP

SEE TRANS I-70 WB CROSS SECTIONS

SEE I-70 CROSS SECTIONS

6:1 770.4 6:1 3:1 2:1 10.3:1 773.1

EX. ELEC EX. 4" ITS

773.84
218+00.00
770.17

SEE TRANS I-70 WB CROSS SECTIONS

SEE I-70 CROSS SECTIONS

6:1 768.8 6:1 3:1 2:1 4.9:1 771.5

EX. ELEC EX. 4" ITS

772.28
217+50.00
769.47

- APPROXIMATE LOCATION OF CONSTRUCTION DEBRIS TO BE REMOVED, SEE GENERAL NOTES SHEET 83 FOR DETAILS

800 790 780 770 760

120 100 80 60 40 20 0 20 40 60 80 100 120

CROSS SECTIONS TRANS I-71 SB (EAST SIDE)
STA. 217+50.00 TO STA. 218+50.00

FRA-70-14.54

854
2317

34" x 22"

Model: XS_SHEET_219+00.00_TO_220+00.00 View: FENCE_VIEW1
Printed: 6/19/2018 @ 8:55:31 AM By: jdouglas
File: N:\03\60\06634_2E\roadway\sheets\105322TXS104.dgn

Batchplot Spec: \\msconsultants.com\files\production\03\60\06634_2E\standards\plotdrv\batchplt.spf
Pen Table: \\msconsultants.com\files\Standards\ustn\ohdot\V8i\ms\plotting\pen\V8i_ms_std.tbl
Plot Driver: \\msconsultants.com\files\Standards\ustn\ohdot\v8i\ms\plotting\PDF.pltcfg

PCF: ohdotV8i
PCF: 60-06634_2E_Columbus

Ohio DOT Workspace
70\71 East Interchange 2E

PLOT.CEL

ms consultants, inc.
msconsultants.com

www.msconsultants.com

SEEDING	END WIDTH	SQ. YDS.
	43	266
	35	219
	31	185

SEE TRANS I-70 WB CROSS SECTIONS

773.5 6:1 776.92 219+00.00 772.26 6:1 776.1 3:1 11.9:1

SEE I-70 CROSS SECTIONS

775.1 6:1 778.25 219+50.00 776.40 6:1 777.2 3:1 12:1

SEE I-70 CROSS SECTIONS

776.6 6:1 779.35 220+00.00 780.04 6:1 777.9 12.5:1 3:1

SEE I-70 CROSS SECTIONS

EX. ELEC

EX. 4" ITS

- APPROXIMATE LOCATION OF CONSTRUCTION DEBRIS TO BE REMOVED; SEE GENERAL NOTES SHEET 83 FOR DETAILS

END AREA	CUT	FILL
	197	262
	190	207
	156	154

VOLUME	CUT	FILL
	342	536
	358	434
	320	334
	1020	1304

855
2317

FRA-70-14.54

CROSS SECTIONS TRANS I-71 SB (EAST SIDE)
STA. 219+00.00 TO STA. 220+00.00

CALCULATED

CHECKED

ms consultants, inc.

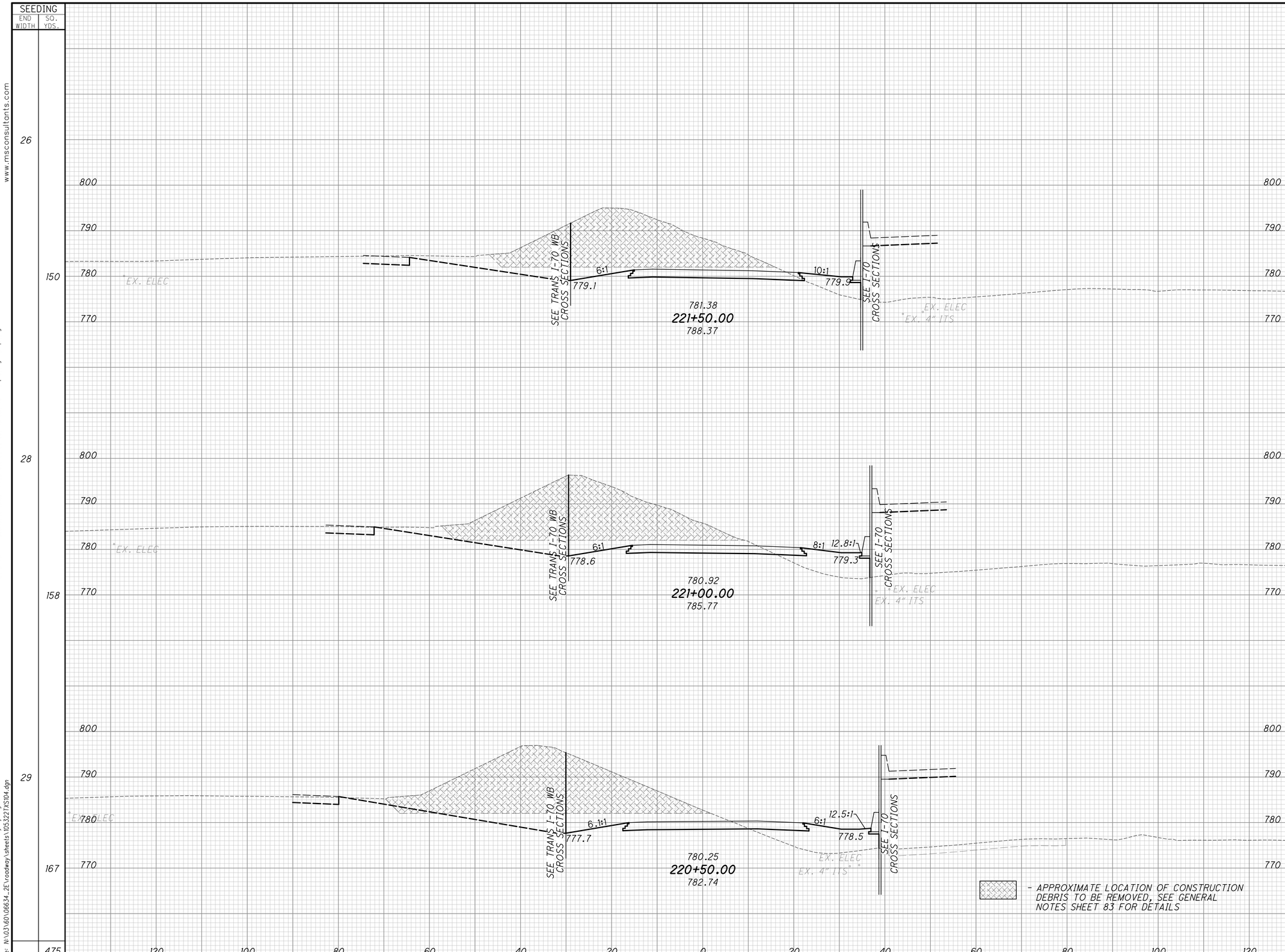

END AREA CUT	END AREA FILL	VOLUME CUT	VOLUME FILL
109	42		
		206	116
113	83		
		220	179
125	111		
		261	245
		687	540

CALCULATED

CHECKED

CROSS SECTIONS TRANS I-71 SB (EAST SIDE)
STA. 220+50.00 TO STA. 221+50.00

FRA-70-14.54

856
2317

ms consultants, inc.

PLOT.CEL

ms consultants, inc.
msconsultants.com

www.msconsultants.com

Ohio DOT Workspace
70\71 East Interchange 2E

Batchplot Spec: \\msconsultants.com\files\production\03\60\06634_2E\standards\plotdrv\batchplt.spc
Pen Table: \\msconsultants.com\files\Standards\ustn\ohdot\V8i\ms\plotting\pen\V8i_ms_std.tbl
Plot Driver: \\msconsultants.com\files\Standards\ustn\ohdot\v8i\ms\plotting\PDF.pltcfg

34" x 22"

Model: XS_SHEET_220+50.00_TO_221+50.00 Dw: FENCE_VIEW1
Printed: 6/19/2018 @ 8:55:32 AM By: jdouglas
File: N:\03\60\06634_2E\roadway\sheets\105322TXS104.dgn

PLOT.CEL

ms consultants, inc.
msconsultants.com

www.msconsultants.com

Ohio DOT Workspace
70\71 East Interchange 2E

1" 0.5" 0

Batchplot Spec: \\msconsultants.com\files\production\03\60\06634_2E\standards\plotdrv\batchplt.spc
Pen Table: \\msconsultants.com\files\Standards\usth\ohdot\V8i\ms\plotting\pen\V8i_ms_std.tbl PCF: ohdot\V8i
Plot Driver: \\msconsultants.com\files\Standards\usth\ohdot\v8i\ms\plotting\PDF.pltcfg PCF: 60-06634_2E_Columbus

Model: XS_SHEET_222+00.00_TO_223+00.00 - FENCE_VIEW1
Printed: 6/19/2018 @ 8:55:33 AM By: jdougas
File: N:\03\60\06634_2E\roadway\sheets\105321XS104.dgn

34" x 22"

SEEDING END WIDTH	SEEDING SQ. YDS.
19	
	114
22	
	128
24	
	140
	382

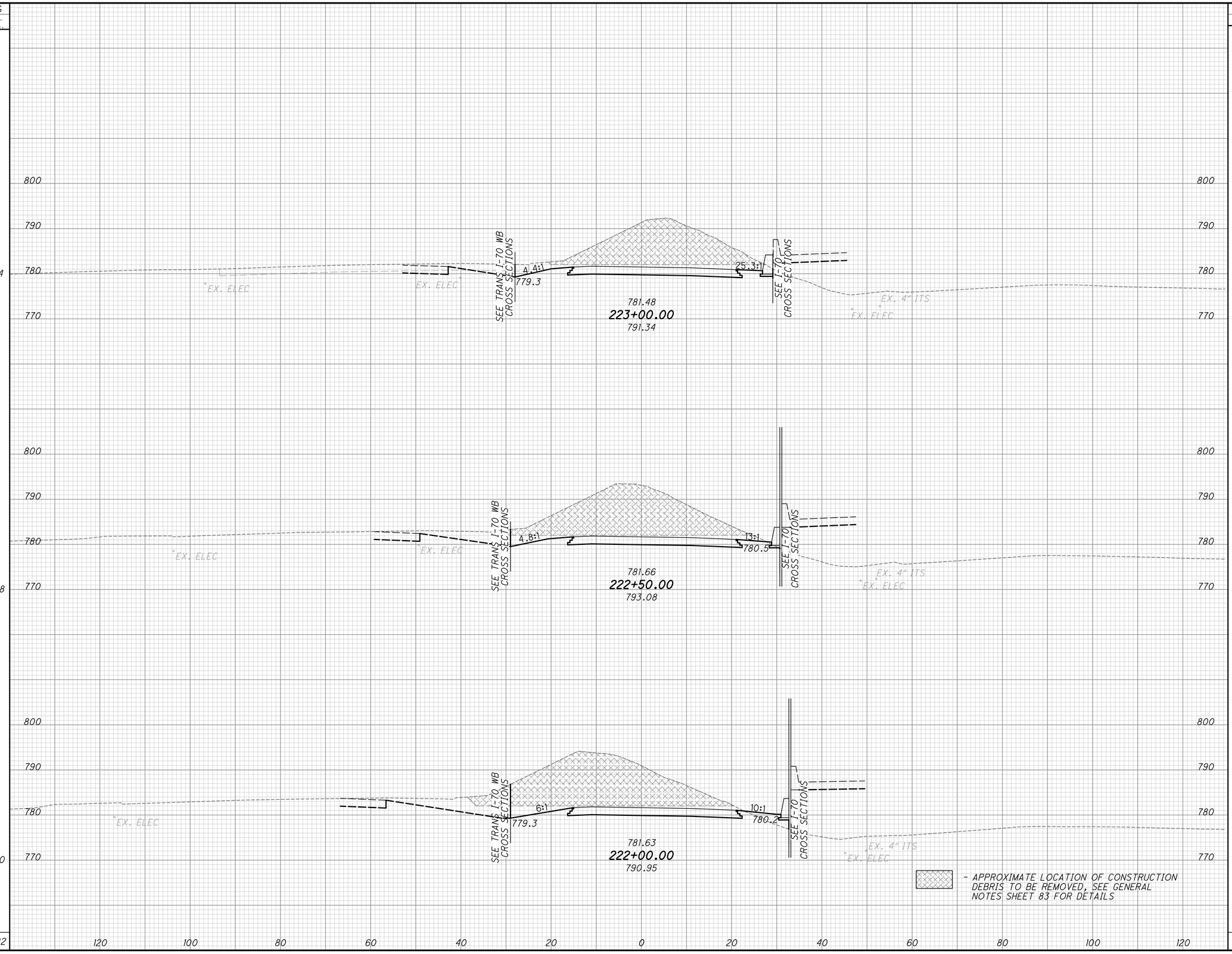

END AREA CUT	END AREA FILL	VOLUME CUT	VOLUME FILL
122	3		
106	3		
105	16		
		211	5
		195	17
		199	53
		605	75

CALCULATED

CHECKED

CROSS SECTIONS TRANS I-71 SB (EAST SIDE)
STA. 222+00.00 TO STA. 223+00.00

FRA-70-14.54

857
2317

ms consultants, inc.

PLOT.CEL

ms consultants, inc.
msconsultants.com

Ohio DOT Workspace
70\71 East Interchange 2E

www.msconsultants.com

1"
0.5"
0

Batchplot Spec: \\msconsultants.com\files\production\03\60\06634_2E\standards\plotdir\batchplt.spc
Pen Table: \\msconsultants.com\files\Standards\usth\ohdot\V8i\ms\plotting\pen\V8i_ms_std.tbl
Plot Driver: \\msconsultants.com\files\Standards\usth\ohdot\v8i\ms\plotting\PDF.pltcfg

Model: XS_SHEET_223+50.00_TO_224+50.00 - FENCE_VIEW1
Printed: 6/19/2018 @ 8:55:34 AM By: jdougos
File: N:\03\60\06634_2E\roadway\sheets\1053221XS104.dgn

34" x 22"

SEEDING END WIDTH	SEEDING SQ. YDS.	END AREA CUT	END AREA FILL	VOLUME CUT	VOLUME FILL
8	38	145	1	263	1
6	53	139	0	254	6
14	91	135	6	238	8
	182			755	15

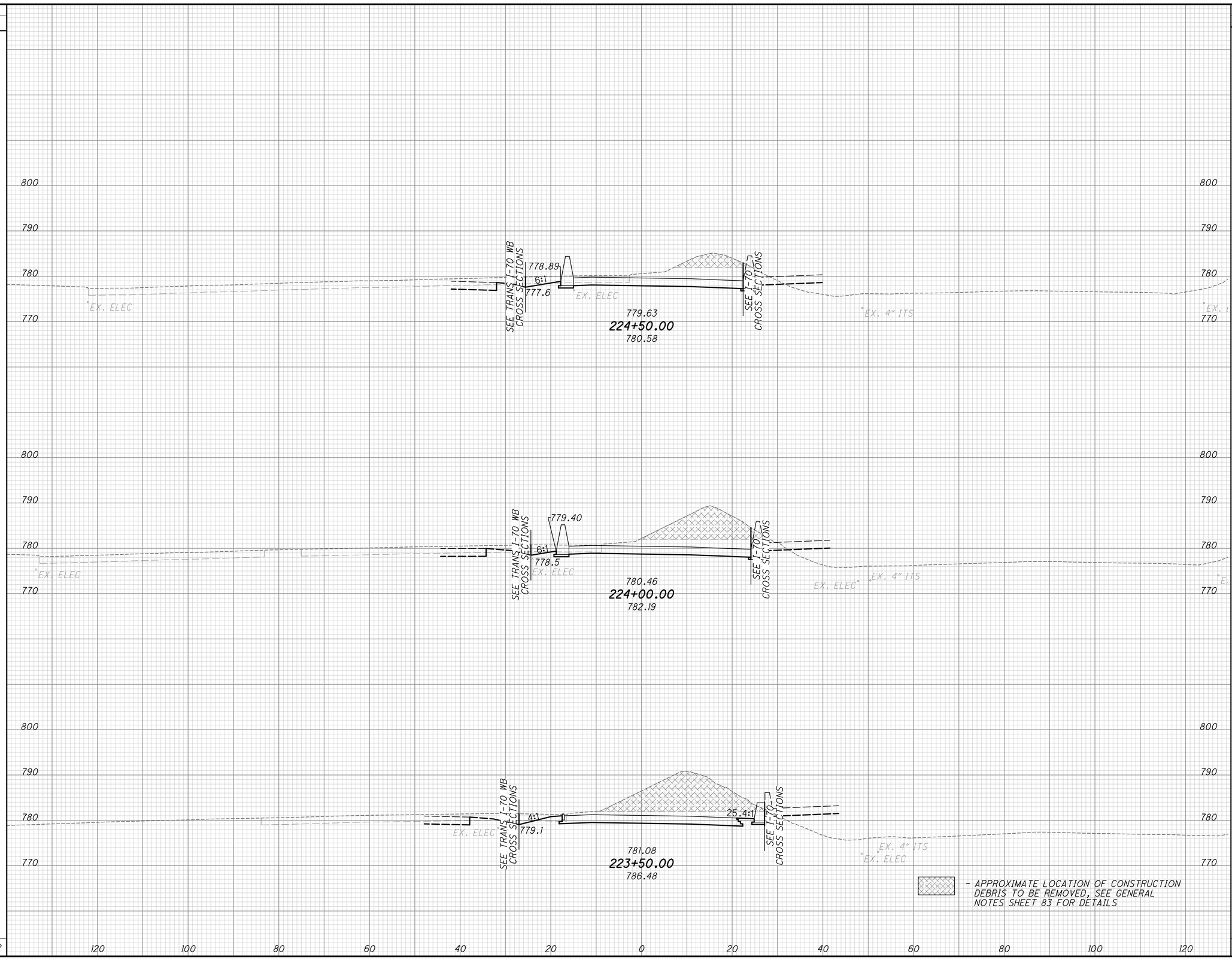

- APPROXIMATE LOCATION OF CONSTRUCTION DEBRIS TO BE REMOVED, SEE GENERAL NOTES SHEET 83 FOR DETAILS

CALCULATED

CHECKED

CROSS SECTIONS TRANS I-71 SB (EAST SIDE)
STA. 223+50.00 TO STA. 224+50.00

FRA-70-14.54

858
2317

ms consultants, inc.

PLOT.CEL

ms consultants, inc.
msconsultants.com

www.msconsultants.com

Ohio DOT Workspace
70\71 East Interchange 2E

1"
0.5"
0

Batchplot Spec: \\msconsultants.com\files\production\03\60\06634_2E\standards\plotdir\batchplt.spc
Pen Table: \\msconsultants.com\files\Standards\usth\ohdot\V8i\ms\plotting\pen\V8i_ms_std.tbl PCF: ohdotV8i
Plot Driver: \\msconsultants.com\files\Standards\usth\ohdot\V8i\ms\plotting\PDF.pltcfg PCF: 60-06634_2E_Columbus

34" x 22"

Model: XS_SHEET_225-00.00_TO_226-00.00 Name: FENCE_VIEW1
Printed: 6/19/2018 @ 8:55:35 AM By: jdouglas
File: N:\03\60\06634_2E\roadway\sheets\105221XS104.dgn

SEEDING END WIDTH	SEEDING SQ. YDS.	END AREA CUT	END AREA FILL	VOLUME CUT	VOLUME FILL
3	24	133	0	242	1
6	36	128	0	242	1
7	42	133	0	258	1
	102			742	3

CALCULATED

CHECKED

790
780
770

EX. ELEC

SEE TRANS I-70 WB CROSS SECTIONS

774.55
6:1
774.1
775.89
226+00.00
777.67

SEE I-70 CROSS SECTIONS

EX. ELEC

EX. 4" ITS

EX. ELEC

776.23
6:1
775.3
777.32
225+50.00
778.71

STA 800+78.12, 2.80' LT
I-3-B, GRATE ELEV 777.35
15" (S) 770.06
81

777.66
6:1
776.5
778.58
225+00.00
779.56

STA 800+77.28, 31.00' RT
MH-3, RIM ELEV 774.80
E11
15" (N) 769.56
15" (S) 769.56
15" (W) 769.56

33'-15" TYPE B
@ 1.53%

800
790
780
770

120 100 80 60 40 20 0 20 40 60 80 100 120

CROSS SECTIONS TRANS I-71 SB (EAST SIDE)
STA. 225+00.00 TO STA. 226+00.00

FRA-70-14.54

859
2317

ms consultants, inc.

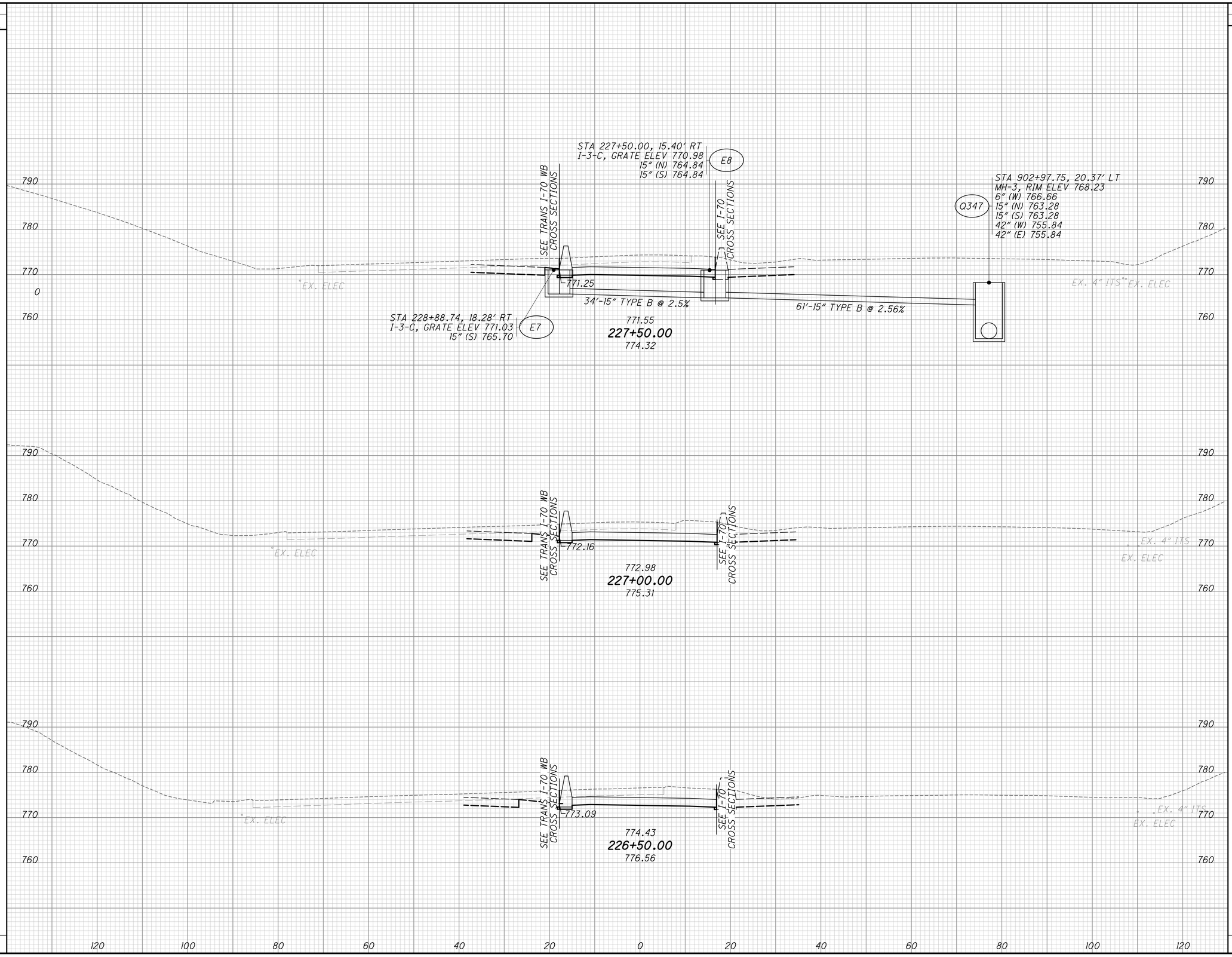

END AREA CUT	END AREA FILL	VOLUME CUT	VOLUME FILL
150	0		
		271	0
143	0		
		256	0
134	0		
		247	0
		774	0

CALCULATED

CHECKED

CROSS SECTIONS TRANS I-71 SB (EAST SIDE)
STA. 226+50.00 TO STA. 227+50.00

FRA-70-14.54

860
2317

ms consultants, inc.

PLOT.CEL

ms consultants, inc.
msconsultants.com

Ohio DOT Workspace
70\71 East Interchange 2E
www.msconsultants.com

Batchplot Spec: \\msconsultants.com\files\production\03\60\06634_2E\standards\plotdrv\batchplt.spc
Pen Table: \\msconsultants.com\files\Standards\ustn\ohdot\V8i\ms\plotting\pen\V8i_ms_std.tbl
Plot Driver: \\msconsultants.com\files\Standards\ustn\ohdot\v8i\ms\plotting\PDF.pltcfg

34" x 22"

Model: XS_SHEET_226+50.00_TO_227+50.00 Dgn: FENCE_VIEW1
Printed: 6/19/2018 @ 8:55:36 AM By: jdouglas
File: N:\03\60\06634_2E\roadway\sheets\1053227XS104.dgn

34" x 22"

Model: XS_SHEET_228+00.00_TO_229+00.00
Printed: 6/19/2018 @ 8:55:37 AM By: jdouglas
File: N:\03\60\06634_2E\roadway\sheets\105322TXS104.dgn

Batchplot Spec: \\msconsultants.com\files\production\03\60\06634_2E\standards\plotdrv\batchplt.spc
Pen Table: \\msconsultants.com\files\Standards\ustn\ohdot\V8i\ms\plotting\pen\V8i_ms_std.tbl
Plot Driver: \\msconsultants.com\files\Standards\ustn\ohdot\v8i\ms\plotting\PDF.pltcfg

Level: FENCE_VIEW1
PCF: ohdotV8i
PCF: 60-06634_2E_Columbus

Ohio DOT Workspace
70\71 East Interchange 2E

PLOT.CEL

ms consultants, inc.
msconsultants.com

www.msconsultants.com

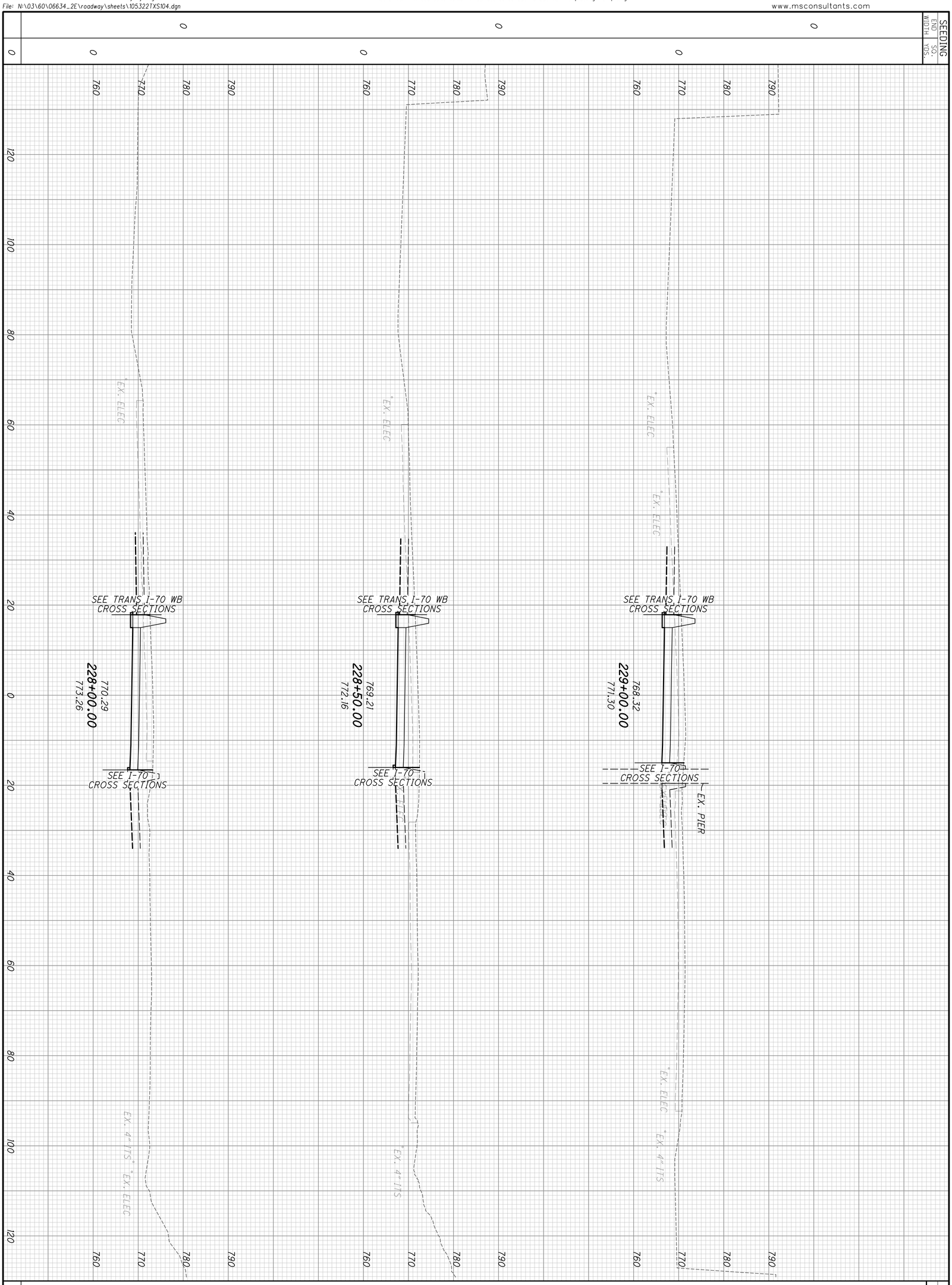

ms consultants, inc.

861
2317

FRA-70-14.54

CROSS SECTIONS TRANS I-71 SB (EAST SIDE)
STA. 228+00.00 TO STA. 229+00.00

CALCULATED

CHECKED

PLOT.CEL

ms consultants, inc.
msconsultants.com

www.msconsultants.com

Ohio DOT Workspace
70\71 East Interchange 2E

1" 0 0.5"

Batchplot Spec: \\msconsultants.com\files\production\03\60\06634_2E\standards\plotdrv\batchplt.spc
Pen Table: \\msconsultants.com\files\Standards\usth\ohdot\V8i\ms\plotting\pen\V8i_ms_std.tbl
Plot Driver: \\msconsultants.com\files\Standards\usth\ohdot\v8i\ms\plotting\PDF.pltcfg
PDF: ohdotV8i
PDF: 60-06634_2E_Columbus

34" x 22"

Model: XS_SHEET_229+50.00_TO_230+50.00 Ref: FENCE_VIEW1
Printed: 6/19/2018 @ 8:55:37 AM By: jdouglas
File: N:\03\60\06634_2E\roadway\sheets\105322IXS104.dgn

SEEDING END WIDTH	SEEDING SQ. YDS.
0	
	0
0	
	0
0	
	0
0	
	0
0	

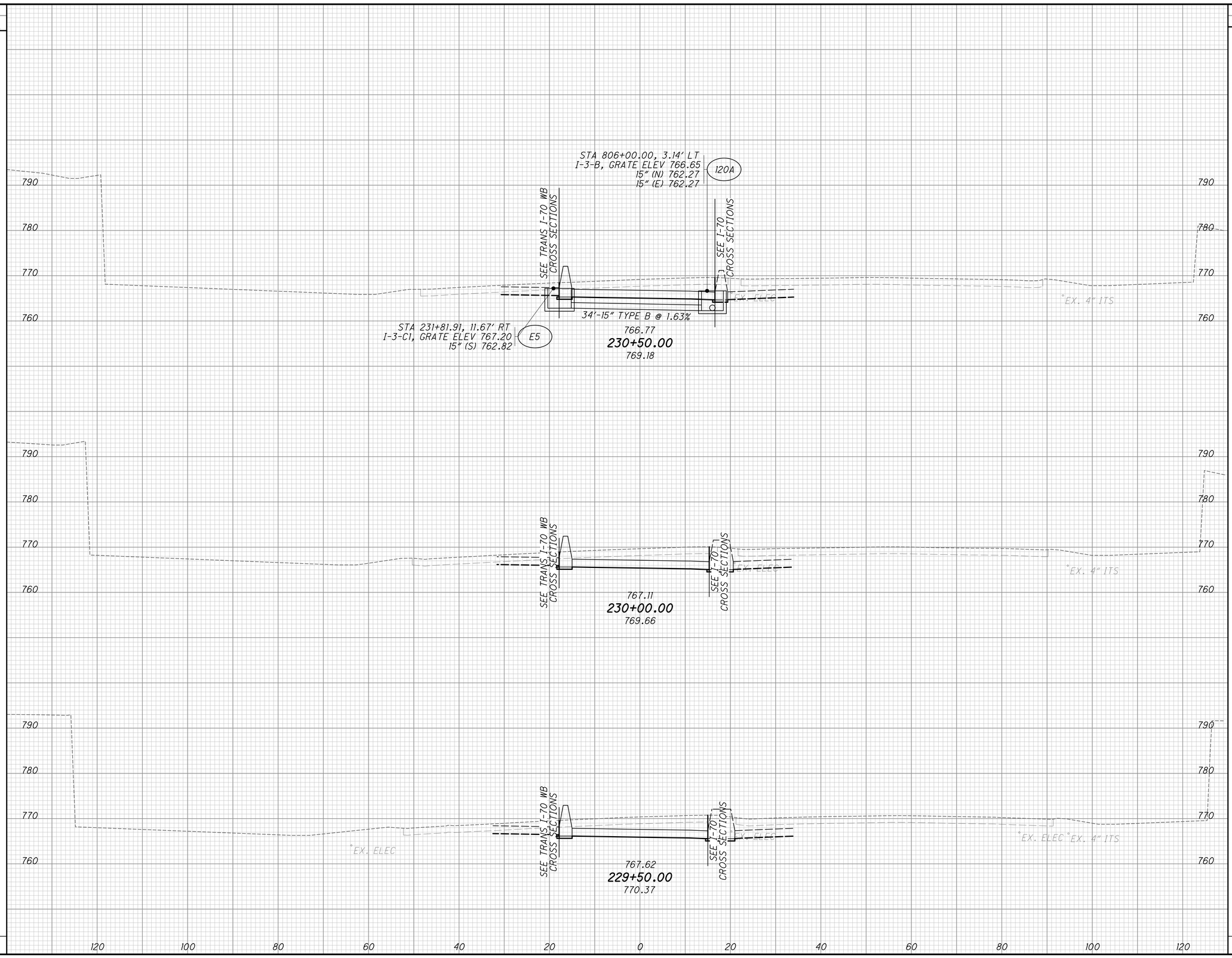

END AREA CUT	END AREA FILL	VOLUME CUT	VOLUME FILL
142	0		
		262	0
141	0		
		265	0
145	0		
		274	0
		801	0

CALCULATED

CHECKED

CROSS SECTIONS TRANS I-71 SB (EAST SIDE)
STA. 229+50.00 TO STA. 230+50.00

FRA-70-14.54

862
2317

PLOT.CEL

ms consultants, inc.
msconsultants.com

www.msconsultants.com

Ohio DOT Workspace
70\71 East Interchange 2E

1"
0.5"
0

Batchplot Spec: \\msconsultants.com\files\production\03\60\06634_2E\standards\plotdr\batchplt.spc
Pen Table: \\msconsultants.com\files\Standards\usth\ohdot\V8i\ms\plotting\pen\V8i_ms_std.tbl PCF: ohdotV8i
Plot Driver: \\msconsultants.com\files\Standards\usth\ohdot\v8i\ms\plotting\PDF.pltcfg PCF: 60-06634_2E_Columbus

34" x 22"

Model: XS_SHEET_231+00.00_TO_232+00.00 Cfg: FENCE_VIEW1
Printed: 6/19/2018 @ 8:55:38 AM By: jdouglas
File: N:\03\60\06634_2E\roadway\sheets\105221XS104.dgn

SEEDING	
END WIDTH	SQ. YDS.
0	
	0
0	
	0
0	
	0
0	
	0

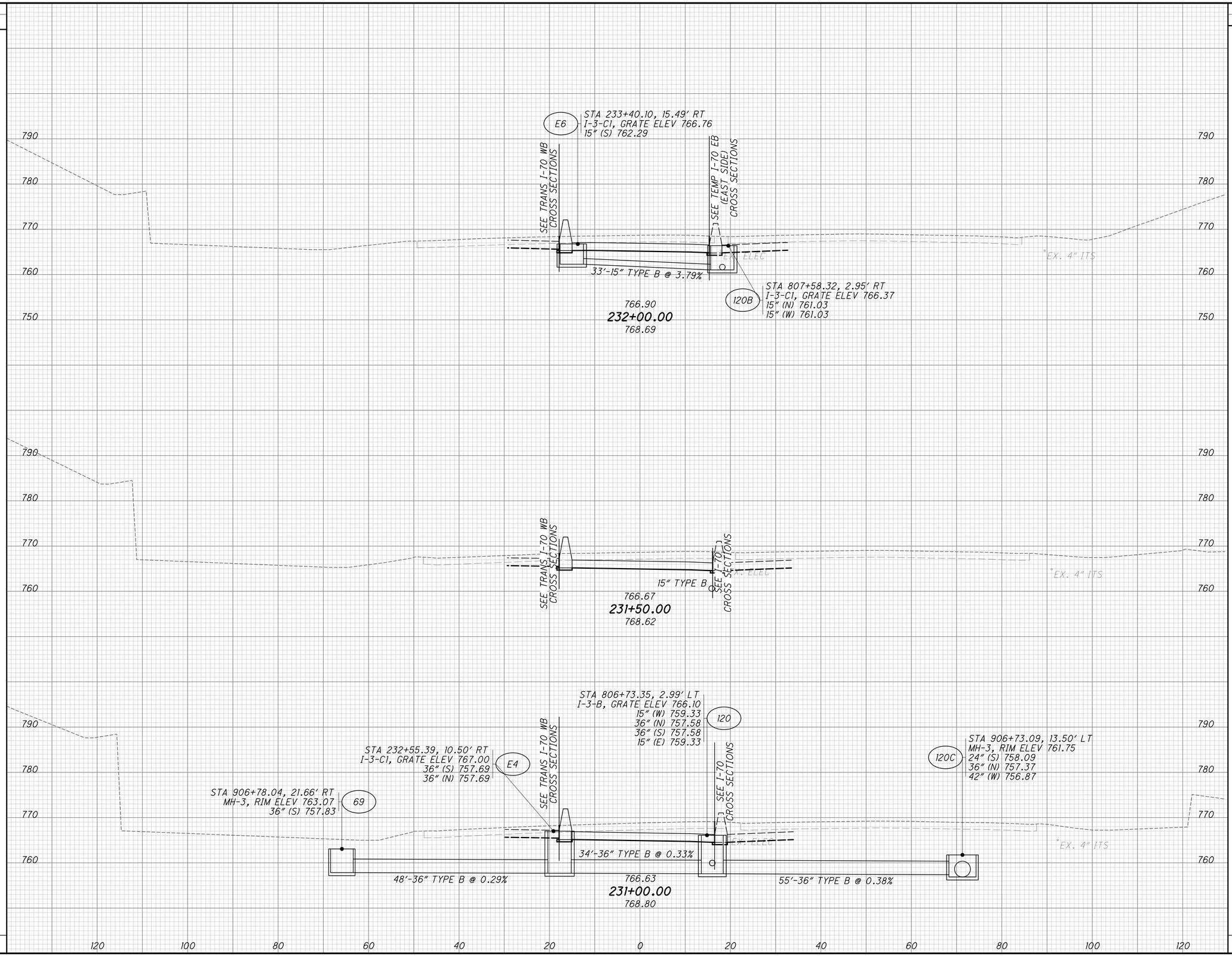

END AREA		VOLUME	
CUT	FILL	CUT	FILL
116	0		
		224	0
126	0		
		240	0
134	0		
		225	0
		689	0

CALCULATED

CHECKED

CROSS SECTIONS TRANS I-71 SB (EAST SIDE)
STA. 231+00.00 TO STA. 232+00.00

FRA-70-14.54

863
2317

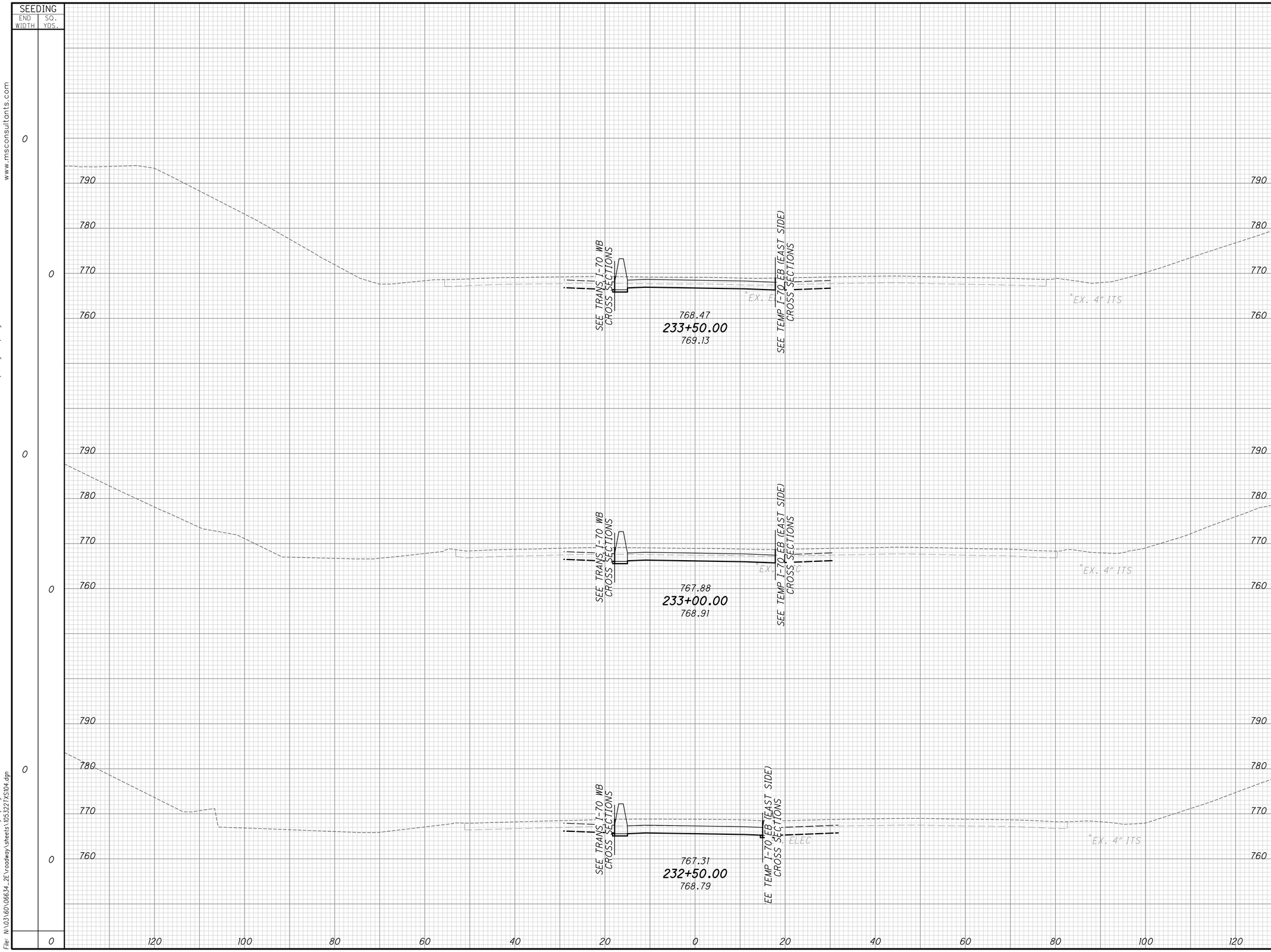

END AREA CUT	END AREA FILL	VOLUME CUT	VOLUME FILL
88	0		
		176	0
102	0		
		193	0
107	0		
		206	0
		583	0

CALCULATED

CHECKED

CROSS SECTIONS TRANS I-71 SB (EAST SIDE)
STA. 232+50.00 TO STA. 233+50.00

FRA-70-14.54

864
2317

ms consultants, inc.

PLOT.CEL

ms consultants, inc.
msconsultants.com

Ohio DOT Workspace
70\71 East Interchange 2E
www.msconsultants.com

Batchplot Spec: \\msconsultants.com\files\production\03\60\06634_2E\standards\plotdrv\batchplt.spc
Pen Table: \\msconsultants.com\files\Standards\ustn\ohdot\V8i\ms\plotting\pen\V8i_ms_std.tbl
Plot Driver: \\msconsultants.com\files\Standards\ustn\ohdot\v8i\ms\plotting\PDF.pltcfg

34" x 22"

Model: XS_SHEET_232+50.00_TO_233+50.00 Div: FENCE_VIEW1
Printed: 6/19/2018 @ 8:55:39 AM By: jdouglas
File: N:\03\60\06634_2E\roadway\sheets\1053227XS104.dgn

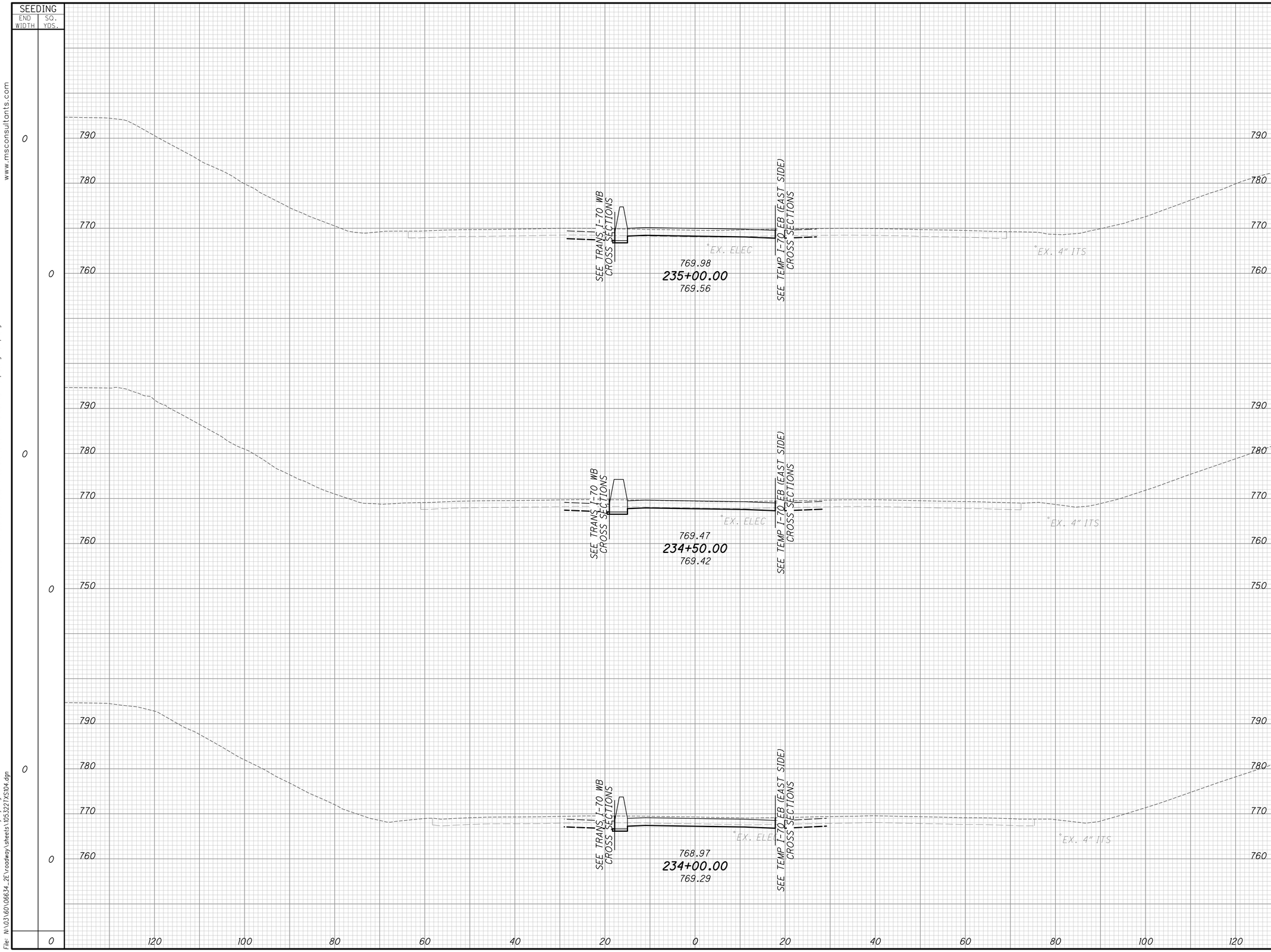

END AREA CUT	END AREA FILL	VOLUME CUT	VOLUME FILL
60	4		
		121	3
70	0		
		137	0
78	0		
		153	0
		411	3

CALCULATED

CHECKED

CROSS SECTIONS TRANS I-71 SB (EAST SIDE)
STA. 234+00.00 TO STA. 235+00.00

FRA-70-14.54

865
2317

ms consultants, inc.

PLOT.CEL

ms consultants, inc.
msconsultants.com

Ohio DOT Workspace
70\71 East Interchange 2E
www.msconsultants.com

Batchplot Spec: \\msconsultants.com\files\production\03\60\06634_2E\standards\plotdrv\batchplt.spc
Pen Table: \\msconsultants.com\files\Standards\ustn\ohdot\V8i\ms\plotting\pen\V8i_ms_std.tbl
Plot Driver: \\msconsultants.com\files\Standards\ustn\ohdot\v8i\ms\plotting\PDF.pltcfg

34" x 22"

Model: XS_SHEET_234+00.00_TO_235+00.00 Div: FENCE_VIEW1
Printed: 6/19/2018 @ 8:55:40 AM By: jdouglas
File: N:\03\60\06634_2E\roadway\sheets\105322TXS104.dgn

34" x 22"

Model: XS_SHEET_235+50.00_TO_236+50.00 User: FENCE_VIEW1
Printed: 6/19/2018 @ 8:55:41 AM By: jdouglas
File: N:\03\60\06634_2E\roadway\sheets\105322TXS104.dgn

Batchplot Spec: \\msconsultants.com\files\production\03\60\06634_2E\standards\plotdrv\batchplt.spc
Pen Table: \\msconsultants.com\files\Standards\ustn\ohdot\V8i\ms\plotting\pen\V8i_ms_std.tbl
Plot Driver: \\msconsultants.com\files\Standards\ustn\ohdot\v8i\ms\plotting\PDF.pltcfg

PCF: ohdotV8i
PCF: 60-06634_2E_Columbus

Ohio DOT Workspace
70\71 East Interchange 2E

ms consultants, inc.
msconsultants.com

PLOT.CEL

www.msconsultants.com

SEEDING

	END WIDTH	SQ. YDS.
	0	0
	0	0
	0	0

SEE TRANS I-70 WB CROSS SECTIONS

770.44
235+50.00
769.69

SEE TEMP I-70 EB (EAST SIDE) CROSS SECTIONS

*EX. ELEC

*EX. 4" ITS

SEE TRANS I-70 WB CROSS SECTIONS

770.85
236+00.00
769.99

SEE TEMP I-70 EB (EAST SIDE) CROSS SECTIONS

*EX. 4" ITS

SEE TRANS I-70 WB CROSS SECTIONS

771.18
236+50.00
770.26

SEE TEMP I-70 EB (EAST SIDE) CROSS SECTIONS

*EX. 4" ITS

END AREA	CUT	FILL
	57	11
	55	15
	53	18

VOLUME	CUT	FILL
	312	68
	108	13
	104	24
	100	31

ms consultants, inc.

866
2317

FRA-70-14.54

CROSS SECTIONS TRANS I-71 SB (EAST SIDE)
STA. 235+50.00 TO STA. 236+50.00

CALCULATED

CHECKED

PLOT.CEL

ms consultants, inc.
msconsultants.com

Ohio DOT Workspace
70\71 East Interchange 2E
www.msconsultants.com

Batchplot Spec: \\msconsultants.com\files\production\03\60\06634_2E\standards\plotdrv\batchplt.spc
Pen Table: \\msconsultants.com\files\Standards\ustn\ohdot\V8i\ms\plotting\pen\V8i_ms_std.tbl
Plot Driver: \\msconsultants.com\files\Standards\ustn\ohdot\v8i\ms\plotting\PDF.pltcfg

34" x 22"

Model: XS_SHEET_237+00.00_TO_238+00.00 Div: FENCE_VIEW1
Printed: 6/19/2018 @ 8:55:42 AM By: jdouglas
File: N:\03\60\06634_2E\roadway\sheets\105322TXS104.dgn

SEEDING END WIDTH	SEEDING SQ. YDS.	END AREA CUT	END AREA FILL	VOLUME CUT	VOLUME FILL
0		45	6		
	0			84	17
0		46	12		
	0			90	27
0		52	17		
	0			97	33
	0			271	77

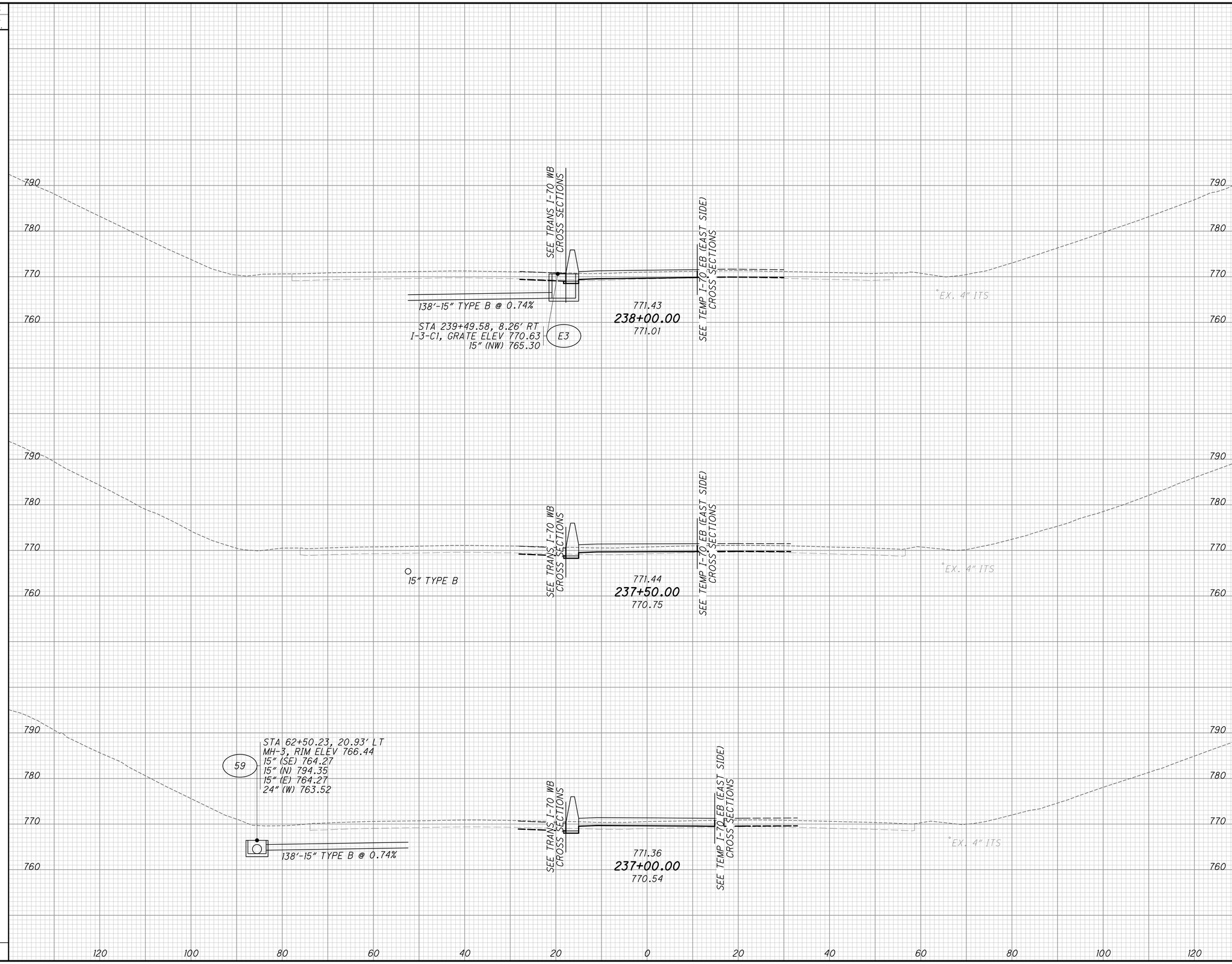

CALCULATED

CHECKED

CROSS SECTIONS TRANS I-71 SB (EAST SIDE)
STA. 237+00.00 TO STA. 238+00.00

FRA-70-14.54

867
2317

ms consultants, inc.

PLOT.CEL

ms consultants, inc.
msconsultants.com

Ohio DOT Workspace
70\71 East Interchange 2E
www.msconsultants.com

Batchplot Spec: \\msconsultants.com\files\production\03\60\06634_2E\standards\plotdrv\batchplt.spc
Pen Table: \\msconsultants.com\files\Standards\ustn\ohdot\V8i\ms\plotting\pen\V8i_ms_std.tbl
Plot Driver: \\msconsultants.com\files\Standards\ustn\ohdot\v8i\ms\plotting\PDF.pltcfg

34" x 22"

Model: XS_SHEET_795+71.12_TO_796+50.00
Printed: 6/19/2018 @ 8:55:44 AM By: jdouglas
File: N:\03\60\06634_2E\roadway\sheets\105322TXS100.dgn

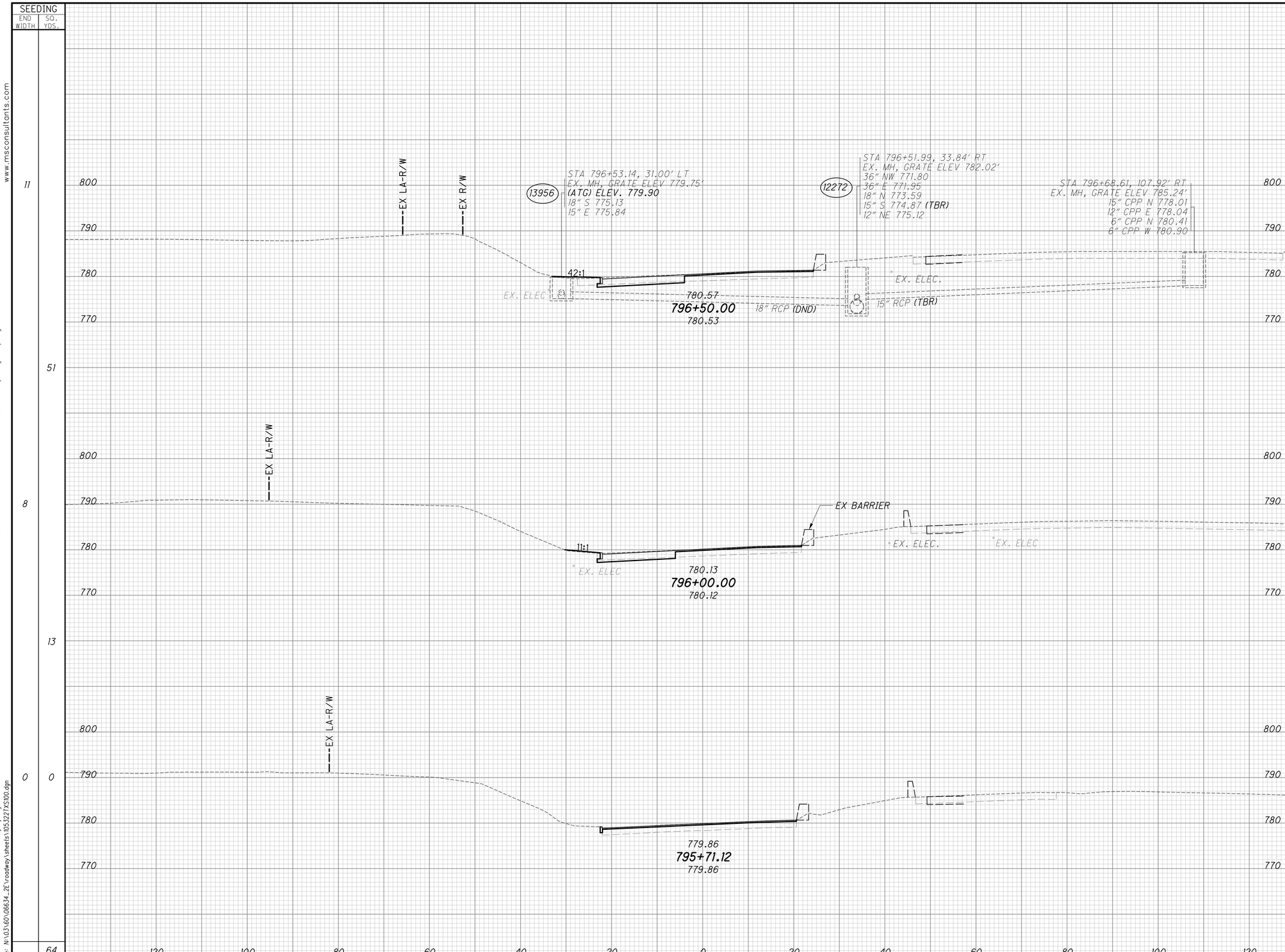

CALCULATED

CHECKED

CROSS SECTIONS TRANS I-71 NB (EAST SIDE)
STA. 795+71.12 TO STA. 796+50.00

FRA-70-14.54

868
2317

ms consultants, inc.

PLOT.CEL

ms consultants, inc.
msconsultants.com

www.msconsultants.com

Ohio DOT Workspace
70\71 East Interchange 2E

0 0.5" 1"

PDF: ohdot\V8i
PDF: 60-06634_2E_Columbus

Batchplot Spec: \\msconsultants.com\files\production\03\60\06634_2E\standards\plotdir\batchplt.spc
Pen Table: \\msconsultants.com\files\Standards\usth\ohdot\V8i\ms\plotting\pen\V8i_ms_std.tbl
Plot Driver: \\msconsultants.com\files\Standards\usth\ohdot\v8i\ms\plotting\PDF.pltcfg

Model: XS_SHEET_797+00.00_TO_798+00.00 - FENCE_VIEW1
Printed: 6/19/2018 @ 8:55:45 AM By: jbougas
File: N:\03\60\06634_2E\roadway\sheets\105321XS100.dgn

34" x 22"

SEEDING END WIDTH	SEEDING SQ. YDS.
51	
	189
17	
	81
12	
63	
	333

EX. R/W
EX LA-R/W
EX R/W

T600 STA 797+80.00, 43.96' LT
MH-3, RIM ELEV 780.47
30" (S) 773.51
30" (E) 773.51

T601 STA 797+80.00, 1.97' LT
MH-3, APP, FLAT TOP SLAB 777.04
30" (N) 773.23
EX. 36" BRICK W 772.73

5:1
12:1
16:1
778.25
780.1
42'-30" TYPE B @ 0.67%
780.71
798+00.00
780.30
SEE TRANS P2 CROSS SECTIONS
EX. ELEC.

EX. R/W
EX LA-R/W
EX R/W

E12 STA 797+50.77, 21.07' LT
MH-3, RIM ELEV 782.36
15" (SW) 776.78
15" (NW) 776.78

E13 STA 797+50.08, 6.42' LT
I-3-D, GRATE ELEV 782.42
15" (NE) 777.09

EX RETAINING WALL
140:1
EX. ELEC.
14'-15" TYPE C @ 2.21%
780.88
36" BRICK
797+50.00
780.65

EX. R/W
EX LA-R/W
EX R/W
EX RETAINING WALL
EX BARRIER
15" RCP
129:1
EX. ELEC.
780.83
797+00.00
780.73
36" BRICK

END AREA CUT	END AREA FILL	VOLUME CUT	VOLUME FILL
109	24		
		157	44
61	23		
		106	39
54	18		
		90	26
		353	109

CALCULATED

CHECKED

CROSS SECTIONS TRANS I-71 NB (EAST SIDE)
STA. 797+00.00 TO STA. 798+00.00

FRA-70-14.54

869
2317

ms consultants, inc.

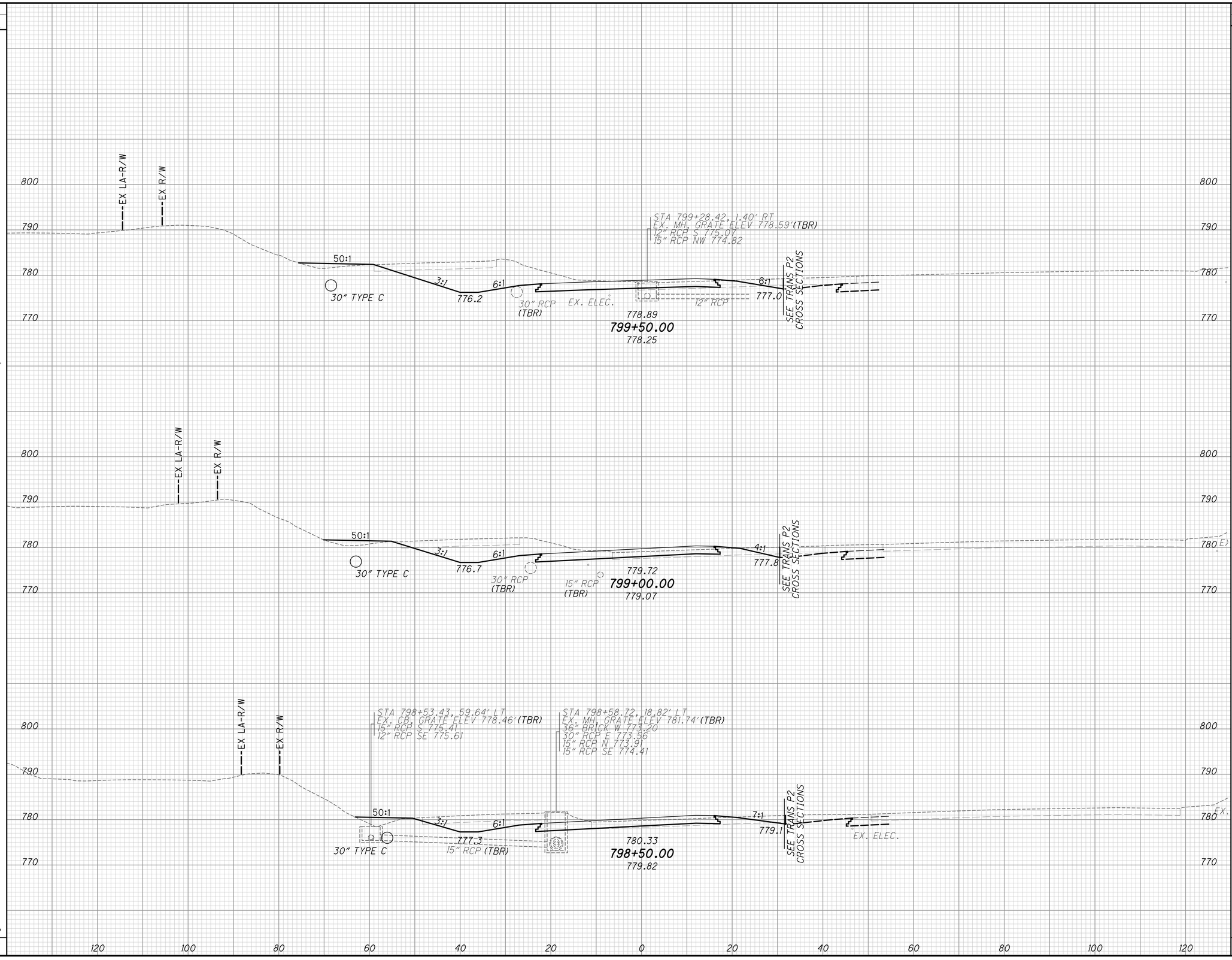

END AREA CUT	END AREA FILL	VOLUME CUT	VOLUME FILL
272	30		
		454	62
218	36		
		365	66
176	35		
		263	55
		1082	183

CALCULATED

CHECKED

CROSS SECTIONS TRANS I-71 NB (EAST SIDE)
STA. 798+50.00 TO STA. 799+50.00

FRA-70-14.54

870
2317

ms consultants, inc.

PLOT.CEL

ms consultants, inc.
msconsultants.com

www.msconsultants.com

Ohio DOT Workspace
70\71 East Interchange 2E

Batchplot Spec: \\msconsultants.com\files\production\03\60\06634_2E\standards\plotdrv\batchplt.spc
Pen Table: \\msconsultants.com\files\Standards\ustn\ohdot\V8i\ms\plotting\pen\V8i_ms_std.tbl
Plot Driver: \\msconsultants.com\files\Standards\ustn\ohdot\v8i\ms\plotting\PDF.pltcfg

34" x 22"

Model: XS_SHEET_798+50.00_TO_799+50.00 Div: FENCE_VIEW1
Printed: 6/19/2018 @ 8:55:46 AM By: jdouglas
File: N:\03\60\06634_2E\roadway\sheets\105322TXS100.dgn

34" x 22"

Model: XS_SHEET_800+00.00_TO_800+26.39
Printed: 6/19/2018 @ 8:55:48 AM By: jdouglas
File: N:\03\60\06634_2E\roadway\sheets\105322TXS100.dgn

Batchplot Spec: \\msconsultants.com\files\production\03\60\06634_2E\standards\plotdrv\batchplt.spc
Pen Table: \\msconsultants.com\files\Standards\ustn\ohdot\V8i\ms\plotting\pen\V8i_ms_std.tbl
Plot Driver: \\msconsultants.com\files\Standards\ustn\ohdot\v8i\ms\plotting\PDF.pltcfg

Cell: FENCE_VIEW1
PCF: ohdotV8i
PCF: 60-06634_2E_Columbus

Ohio DOT Workspace
70\71 East Interchange 2E

ms consultants, inc.
msconsultants.com
www.msconsultants.com

PLOT.CEL

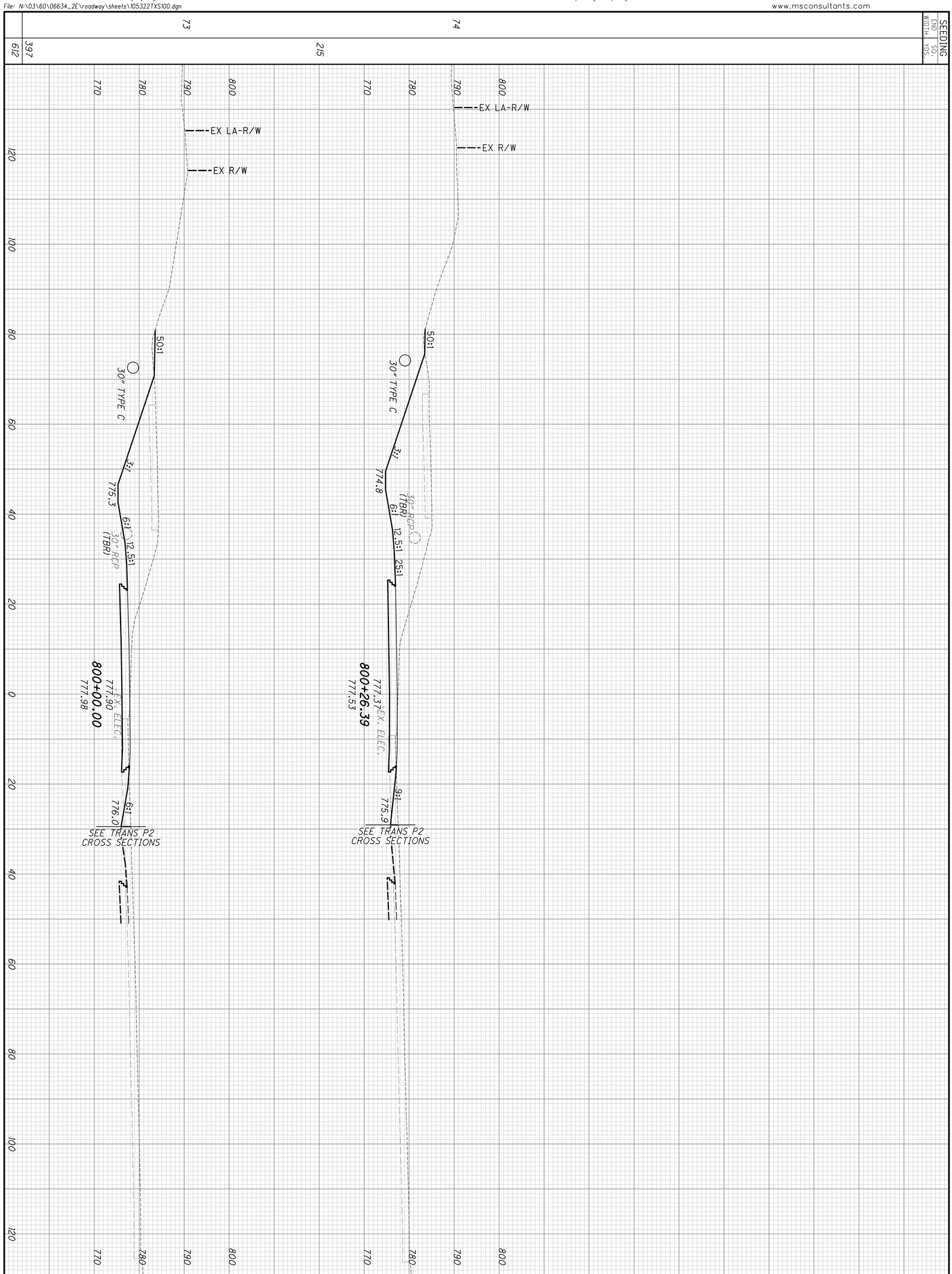

871
2317

FRA-70-14.54

CROSS SECTIONS TRANS I-71 NB (EAST SIDE)
STA. 800+00.00 TO STA. 800+26.39

CALCULATED

CHECKED

ms consultants, inc.

PLOT.CEL

ms consultants, inc.
msconsultants.com

www.msconsultants.com

Ohio DOT Workspace
70\71 East Interchange 2E

0 0.5" 1"

PCF: ohdot\V8i
PCF: 60-06634_2E_Columbus

Batchplot Spec: \\msconsultants.com\Files\Production\03\60\06634_2E\standards\plotdr\batchplt.spc
Pen Table: \\msconsultants.com\Files\Standards\usth\ohdot\V8i\ms\plotting\pen\V8i_ms_std.tbl
Plot Driver: \\msconsultants.com\Files\Standards\usth\ohdot\v8i\ms\plotting\PDF.pltcfg

Model: Sheet
Printed: 6/19/2018 @ 8:55:48 AM
File: N:\03\60\06634_2E\roadway\sheets\105322KS1399.dgn

View: FENCE_VIEW1
By: jdouglas

34" x 22"

SEEDING		END AREA		VOLUME	
END WIDTH	SQ. YDS.	CUT	FILL	CUT	FILL
138	709	892	6	1390	13
118	302	609	8	498	7
113	0	531	7	0	0
	1011			1888	20

CALCULATED MAH
CHECKED BSB

CROSS SECTIONS RAMP P2
STA. 900+26.40 TO STA. 901+00.00

FRA-70-14.54

872
2317

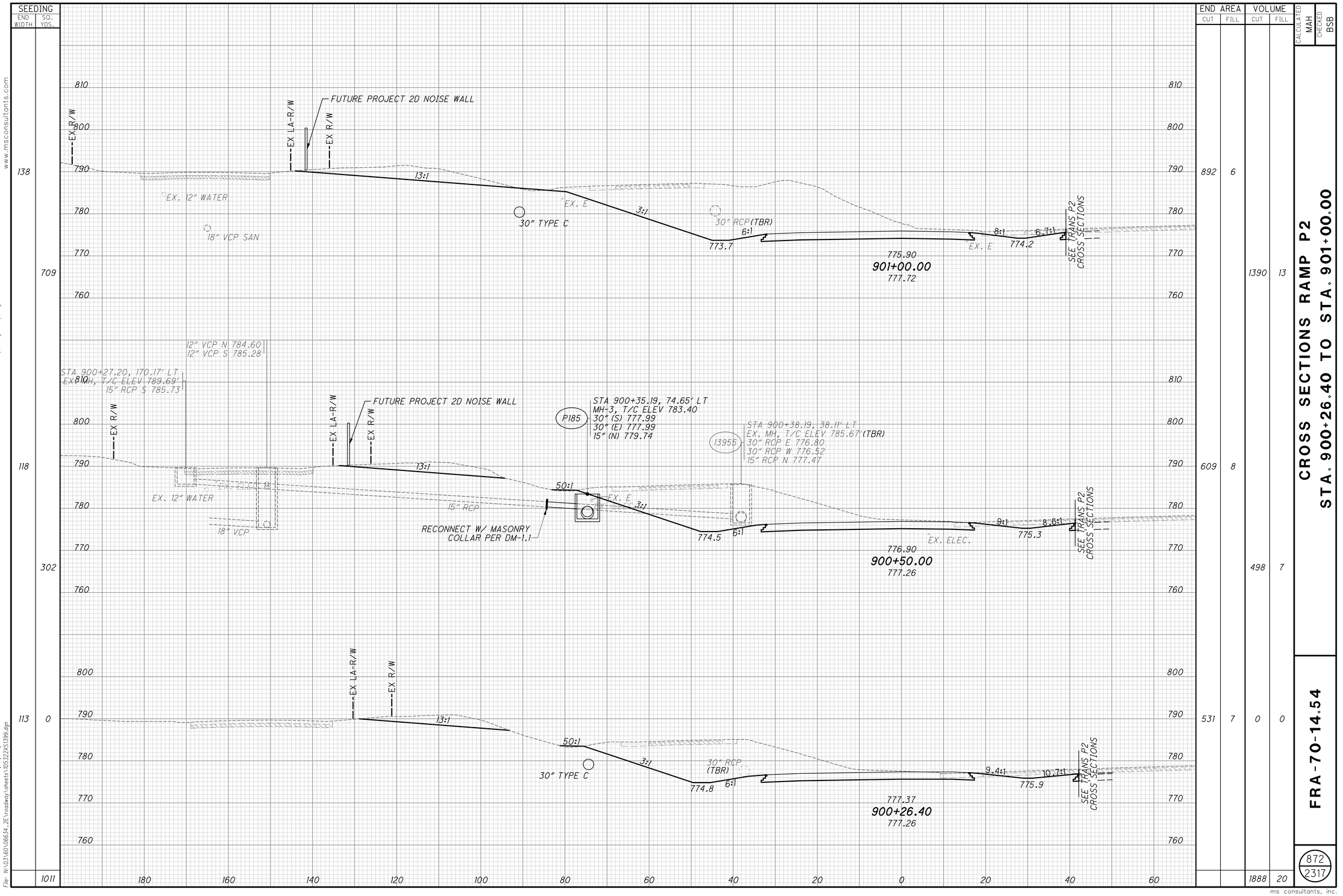

ms consultants, inc.

PLOT.CEL

ms consultants, inc.
msconsultants.com

www.msconsultants.com

Ohio DOT Workspace
70\71 East Interchange 2E

0 0.5" 1"

Batchplot Spec: \\msconsultants.com\files\production\03\60\06634_2E\standards\plotdrv\batchplt.spc
Pen Table: \\msconsultants.com\files\Standards\astm\ohdot\V8i\ms\plotting\pen\V8i_ms_std.tbl PCF: ohdotV8i
Plot Driver: \\msconsultants.com\files\Standards\astm\ohdot\V8i\ms\plotting\PDF.pltcfg PCF: 60-06634_2E_Columbus

Model: Sheet View: FENCE_VIEW1
Printed: 6/19/2018 @ 8:55:49 AM By: jdouglas
File: N:\03\60\06634_2E\roadway\sheets\05322XS400.dgn

34" x 22"

SEEDING	
END WIDTH	SQ. YDS.
156	1624
146	1173
838	2433
786	1913
	4346

END AREA	
CUT	FILL
1455	5
1173	5
2433	9
1913	10
4346	19

VOLUME	
CUT	FILL

CALCULATED MAH
CHECKED BSB

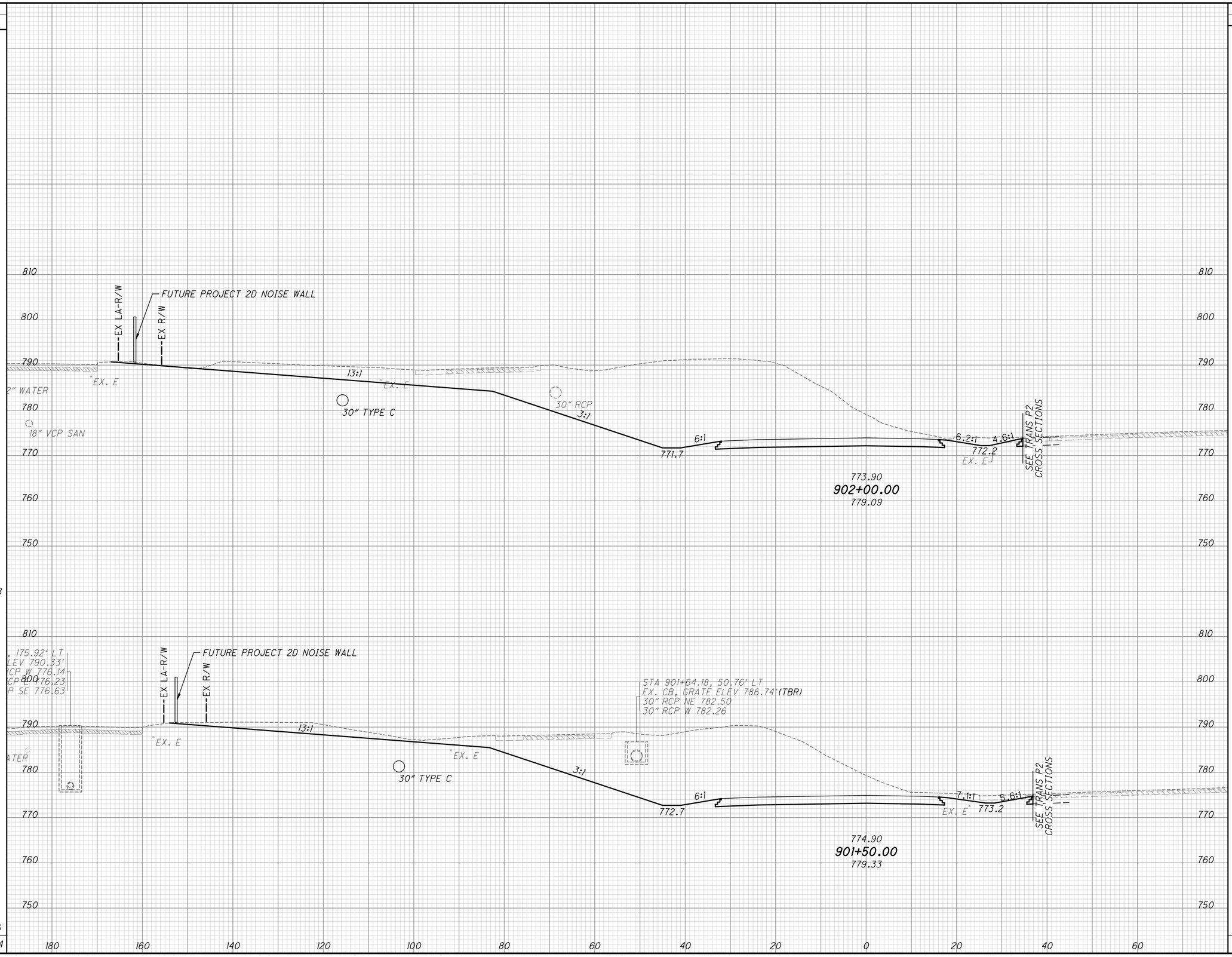

CROSS SECTIONS RAMP P2
STA. 901+50.00 TO STA. 902+00.00

FRA-70-14.54

873
2317

PLOT.CEL

ms consultants, inc.
msconsultants.com

www.msconsultants.com

Ohio DOT Workspace
70\71 East Interchange 2E

0 1" 0.5"

Batchplot Spec: \\msconsultants.com\Files\Production\03\60\06634_2E\standards\plotdrv\batchplt.spc
Pen Table: \\msconsultants.com\Files\Standards\usth\ohdot\V8i\ms\plotting\pen\V8i_ms_std.tbl
Plot Driver: \\msconsultants.com\Files\Standards\usth\ohdot\V8i\ms\plotting\PDF.pltcfg
PDF: ohdotV8i
DCF: 60-06634_2E_Columbus

Model: Sheet
Printed: 6/19/2018 @ 8:55:51 AM
File: N:\03\60\06634_2E\roadway\sheets\105322XS401.dgn
View: FENCE_VIEW1
By: jdouglas

34" x 22"

SEEDING	
END WIDTH	SQ. YDS.
179	951
	887
	1838

END AREA	
CUT	FILL
1989	31
3442	56
1728	29
2947	32
6389	88

VOLUME	
CUT	FILL

CALCULATED MAH
CHECKED BSB

CROSS SECTIONS RAMP P2
STA. 902+50.00 TO STA. 903+00.00

FRA-70-14.54

874
2317

ms consultants, inc.

PLOT.CEL

ms consultants, inc.
msconsultants.com

Ohio DOT Workspace
70\71 East Interchange 2E

www.msconsultants.com

1"
0.5"
0

Batchplot Spec: \\msconsultants.com\files\production\03\60\06634_2E\standards\plotdrv\batchplt.spc
Pen Table: \\msconsultants.com\files\Standards\usth\ohdot\V8i\ms\plotting\pen\V8i_ms_std.tbl
Plot Driver: \\msconsultants.com\files\Standards\usth\ohdot\v8i\ms\plotting\PDF.pltcfg

PDF: ohdot\V8i
DCF: 60-06634_2E_Columbus

Model: Sheet
Printed: 6/19/2018 @ 8:55:52 AM
File: N:\03\60\06634_2E\roadway\sheets\105322XS402.dgn

View: FENCE_VIEW1
By: jdouglas

34" x 22"

SEEDING	
END WIDTH	SQ. YDS.
18	206
110	256
110	256
	802
	1264

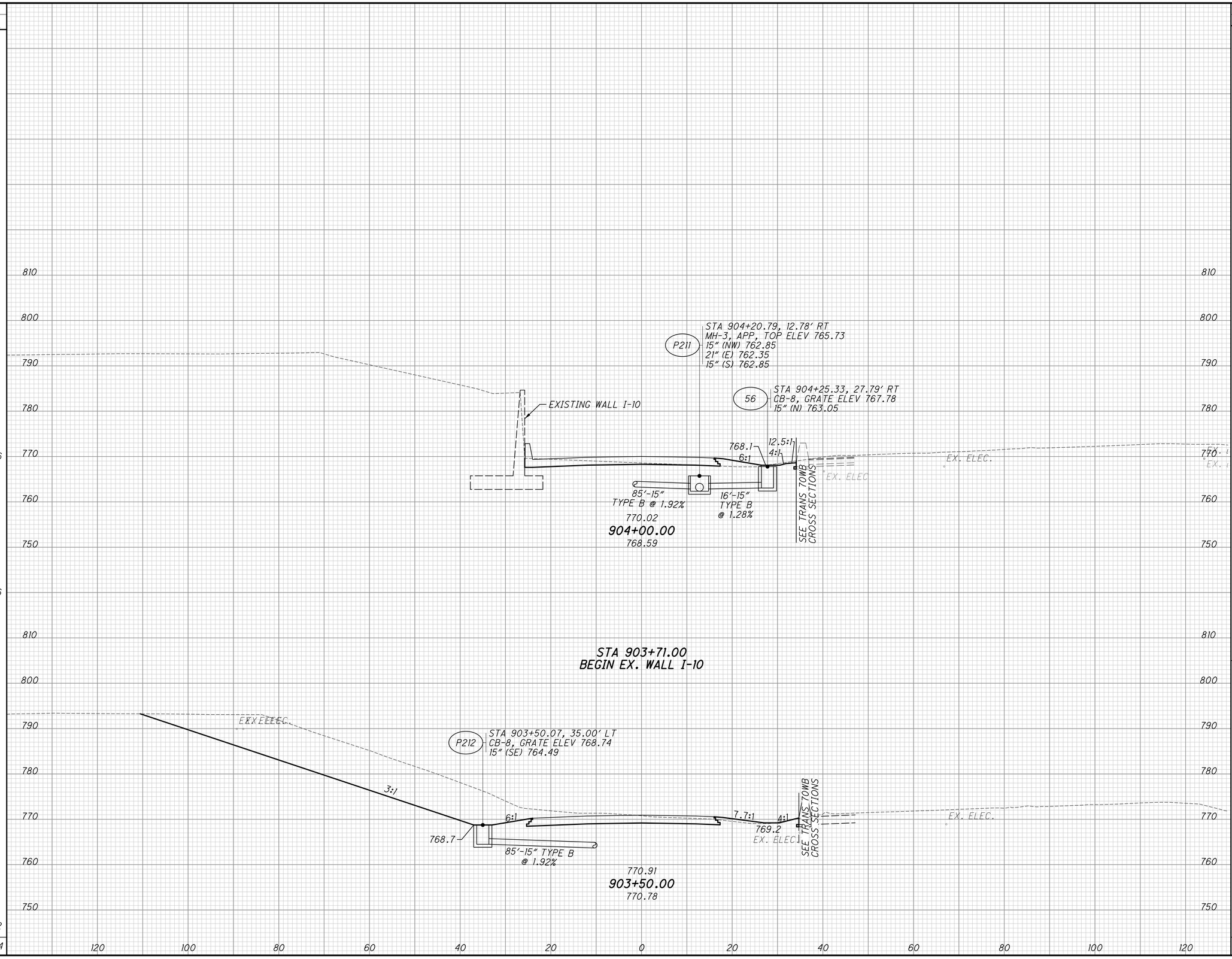

END AREA	
CUT	FILL
33	11
33	11
672	8
672	8

VOLUME	
CUT	FILL
35	12
AH	
BK	
523	6
2464	36
3022	54

CALCULATED MAH
CHECKED BSB

CROSS SECTIONS RAMP P2
STA. 903+50.00 TO STA. 904+00.00

FRA-70-14.54

875
2317

ms consultants, inc.

PLOT.CEL

ms consultants, inc.
msconsultants.com

www.msconsultants.com

Ohio DOT Workspace
70\71 East Interchange 2E

1" 0.5" 0

PDF: ohdot\V8i
PDF: 60-06634_2E_Columbus

Batchplot Spec: \\msconsultants.com\files\production\03\60\06634_2E\standards\plotdr\batchplt.spc
Pen Table: \\msconsultants.com\files\Standards\usth\ohdot\V8i\ms\plotting\pen\V8i_ms_std.tbl
Plot Driver: \\msconsultants.com\files\Standards\usth\ohdot\v8i\ms\plotting\PDF.pltcfg

Model: Sheet
Printed: 6/19/2018 @ 8:55:53 AM
File: N:\03\60\06634_2E\roadway\sheets\105322X1403.dgn

View: FENCE_VIEW1
By: jdoughas

34" x 22"

SEEDING	
END WIDTH	SQ. YDS.
11	
66	
13	
87	
153	

END AREA	
CUT	FILL
32	13
50	10
153	40

VOLUME	
CUT	FILL
76	21
77	19

CALCULATED MAH
CHECKED BSB

CROSS SECTIONS RAMP P2
STA. 904+50.00 TO STA. 905+00.00

FRA-70-14.54

876
2317

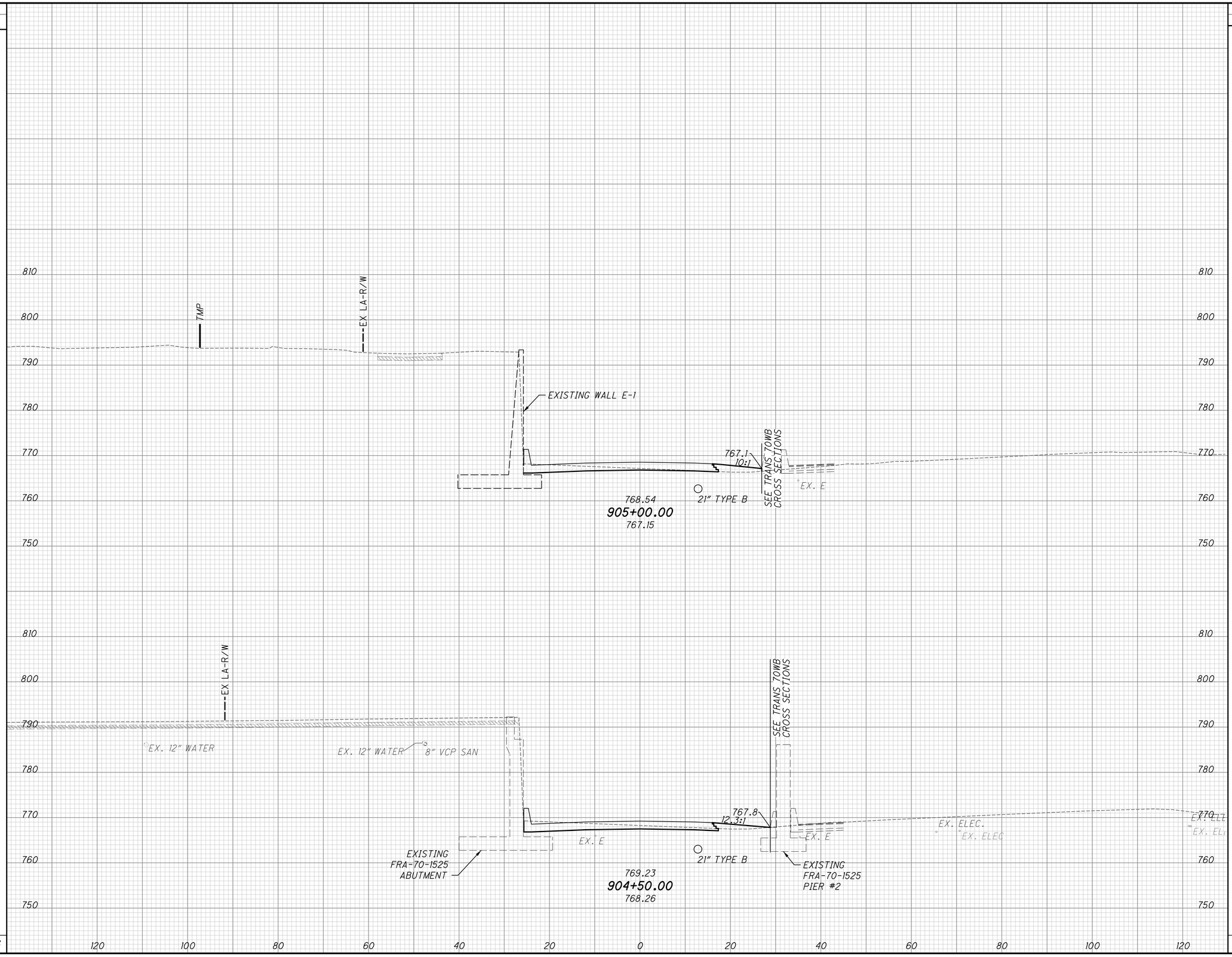

PLOT.CEL

ms consultants, inc.
msconsultants.com

www.msconsultants.com

Ohio DOT Workspace
70\71 East Interchange 2E

0 0.5" 1"

PCF: ohdot\V8i
PCF: 60-06634_2E_Columbus

Batchplot Spec: \\msconsultants.com\Files\Production\03\60\06634_2E\standards\plotdrv\batchplt.spc
Pen Table: \\msconsultants.com\Files\Standards\usth\ohdot\V8i\ms\plotting\pen\V8i_ms_std.tbl
Plot Driver: \\msconsultants.com\Files\Standards\usth\ohdot\v8i\ms\plotting\PDF.pltcfg

34" x 22"

View: FENCE_VIEW1
By: jdouglas

Model: Sheet
Printed: 6/19/2018 @ 8:55:55 AM
File: N:\03\60\06634_2E\roadway\sheets\105322X1404.dgn

SEEDING	
END WIDTH	SQ. YDS.
10	
57	
11	
61	
118	

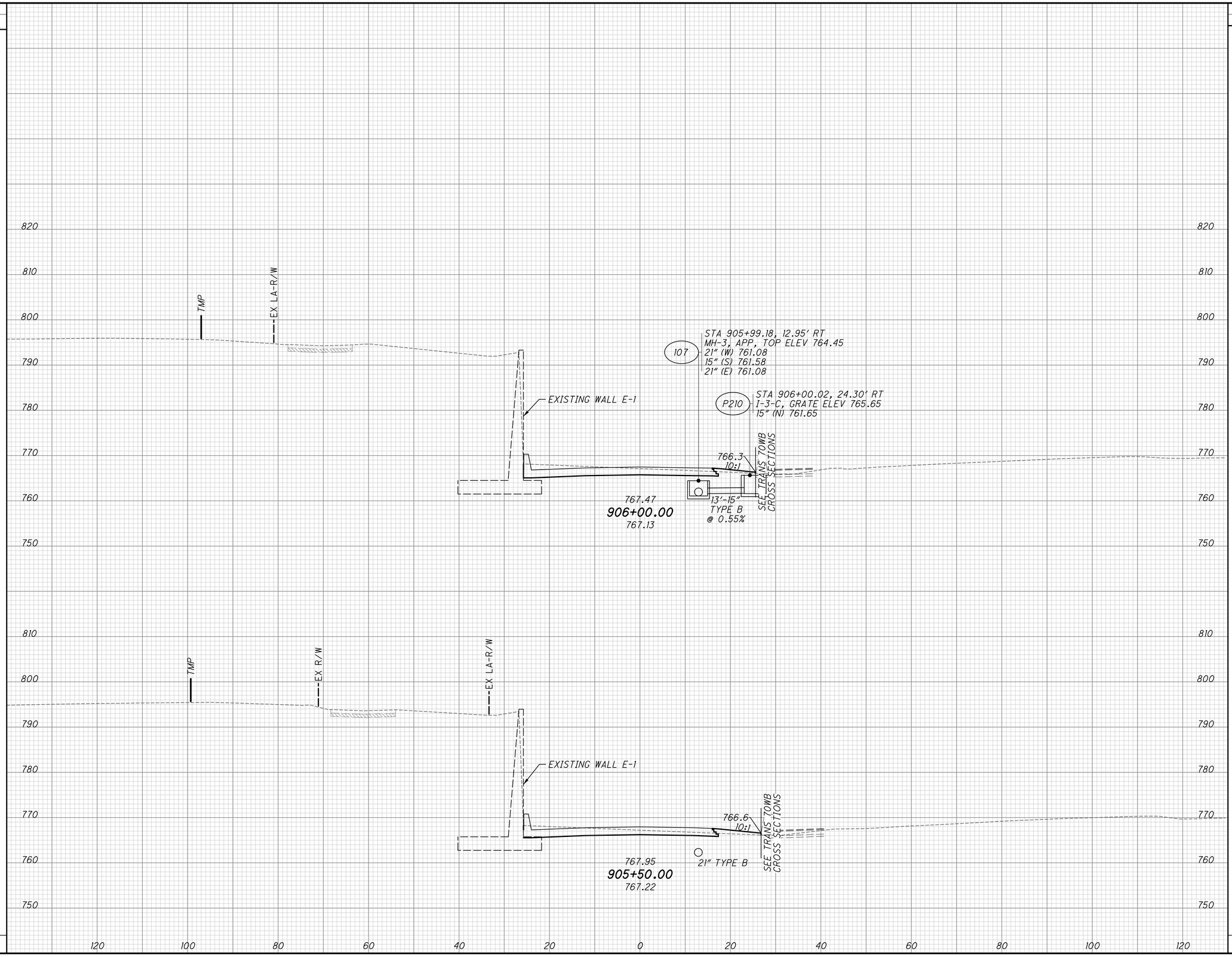

END AREA		VOLUME	
CUT	FILL	CUT	FILL
77	5		
		126	12
60	8		
		85	19
		211	31

CALCULATED MAH
CHECKED BSB

CROSS SECTIONS RAMP P2
STA. 905+50.00 TO STA. 906+00.00

FRA-70-14.54

877
2317

PLOT.CEL

ms consultants, inc.
msconsultants.com

www.msconsultants.com

Ohio DOT Workspace
70\71 East Interchange 2E

1"
0.5"
0

Batchplot Spec: \\msconsultants.com\files\production\03\60\06634_2E\standards\plotdrv\batchplt.spc
Pen Table: \\msconsultants.com\files\Standards\ustn\ohdot\V8i\ms\plotting\pen\V8i_ms_std.tbl PCF: ohdotV8i
Plot Driver: \\msconsultants.com\files\Standards\ustn\ohdot\v8i\ms\plotting\PDF.pltcfg PCF: 60-06634_2E_Columbus

34" x 22"

Model: Sheet View: FENCE_VIEW1
Plotted: 6/19/2018 @ 8:55:56 AM By: jdoughas
File: N:\03\60\06634_2E\roadway\sheets\105322X5405.dgn

SEEDING	
END WIDTH	SQ. YDS.
0	0
0	0
0	0
0	27
	27

EX R/W
EX R/W
LA-R/W
EX LA-R/W

STA 907+24.49, 15.59' LT
MH-3, APP, FLAT SLAB TOP 763.53
22" x 34" (E) 759.95
15" (N) 760.95
22" x 34" (SW) 759.95
50
EXISTING WALL E-1
SEE TRANS 70WB CROSS SECTIONS
60'-22" X 34" TYPE B @ 3.98%
STA 907+24.54, 22.41' LT
I-3-D, GRATE ELEV 765.91
15" (S) 761.66
60
766.80
907+33.78
765.86

EX R/W
EX R/W
EX LA-R/W
EXISTING WALL E-1
SEE TRANS 70WB CROSS SECTIONS
22" X 34" TYPE B
766.84
907+00.00
766.05

EX R/W
EX LA-R/W
EXISTING WALL E-1
SEE TRANS 70WB CROSS SECTIONS
767.08
906+50.00
765.99

800 790 780 770 760 810 820 750

120 100 80 60 40 20 0 20 40 60 80 100 120

END AREA		VOLUME	
CUT	FILL	CUT	FILL
48	0		
52	0	62	0
87	0		
42	0		
110	5		
259	5		

CALCULATED MAH
CHECKED BSB

CROSS SECTIONS RAMP P2
STA. 906+50.00 TO STA. 907+33.78

FRA-70-14.54

878
2317

ms consultants, inc.

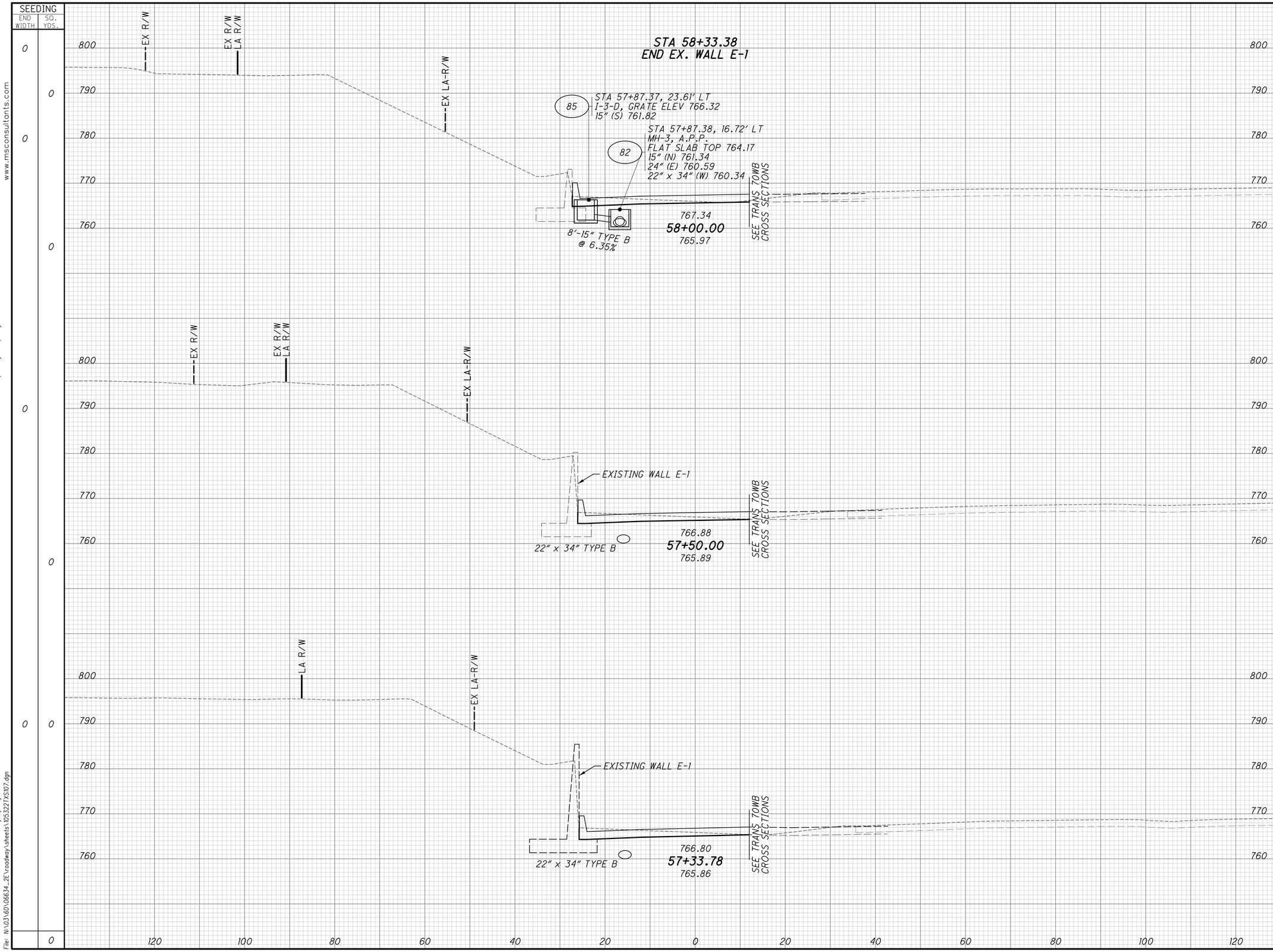

SEEDING END WIDTH	SEEDING SQ. YDS.	END AREA CUT	END AREA FILL	VOLUME CUT	VOLUME FILL
0		75	5	AH	
	0	36	0	BK	
0				44	0
	0	36	0		
				75	0
0		46	0		
	0			28	0
0	0	48	0	0	0
	0			147	0

CALCULATED

CHECKED

CROSS SECTIONS TRANS RAMP P2 (EAST)
STA. 57+33.78 TO STA. 58+00.00

FRA-70-14.54

879
2317

ms consultants, inc.

PLOT.CEL

ms consultants, inc.
msconsultants.com

Ohio DOT Workspace
70\71 East Interchange 2E
www.msconsultants.com

Batchplot Spec: \\msconsultants.com\files\production\03\60\06634_2E\standards\plotdrv\batchplt.spc
Pen Table: \\msconsultants.com\files\Standards\ustn\ohdot\V8i\ms\plotting\pen\V8i_ms_std.tbl
Plot Driver: \\msconsultants.com\files\Standards\ustn\ohdot\v8i\ms\plotting\PDF.pltcfg

34" x 22"

Model: XS_SHEET_57+33.78_TO_58+00.00 View: FENCE_VIEW1
Printed: 6/19/2018 @ 8:55:57 AM By: jdouglas
File: N:\03\60\06634_2E\roadway\sheets\105322TXS107.dgn

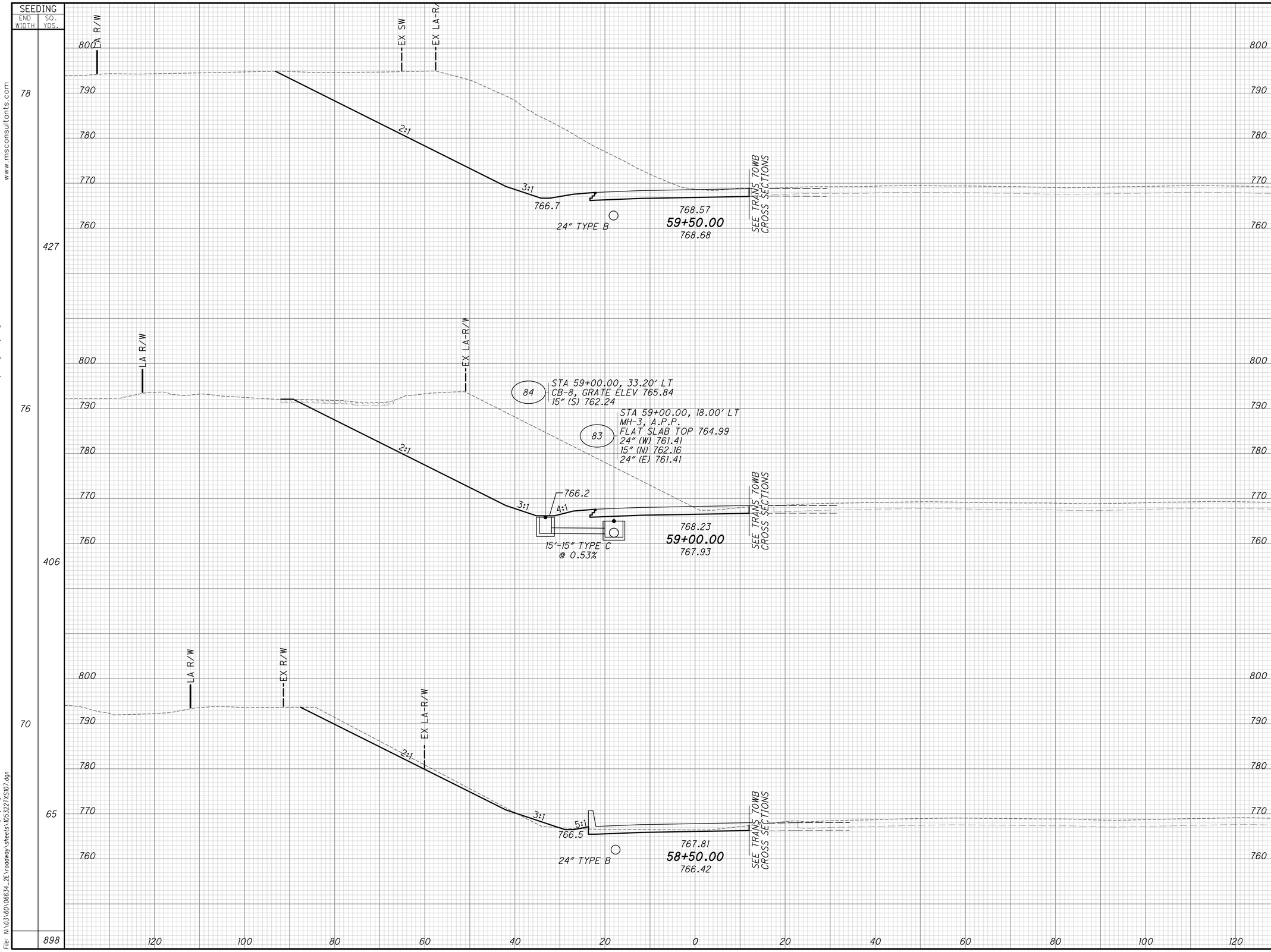

END AREA CUT	END AREA FILL	VOLUME CUT	VOLUME FILL
1090	1		
		1992	4
1062	3		
		1050	8
72	5		
		45	3
		3087	15

CALCULATED

CHECKED

CROSS SECTIONS TRANS RAMP P2 (EAST)
STA. 58+50.00 TO STA. 59+50.00

FRA-70-14.54

880
2317

ms consultants, inc.

PLOT.CEL

ms consultants, inc.
msconsultants.com

Ohio DOT Workspace
70\71 East Interchange 2E
www.msconsultants.com

Batchplot Spec: \\msconsultants.com\files\production\03\60\06634_2E\standards\plotdrv\batchplt.spc
Pen Table: \\msconsultants.com\files\Standards\ustn\ohdot\V8i\ms\plotting\pen\V8i_ms_std.tbl
Plot Driver: \\msconsultants.com\files\Standards\ustn\ohdot\v8i\ms\plotting\PDF.pltcfg

34" x 22"

Model: XS_SHEET_58+50.00_TO_59+50.00View: FENCE_VIEW1
Printed: 6/19/2018 @ 8:55:58 AM By: jdouglas
File: N:\03\60\06634_2E\roadway\sheets\105322TXS107.dgn

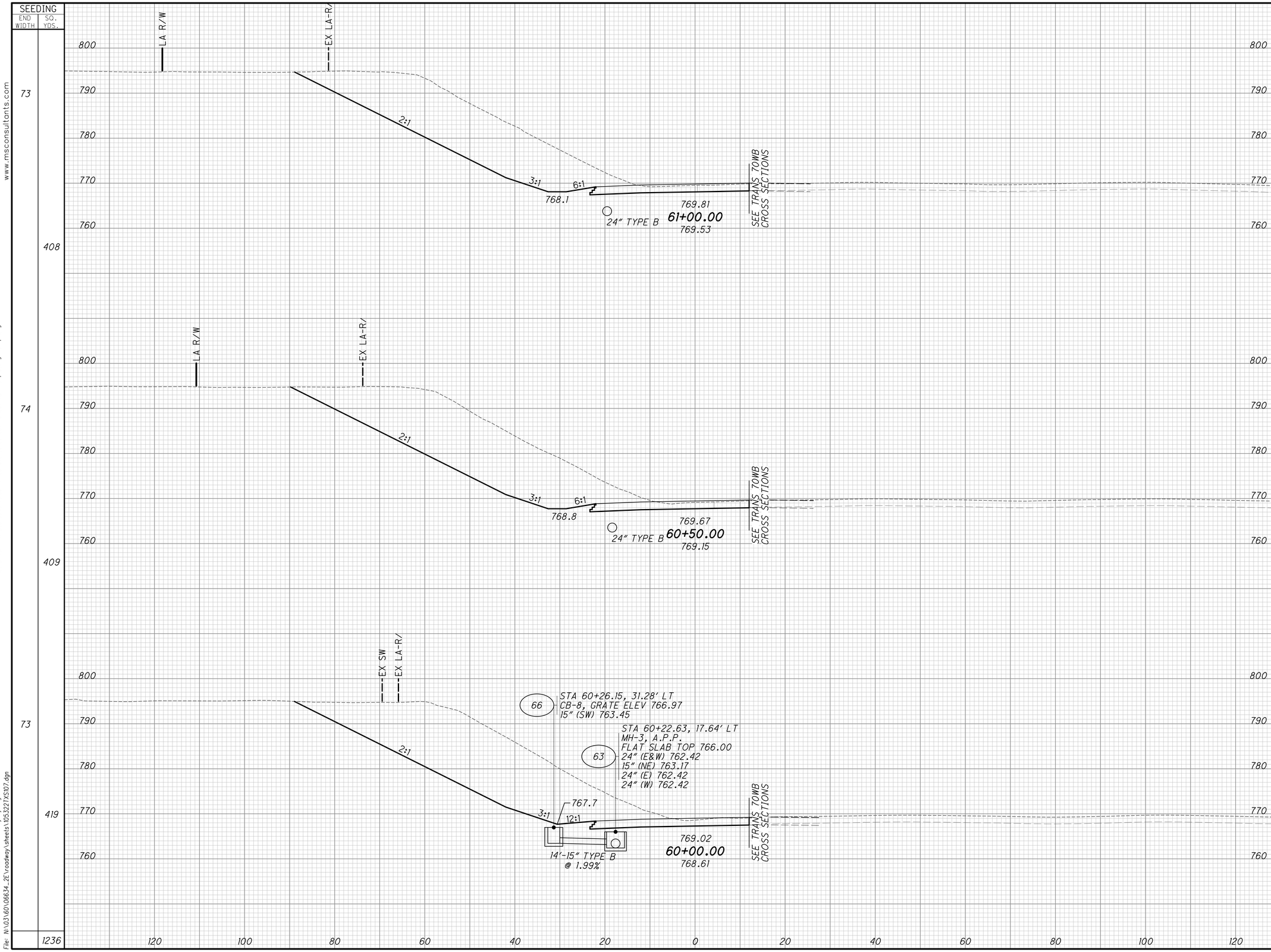

END AREA CUT	END AREA FILL	VOLUME CUT	VOLUME FILL
695	1		
		1381	2
796	1		
		1519	2
845	1		
		1791	2
		4691	6

CALCULATED

CHECKED

CROSS SECTIONS TRANS RAMP P2 (EAST)
STA. 60+00.00 TO STA. 61+00.00

FRA-70-14.54

881
2317

ms consultants, inc.

PLOT.CEL

ms consultants, inc.
msconsultants.com

www.msconsultants.com

Ohio DOT Workspace
70\71 East Interchange 2E

Batchplot Spec: \\msconsultants.com\files\production\03\60\06634_2E\standards\plotdrv\batchplt.spc
Pen Table: \\msconsultants.com\files\Standards\ustn\ohdot\V8i\ms\plotting\pen\V8i_ms_std.tbl
Plot Driver: \\msconsultants.com\files\Standards\ustn\ohdot\v8i\ms\plotting\PDF.pltcfg

34" x 22"

Model: XS_SHEET_60+00.00_TO_61+00.00View: FENCE_VIEW1
Printed: 6/19/2018 @ 8:55:59 AM By: jdouglas
File: N:\03\60\06634_2E\roadway\sheets\105322TXS107.dgn

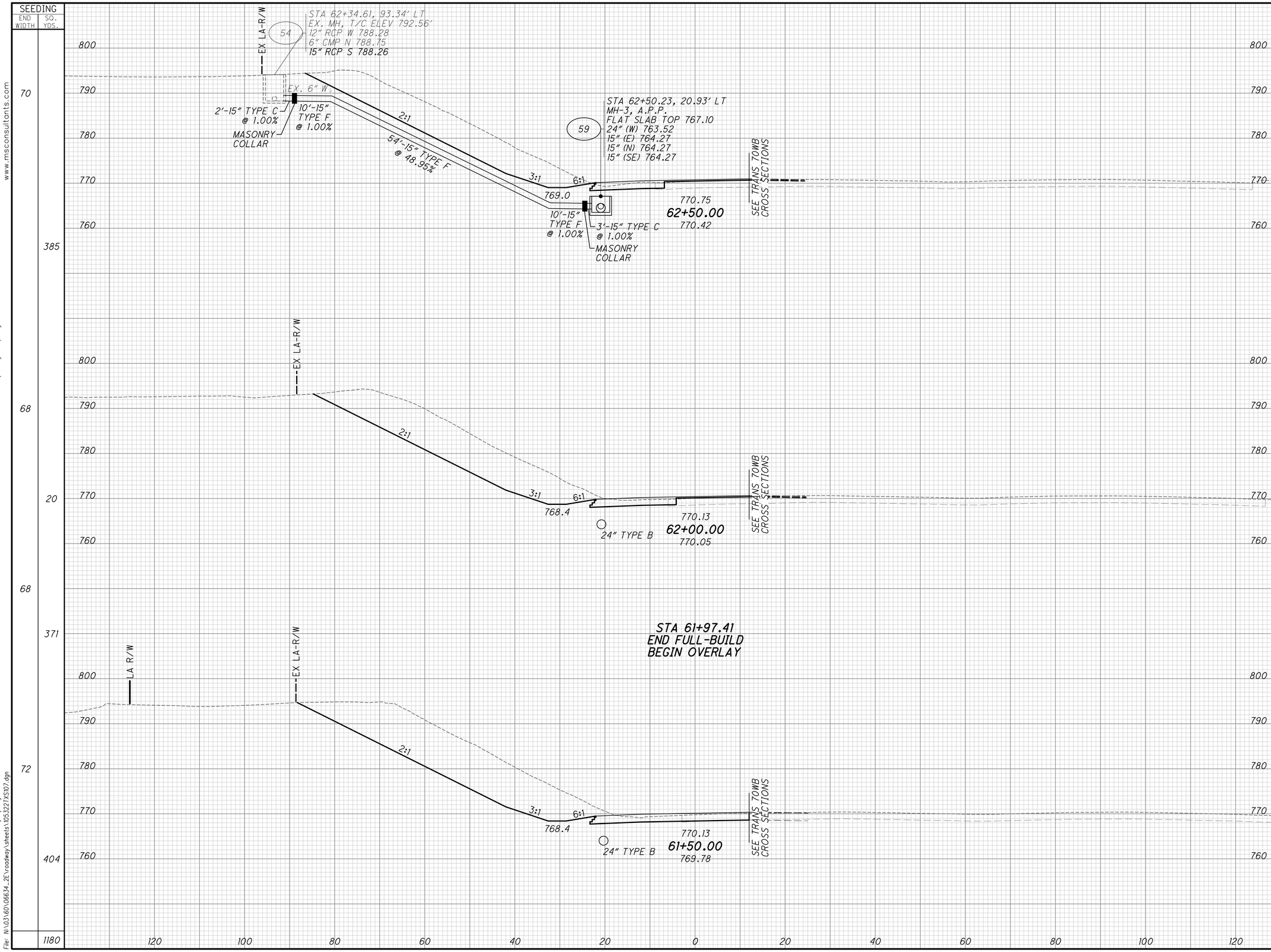

END AREA CUT	END AREA FILL	VOLUME CUT	VOLUME FILL
370	2		
		755	2
445	1		
		43	0
445	1	AH	
472	3	BK	
		912	4
566	2		
		1168	3
		2878	9

CALCULATED

CHECKED

CROSS SECTIONS TRANS RAMP P2 (EAST)
STA. 61+50.00 TO STA. 62+50.00

FRA-70-14.54

882
2317

ms consultants, inc.

PLOT.CEL

ms consultants, inc.
msconsultants.com

Ohio DOT Workspace
70\71 East Interchange 2E
www.msconsultants.com

Batchplot Spec: \\msconsultants.com\files\production\03\60\06634_2E\standards\plotdrv\batchplt.spc
Pen Table: \\msconsultants.com\files\Standards\ustn\ohdot\V8i\ms\plotting\pen\V8i_ms_std.tbl
Plot Driver: \\msconsultants.com\files\Standards\ustn\ohdot\v8i\ms\plotting\PDF.pltcfg

34" x 22"

Model: XS_SHEET_61+50.00_TO_62+50.00View: FENCE_VIEW1
Printed: 6/19/2018 @ 8:56:00 AM By: jdouglas
File: N:\03\60\06634_2E\roadway\sheets\105322TXS107.dgn

34" x 22"

Model: XS_SHEET_63+00.00_TO_63+71.63view: FENCE_VIEW1
Printed: 6/19/2018 @ 8:56:01 AM By: jdouglas
File: N:\03\60\06634_2E\roadway\sheets\105322TXS107.dgn

Batchplot Spec: \\msconsultants.com\files\production\03\60\06634_2E\standards\plotdrv\batchplt.spc
Pen Table: \\msconsultants.com\files\Standards\ustn\ohdot\V8i\ms\plotting\pen\V8i_ms_std.tbl
Plot Driver: \\msconsultants.com\files\Standards\ustn\ohdot\v8i\ms\plotting\PDF.pltcfg

PCF: ohdotV8i
PCF: 60-06634_2E_Columbus

0 1"
0.5"

Ohio DOT Workspace
70\71 East Interchange 2E

ms consultants, inc.
msconsultants.com

PLOT.CEL

www.msconsultants.com

SEEDING		
	END WIDTH	SQ. YDS.
960	71	393
	71	396
	71	171

EX LA-R/W

EX. 6' W.

2:1

3:1

6:1

769.3

771.04
63+00.00
770.70

15" TYPE B

SEE TRANS 70WB CROSS SECTIONS

EX LA-R/W

2:1

3:1

6:1

769.6

771.28
63+50.00
770.92

15" TYPE B

SEE TRANS 70WB CROSS SECTIONS

EX LA-R/W

2:1

3:1

6:1

769.7

771.39
63+71.63
771.00

SEE TRANS 70WB CROSS SECTIONS

E3

STA 239+49.58, 8.26' RT
1-3'-C1, GRATE ELEV 770.63
15" (NW) 765.30

END AREA		
	CUT	FILL
	305	2
	214	3
	173	3

VOLUME		
	CUT	FILL
1262	626	4
	481	5
11	155	2

ms consultants, inc.

883
2317

FRA-70-14.54

CROSS SECTIONS TRANS RAMP P2 (EAST)
STA. 63+00.00 TO STA. 63+71.63

CALCULATED

CHECKED

PLOT.CEL

ms consultants, inc.
msconsultants.com

Ohio DOT Workspace
70\71 East Interchange 2E

www.msconsultants.com

0 1" 0.5"

Batchplot Spec: \\msconsultants.com\files\production\Q3\60\06634_2E\standards\plotdir\batchplt.spc
Pen Table: \\msconsultants.com\files\Standards\ustn\ohdot\V8i\ms\plotting\pen\V8i_ms_std.tbl PCF: ohdot_V8i
Plot Driver: \\msconsultants.com\files\Standards\ustn\ohdot\v8i\ms\plotting\PDF.pltcfg PCF: 60-06634_2E_Columbus

Model: Sheet Date: 6/19/2018 @ 8:56:02 AM View: FENCE_VIEW1
Printed: 6/19/2018 By: jdougas
File: N:\03\60\06634_2E\roadway\sheets\105322XS135.dgn

34" x 22"

SEEDING	
END WIDTH	SQ. YDS.
4	
	20
3	
	0
	20

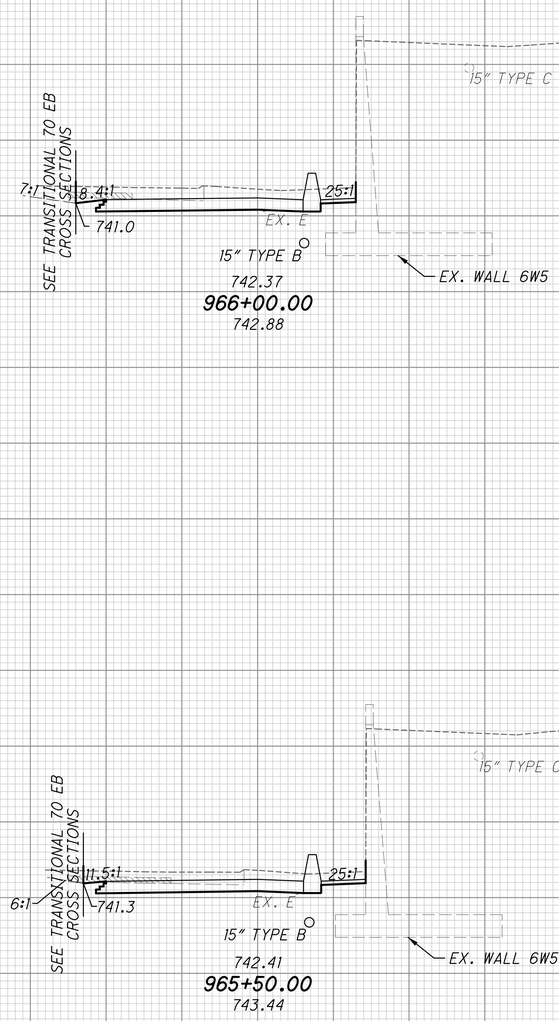

END AREA		VOLUME	
CUT	FILL	CUT	FILL
97	1		
83	1		
		166	2
		0	0
		166	2

CALCULATED MAH
CHECKED BSB

CROSS SECTIONS TRANS. RAMP N1
STA. 965+50.00 TO STA. 966+00.00

FRA-70-14.54

884
2317

ms consultants, inc.

PLOT.CEL

ms consultants, inc.
msconsultants.com

www.msconsultants.com

Ohio DOT Workspace
70\71 East Interchange 2E

0 0.5" 1"

34" x 22"

Batchplot Spec: \\msconsultants.com\files\production\Q3\60\06634_2E\standards\oladr\batchplt.spc
Pen Table: \\msconsultants.com\files\Standards\usth\ohdot\V8i\ms\plotting\pen\V8i_ms_std.tbl PCF: ohdotV8i
Plot Driver: \\msconsultants.com\files\Standards\usth\ohdot\v8i\ms\plotting\PDF.pltcfg PCF: 60-06634_2E_Columbus

Model: Sheet View: FENCE_VIEW1
Printed: 6/19/2018 @ 8:56:04 AM By: jdouglas
File: N:\Q3\60\06634_2E\roadway\sheets\05322XS1336.dgn

SEEDING	
END WIDTH	SQ. YDS.
7	
29	
29	

END AREA	
CUT	FILL

VOLUME	
CUT	FILL
116	1
197	2
197	2

CALCULATED MAH
CHECKED BSB

CROSS SECTIONS TRANS. RAMP N1

STA. 966+50.00

FRA-70-14.54

885
2317

END TRANS. RAMP N1
STA. 966+99.83

790 780 770 760 750 740 730 720

120 100 80 60 40 20 0 20 40 60 80 100 120

79 — TN1 STA 966+57.69, 4.75' RT
I-3-B, GRATE ELEV 741.23
15" (W) 735.39
15" (NW) 735.39

72 — TN1 STA 966+35.82,
25.81' LT
CB-8, GRATE ELEV 740.85
15" (SE) 735.18
18" (E) 734.93

EX LA-R/W

EX SW

21" VCP SAN

N150 — STA 967+04.87, 34.38' LT.
MH-3, RIM ELEV 764.77
15" (E) 761.30
15" (W) 761.30

SEE TRANSITIONAL 70 EB CROSS SECTIONS

6:1

8:1

25:1

740.9

EX. E°

39'-15" TYPE B @ 0.55%

EX. WALL 6W5

742.20
966+50.00
742.53

ms consultants, inc.

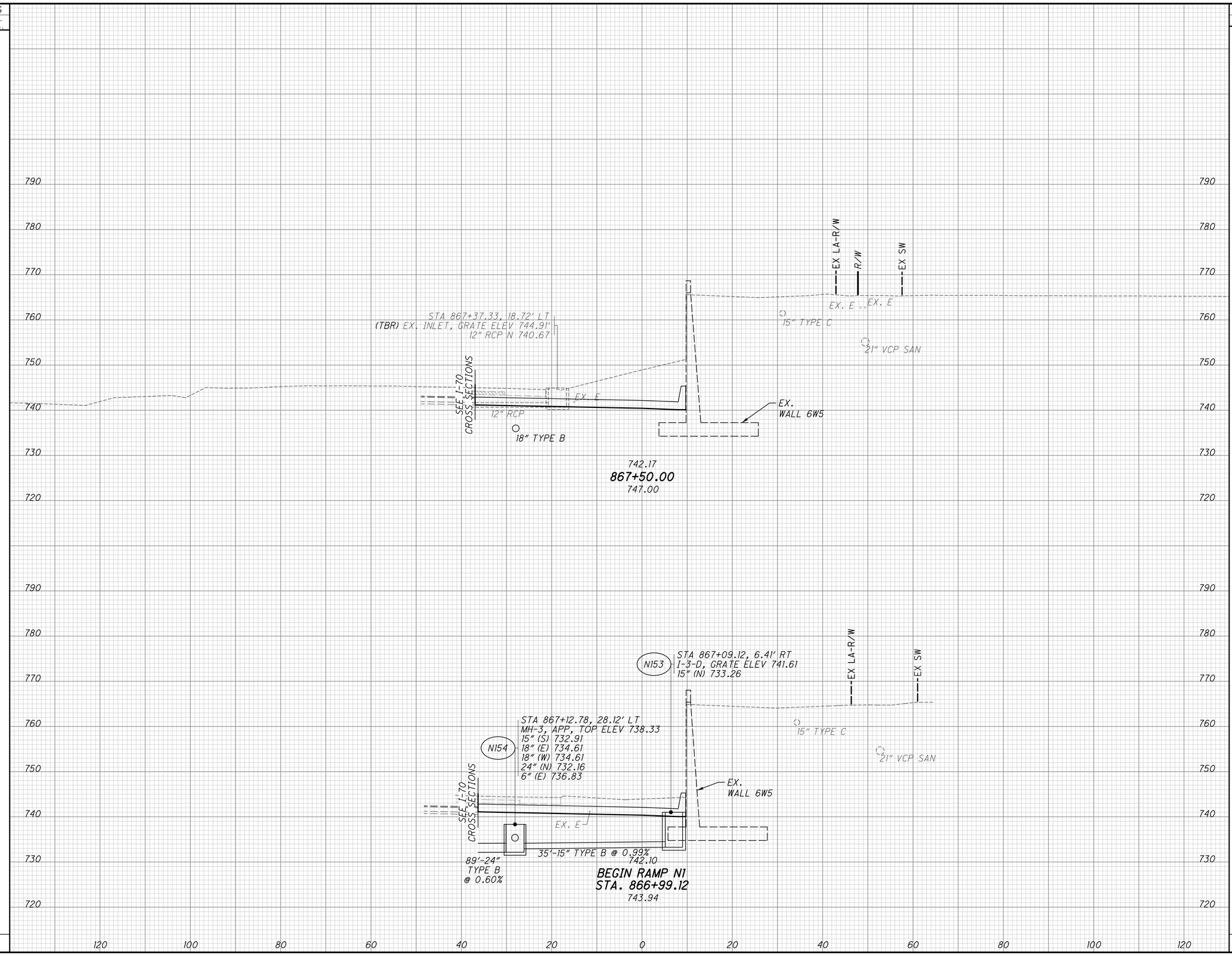

END AREA CUT	END AREA FILL	VOLUME CUT	VOLUME FILL
272	0		
		406	0
160	0	0	0
		406	0

CALCULATED MAH
CHECKED BSB

CROSS SECTIONS RAMP N1
STA. 866+99.12 TO STA. 867+50.00

FRA-70-14.54

886
2317

ms consultants, inc.

PLOT.CEL

ms consultants, inc.
msconsultants.com

www.msconsultants.com

Ohio DOT Workspace
70\71 East Interchange 2E

Batchplot Spec: \\msconsultants.com\files\production\03\60\06634_2E\standards\plotdrv\batchplt.spc
Pen Table: \\msconsultants.com\files\Standards\ustn\ohdot\V8i\ms\plotting\pen\V8i_ms_std.tbl
Plot Driver: \\msconsultants.com\files\Standards\ustn\ohdot\V8i\ms\plotting\PDF.pltcfg

34" x 22"

View: FENCE_VIEW1
By: jdouglas
Model: Sheet
Printed: 6/19/2018 @ 8:56:06 AM
File: N:\03\60\06634_2E\roadway\sheets\105322XS1337.dgn

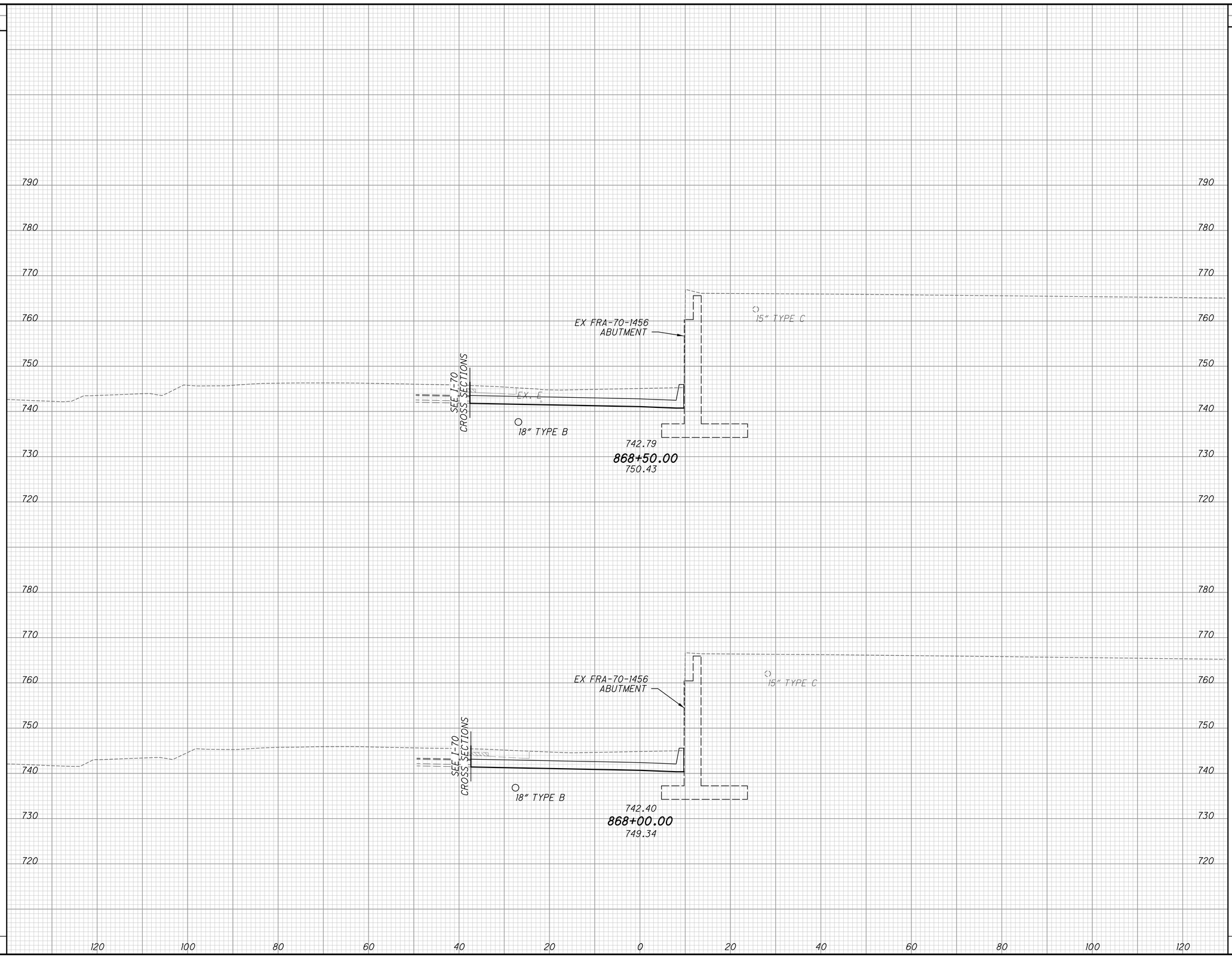

SEEDING END WIDTH	SEEDING SQ. YDS.	END AREA CUT	END AREA FILL	VOLUME CUT	VOLUME FILL
0		178	0		
	0			334	0
0		183	0		
	0			421	0
	0			755	0

CALCULATED MAH
CHECKED BSB

CROSS SECTIONS RAMP N1
STA. 868+00.00 TO STA. 868+50.00

FRA-70-14.54

887
2317

ms consultants, inc.

PLOT.CEL

ms consultants, inc.
msconsultants.com

Ohio DOT Workspace
70\71 East Interchange 2E
www.msconsultants.com

Batchplot Spec: \\msconsultants.com\files\production\03\60\06634_2E\standards\plotdrv\batchplt.spc
Pen Table: \\msconsultants.com\files\Standards\ustn\ohdot\V8i\ms\plotting\pen\V8i_ms_std.tbl
Plot Driver: \\msconsultants.com\files\Standards\ustn\ohdot\v8i\ms\plotting\PDF.pltcfg

34" x 22"

View: FENCE_VIEW1
By: jdouglas
Model: Sheet
Printed: 6/19/2018 @ 8:56:07 AM
File: N:\03\60\06634_2E\roadway\sheets\105322XS1338.dgn

PLOT.CEL

ms consultants, inc.
msconsultants.com

Ohio DOT Workspace
70\71 East Interchange 2E
www.msconsultants.com

Batchplot Spec: \\msconsultants.com\files\production\03\60\06634_2E\standards\plotdrv\batchplt.spc
Pen Table: \\msconsultants.com\files\Standards\ustn\ohdot\V8i\ms\plotting\pen\V8i_ms_std.tbl
Plot Driver: \\msconsultants.com\files\Standards\ustn\ohdot\v8i\ms\plotting\PDF.pltcfg

34" x 22"

View: FENCE_VIEW1
By: jdouglas
Model: Sheet
Printed: 6/19/2018 @ 8:56:08 AM
File: N:\03\60\06634_2E\roadway\sheets\105322XS1339.dgn

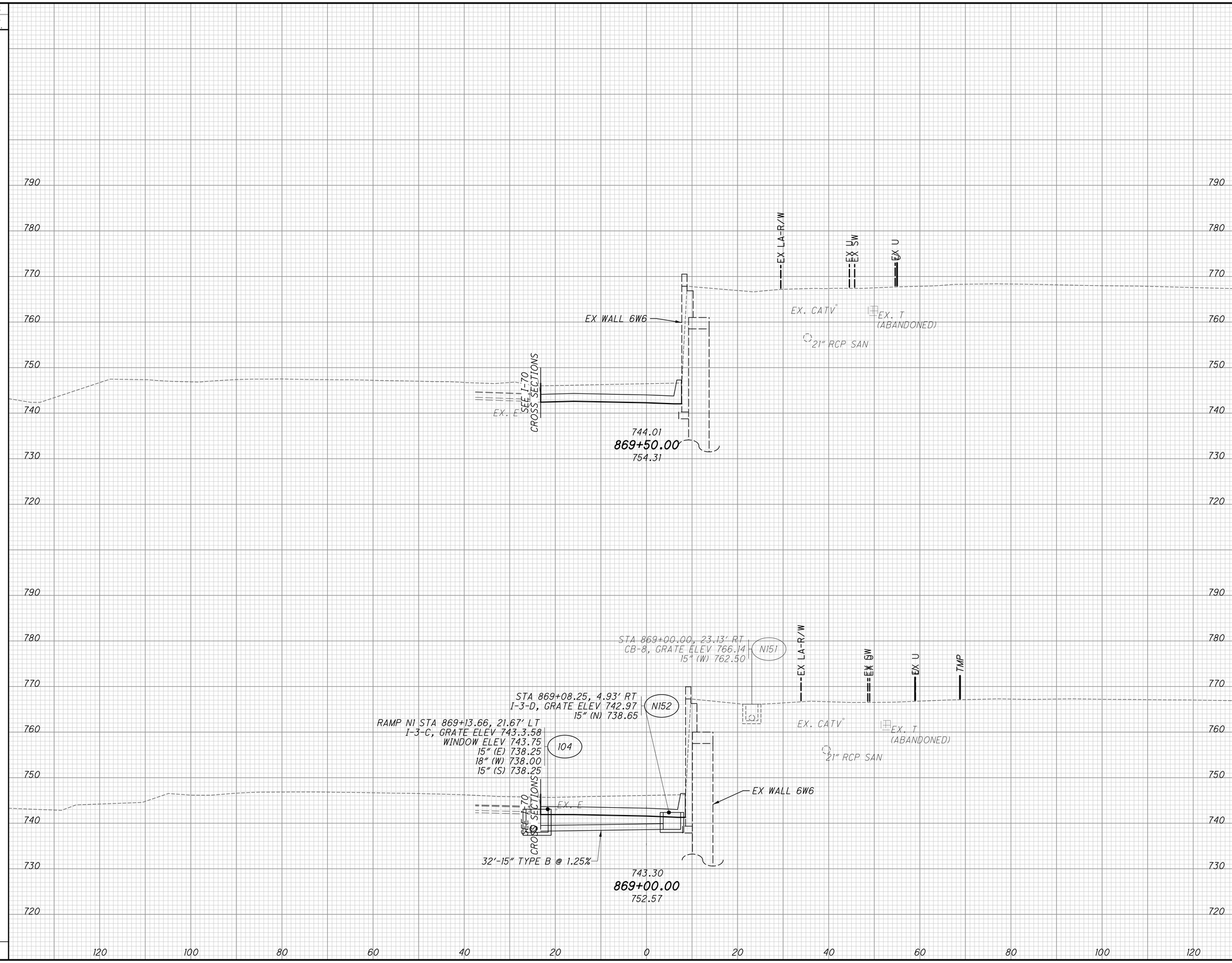

SEEDING END WIDTH	SEEDING SQ. YDS.	END AREA CUT	END AREA FILL	VOLUME CUT	VOLUME FILL
0		121	0		
	0			238	0
0		135	0		
	0			290	0
	0			528	0

CALCULATED MAH
CHECKED BSB

CROSS SECTIONS RAMP N1
STA. 869+00.00 TO STA. 869+50.00

FRA-70-14.54

888
2317

ms consultants, inc.

PLOT.CEL

ms consultants, inc.
msconsultants.com

Ohio DOT Workspace
70\71 East Interchange 2E
www.msconsultants.com

Batchplot Spec: \\msconsultants.com\files\production\03\60\06634_2E\standards\plotdrv\batchplt.spc
Pen Table: \\msconsultants.com\files\Standards\ustn\ohdot\V8i\ms\plotting\pen\V8i_ms_std.tbl
Plot Driver: \\msconsultants.com\files\Standards\ustn\ohdot\v8i\ms\plotting\PDF.pltcfg

34" x 22"

View: FENCE_VIEW1
By: jdouglas
Model: Sheet
Printed: 6/19/2018 @ 8:56:10 AM
File: N:\03\60\06634_2E\roadway\sheets\105322XS1340.dgn

SEEDING END WIDTH	SEEDING SQ. YDS.	END AREA CUT	END AREA FILL	VOLUME CUT	VOLUME FILL
0		113	0		
	0			195	0
0		98	0		
	0			203	0
	0			398	0

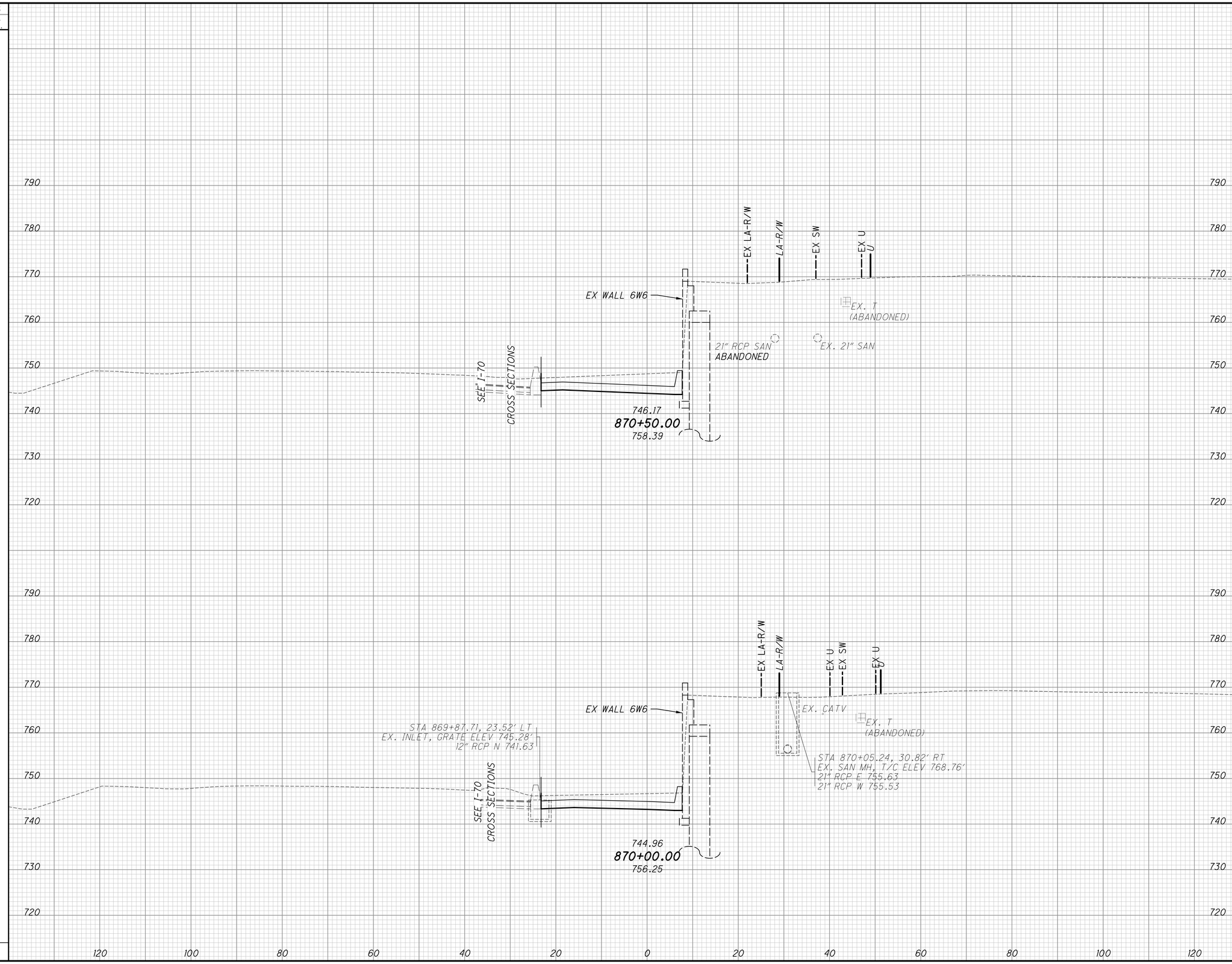

CALCULATED MAH
CHECKED BSB

CROSS SECTIONS RAMP N1
STA. 870+00.00 TO STA. 870+50.00

FRA-70-14.54

889
2317

ms consultants, inc.

PLOT.CEL

ms consultants, inc.
msconsultants.com

www.msconsultants.com

Ohio DOT Workspace
70\71 East Interchange 2E

0 0.5" 1"

Batchplot Spec: \\msconsultants.com\files\production\03\60\06634.2E\standards\plotdrv\batchplt.spc
Pen Table: \\msconsultants.com\files\Standards\usth\ohdot\V8i\ms\plotting\pen\V8i_ms_std.tbl PCF: ohdotV8i
Plot Driver: \\msconsultants.com\files\Standards\usth\ohdot\V8i\ms\plotting\PDF.pltcfg PCF: 60-06634_2E_Columbus

Model: Sheet View: FENCE_VIEW1
Printed: 6/19/2018 @ 8:56:11 AM By: jdouglas
File: N:\03\60\06634_2E\roadway\sheets\0532243134.dgn

34" x 22"

SEEDING	
END WIDTH	SQ. YDS.
5	
19	
2	
6	
25	

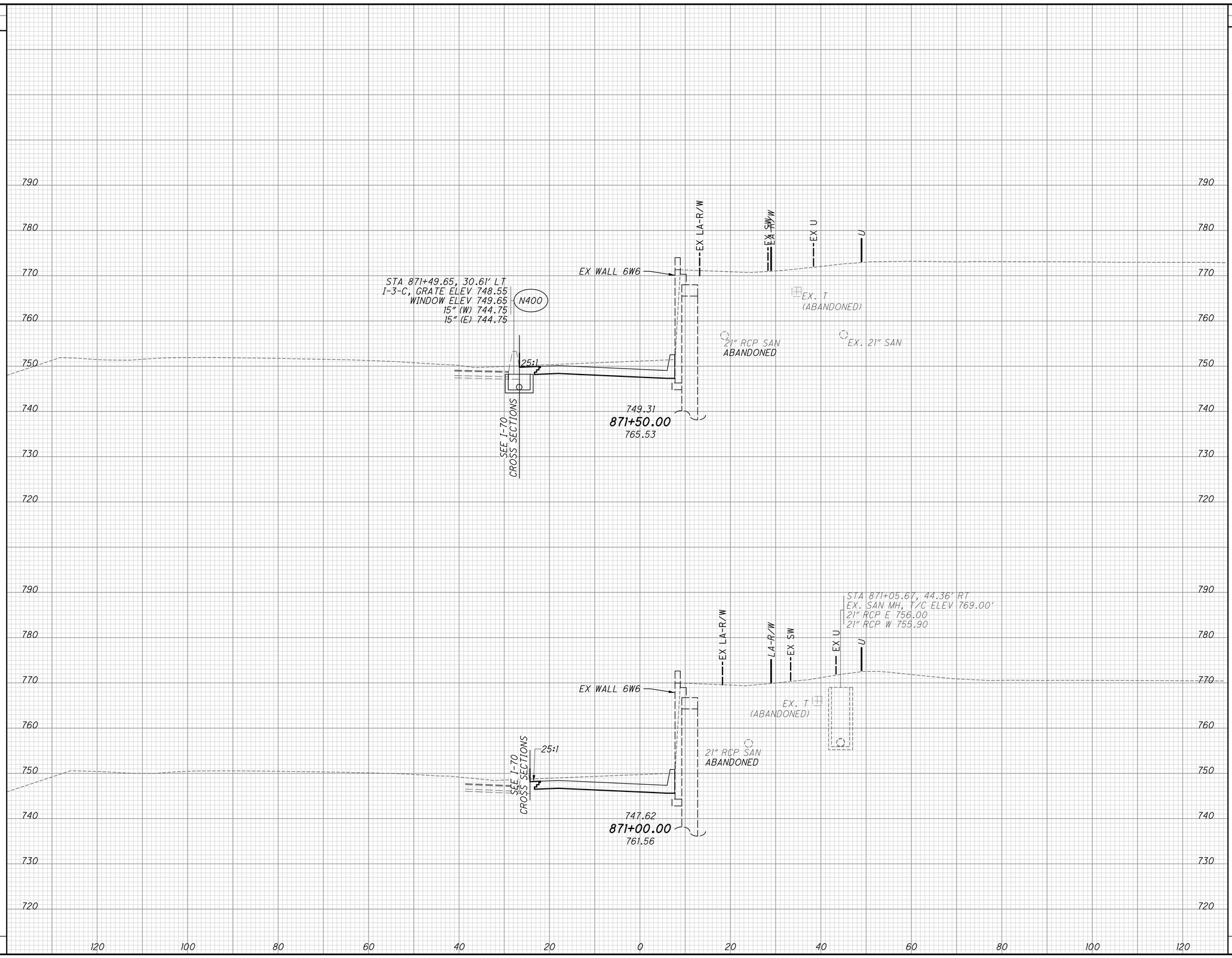

END AREA		VOLUME	
CUT	FILL	CUT	FILL
92	1		
178	2		
100	1		
198	1		
376	3		

CALCULATED MAH
CHECKED BSB

CROSS SECTIONS RAMP N1
STA. 871+00.00 TO STA. 871+50.00

FRA-70-14.54

890
2317

PLOT.CEL

ms consultants, inc.
msconsultants.com

www.msconsultants.com

Ohio DOT Workspace
70\71 East Interchange 2E

1" 0.5" 0

Batchplot Spec: \\msconsultants.com\files\production\03\60\06634_2E\standards\plotdrv\batchplt.spc
Pen Table: \\msconsultants.com\files\Standards\usth\ohdot\V8i\ms\plotting\pen\V8i_ms_std.tbl
Plot Driver: \\msconsultants.com\files\Standards\usth\ohdot\v8i\ms\plotting\PDF.pltcfg

PDF: ohdotV8i
DGN: 60-06634_2E_Columbus

34" x 22"

View: FENCE_VIEW1
By: jdouglas

Model: Sheet
Printed: 6/19/2018 @ 8:56:17 AM
File: N:\03\60\06634_2E\roadway\sheets\105222X5134-2.dgn

SEEDING	
END WIDTH	SQ. YDS.
14	
8	
61	
36	
97	

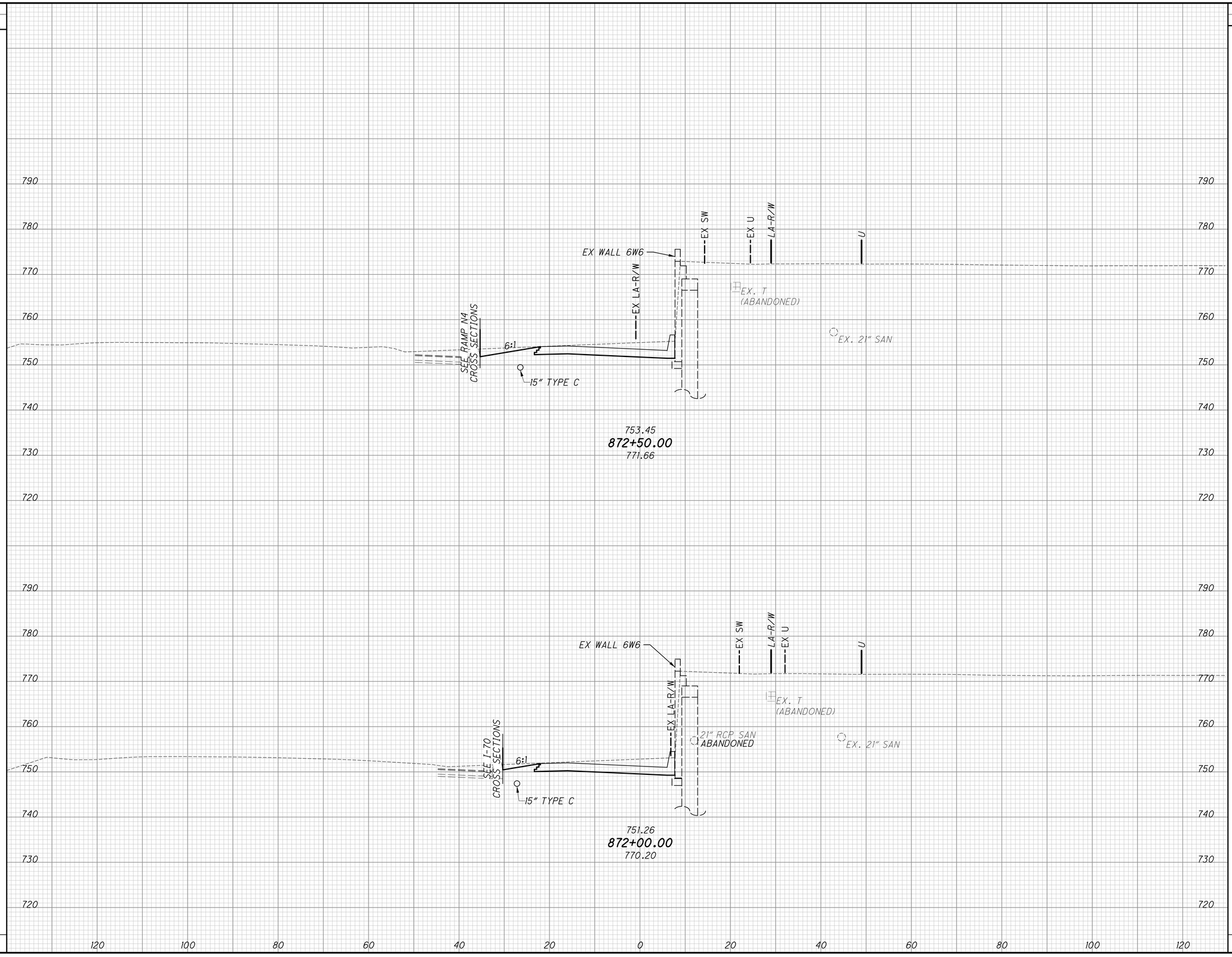

END AREA		VOLUME	
CUT	FILL	CUT	FILL
92	1		
88	1		
		167	2
		167	2
		334	4

CALCULATED	CHECKED
MAH	BSB

CROSS SECTIONS RAMP N1
STA. 872+00.00 TO STA. 872+50.00

FRA-70-14.54

891
2317

ms consultants, inc.

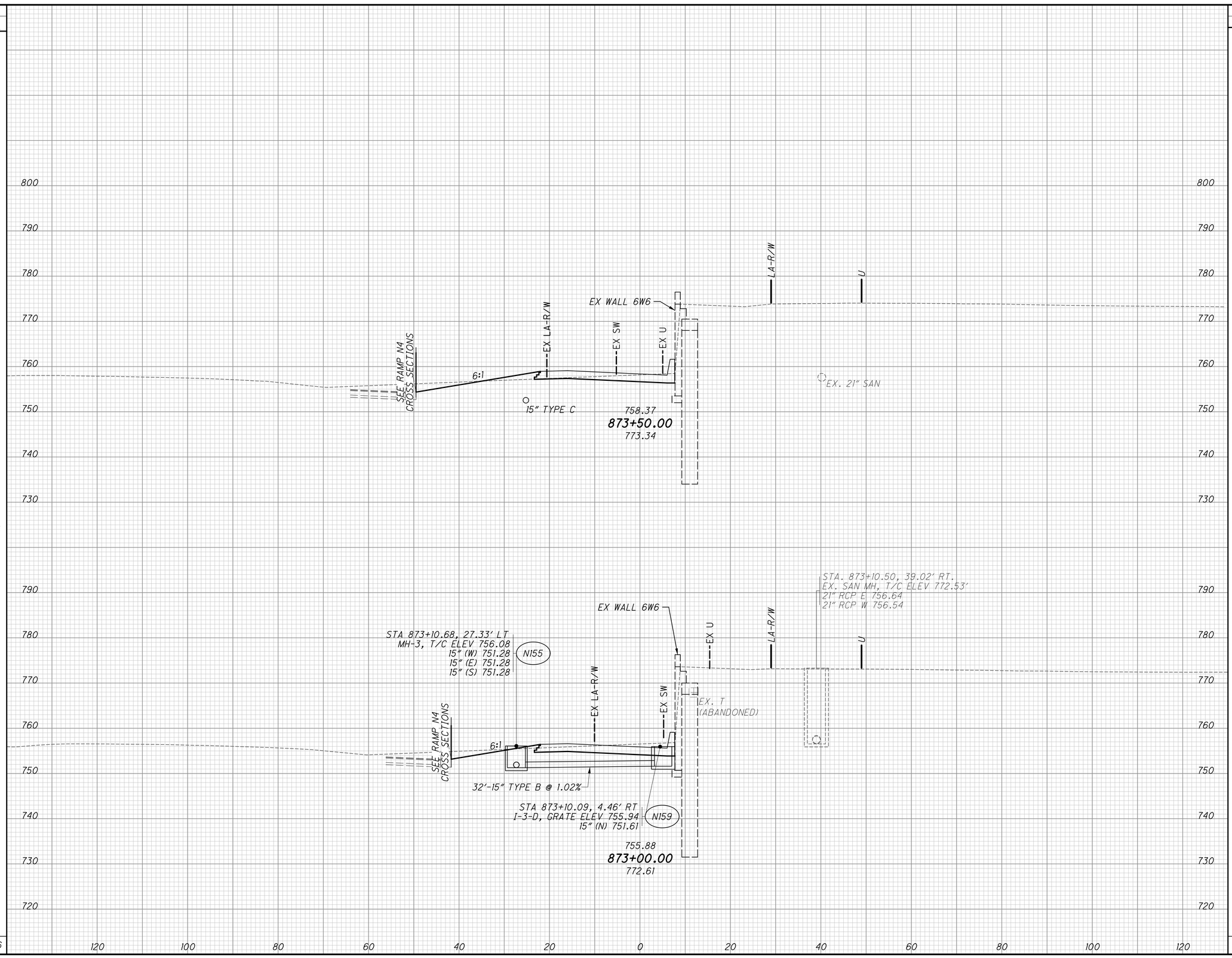

SEEDING END WIDTH	SEEDING SQ. YDS.	END AREA CUT	END AREA FILL	VOLUME CUT	VOLUME FILL
28		42	10		
	133			100	11
20		66	3		
	93			146	3
	226			246	14

CALCULATED MAH
CHECKED BSB

CROSS SECTIONS RAMP N1
STA. 873+00.00 TO STA. 873+50.00

FRA-70-14.54

892
2317

ms consultants, inc.

PLOT.CEL

ms consultants, inc.
msconsultants.com

Ohio DOT Workspace
70\71 East Interchange 2E
www.msconsultants.com

Batchplot Spec: \\msconsultants.com\files\production\03\60\06634_2E\standards\plotdrv\batchplt.spc
Pen Table: \\msconsultants.com\files\Standards\ustn\ohdot\V8i\ms\plotting\pen\V8i_ms_std.tbl
Plot Driver: \\msconsultants.com\files\Standards\ustn\ohdot\v8i\ms\plotting\PDF.pltcfg

34" x 22"

View: FENCE_VIEW1
By: jdouglas
Model: Sheet
Printed: 6/19/2018 @ 8:56:19 AM
File: N:\03\60\06634_2E\roadway\sheets\105322XS1343.dgn

PLOT.CEL

ms consultants, inc.
msconsultants.com

SEEDING	
END WIDTH	SQ. YDS.
48	
	215
48	
	91
37	
	127
37	
	181
	614

STA 874+90.21
END FRA-70-1461P

STA 874+73.57, 23.10' LT
MH-3, T/C ELEV 764.37
15" (W) 758.15
15" (E) 758.15
15" (N) 758.15
N160

STA 874+74.95, 37.94' LT
CB-8, GRATE ELEV 762.30
15" (S) 758.22
N158

EX WALL 6W6
LA-R/W
U
EX LA-R/W
EX SW
EX U
SEE RAMP N4 CROSS SECTIONS
5:1
25:1
15'-15" TYPE C @ 0.47%
21" RCP SAN (TBR)
FRA-70-1461P FOUNDATION
763.37
874+50.00
774.61
EX. 21" SAN

STA 874+30.75
BEGIN FRA-70-1461P

EX WALL 6W6
LA-R/W
U
EX LA-R/W
EX SW
EX U
SEE RAMP N4 CROSS SECTIONS
6.2:1
21" RCP SAN
15" TYPE C
760.87
874+00.00
774.22
EX. 21" SAN

LIMITS OF ITEM 203 AND 503 EARTHWORK

SEE CROSS SECTION CALCULATION DETAILS SHEET 751 FOR WALL & PIER EARTHWORK QUANTITIES

SEE EMBANKMENT CONSTRUCTION NOTE ON SHEET 80 FOR EARTHWORK WITHIN 100 FT OF BRIDGE ABUTMENT

800 790 780 770 760 750 740 730

120 100 80 60 40 20 0 20 40 60 80 100 120

END AREA		VOLUME		
CUT	FILL	CUT	FILL	
147	104			AH
109	0			BK
		162	0	
109	0			
		48	0	
109	0			AH
39	18			BK
		44	21	
39	18			
		75	26	
		329	47	

CALCULATED MAH
CHECKED BSB

CROSS SECTIONS RAMP N1
STA. 874+00.00 TO STA. 874+90.21

FRA-70-14.54

893
2317

ms consultants, inc.

Batchplot Spec: \\msconsultants.com\Files\Production\03\60\06634.2E\standards\dotdr\batchplt.SPC
Pen Table: \\msconsultants.com\Files\Standards\usth\ohdot\V8i\ms\plotting\pen\V8i_ms_std.TBL
Plot Driver: \\msconsultants.com\Files\Standards\usth\ohdot\v8i\ms\plotting\PDF.pltcfg

Model: Sheet
Printed: 1/11/2019 @ 1:55:20 PM
File: \\msconsultants.com\Files\Production\03\60\06634.2E\roadway\sheets\105327XS1344.dgn
View: SHEET
By: dhall

34" x 22"

Ohio DOT Workspace
70\71 East Interchange 2E
PDF: ohdot\V8i
PDF: 60-06634_2E_Columbus

www.msconsultants.com

PLOT.CEL

ms consultants, inc.
msconsultants.com

Ohio DOT Workspace
70\71 East Interchange 2E
www.msconsultants.com

1"
0.5"
0

Batchplot Spec: \\msconsultants.com\files\production\03\60\06634_2E\standards\oladr\batchplt.SPC
Pen Table: \\msconsultants.com\files\Standards\usth\ohdot\V8i\ms\plotting\pen\V8i_ms_std.tbl
Plot Driver: \\msconsultants.com\files\Standards\usth\ohdot\V8i\ms\plotting\PDF.pltcfg
DGN: ohdotV8i
DGN: 60-06634_2E_Columbus

34" x 22"

View: SHEET
By: dhall

Model: Sheet @ 5:15:16 PM
Printed: 1/11/2019
File: \\msconsultants.com\files\Production\03\60\06634_2E\roadway\sheets\105327XS1345.dgn

SEEDING END WIDTH	SEEDING SQ. YDS.
10	71
16	118
27	41
	230

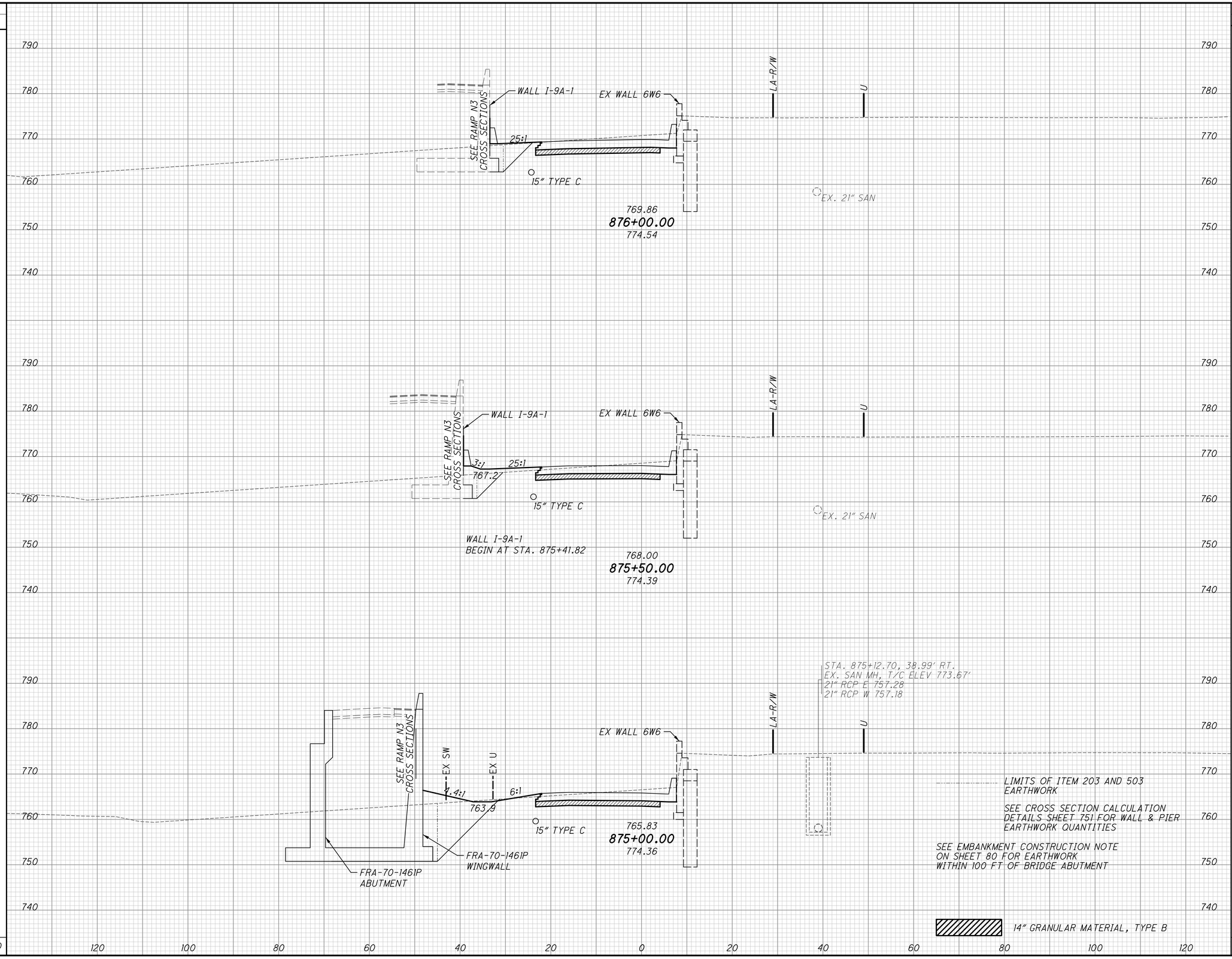

END AREA CUT	END AREA FILL	VOLUME CUT	VOLUME FILL
90	23		
72	33		
147	104	150	51
		204	127
		53	38
		407	216

CALCULATED MAH
CHECKED BSB

CROSS SECTIONS RAMP N1
STA. 875+00.00 TO STA. 876+00.00

FRA-70-14.54

894
2317

ms consultants, inc.

PLOT.CEL

ms consultants, inc.
msconsultants.com

Ohio DOT Workspace
70\71 East Interchange 2E
www.msconsultants.com

1" 0.5" 0

Batchplot Spec: \\vnsconsultants.com\files\production\03\60\06634.2E\standards\oladr\batchplt.SPC
Pen Table: \\vnsconsultants.com\files\Standards\usth\ohdot\V8i\ms\plotting\pen\V8i_ms_std.TBL
Plot Driver: \\vnsconsultants.com\files\Standards\usth\ohdot\v8i\ms\plotting\PDF.pltcfg
PDF: ohdotV8i
DGN: 60-06634_2E_Columbus

Model: Sheet
Printed: 1/11/2019 @ 1:18:58 PM
File: \\vnsconsultants.com\files\Production\03\60\06634.2E\roadway\sheets\105322XS1346.dgn
34" x 22"
View: SHEET
By: dhall

SEEDING	
END WIDTH	SQ. YDS.
27	151
27	96
7	47
	294

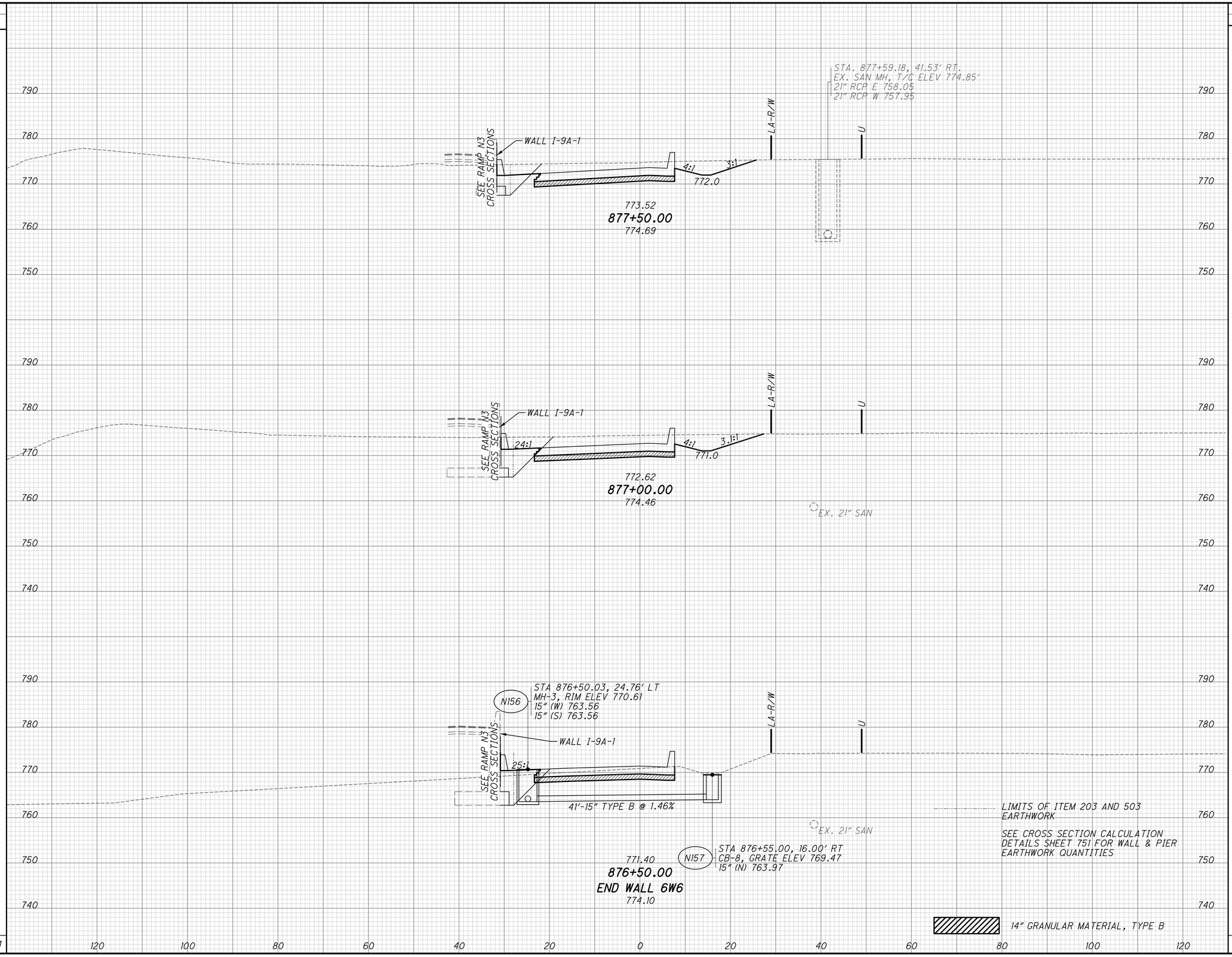

END AREA		VOLUME	
CUT	FILL	CUT	FILL
161	12		
		328	29
193	20		
		227	46
52	30		
		131	48
		686	123

CALCULATED MAH
CHECKED BSB

CROSS SECTIONS RAMP N1
STA. 876+50.00 TO STA. 877+50.00

FRA-70-14.54

895
2317

ms consultants, inc.

PLOT.CEL

ms consultants, inc.
msconsultants.com

www.msconsultants.com

Ohio DOT Workspace
70\71 East Interchange 2E

1" 0.5" 0

Batchplot Spec: \\msconsultants.com\files\production\03\60\06634_2E\standards\plotdrv\batchplt.spc
Pen Table: \\msconsultants.com\files\Standards\usth\ohdot\V8i\ms\plotting\pen\V8i_ms_std.tbl PCF: ohdotV8i
Plot Driver: \\msconsultants.com\files\Standards\usth\ohdot\v8i\ms\plotting\PDF.pltcfg PCF: 60-06634_2E_Columbus

Model: Sheet View: FENCE_VIEW1
Printed: 6/19/2018 @ 8:56:24 AM By: jdouglas
File: N:\03\60\06634_2E\roadway\sheets\D5322XS347.dgn

34" x 22"

SEEDING END WIDTH	SEEDING SQ. YDS.
	26
	129
	20
	61
	24
	66
	24
	140
	389

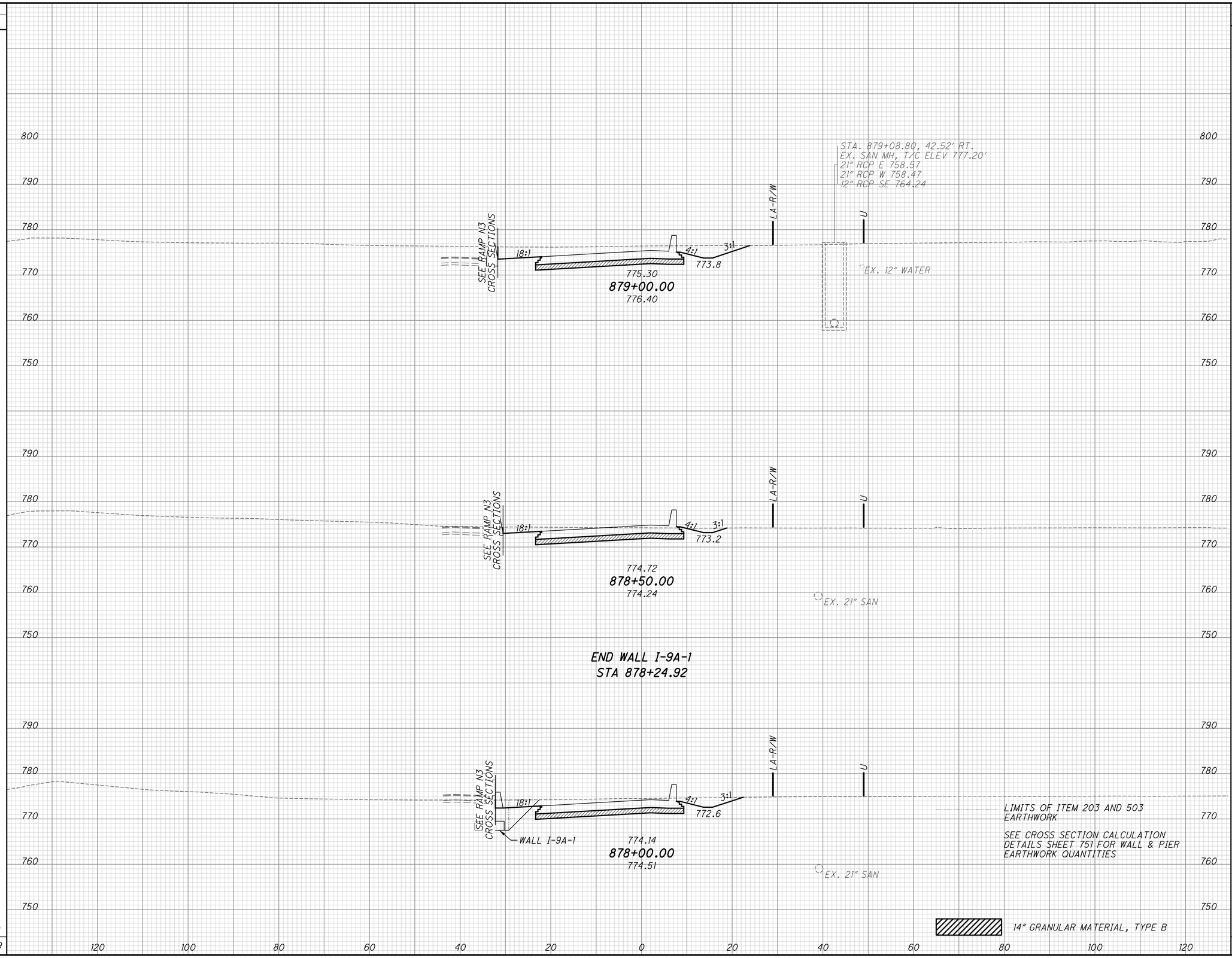

END AREA CUT	END AREA FILL	VOLUME CUT	VOLUME FILL
151	2	206	4
72	2	66	2
72	2	AH	
121	15	BK	
121	15	112	14
		262	25
		646	45

CALCULATED MAH
CHECKED BSB

CROSS SECTIONS RAMP N1
STA. 878+00.00 TO STA. 879+00.00

FRA-70-14.54

896
2317

PLOT.CEL

ms consultants, inc.
msconsultants.com

www.msconsultants.com

Ohio DOT Workspace
70\71 East Interchange 2E

1" 0 0.5"

Batchplot Spec: \\msconsultants.com\files\production\03\60\06634_2E\standards\oladv\batchplt.spc
Pen Table: \\msconsultants.com\files\Standards\usth\ohdot\V8i\ms\plotting\pen\V8i_ms_std.tbl PCF: ohdot\V8i
Plot Driver: \\msconsultants.com\files\Standards\usth\ohdot\v8i\ms\plotting\PDF.pltcfg PCF: 60-06634_2E_Columbus

Model: Sheet View: FENCE_VIEW1
Printed: 6/19/2018 @ 8:56:26 AM By: jdouglas
File: N:\03\60\06634_2E\roadway\sheets\1053229_3348.dgn

34" x 22"

SEEDING	
END WIDTH	SQ. YDS.
23	131
24	148
29	154
	433

RAMP N3 STA 880+05.00, 11.40' RT
I-3-C, APP, GRATE ELEV 773.70
15" (W) 767.90
15" (E) 767.90
N112
SEE RAMP N3 CROSS SECTIONS
18:1
4:1
3:1
775.5
777.04
880+50.00
777.82
LA-R/W
U
EX. 21" SAN IN 36" STEEL CASING

STA 879+91.65, 40.47' RT
EX. CB, GRATE ELEV 776.10' (DND)
SEE RAMP N3 CROSS SECTIONS
18:1
4:1
3:1
774.9
776.46
880+00.00
777.54
LA-R/W
U
EX. 21" SAN IN 36" STEEL CASING

STA 879+44.58, 30.60' LT
EX. SAN MH, T/C ELEV 778.46'(TBR)
8" VCP NE 766.82
8" VCP SW 766.83
STA 879+35.00, 11.45' RT
I-3-C, APP, GRATE ELEV 773.33
15" (N) 767.18
15" (E) 767.18
N110
SEE RAMP N3 CROSS SECTIONS
EX GEN
18:1
4:1
3:1
774.3
LA-R/W
U
EX. 12" WATER
8" VCP
8" VCP
TBR
775.88
879+50.00
778.17
EX. 21" SAN IN 36" STEEL CASING

14" GRANULAR MATERIAL, TYPE B

END AREA		VOLUME	
CUT	FILL	CUT	FILL
144	2		
		281	4
160	2		
		357	4
226	2		
		349	4
		987	12

CALCULATED MAH
CHECKED BSB

CROSS SECTIONS RAMP N1
STA. 879+50.00 TO STA. 880+50.00

FRA-70-14.54

897
2317

ms consultants, inc.

PLOT.CEL

ms consultants, inc.
msconsultants.com

www.msconsultants.com

Ohio DOT Workspace
70\71 East Interchange 2E

1" 0.5" 0

Batchplot Spec: \\msconsultants.com\files\production\03\60\06634_2E\standards\plotdrv\batchplt.spc
Pen Table: \\msconsultants.com\files\Standards\usitn\ohdot\V8i\ms\plotting\pen\V8i_ms_std.tbl
Plot Driver: \\msconsultants.com\files\Standards\usitn\ohdot\v8i\ms\plotting\PDF.pltcfg

PCF: ohdotV8i
PCF: 60-06634_2E_Columbus

34" x 22"

View: FENCE_VIEW1
By: jdouglas

Model: Sheet
Printed: 6/19/2018 @ 8:56:27 AM
File: N:\03\60\06634_2E\roadway\sheets\D0522XS1349.dgn

SEEDING	
END WIDTH	SQ. YDS.
26	148
27	147
26	135
	430

RAMP N3 STA 881+59.24, 9.82' RT
I-3-C, APP, GRATE ELEV 776.82
15" (W) 771.02
N106

SEE RAMP N3 CROSS SECTIONS

25:1
4:1
3:1
LA-R/W
U
777.1
778.78
882+00.00
780.03

EX. 21" SAN IN 36" STEEL CASING

SEE RAMP N3 CROSS SECTIONS
22.5:1
4:1
3:1
LA-R/W
U
776.6
778.20
881+50.00
779.45

EX. 21" SAN IN 36" STEEL CASING

SEE RAMP N3 CROSS SECTIONS
17.3:1
4:1
3.9:1
LA-R/W
U
776.1
777.62
881+00.00
778.32

EX. 21" SAN IN 36" STEEL CASING

14" GRANULAR MATERIAL, TYPE B

800 790 780 770 760 750

120 100 80 60 40 20 0 20 40 60 80 100 120

END AREA		VOLUME	
CUT	FILL	CUT	FILL
172	1	310	2
163	1	285	3
145	2	267	4
		862	9

CALCULATED MAH
CHECKED BSB

CROSS SECTIONS RAMP N1
STA. 881+00.00 TO STA. 882+00.00

FRA-70-14.54

898
2317

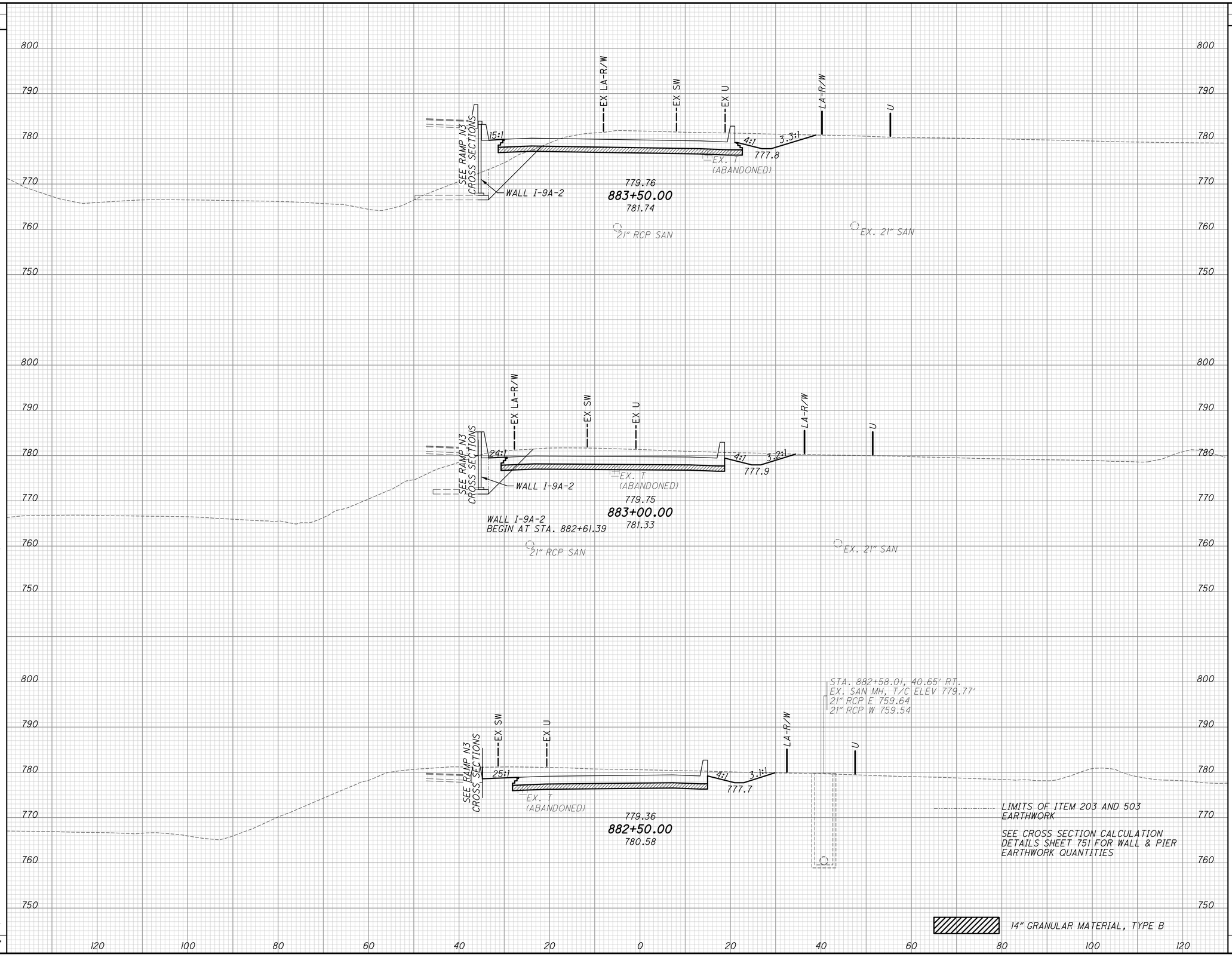

SEEDING END WIDTH	SEEDING SQ. YDS.	END AREA CUT	END AREA FILL	VOLUME CUT	VOLUME FILL
22		206	65		
	118			385	76
20		210	18		
	122			359	18
23		178	1		
	137			324	2
	377			1068	96

CALCULATED MAH
CHECKED BSB

CROSS SECTIONS RAMP N1
STA. 882+50.00 TO STA. 883+50.00

FRA-70-14.54

899
2317

ms consultants, inc.

PLOT.CEL

ms consultants, inc.
msconsultants.com

Ohio DOT Workspace
70\71 East Interchange 2E
www.msconsultants.com

Batchplot Spec: \\msconsultants.com\files\production\03\60\06634_2E\standards\plotdrv\batchplt.spc
Pen Table: \\msconsultants.com\files\Standards\ustn\ohdot\V8i\ms\plotting\pen\V8i_ms_std.tbl
Plot Driver: \\msconsultants.com\files\Standards\ustn\ohdot\v8i\ms\plotting\PDF.pltcfg

34" x 22"

View: FENCE_VIEW1
By: jdouglas
Model: Sheet
Printed: 6/19/2018 @ 8:56:28 AM
File: N:\03\60\06634_2E\roadway\sheets\105322XS1350.dgn

PLOT.CEL

ms consultants, inc.
msconsultants.com

Ohio DOT Workspace
70\71 East Interchange 2E

www.msconsultants.com

0 1" 0.5"

Batchplot Spec: \\msconsultants.com\files\production\03\60\06634_2E\standards\plotdrv\batchplt.spc
Pen Table: \\msconsultants.com\files\Standards\ustn\ohdot\V8\ms\plotting\pen\V8i_ms_std.tbl PDF: ohdotV8i
Plot Driver: \\msconsultants.com\files\Standards\ustn\ohdot\v8i\ms\plotting\PDF.pltcfg PDF: 60-06634_2E_Columbus

Model: Sheet
Printed: 6/19/2018 @ 8:56:30 AM View: FENCE_VIEW1
File: N:\03\60\06634_2E\roadway\sheets\1053223X1351.dgn By: jdougos

34" x 22"

SEEDING	
END WIDTH	SQ. YDS.
29	
149	
24	
128	
277	

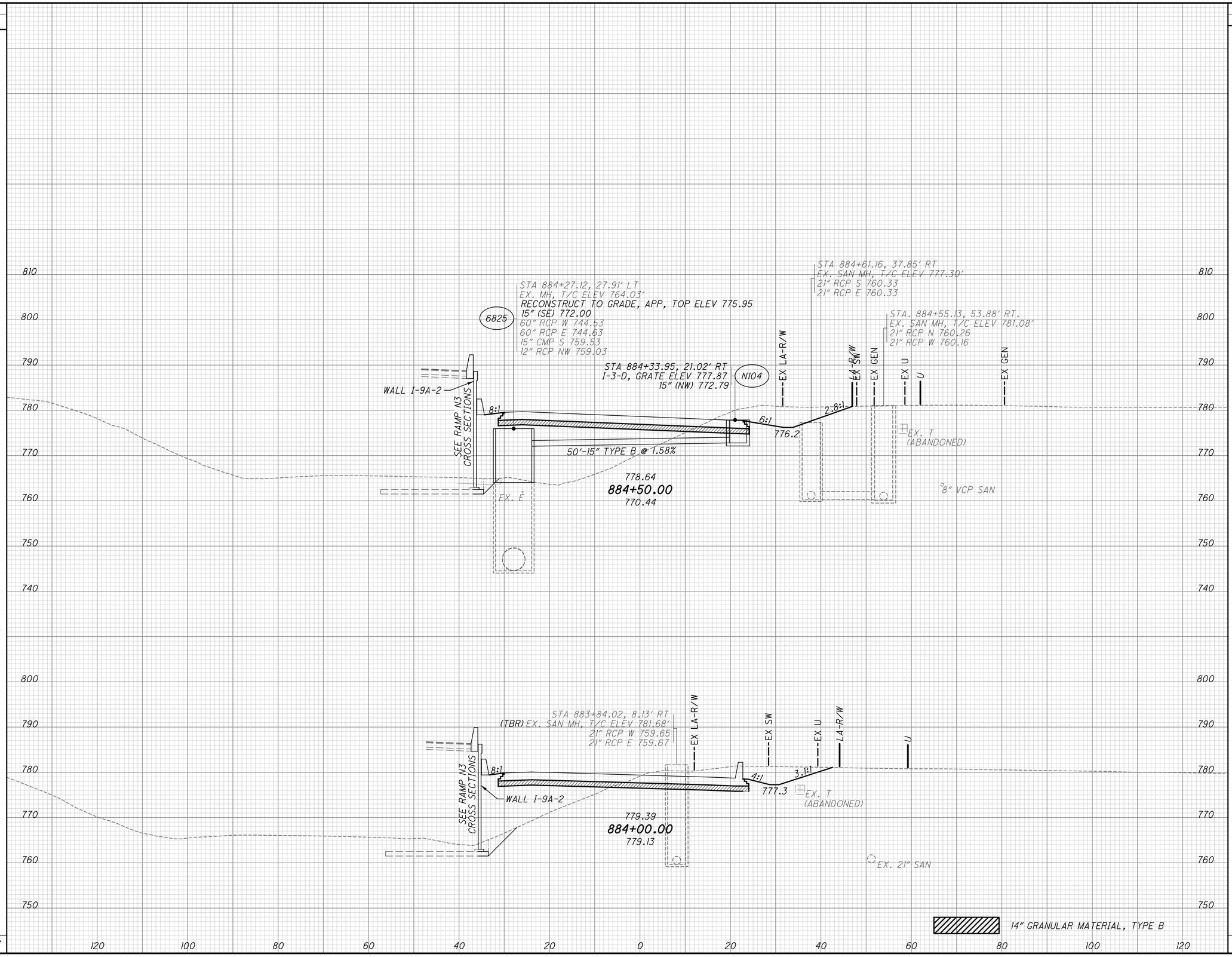

END AREA		VOLUME	
CUT	FILL	CUT	FILL
106	441		
222	592		
134	199		
315	244		
537	836		

CALCULATED MAH
CHECKED BSB

CROSS SECTIONS RAMP N1
STA. 884+00.00 TO STA. 884+50.00

FRA-70-14.54

900
2317

ms consultants, inc.

PLOT.CEL

ms consultants, inc.
msconsultants.com

www.msconsultants.com

Ohio DOT Workspace
70\71 East Interchange 2E

1" 0.5" 0

PCF: ohdot\V8i
PCF: 60-06634_2E_Columbus

Batchplot Spec: \\msconsultants.com\files\production\Q3\60\06634_2E\standards\plotdir\batchplt.spc
Pen Table: \\msconsultants.com\files\Standards\usth\ohdot\V8i\ms\plotting\pen\V8i_ms_std.tbl
Plot Driver: \\msconsultants.com\files\Standards\usth\ohdot\v8i\ms\plotting\PDF.pltcfg

Model: Sheet
Printed: 6/19/2018 @ 8:56:31 AM
File: N:\03\60\06634_2E\roadway\sheets\105222X5352.dgn

View: FENCE_VIEW1
By: jdouglas

34" x 22"

SEEDING	
END WIDTH	SQ. YDS.
49	228
33	173
	401

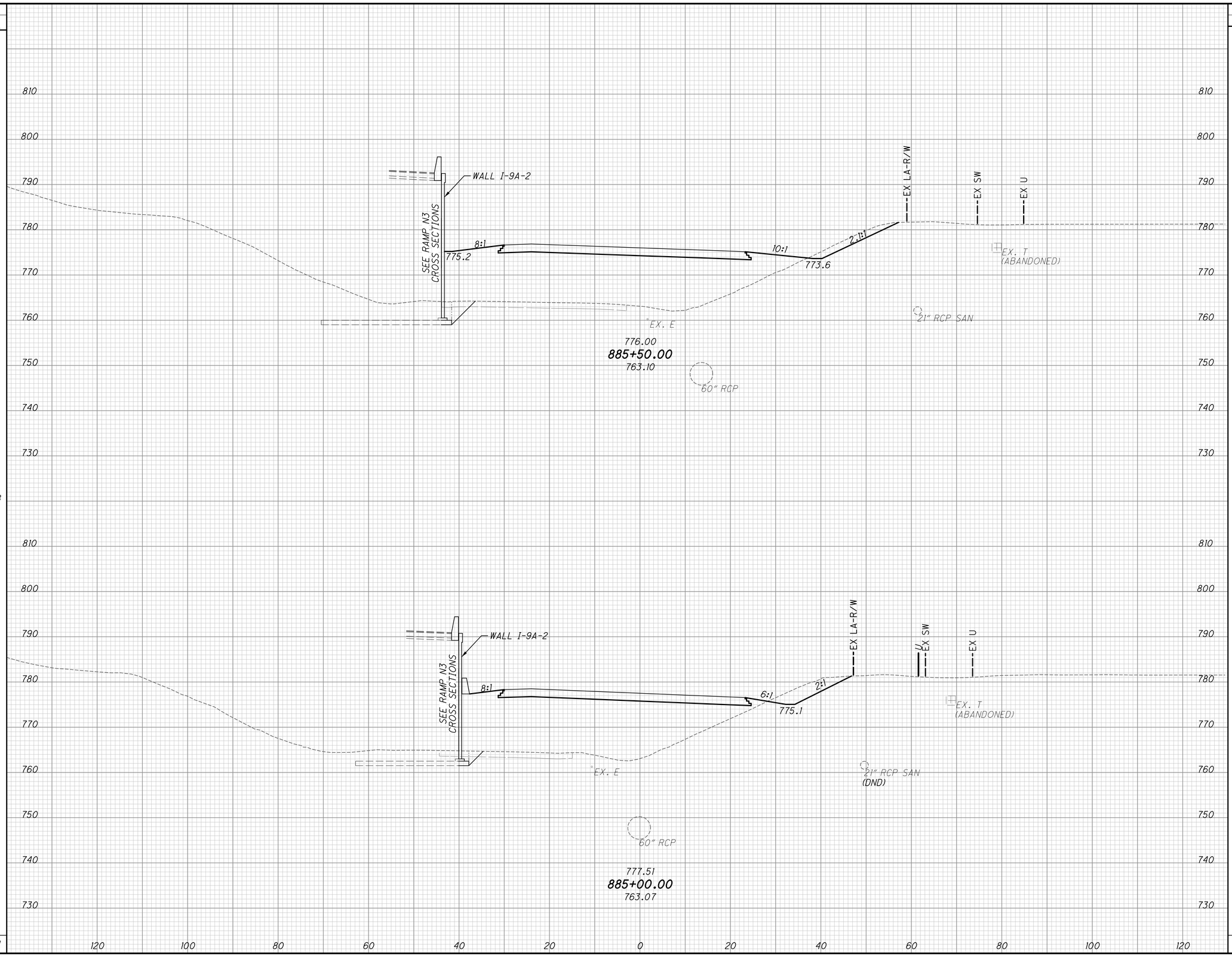

END AREA		VOLUME	
CUT	FILL	CUT	FILL
79	826		
69	699		
		136	1412
		160	1055
		296	2467

CALCULATED MAH
CHECKED BSB

CROSS SECTIONS RAMP N1
STA. 885+00.00 TO STA. 885+50.00

FRA-70-14.54

901
2317

ms consultants, inc.

PLOT.CEL

ms consultants, inc.
msconsultants.com

Ohio DOT Workspace
70\71 East Interchange 2E
www.msconsultants.com

Batchplot Spec: \\msconsultants.com\files\production\03\60\06634_2E\standards\plotdrv\batchplt.spc
Pen Table: \\msconsultants.com\files\Standards\ustn\ohdot\V8i\ms\plotting\pen\V8i_ms_std.tbl
Plot Driver: \\msconsultants.com\files\Standards\ustn\ohdot\v8i\ms\plotting\PDF.pltcfg

34" x 22"

Model: Sheet
Printed: 6/19/2018 @ 8:56:32 AM
File: N:\03\60\06634_2E\roadway\sheets\105322XS1353.dgn
View: FENCE_VIEW1
By: jdouglas

SEEDING END WIDTH	SEEDING SQ. YDS.	END AREA CUT	END AREA FILL	VOLUME CUT	VOLUME FILL
71		67	901		
	372			145	1628
63		90	857		
	312			156	1559
	684			301	3187

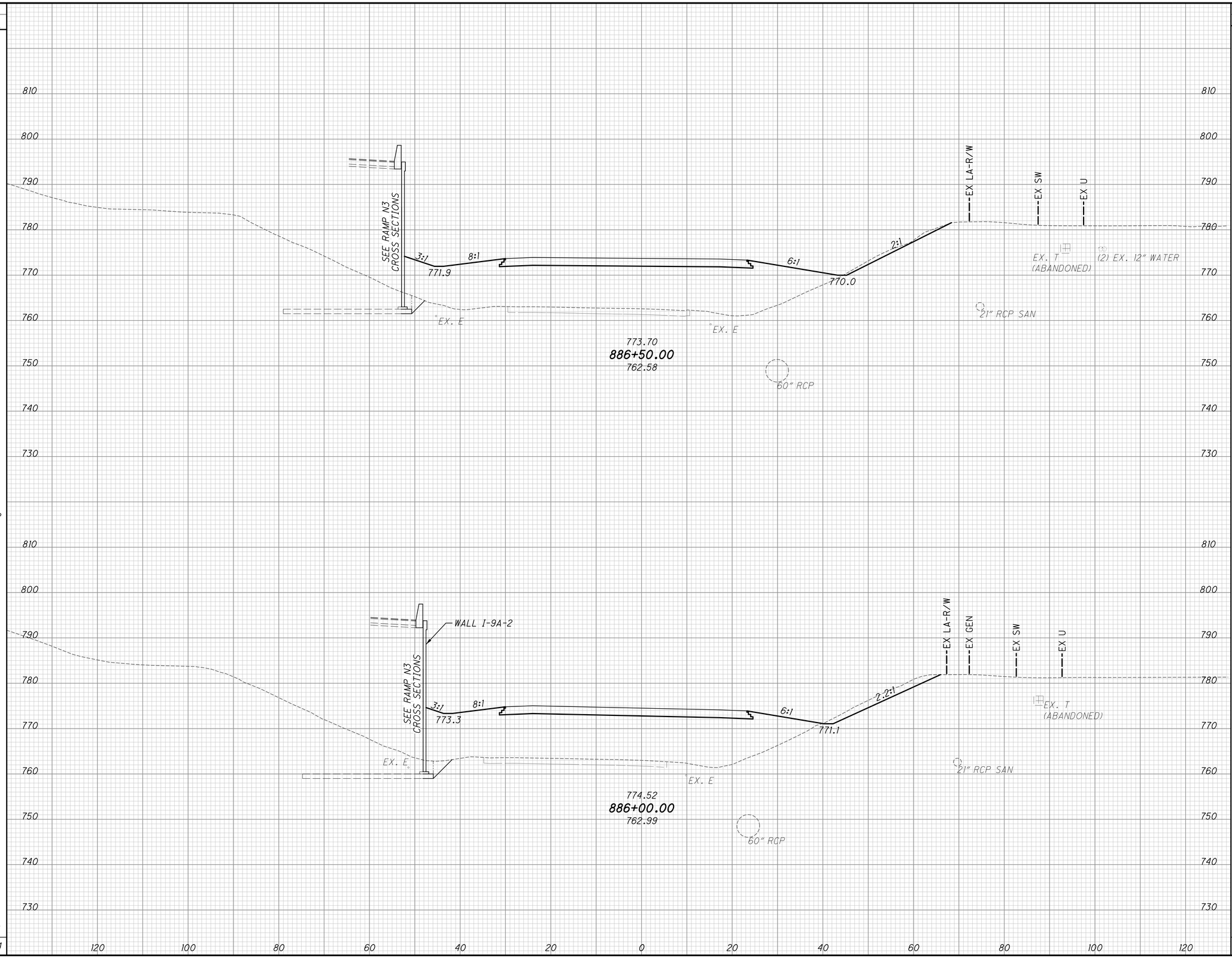

CALCULATED MAH
CHECKED BSB

CROSS SECTIONS RAMP N1
STA. 886+00.00 TO STA. 886+50.00

FRA-70-14.54

902
2317

ms consultants, inc.

PLOT.CEL

ms consultants, inc.
msconsultants.com

www.msconsultants.com

Ohio DOT Workspace
70\71 East Interchange 2E

0 0.5" 1"

34" x 22"

Batchplot Spec: \\msconsultants.com\files\production\Q3\60\06634_2E\standards\plotdrv\batchplt.spc
Pen Table: \\msconsultants.com\files\Standards\usth\ohdot\V8i\ms\plotting\pen\V8i_ms_std.tbl PCF: ohdotV8i
Plot Driver: \\msconsultants.com\files\Standards\usth\ohdot\v8i\ms\plotting\PDF.pltcfg PCF: 60-06634_2E_Columbus

Model: Sheet View: FENCE_VIEW1
Printed: 6/19/2018 @ 8:56:33 AM By: jdouglas
File: N:\03\60\06634_2E\roadway\sheets\1053224S1354.dgn

SEEDING	
END WIDTH	SQ. YDS.
78	
414	
414	

END AREA	
CUT	FILL

VOLUME	
CUT	FILL
52	965
110	1728
110	1728

CALCULATED MAH
CHECKED BSB

CROSS SECTIONS RAMP N1
STA. 887+00.00

FRA-70-14.54

903
2317

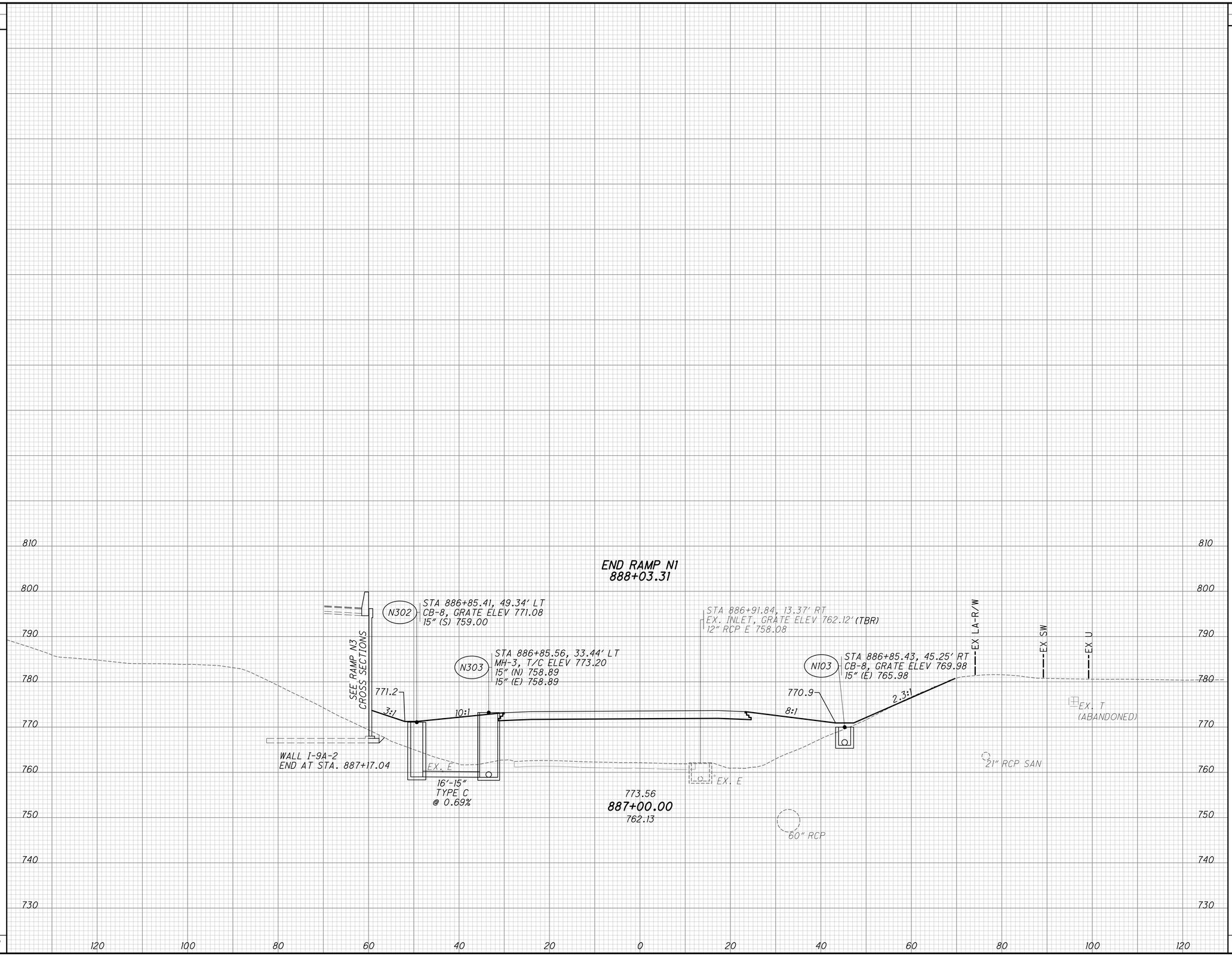

PLOT.CEL

ms consultants, inc.
msconsultants.com

Ohio DOT Workspace
70\71 East Interchange 2E

www.msconsultants.com

1" 0.5" 0

Batchplot Spec: \\msconsultants.com\files\production\03\60\06634_2E\standards\plotdrv\batchplt.spc
Pen Table: \\msconsultants.com\files\Standards\usitn\ohdot\V8i\ms\plotting\pen\V8i_ms_std.tbl
Plot Driver: \\msconsultants.com\files\Standards\usitn\ohdot\v8i\ms\plotting\PDF.pltcfg

PDF: ohdotV8i
PDF: 60-06634_2E_Columbus

34" x 22"

Model: Sheet
Printed: 6/19/2018 @ 8:56:35 AM
File: N:\03\60\06634_2E\roadway\sheets\105322KS361.dgn

View: FENCE_VIEW1
By: jdouglas

SEEDING	
END WIDTH	SQ. YDS.
39	205
35	0
	205

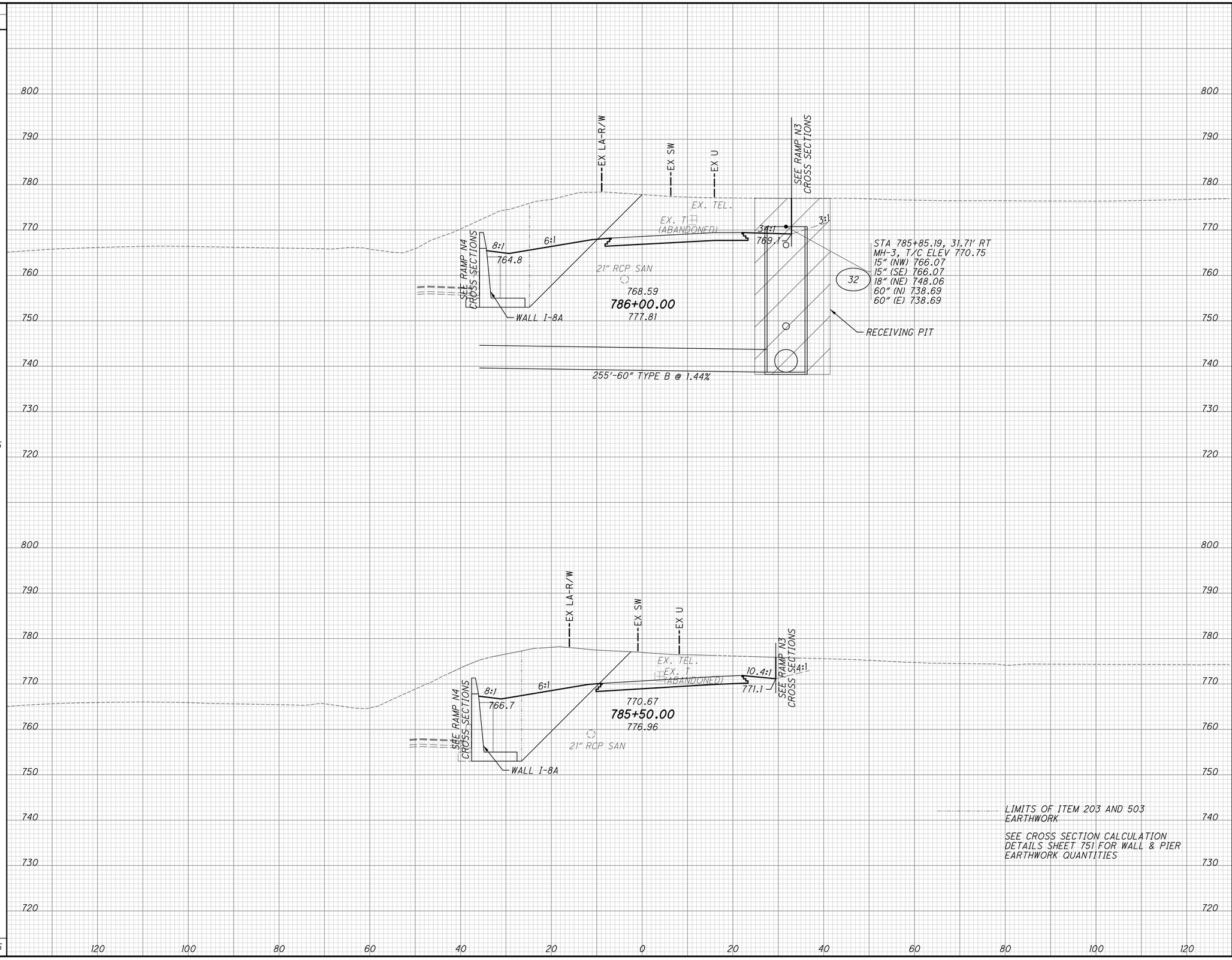

END AREA		VOLUME	
CUT	FILL	CUT	FILL
668	97		
		1124	207
547	127	0	0
		1124	207

CALCULATED MAH
CHECKED BSB

CROSS SECTIONS RAMP N2
STA. 785+50.00 TO STA. 786+00.00

FRA-70-14.54

904
2317

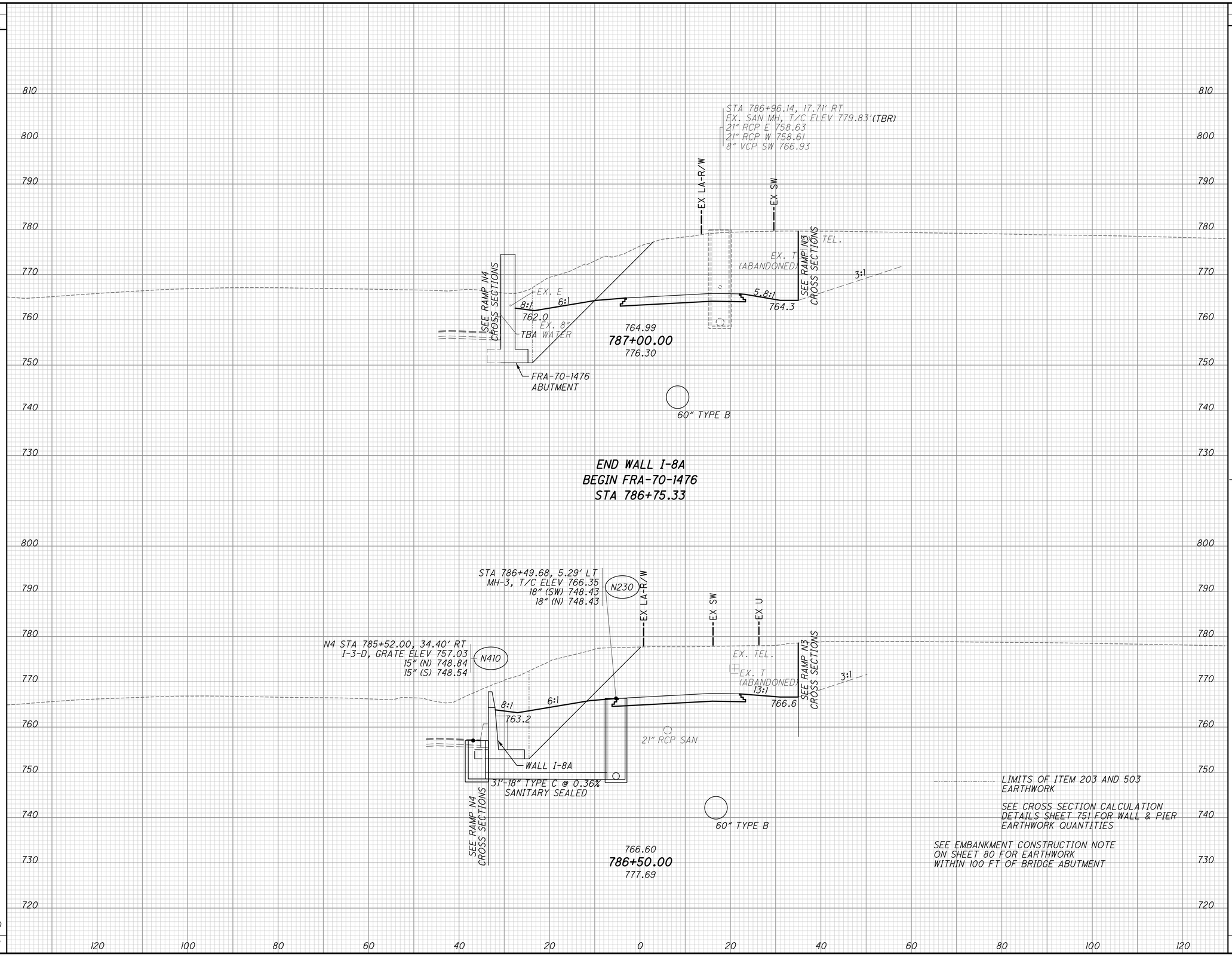

END AREA CUT	END AREA FILL	VOLUME CUT	VOLUME FILL
797	0		
		729	0
797	0	AH	
762	69	BK	
		715	65
762	69		
		1324	154
		2768	219

CALCULATED MAH
CHECKED BSB

CROSS SECTIONS RAMP N2
STA. 786+50.00 TO STA. 787+00.00

FRA-70-14.54

905
2317

ms consultants, inc.

PLOT.CEL

ms consultants, inc.
msconsultants.com

Ohio DOT Workspace
70\71 East Interchange 2E
www.msconsultants.com

Batchplot Spec: \\msconsultants.com\files\production\03\60\06634_2E\standards\plotdrv\batchplt.spc
Pen Table: \\msconsultants.com\files\Standards\ustn\ohdot\V8i\ms\plotting\pen\V8i_ms_std.tbl
Plot Driver: \\msconsultants.com\files\Standards\ustn\ohdot\v8i\ms\plotting\PDF.pltcfg

34" x 22"

View: FENCE_VIEW1
By: jdouglas
Model: Sheet
Printed: 6/19/2018 @ 8:56:37 AM
File: N:\03\60\06634_2E\roadway\sheets\105322XS1362.dgn

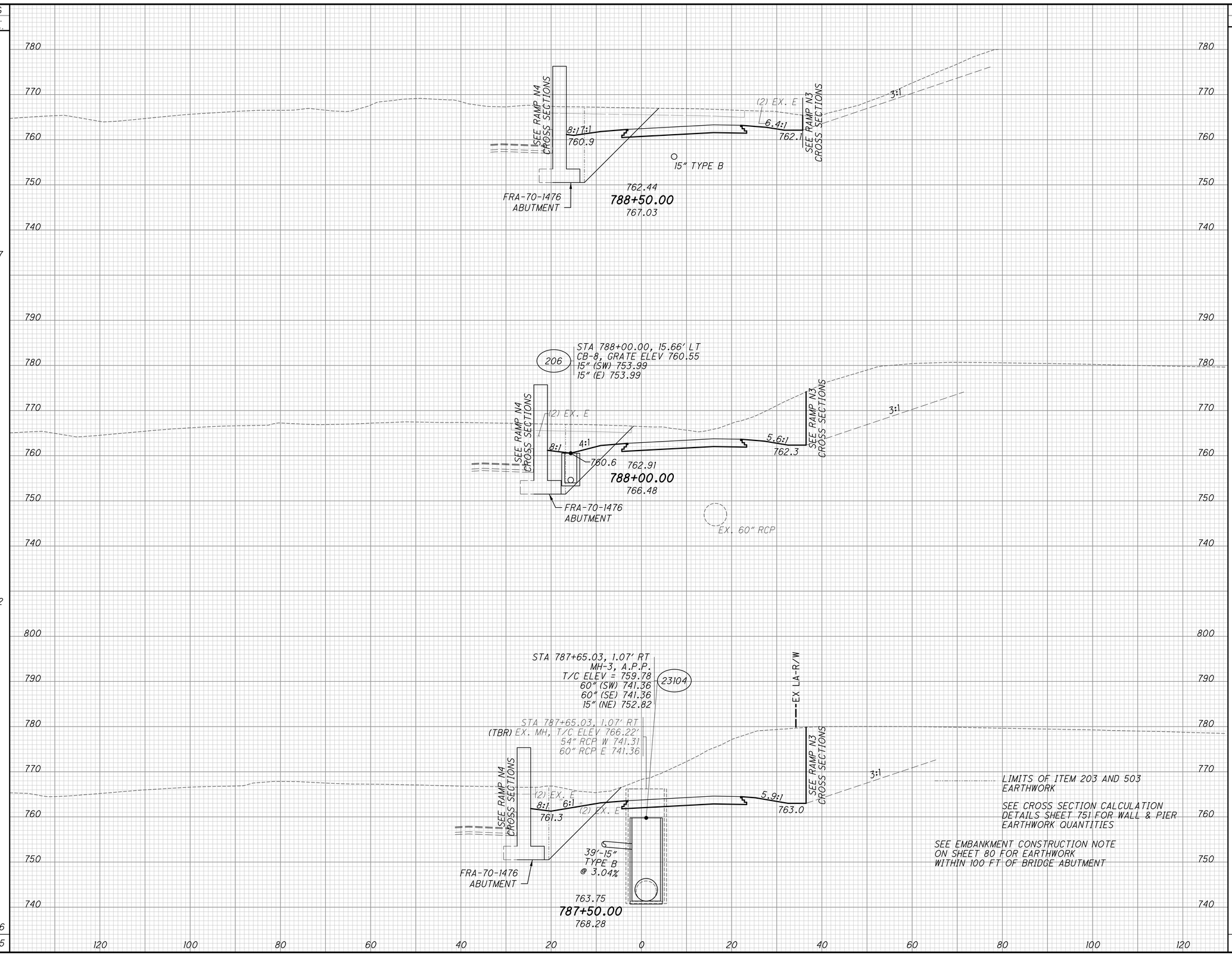

END AREA CUT	END AREA FILL	VOLUME CUT	VOLUME FILL
308	0		
		611	0
353	0		
		885	0
603	0		
		1297	0
		2793	0

CALCULATED MAH
CHECKED BSB

CROSS SECTIONS RAMP N2
STA. 787+50.00 TO STA. 788+50.00

FRA-70-14.54

906
2317

ms consultants, inc.

PLOT.CEL
ms consultants, inc.
msconsultants.com
Ohio DOT Workspace
70\71 East Interchange 2E
www.msconsultants.com
Batchplot Spec: \\msconsultants.com\files\production\03\60\06634_2E\standards\plotdrv\batchplt.spc
Pen Table: \\msconsultants.com\files\Standards\ustn\ohdot\V8i\ms\plotting\pen\V8i_ms_std.tbl
Plot Driver: \\msconsultants.com\files\Standards\ustn\ohdot\v8i\ms\plotting\PDF.pltcfg
34" x 22"
View: FENCE_VIEW1
By: jdouglas
Model: Sheet
Printed: 6/19/2018 @ 8:56:38 AM
File: N:\03\60\06634_2E\roadway\sheets\105322XS1363.dgn

PLOT.CEL

ms consultants, inc.
msconsultants.com

www.msconsultants.com

Ohio DOT Workspace
70\71 East Interchange 2E

0 0.5" 1"

34" x 22"

Batchplot Spec: \\msconsultants.com\files\production\03\60\06634_2E\standards\plotdrv\batchplt.spc
Pen Table: \\msconsultants.com\files\Standards\usth\ohdot\V8i\ms\plotting\pen\V8i_ms_std.tbl PCF: ohdotV8i
Plot Driver: \\msconsultants.com\files\Standards\usth\ohdot\v8i\ms\plotting\PDF.pltcfg PCF: 60-06634_2E_Columbus

Model: Sheet View: FENCE_VIEW1
Printed: 6/19/2018 @ 8:56:39 AM By: jdougas
File: N:\03\60\06634_2E\roadway\sheets\05322X51364.dgn

SEEDING	
END WIDTH	SQ. YDS.
11	72
15	117
	184

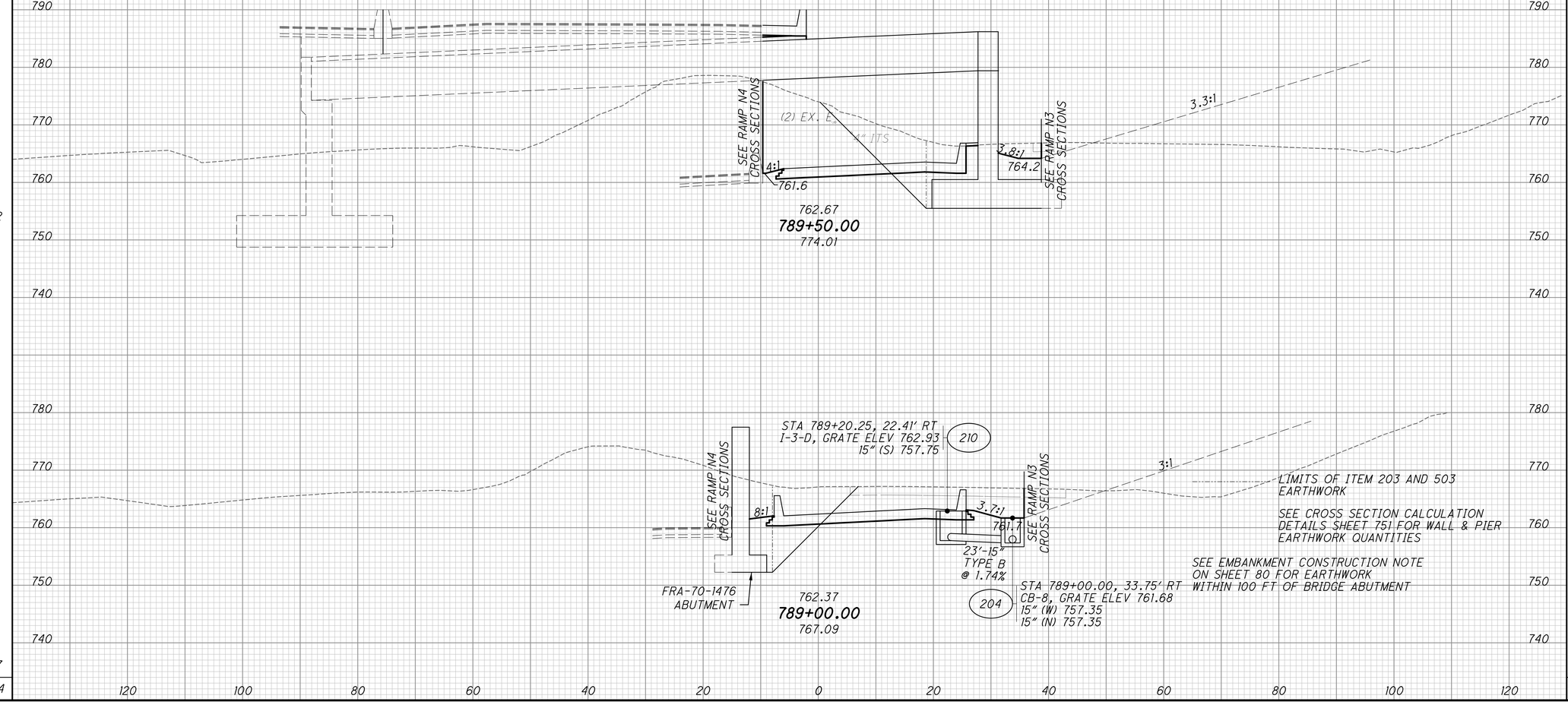

END AREA		VOLUME	
CUT	FILL	CUT	FILL
		333	0
		573	0
		287	0
		550	0
		1123	0

CALCULATED MAH
CHECKED BSB

CROSS SECTIONS RAMP N2
STA. 789+00.00 TO STA. 789+50.00

FRA-70-14.54

907
2317

PLOT.CEL

ms consultants, inc.
msconsultants.com

www.msconsultants.com

Ohio DOT Workspace
70\71 East Interchange 2E

1" 0 0.5"

Batchplot Spec: \\msconsultants.com\files\production\Q3\60\06634_2E\standards\plotdrv\batchplt.spc
Pen Table: \\msconsultants.com\files\Standards\usth\ohdot\V8i\ms\plotting\pen\V8i_ms_std.tbl PCF: ohdot_2E_Columbus
Plot Driver: \\msconsultants.com\files\Standards\usth\ohdot\v8i\ms\plotting\PDF.pltcfg

Model: Sheet View: FENCE_VIEW1
Printed: 6/19/2018 @ 8:56:41 AM By: jdouglas
File: N:\03\60\06634_2E\roadway\sheets\05322XS1367.dgn

34" x 22"

SEEDING	
END WIDTH	SQ. YDS.
0	0
	0
0	0
	0

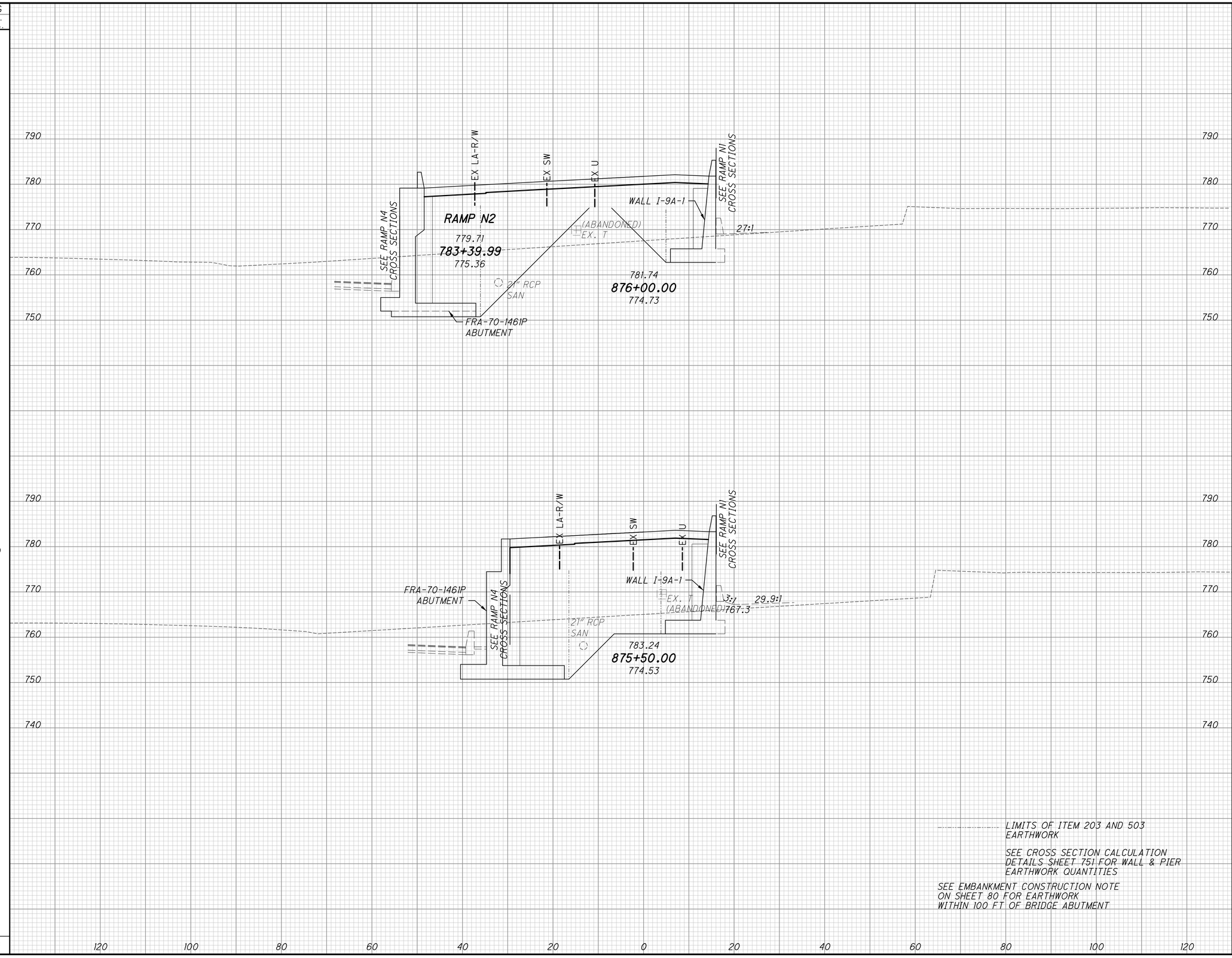

LIMITS OF ITEM 203 AND 503 EARTHWORK

SEE CROSS SECTION CALCULATION DETAILS SHEET 751 FOR WALL & PIER EARTHWORK QUANTITIES

SEE EMBANKMENT CONSTRUCTION NOTE ON SHEET 80 FOR EARTHWORK WITHIN 100 FT OF BRIDGE ABUTMENT

END AREA		VOLUME		
CUT	FILL	CUT	FILL	
124	856			AH
124	0			BK
		235	0	
130	0	0	0	
		235	0	

CALCULATED MAH
CHECKED BSB

CROSS SECTIONS RAMP N3
STA. 875+16.80 TO STA. 876+00.00

FRA-70-14.54

908
2317

ms consultants, inc.

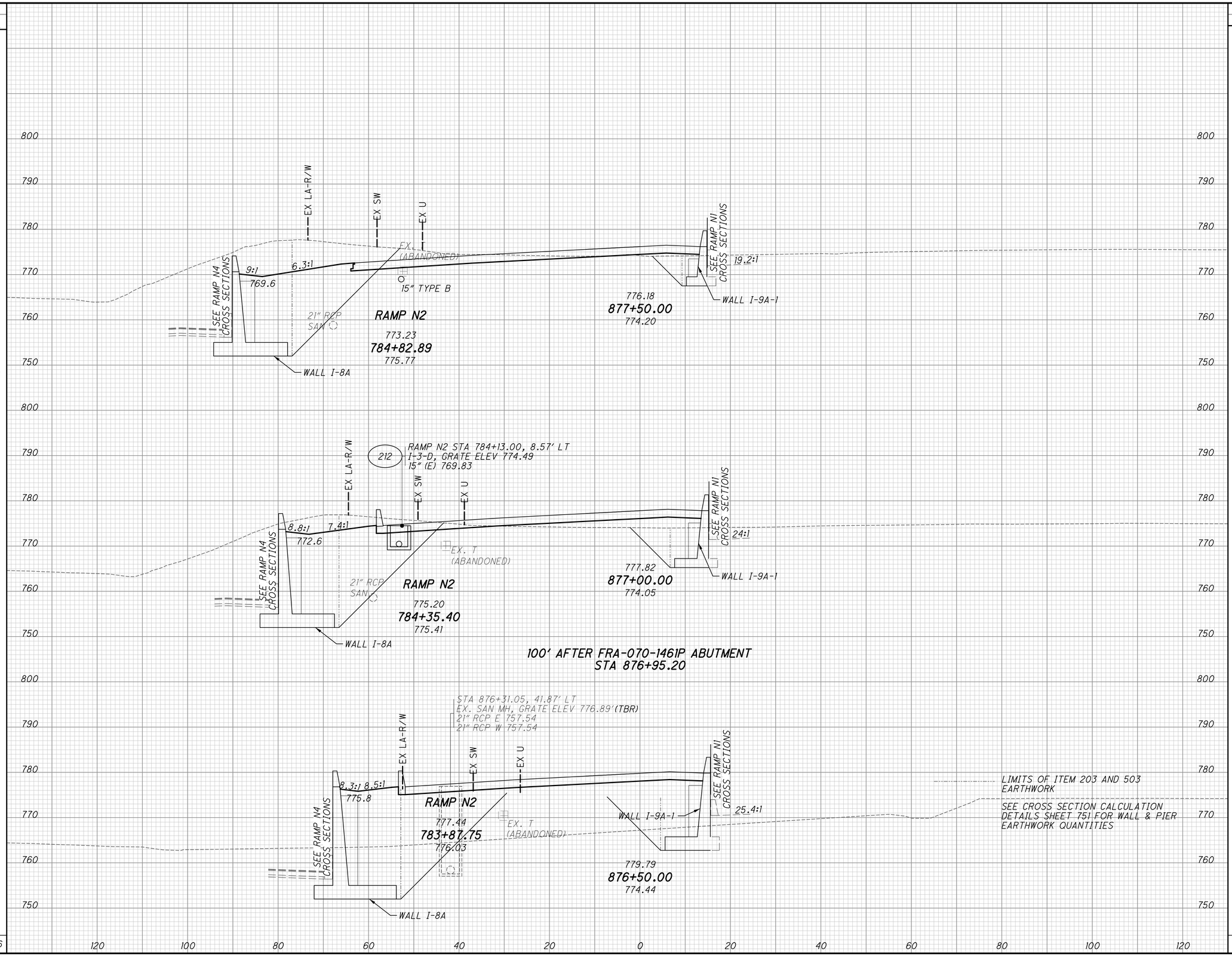

SEEDING END WIDTH	SEEDING SQ. YDS.	END AREA CUT	END AREA FILL	VOLUME CUT	VOLUME FILL
26		413	218		
	128			693	508
20		336	331		
	92			390	1155
13		85	916		
	36			193	1641
	256			1276	3304

CALCULATED MAH
CHECKED BSB

CROSS SECTIONS RAMP N3
STA. 876+50.00 TO STA. 877+50.00

FRA-70-14.54

909
2317

ms consultants, inc.

PLOT.CEL

ms consultants, inc.
msconsultants.com

Ohio DOT Workspace
70\71 East Interchange 2E
www.msconsultants.com

Batchplot Spec: \\msconsultants.com\files\production\03\60\06634_2E\standards\plotdrv\batchplt.spc
Pen Table: \\msconsultants.com\files\Standards\ustn\ohdot\V8i\ms\plotting\pen\V8i_ms_std.tbl
Plot Driver: \\msconsultants.com\files\Standards\ustn\ohdot\V8i\ms\plotting\PDF.pltcfg

34" x 22"

View: FENCE_VIEW1
By: jdouglas
Model: Sheet
Printed: 6/19/2018 @ 8:56:42 AM
File: N:\03\60\06634_2E\roadway\sheets\105322XS1368.dgn

PLOT.CEL

ms consultants, inc.
msconsultants.com

www.msconsultants.com

Ohio DOT Workspace
70\71 East Interchange 2E

1"
0.5"
0

Batchplot Spec: \\msconsultants.com\files\production\03\60\06634_2E\standards\plotdr\batchplt.spc
Pen Table: \\msconsultants.com\files\Standards\usth\ohdot\V8i\ms\plotting\pen\V8i_ms_std.tbl PCF: ohdotV8i
Plot Driver: \\msconsultants.com\files\Standards\usth\ohdot\v8i\ms\plotting\PDF.pltcfg PCF: 60-06634_2E_Columbus

34" x 22"

View: FENCE_VIEW1
By: jdouglas

Model: Sheet @ 8:56:43 AM
Printed: 6/19/2018
File: N:\03\60\06634_2E\roadway\sheets\D0522XS1369.dgn

SEEDING	
END WIDTH	SQ. YDS.
10	41
10	
16	
10	
5	
26	
	137
	199

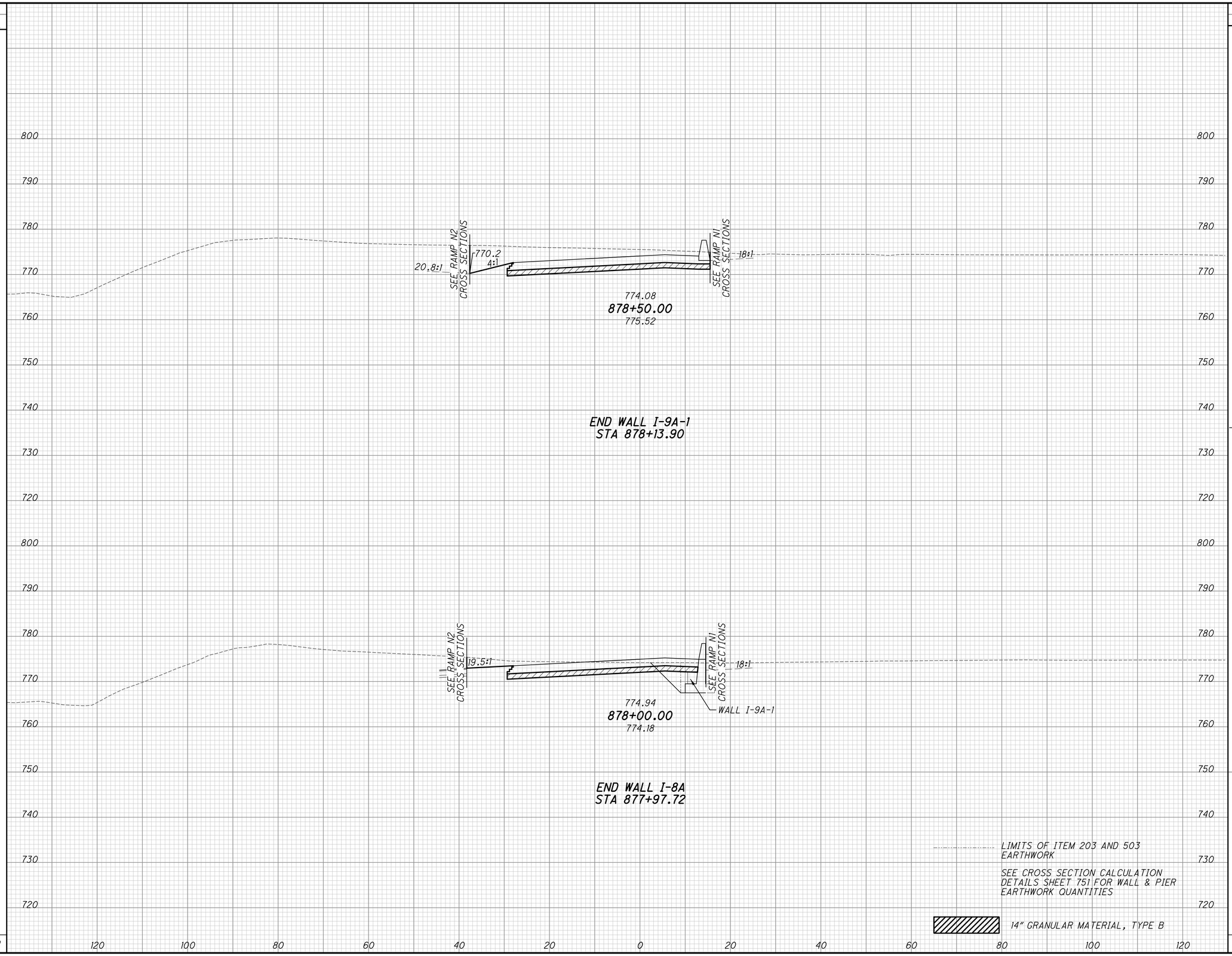

END AREA		VOLUME		
CUT	FILL	CUT	FILL	
210	1			
		281	1	
210	1			AH
90	12			BK
		46	6	
90	12			
		8	1	
90	12			AH
413	218			BK
		730	385	
		1065	393	

CALCULATED MAH
CHECKED BSB

CROSS SECTIONS RAMP N3
STA. 878+00.00 TO STA. 878+50.00

FRA-70-14.54

910
2317

PLOT.CEL

ms consultants, inc.
msconsultants.com

www.msconsultants.com

Ohio DOT Workspace
70\71 East Interchange 2E

1" 0 0.5"

Batchplot Spec: \\msconsultants.com\files\production\03\60\06634_2E\standards\plotdr\batchplt.spc
Pen Table: \\msconsultants.com\files\Standards\ustn\ohdot\V8i\ms\plotting\pen\V8i_ms_std.tbl PCF: ohdotV8i
Plot Driver: \\msconsultants.com\files\Standards\ustn\ohdot\V8i\ms\plotting\PDF.pltcfg PCF: 60-06634_2E_Columbus

Model: Sheet View: FENCE_VIEW1
Printed: 6/19/2018 @ 8:56:45 AM By: jdouglas
File: N:\03\60\06634_2E\roadway\sheets\1053229370.dgn

34" x 22"

SEEDING	
END WIDTH	SQ. YDS.
31	150
23	112
17	75
	337

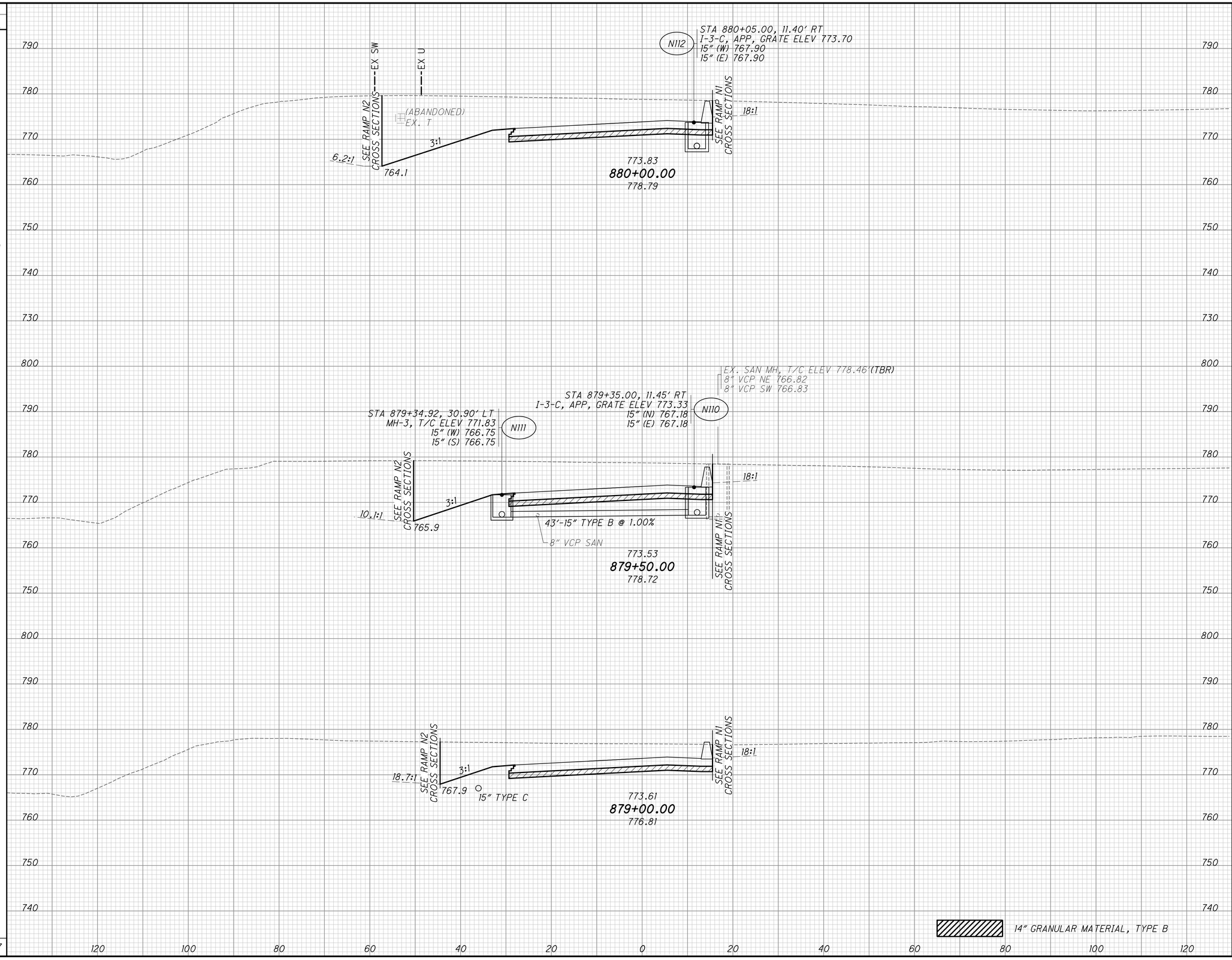

END AREA		VOLUME	
CUT	FILL	CUT	FILL
633	1		
		1085	2
540	1		
		821	2
347	1		
		516	2
		2422	6

CALCULATED MAH
CHECKED BSB

CROSS SECTIONS RAMP N3
STA. 879+00.00 TO STA. 880+00.00

FRA-70-14.54

911
2317

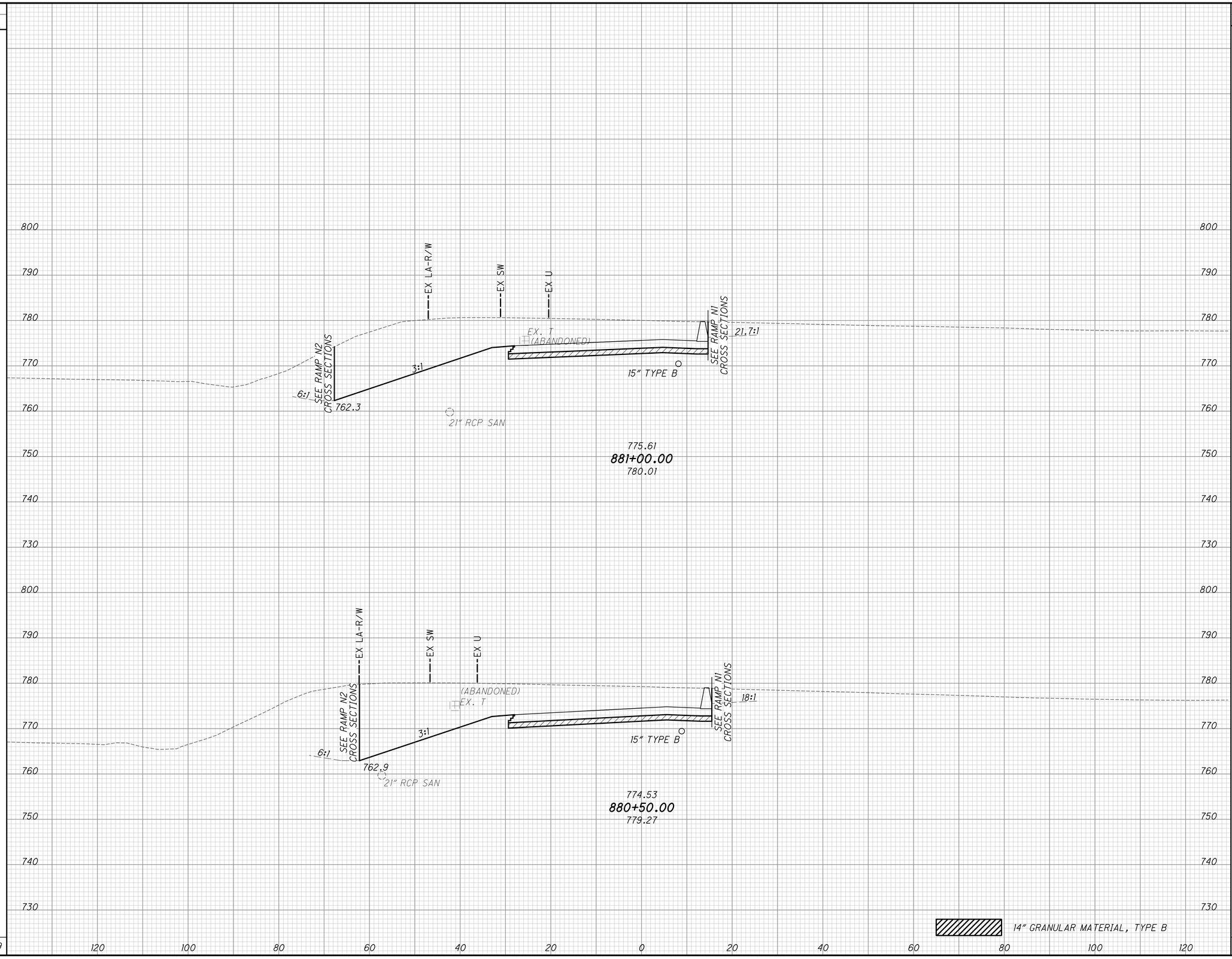

SEEDING END WIDTH	SEEDING SQ. YDS.	END AREA CUT	END AREA FILL	VOLUME CUT	VOLUME FILL
42		695	1		
	215			1291	2
36		699	1		
	184			1233	2
	399			2524	4

CALCULATED MAH
CHECKED BSB

CROSS SECTIONS RAMP N3
STA. 880+50.00 TO STA. 881+00.00

FRA-70-14.54

912
2317

PLOT.CEL
ms consultants, inc.
msconsultants.com
www.msconsultants.com
Ohio DOT Workspace
70\71 East Interchange 2E
Batchplot Spec: \\msconsultants.com\files\production\03\60\06634_2E\standards\plotdrv\batchplt.spc
Pen Table: \\msconsultants.com\files\Standards\ustn\ohdot\V8i\ms\plotting\pen\V8i_ms_std.tbl
Plot Driver: \\msconsultants.com\files\Standards\ustn\ohdot\v8i\ms\plotting\PDF.pltcfg
34" x 22"
View: FENCE_VIEW1
By: jdouglas
Model: Sheet
Printed: 6/19/2018 @ 8:56:46 AM
File: N:\03\60\06634_2E\roadway\sheets\105322XS1371.dgn
ms consultants, inc.

PLOT.CEL

ms consultants, inc.
msconsultants.com

www.msconsultants.com

Ohio DOT Workspace
70\71 East Interchange 2E

0 1" 0.5"

Batchplot Spec: \\msconsultants.com\files\production\03\60\06634_2E\standards\plotdrv\batchplt.spc
Pen Table: \\msconsultants.com\files\Standards\usth\ohdot\V8i\ms\plotting\pen\V8i_ms_std.tbl PCF: ohdotV8i
Plot Driver: \\msconsultants.com\files\Standards\usth\ohdot\V8i\ms\plotting\PDF.pltcfg PCF: 60-06634_2E_Columbus

Model: Sheet View: FENCE_VIEW1
Printed: 6/19/2018 @ 8:56:47 AM By: jdouglas
File: N:\03\60\06634_2E\roadway\sheets\105322X3172.dgn

34" x 22"

SEEDING END WIDTH	SEEDING SQ. YDS.
56	
	221
56	
	289
48	
	249
	759

BEGIN FRA-07-1476 L/R (FOOTER)
STA 882+35.50

EX LA-R/W
EX SW
EX U
EX. T (ABANDONED)
EX. E
EX. 60" RCP
21" RCP SAN

SEE RAMP N1 CROSS SECTIONS
SEE RAMP N2 CROSS SECTIONS

25:1
23.4:1
3:1
5.1:1
6.8:1

778.93
882+00.00
781.13

761.7
762.2

N106 STA 881+59.24, 9.82' RT
I-3-C, APP, GRATE ELEV 776.82
15" (W) 771.02

777.07
881+50.00
780.62

881+50.00

SEE EMBANKMENT CONSTRUCTION NOTE ON SHEET 80 FOR EARTHWORK WITHIN 100 FT OF BRIDGE ABUTMENT

14" GRANULAR MATERIAL, TYPE B

END AREA CUT	END AREA FILL	VOLUME CUT	VOLUME FILL
116	0	AH	
167	169	BK	
		219	222
167	169		
		530	157
406	1		
		1019	2
		1768	381

CALCULATED MAH
CHECKED BSB

CROSS SECTIONS RAMP N3
STA. 881+50.00 TO STA. 882+00.00

FRA-70-14.54

913
2317

ms consultants, inc.

PLOT.CEL

ms consultants, inc.
msconsultants.com

www.msconsultants.com

Ohio DOT Workspace
70\71 East Interchange 2E

1" 0.5" 0

PCF: ohdot\V8i
PCF: 60-06634_2E_Columbus

Batchplot Spec: \\msconsultants.com\Files\Production\Q3\60\06634_2E\standards\plotdir\batchplt.spc
Pen Table: \\msconsultants.com\Files\Standards\usth\ohdot\V8i\ms\plotting\pen\V8i_ms_std.tbl
Plot Driver: \\msconsultants.com\Files\Standards\usth\ohdot\V8i\ms\plotting\PDF.pltcfg

34" x 22"

View: FENCE_VIEW1
By: jdouglas

Model: Sheet
Printed: 6/19/2018 @ 8:56:48 AM
File: N:\03\60\06634_2E\roadway\sheets\105322\53173.dgn

SEEDING	
END WIDTH	SQ. YDS.
42	223
62	79
62	95
	616

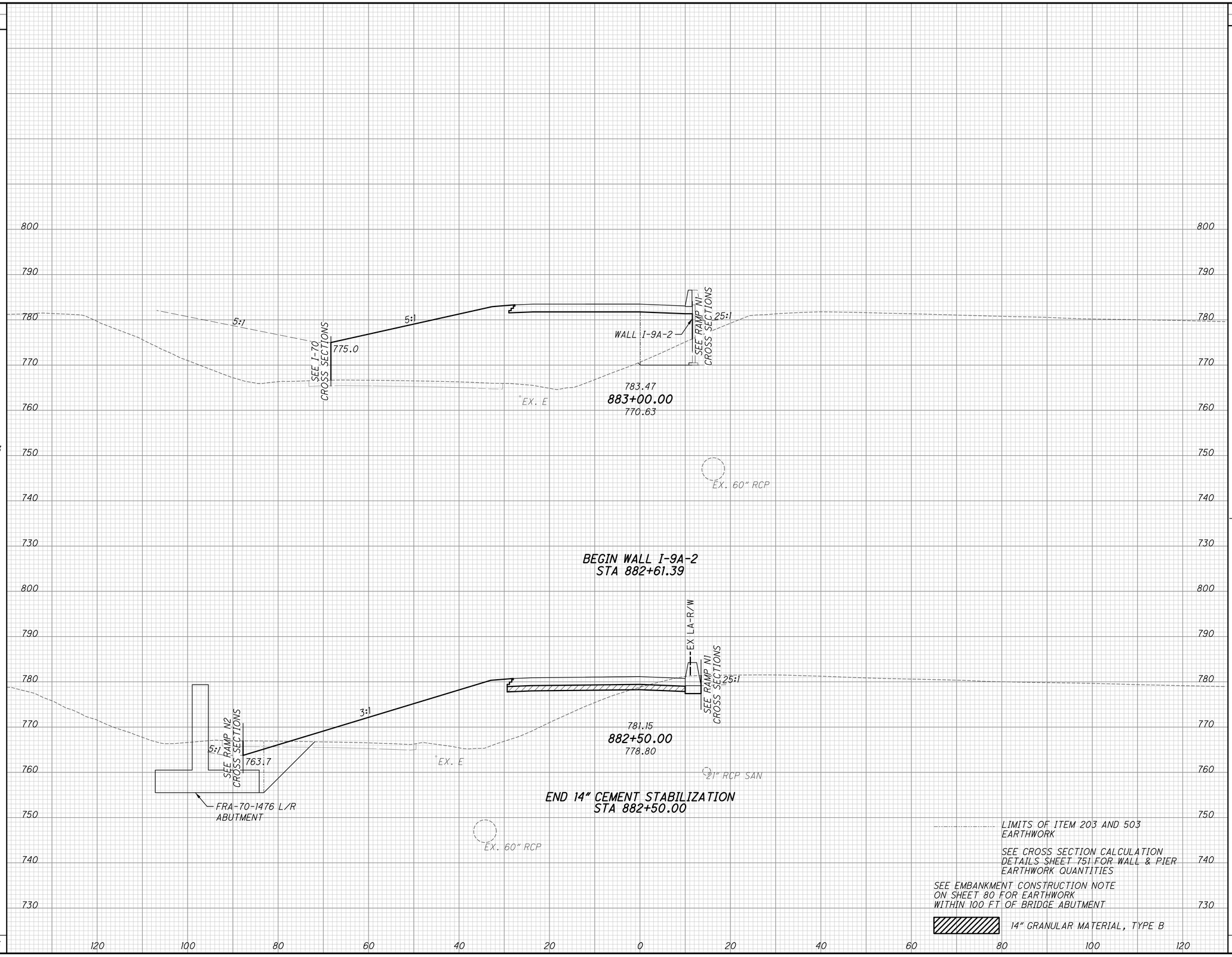

END AREA		VOLUME	
CUT	FILL	CUT	FILL
48	998		
		69	1496
48	998	AH	
116	0	BK	
		49	0
116	0		
		62	0
		180	1496

CALCULATED MAH
CHECKED BSB

CROSS SECTIONS RAMP N3
STA. 882+50.00 TO STA. 883+00.00

FRA-70-14.54

914
2317

ms consultants, inc.

PLOT.CEL

ms consultants, inc.
msconsultants.com

www.msconsultants.com

Ohio DOT Workspace
70\71 East Interchange 2E

0 0.5" 1"

Batchplot Spec: \\msconsultants.com\files\production\Q3\60\06634_2E\standards\plotdrv\batchplt.spc
Pen Table: \\msconsultants.com\files\Standards\usitn\ohdot\V8i\ms\plotting\pen\V8i_ms_std.tbl
Plot Driver: \\msconsultants.com\files\Standards\usitn\ohdot\v8i\ms\plotting\PDF.pltcfg

34" x 22"

View: FENCE_VIEW1
By: jdouglas
Model: Sheet
Printed: 6/19/2018 @ 8:56:50 AM
File: N:\03\60\06634_2E\roadway\sheets\105322X3374.dgn

SEEDING	
END WIDTH	SQ. YDS.
16	96
18	166
	262

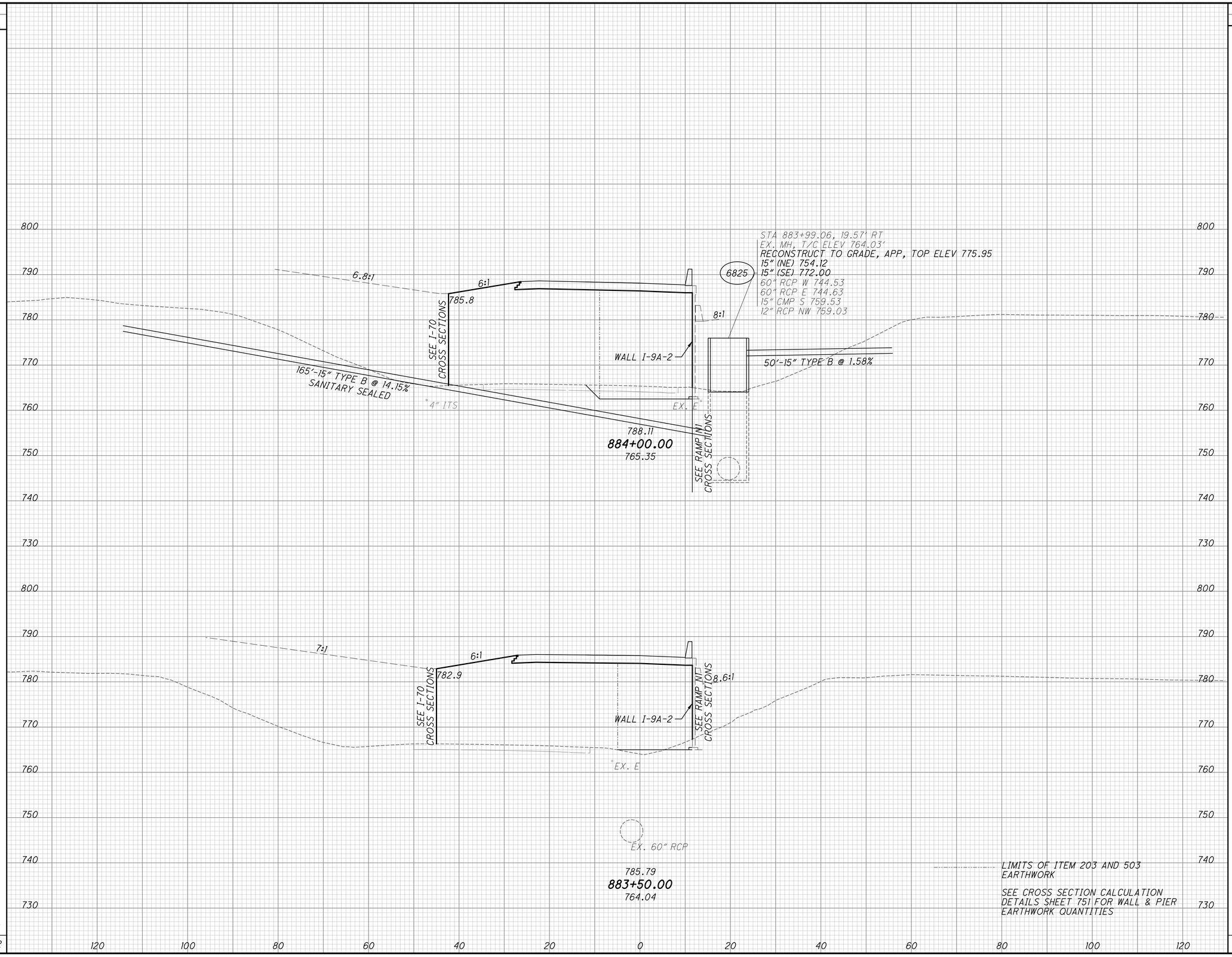

END AREA		VOLUME	
CUT	FILL	CUT	FILL
34	741		
		71	1407
43	779		
		83	1645
		154	3052

CALCULATED MAH
CHECKED BSB

CROSS SECTIONS RAMP N3
STA. 883+50.00 TO STA. 884+00.00

FRA-70-14.54

915
2317

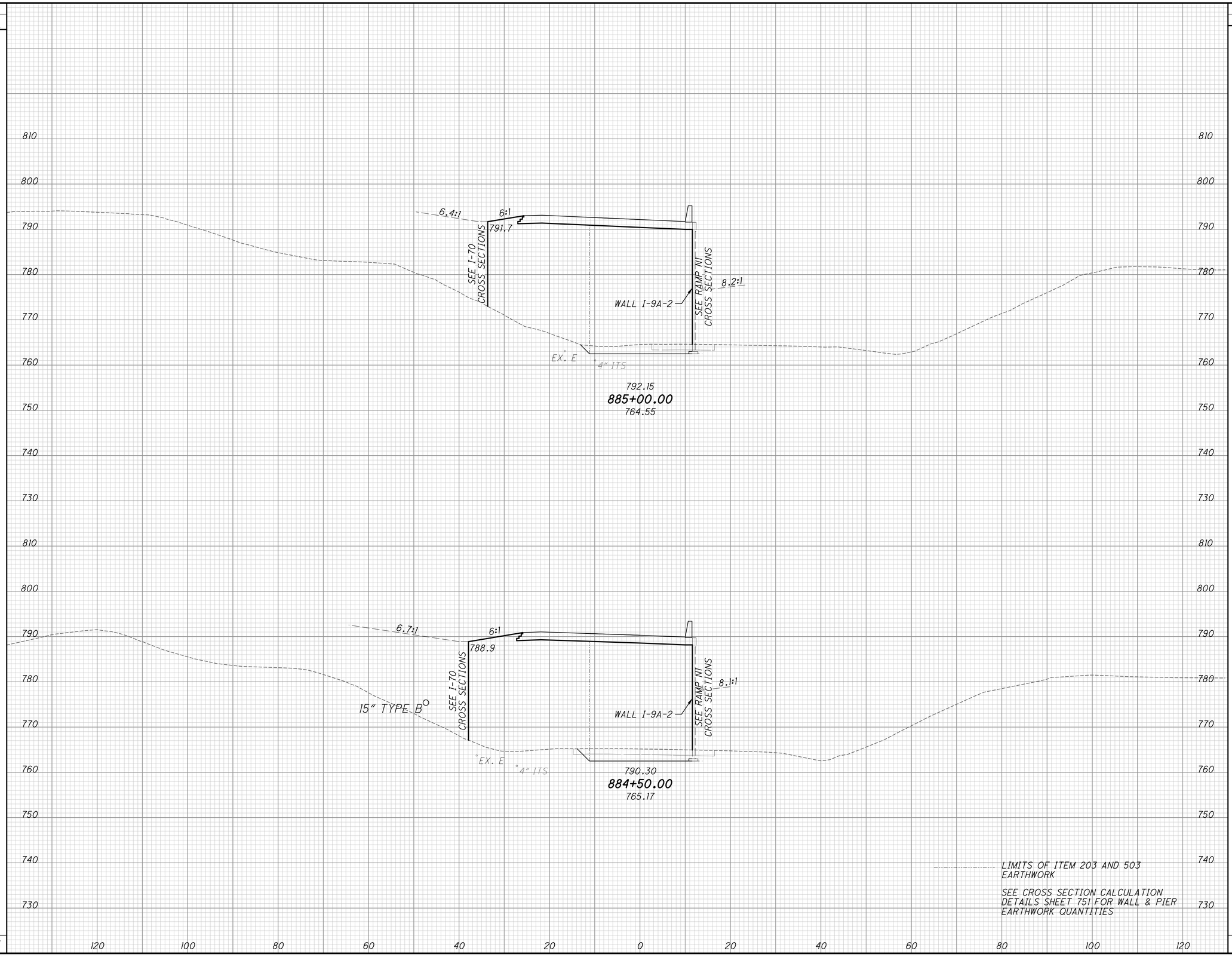

SEEDING END WIDTH	SEEDING SQ. YDS.	END AREA CUT	END AREA FILL	VOLUME CUT	VOLUME FILL
8		2	532		
	56			7	1098
12		6	654		
	79			37	1291
	135			44	2389

CALCULATED MAH
CHECKED BSB

CROSS SECTIONS RAMP N3
STA. 884+50.00 TO STA. 885+00.00

FRA-70-14.54

916
2317

ms consultants, inc.

PLOT.CEL

ms consultants, inc.
msconsultants.com

www.msconsultants.com

Ohio DOT Workspace
70\71 East Interchange 2E

Batchplot Spec: \\msconsultants.com\files\production\03\60\06634_2E\standards\plotdrv\batchplt.spc
Pen Table: \\msconsultants.com\files\Standards\ustn\ohdot\V8i\ms\plotting\pen\V8i_ms_std.tbl
Plot Driver: \\msconsultants.com\files\Standards\ustn\ohdot\v8i\ms\plotting\PDF.pltcfg

34" x 22"

Model: Sheet
Printed: 6/19/2018 @ 8:56:51 AM
File: N:\03\60\06634_2E\roadway\sheets\105322XS1375.dgn
View: FENCE_VIEW1
By: jdouglas

PLOT.CEL

ms consultants, inc.
msconsultants.com

www.msconsultants.com

Ohio DOT Workspace
70\71 East Interchange 2E

0 0.5" 1"

Batchplot Spec: \\msconsultants.com\files\production\Q3\60\06634_2E\standards\plotdrv\batchplt.spc
Pen Table: \\msconsultants.com\files\Standards\usitn\ohdot\V8i\ms\plotting\pen\V8i_ms_std.tbl
Plot Driver: \\msconsultants.com\files\Standards\usitn\ohdot\v8i\ms\plotting\PDF.pltcfg

Model: Sheet
Printed: 6/19/2018 @ 8:56:52 AM
File: N:\03\60\06634_2E\roadway\sheets\D5322XS376.dgn

View: FENCE_VIEW1
By: jdouglas

34" x 22"

SEEDING	
END WIDTH	SQ. YDS.
4	
	32
7	
	43
	75

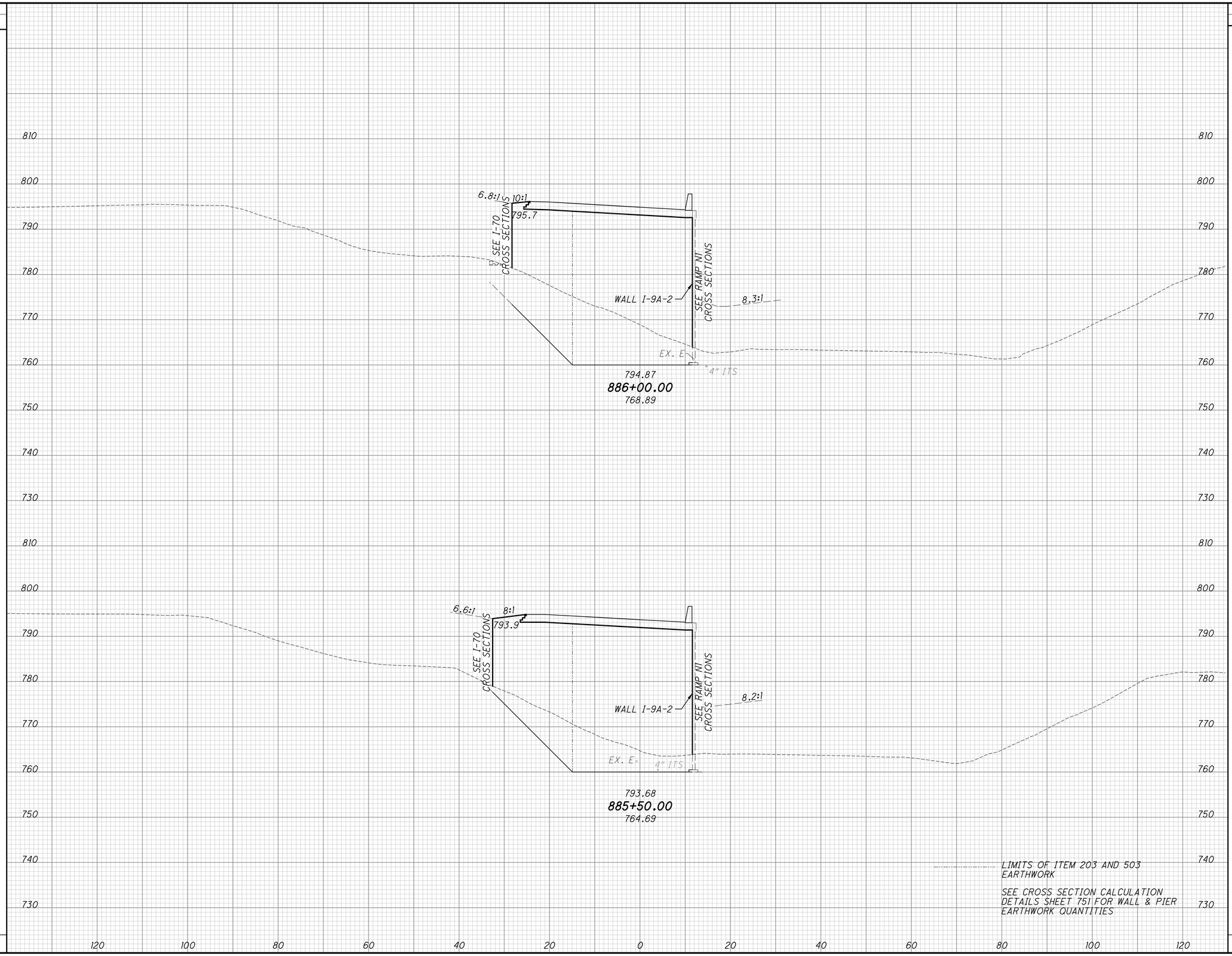

END AREA		VOLUME	
CUT	FILL	CUT	FILL
156	374		
		245	750
108	436		
		102	896
		347	1646

CALCULATED MAH
CHECKED BSB

CROSS SECTIONS RAMP N3
STA. 885+50.00 TO STA. 886+00.00

FRA-70-14.54

917
2317

PLOT.CEL

ms consultants, inc.
msconsultants.com

www.msconsultants.com

Ohio DOT Workspace
70\71 East Interchange 2E

0 0.5" 1"

Batchplot Spec: \\msconsultants.com\Files\Production\03\60\06634_2E\standards\plotdrv\batchplt.spc
Pen Table: \\msconsultants.com\Files\Standards\usth\ohdot\V8i\ms\plotting\pen\V8i_ms_std.tbl PCF: ohdotV8i
Plot Driver: \\msconsultants.com\Files\Standards\usth\ohdot\v8i\ms\plotting\PDF.pltcfg PCF: 60-06634_2E_Columbus

Model: Sheet View: FENCE_VIEW1
Plotted: 6/19/2018 @ 8:56:53 AM By: jdouglas
File: N:\03\60\06634_2E\roadway\sheets\105322X1377.dgn

34" x 22"

SEEDING	
END WIDTH	SQ. YDS.
0	
0	
11	
11	

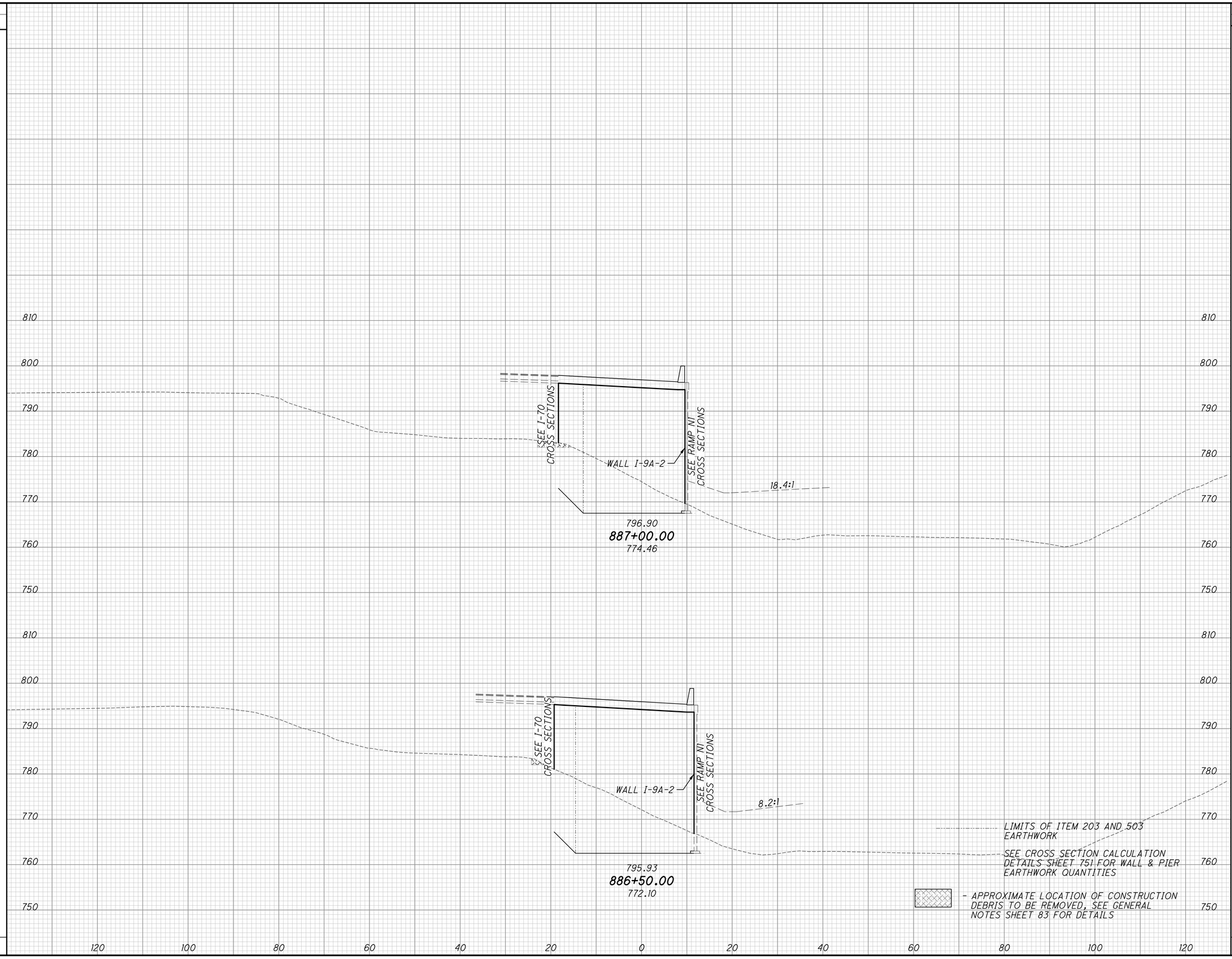

END AREA		VOLUME	
CUT	FILL	CUT	FILL
63	141		
		125	263
72	143		
		211	478
		336	741

CALCULATED MAH
CHECKED BSB

CROSS SECTIONS RAMP N3
STA. 886+50.00 TO STA. 887+00.00

FRA-70-14.54

ms consultants, inc.

PLOT.CEL

ms consultants, inc.
msconsultants.com

www.msconsultants.com

Ohio DOT Workspace
70\71 East Interchange 2E

1" 0.5" 0

Batchplot Spec: \\msconsultants.com\files\production\03\60\06634_2E\standards\oladr\batchplt.spc
Pen Table: \\msconsultants.com\files\Standards\usth\ohdot\V8i\ms\plotting\pen\V8i_ms_std.tbl PCF: ohdot\V8i
Plot Driver: \\msconsultants.com\files\Standards\usth\ohdot\v8i\ms\plotting\PDF.pltcfg PCF: 60-06634_2E_Columbus

34" x 22"

View: FENCE_VIEW1
By: jdoughas

Model: Sheet @ 8:56:56 AM
Printed: 6/19/2018
File: N:\03\60\06634_2E\roadway\sheets\105322X1225.dgn

SEEDING	
END WIDTH	SQ. YDS.
0	0
0	0
0	0
0	0
0	0
0	0
0	0

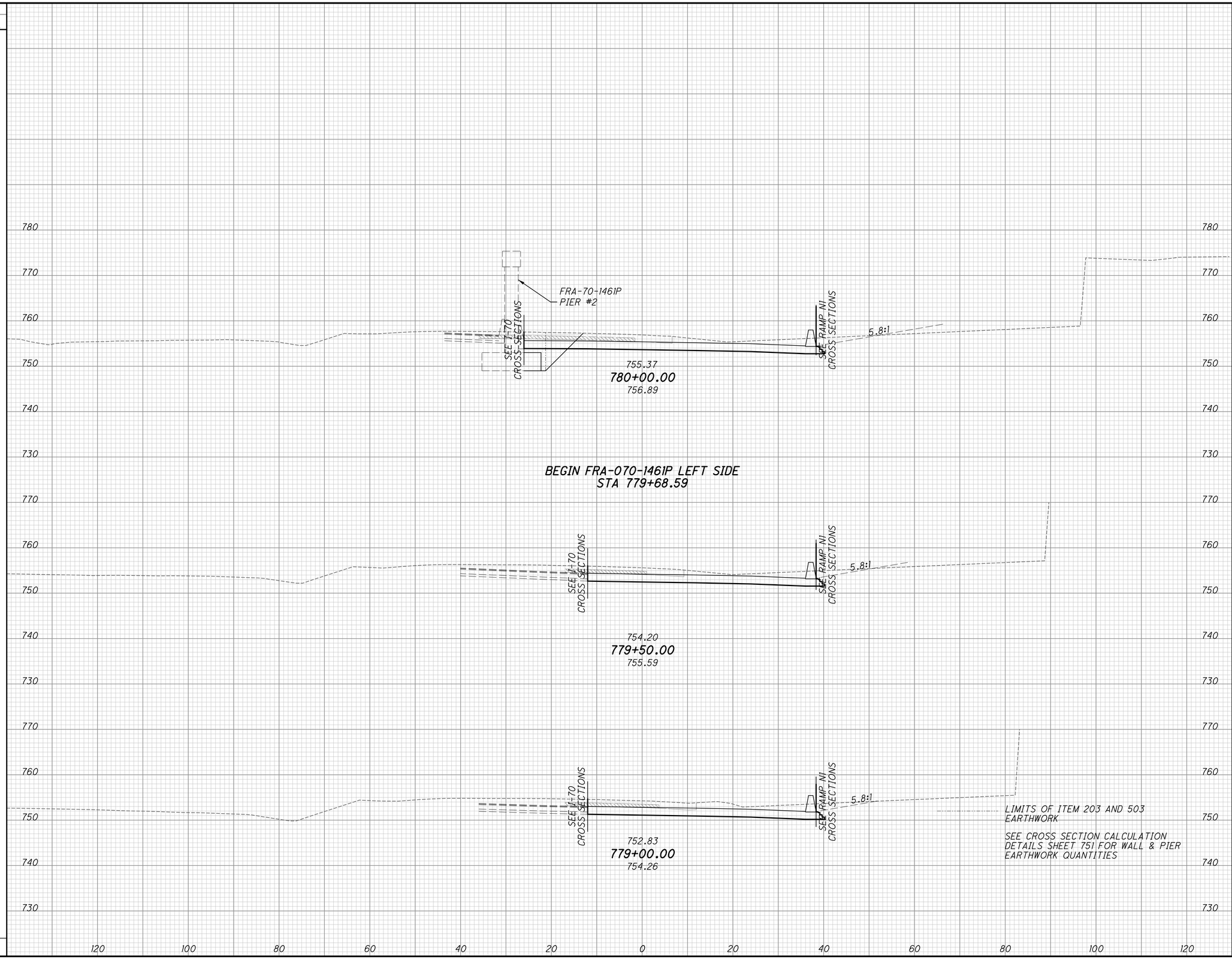

END AREA		VOLUME	
CUT	FILL	CUT	FILL
174	12		
		203	14
174	12	AH	
131	0	BK	
		90	0
131	0		
		249	0
		0	0
138	0		
		542	14

CALCULATED MAH
CHECKED BSB

CROSS SECTIONS RAMP N4
STA. 779+00.00 TO STA. 780+00.00

FRA-70-14.54

919
2317

PLOT.CEL

ms consultants, inc.
msconsultants.com

www.msconsultants.com

Ohio DOT Workspace
70\71 East Interchange 2E

1" 0 0.5"

Batchplot Spec: \\msconsultants.com\files\production\Q3\60\06634_2E\standards\plotdrv\batchplt.spc
Pen Table: \\msconsultants.com\files\Standards\usth\ohdot\V8i\ms\plotting\pen\V8i_ms_std.tbl
Plot Driver: \\msconsultants.com\files\Standards\usth\ohdot\V8i\ms\plotting\PDF.pltcfg

PCF: ohdotV8i
PCF: 60-06634_2E_Columbus

Model: Sheet
Printed: 6/19/2018 @ 8:56:57 AM
File: N:\03\60\06634_2E\roadway\sheets\105322KS226.dgn

View: FENCE_VIEW1
By: jdouglas

34" x 22"

SEEDING	
END WIDTH	SQ. YDS.
14	56
10	8
10	43
6	15
	122

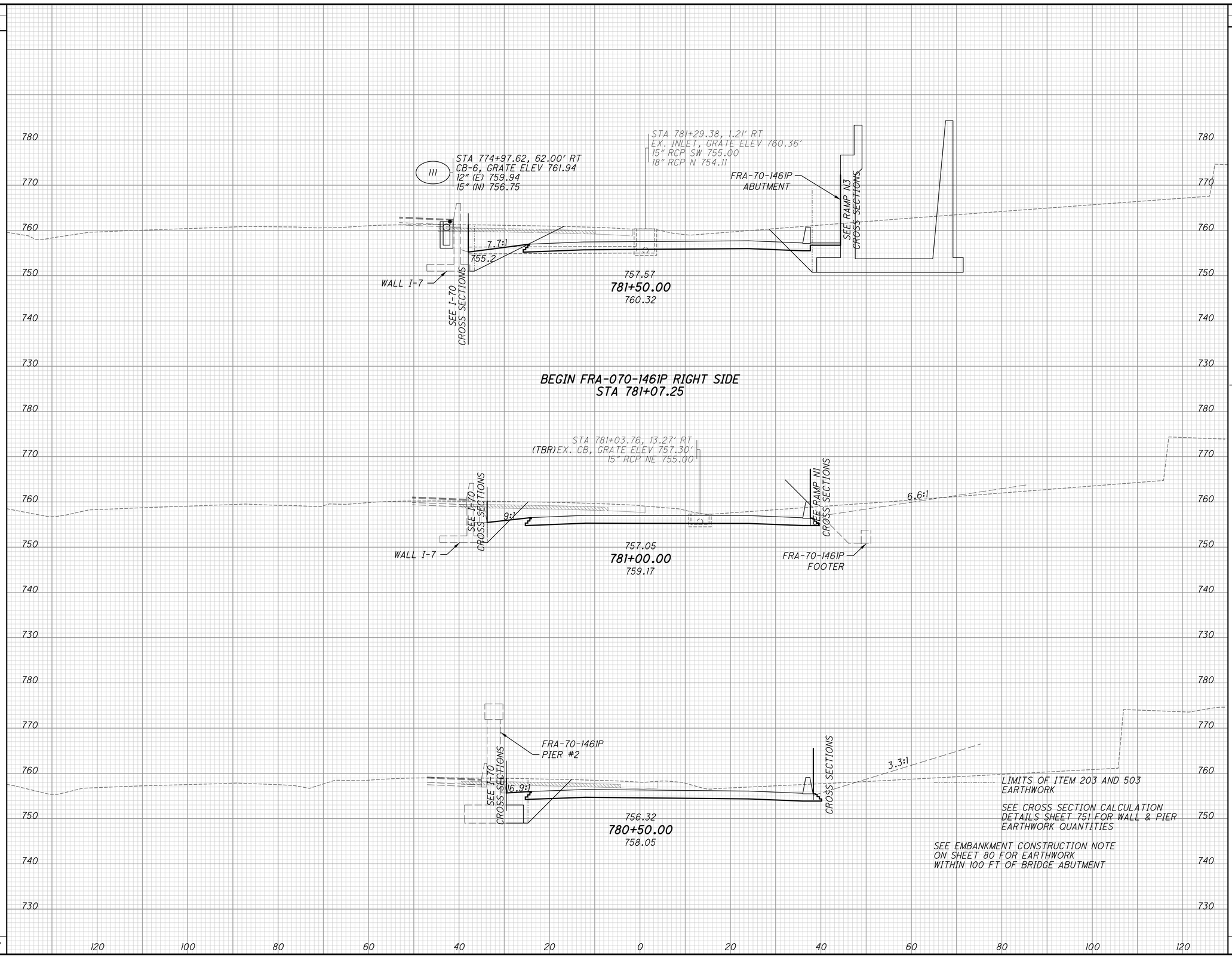

END AREA		VOLUME		
CUT	FILL	CUT	FILL	
360	27			
		570	43	
360	27			AH
255	12			BK
		68	3	
255	12			
		434	25	
214	14			
		359	24	
		1431	95	

CALCULATED MAH
CHECKED BSB

CROSS SECTIONS RAMP N4
STA. 780+50.00 TO STA. 781+50.00

FRA-70-14.54

920
2317

PLOT.CEL

ms consultants, inc.
msconsultants.com

www.msconsultants.com

Ohio DOT Workspace
70\71 East Interchange 2E

1" 0.5" 0

DCF: ohdot\V8i
DCF: 60-06634_2E_Columbus

Batchplot Spec: \\msconsultants.com\files\production\03\60\06634_2E\standards\plotdir\batchplt.spc
Pen Table: \\msconsultants.com\files\Standards\usth\ohdot\V8i\ms\plotting\pen\V8i_ms_std.tbl
Plot Driver: \\msconsultants.com\files\Standards\usth\ohdot\v8i\ms\plotting\PDF.pltcfg

Model: Sheet View: FENCE_VIEW1
Printed: 6/19/2018 @ 8:56:58 AM By: jdoughas
File: N:\03\60\06634_2E\roadway\sheets\1053ZXS1227.dgn

34" x 22"

SEEDING	
END WIDTH	SQ. YDS.
17	
	27
17	
	86
14	
	78
	191

END FRA-70-1461P
STA 782+64.71

FRA-70-1461P ABUTMENT
SEE RAMP N3 CROSS SECTIONS
SEE I-70 CROSS SECTIONS
6:1
754.9
WALL I-7
757.97
782+50.00
761.72

FRA-70-1461P ABUTMENT
SEE RAMP N3 CROSS SECTIONS
SEE I-70 CROSS SECTIONS
6:1
755.2
WALL I-7
757.88
782+00.00
761.08

790 780 770 760 750 740 730

120 100 80 60 40 20 0 20 40 60 80 100 120

LIMITS OF ITEM 203 AND 503 EARTHWORK

SEE CROSS SECTION CALCULATION DETAILS SHEET 751 FOR WALL & PIER EARTHWORK QUANTITIES

SEE EMBANKMENT CONSTRUCTION NOTE ON SHEET 80 FOR EARTHWORK WITHIN 100 FT OF BRIDGE ABUTMENT

END AREA		VOLUME	
CUT	FILL	CUT	FILL
570	36	AH	
481	22	BK	
		262	12
481	22		
		830	42
415	23		
		718	46
		1810	100

CALCULATED MAH
CHECKED BSB

CROSS SECTIONS RAMP N4
STA. 782+00.00 TO STA. 782+50.00

FRA-70-14.54

921
2317

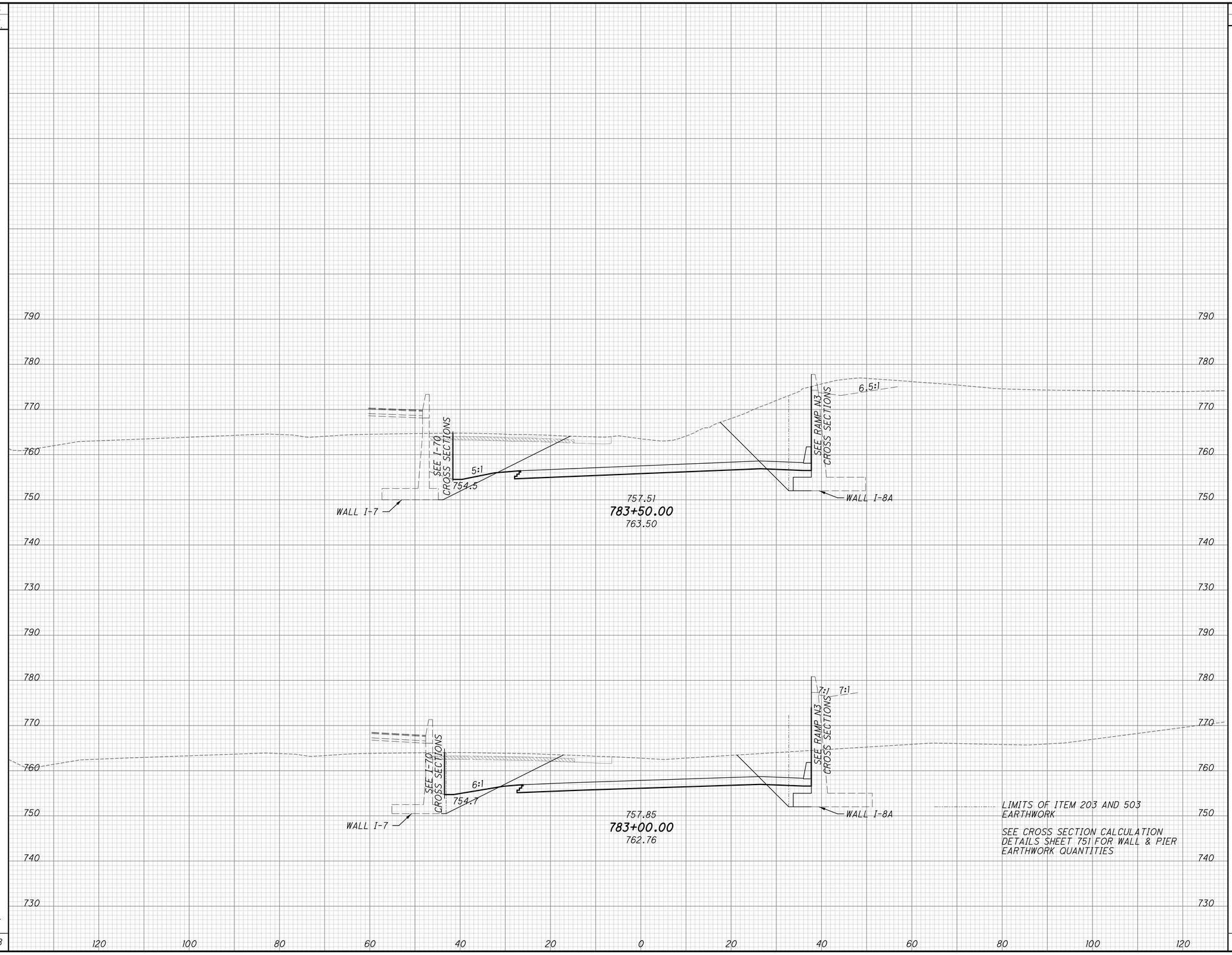

SEEDING END WIDTH	SEEDING SQ. YDS.	END AREA CUT	END AREA FILL	VOLUME CUT	VOLUME FILL
15		727	28		
	91			1201	59
18		570	36		
	67			746	27
	158			1947	86

CALCULATED MAH
CHECKED BSB

CROSS SECTIONS RAMP N4
STA. 783+00.00 TO STA. 783+50.00

FRA-70-14.54

922
2317

PLOT.CEL
ms consultants, inc.
msconsultants.com
www.msconsultants.com
Ohio DOT Workspace
70\71 East Interchange 2E
Batchplot Spec: \\msconsultants.com\files\production\03\60\06634_2E\standards\plotdrv\batchplt.spc
Pen Table: \\msconsultants.com\files\Standards\ustn\ohdot\V8i\ms\plotting\pen\V8i_ms_std.tbl
Plot Driver: \\msconsultants.com\files\Standards\ustn\ohdot\v8i\ms\plotting\PDF.pltcfg
34" x 22"
View: FENCE_VIEW1
By: jdouglas
Model: Sheet
Printed: 6/19/2018 @ 8:57:00 AM
File: N:\03\60\06634_2E\roadway\sheets\105322XS1228.dgn
ms consultants, inc.

PLOT.CEL

ms consultants, inc.
msconsultants.com

www.msconsultants.com

Ohio DOT Workspace
70\71 East Interchange 2E

1" 0 0.5"

Batchplot Spec: \\msconsultants.com\files\production\03\60\06634_2E\standards\plotdrv\batchplt.spc
Pen Table: \\msconsultants.com\files\Standards\ustn\ohdot\V8i\ms\plotting\pen\V8i_ms_std.tbl
Plot Driver: \\msconsultants.com\files\Standards\ustn\ohdot\v8i\ms\plotting\PDF.pltcfg

CF: ohdotV8i
DCF: 60-06634_2E_Columbus

34" x 22"

View: FENCE_VIEW1
By: jdougos

Model: Sheet @ 8:57:01 AM
Printed: 6/19/2018
File: N:\03\60\06634_2E\roadway\sheets\105327XS1229.dgn

SEEDING	
END WIDTH	SQ. YDS.
14	75
	80
13	
	155

END AREA		VOLUME	
CUT	FILL	CUT	FILL
868	27		
787	26		
		1532	49
		1402	50
		2934	99

CALCULATED MAH
CHECKED BSB

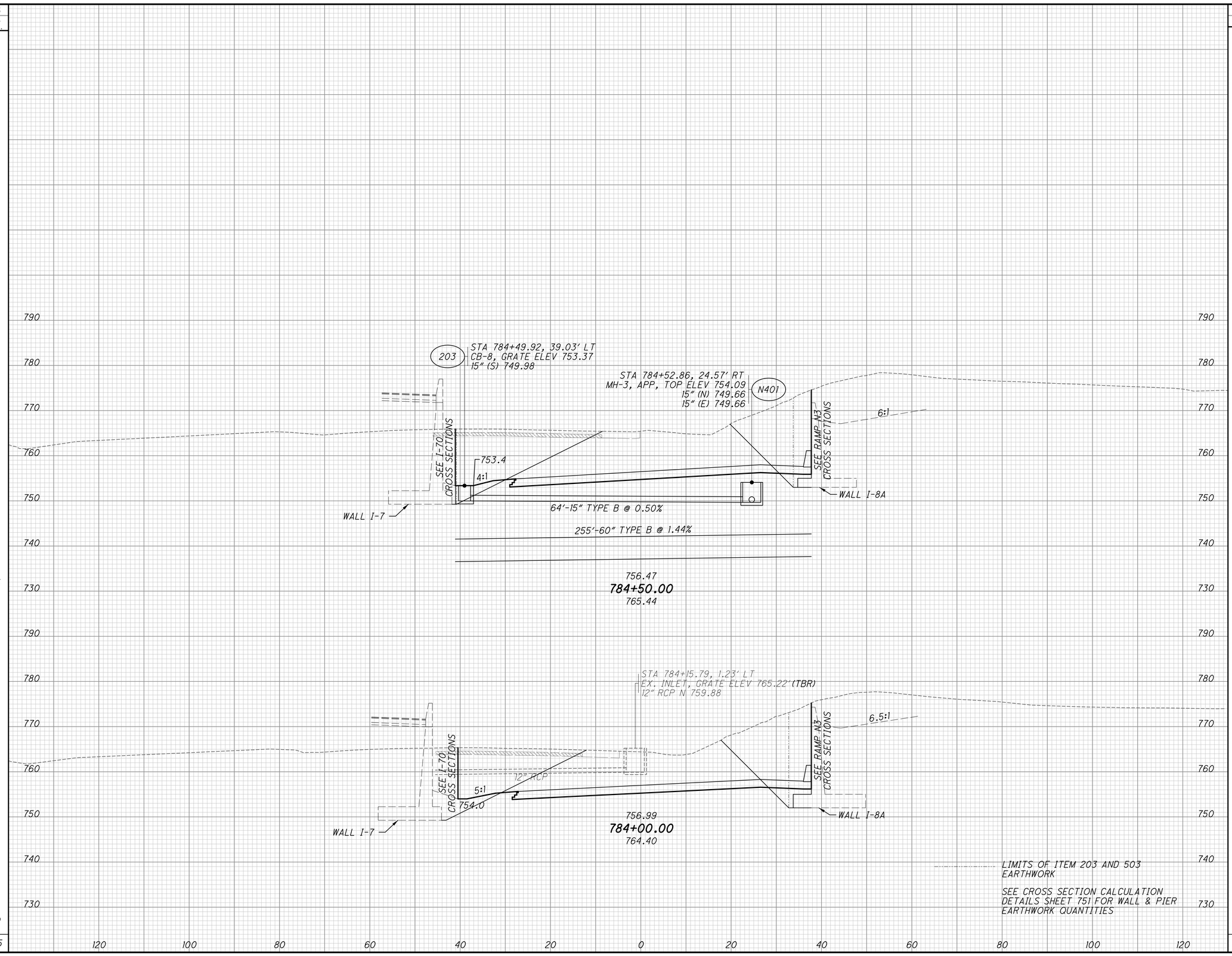

CROSS SECTIONS RAMP N4
STA. 784+00.00 TO STA. 784+50.00

FRA-70-14.54

923
2317

ms consultants, inc.

PLOT.CEL

ms consultants, inc.
msconsultants.com

www.msconsultants.com

Ohio DOT Workspace
70\71 East Interchange 2E

1" 0.5" 0

PCF: ohdot\V8i
PCF: 60-06634_2E_Columbus

Batchplot Spec: \\msconsultants.com\files\production\03\60\06634_2E\standards\plotdir\batchplt.spc
Pen Table: \\msconsultants.com\files\Standards\ustn\ohdot\V8i\ms\plotting\pen\V8i_ms_std.tbl
Plot Driver: \\msconsultants.com\files\Standards\ustn\ohdot\v8i\ms\plotting\PDF.pltcfg

Model: Sheet
Printed: 6/19/2018 @ 8:57:02 AM
File: N:\03\60\06634_2E\roadway\Sheets\105322XS1230.dgn

View: FENCE_VIEW1
By: jdouglas

34" x 22"

SEEDING	
END WIDTH	SQ. YDS.
0	0
11	31
10	10
64	90

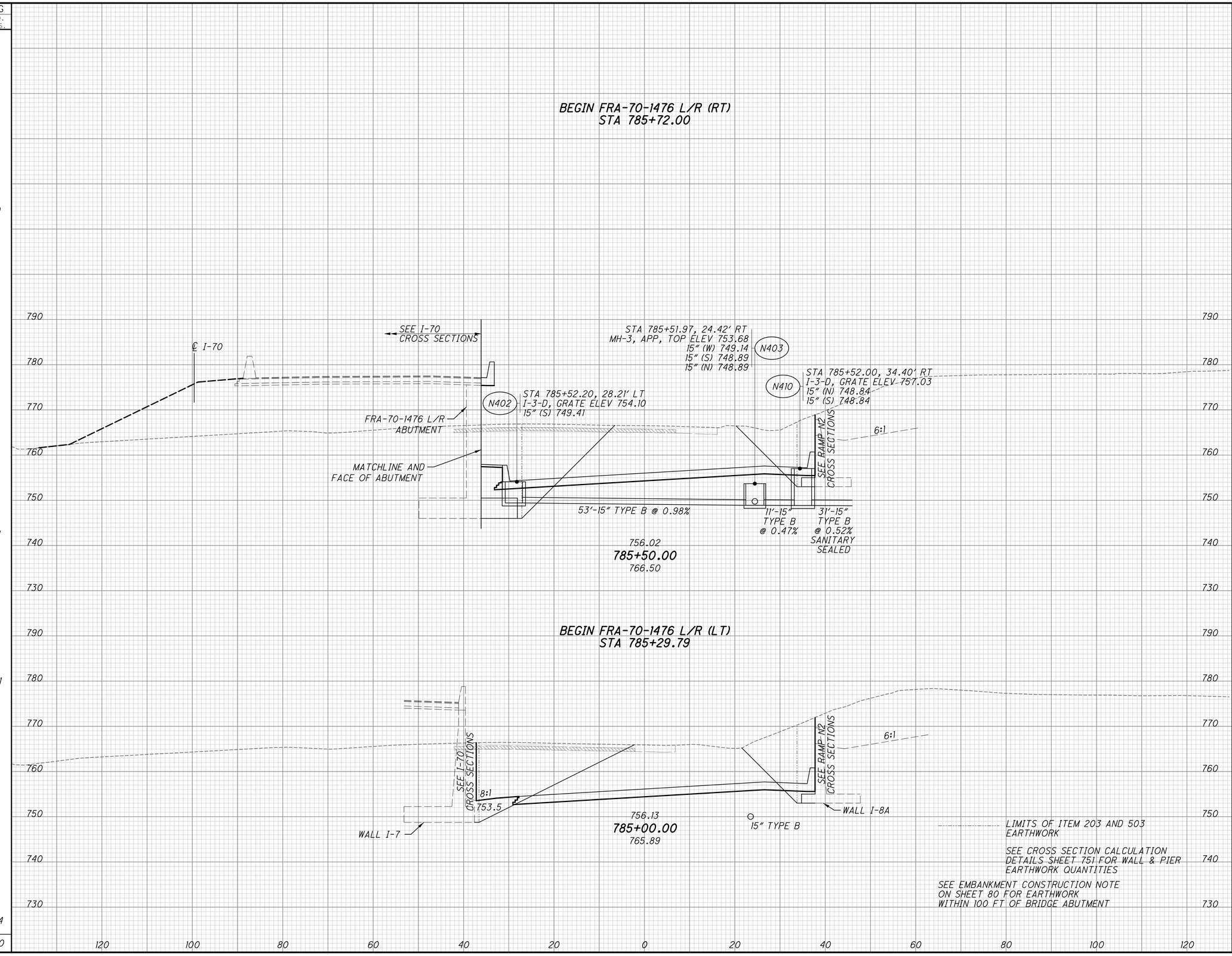

END AREA		VOLUME		
CUT	FILL	CUT	FILL	
719	0	AH		
310	0	BK		
		253	0	
310	0			
		232	0	
310	0	AH		
839	31	BK		
		926	34	
839	31			
		1581	53	
		2992	87	

CALCULATED MAH
CHECKED BSB

CROSS SECTIONS RAMP N4
STA. 785+00.00 TO STA. 785+50.00

FRA-70-14.54

924
2317

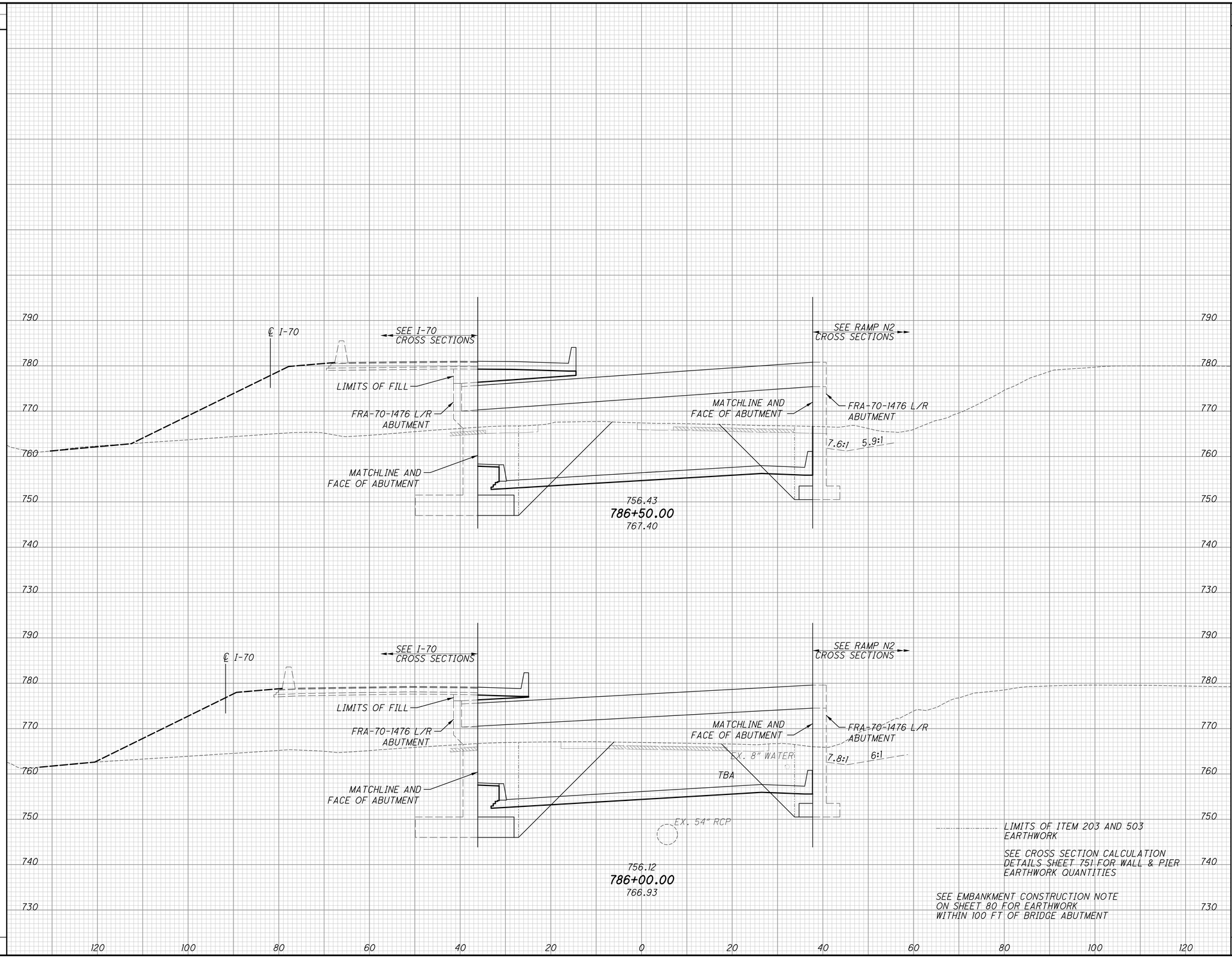

SEEDING END WIDTH	SEEDING SQ. YDS.	END AREA CUT	END AREA FILL	VOLUME CUT	VOLUME FILL
0		769	0		
	0			1378	0
0		719	0		
	0			745	0
	0			2123	0

CALCULATED MAH
CHECKED BSB

CROSS SECTIONS RAMP N4
STA. 786+00.00 TO STA. 786+50.00

FRA-70-14.54

925
2317

ms consultants, inc.

PLOT.CEL

ms consultants, inc.
msconsultants.com

Ohio DOT Workspace
70\71 East Interchange 2E
www.msconsultants.com

Batchplot Spec: \\msconsultants.com\files\production\03\60\06634_2E\standards\plotdrv\batchplt.spc
Pen Table: \\msconsultants.com\files\Standards\ustn\ohdot\V8i\ms\plotting\pen\V8i_ms_std.tbl
Plot Driver: \\msconsultants.com\files\Standards\ustn\ohdot\v8i\ms\plotting\PDF.pltcfg

34" x 22"

View: FENCE_VIEW1
By: jdouglas
Model: Sheet
Printed: 6/19/2018 @ 8:57:03 AM
File: N:\03\60\06634_2E\roadway\sheets\105322XS1231.dgn

PLOT.CEL

ms consultants, inc.
msconsultants.com

www.msconsultants.com

Ohio DOT Workspace
70\71 East Interchange 2E

1" 0.5" 0

Batchplot Spec: \\msconsultants.com\files\production\03\60\06634_2E\standards\plotdrv\batchplt.spc
Pen Table: \\msconsultants.com\files\Standards\astm\ohdot\V8i\ms\plotting\pen\V8i_ms_std.tbl
Plot Driver: \\msconsultants.com\files\Standards\astm\ohdot\v8i\ms\plotting\PDF.pltcfg

Model: Sheet View: FENCE_VIEW1
Printed: 6/19/2018 @ 8:57:05 AM By: jdoughas
File: N:\03\60\06634_2E\roadway\sheets\105322\51232.dgn

34" x 22"

SEEDING	
END WIDTH	SQ. YDS.
87	
	242
0	
	0
	242

END AREA		VOLUME	
CUT	FILL	CUT	FILL
899	0		
1494	0		
714	0		
1373	0		
2867	0		

CALCULATED MAH
CHECKED BSB

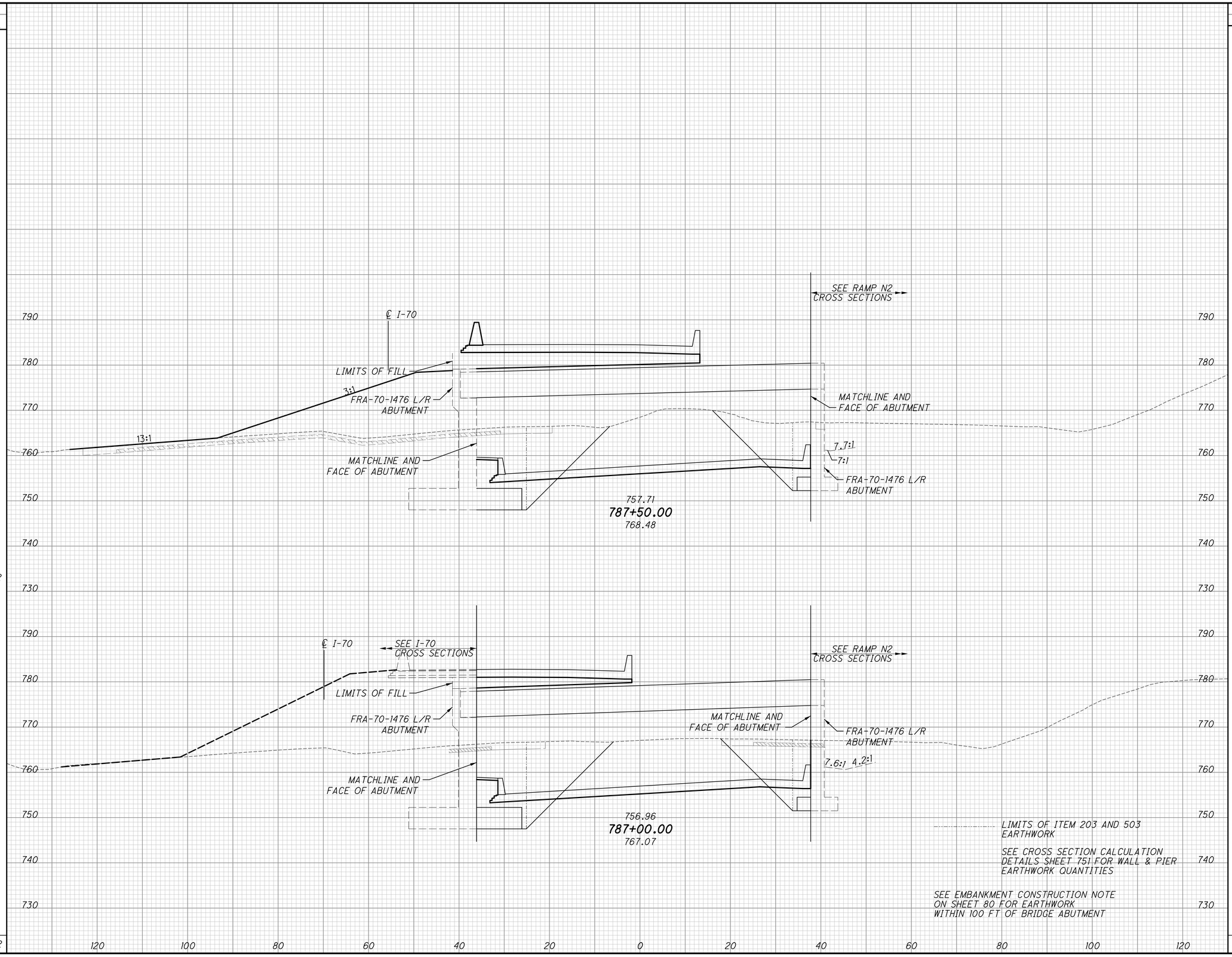

CROSS SECTIONS RAMP N4
STA. 787+00.00 TO STA. 787+50.00

FRA-70-14.54

926
2317

ms consultants, inc.

PLOT.CEL

ms consultants, inc.
msconsultants.com

www.msconsultants.com

Ohio DOT Workspace
70\71 East Interchange 2E

0 0.5" 1"

Batchplot Spec: \\msconsultants.com\files\production\03\60\06634_2E\standards\plotdrv\batchplt.spc
Pen Table: \\msconsultants.com\files\Standards\usth\ohdot\V8i\ms\plotting\pen\V8i_ms_std.tbl PCF: ohdotV8i
Plot Driver: \\msconsultants.com\files\Standards\usth\ohdot\V8i\ms\plotting\PDF.pltcfg PCF: 60-06634_2E_Columbus

Model: Sheet Date: 6/19/2018 @ 8:57:06 AM View: FENCE_VIEW1
Printed: By: jdouglas
File: N:\03\60\06634_2E\roadway\sheets\105322X51233.dgn

34" x 22"

SEEDING	
END WIDTH	SQ. YDS.
100	524
89	488
	1012

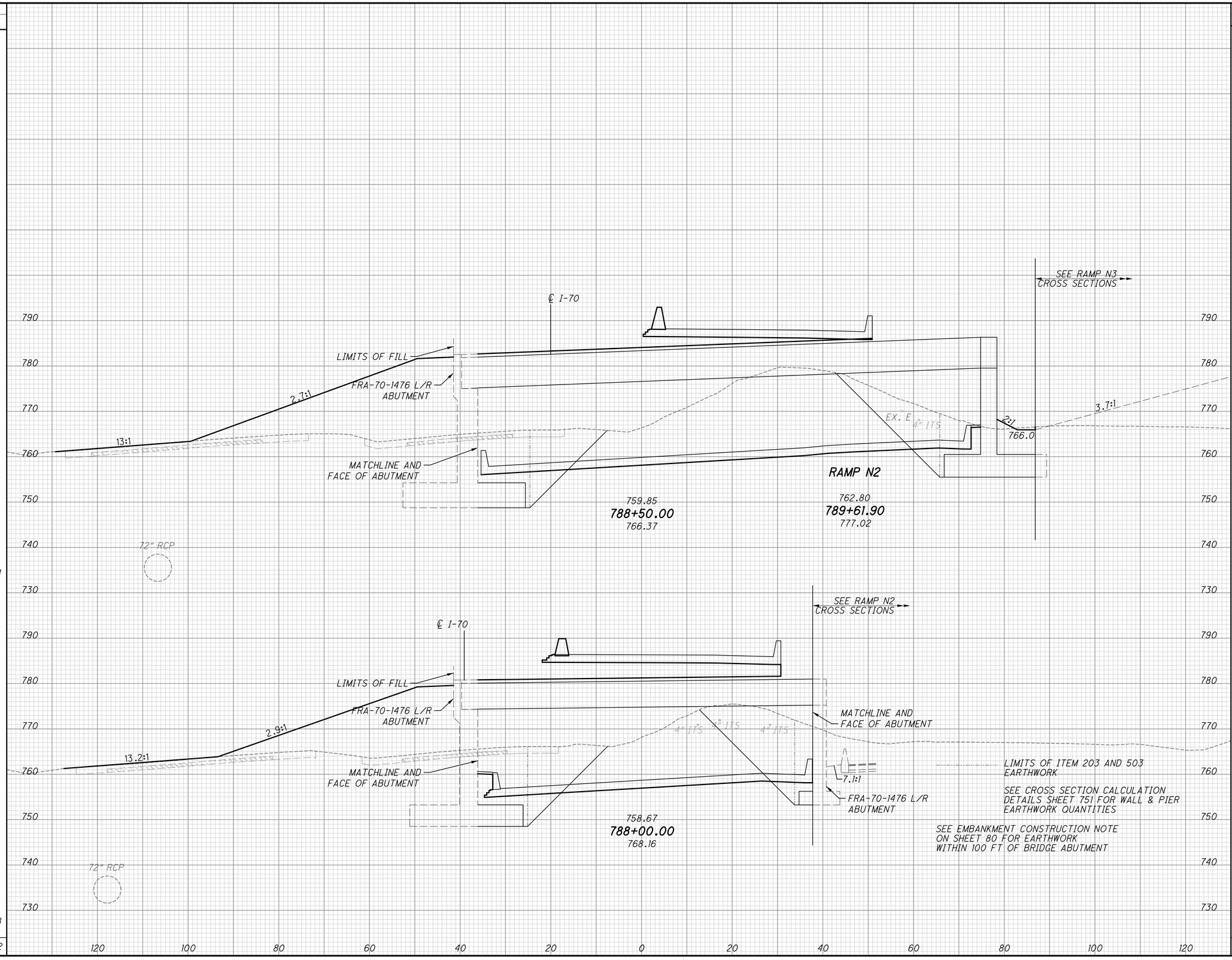

LIMITS OF ITEM 203 AND 503 EARTHWORK

SEE CROSS SECTION CALCULATION DETAILS SHEET 751 FOR WALL & PIER EARTHWORK QUANTITIES

SEE EMBANKMENT CONSTRUCTION NOTE ON SHEET 80 FOR EARTHWORK WITHIN 100 FT OF BRIDGE ABUTMENT

END AREA		VOLUME	
CUT	FILL	CUT	FILL
1395	0		
2203	0		
984	0		
1744	0		
3947	0		

CALCULATED MAH
CHECKED BSB

CROSS SECTIONS RAMP N4
STA. 788+00.00 TO STA. 788+50.00

FRA-70-14.54

927
2317

PLOT.CEL

ms consultants, inc.
msconsultants.com

www.msconsultants.com

Ohio DOT Workspace
70\71 East Interchange 2E

1" 0 0.5"

Batchplot Spec: \\msconsultants.com\files\production\03\60\06634.2E\standards\plotdrv\batchplt.spc
Pen Table: \\msconsultants.com\files\Standards\ustn\ohdot\V8i\ms\plotting\pen\V8i_ms_std.tbl
Plot Driver: \\msconsultants.com\files\Standards\ustn\ohdot\v8i\ms\plotting\PDF.pltcfg

Model: Sheet
Printed: 6/19/2018 @ 8:57:07 AM
File: N:\03\60\06634.2E\roadway\sheets\D0522XS1234.dgn

View: FENCE_VIEW1
By: jdouglas

34" x 22"

SEEDING	
END WIDTH	SQ. YDS.
98	
95	
537	
542	
1079	

LIMITS OF ITEM 203 AND 503 EARTHWORK

SEE CROSS SECTION CALCULATION DETAILS SHEET 751 FOR WALL & PIER EARTHWORK QUANTITIES

SEE EMBANKMENT CONSTRUCTION NOTE ON SHEET 80 FOR EARTHWORK WITHIN 100 FT OF BRIDGE ABUTMENT

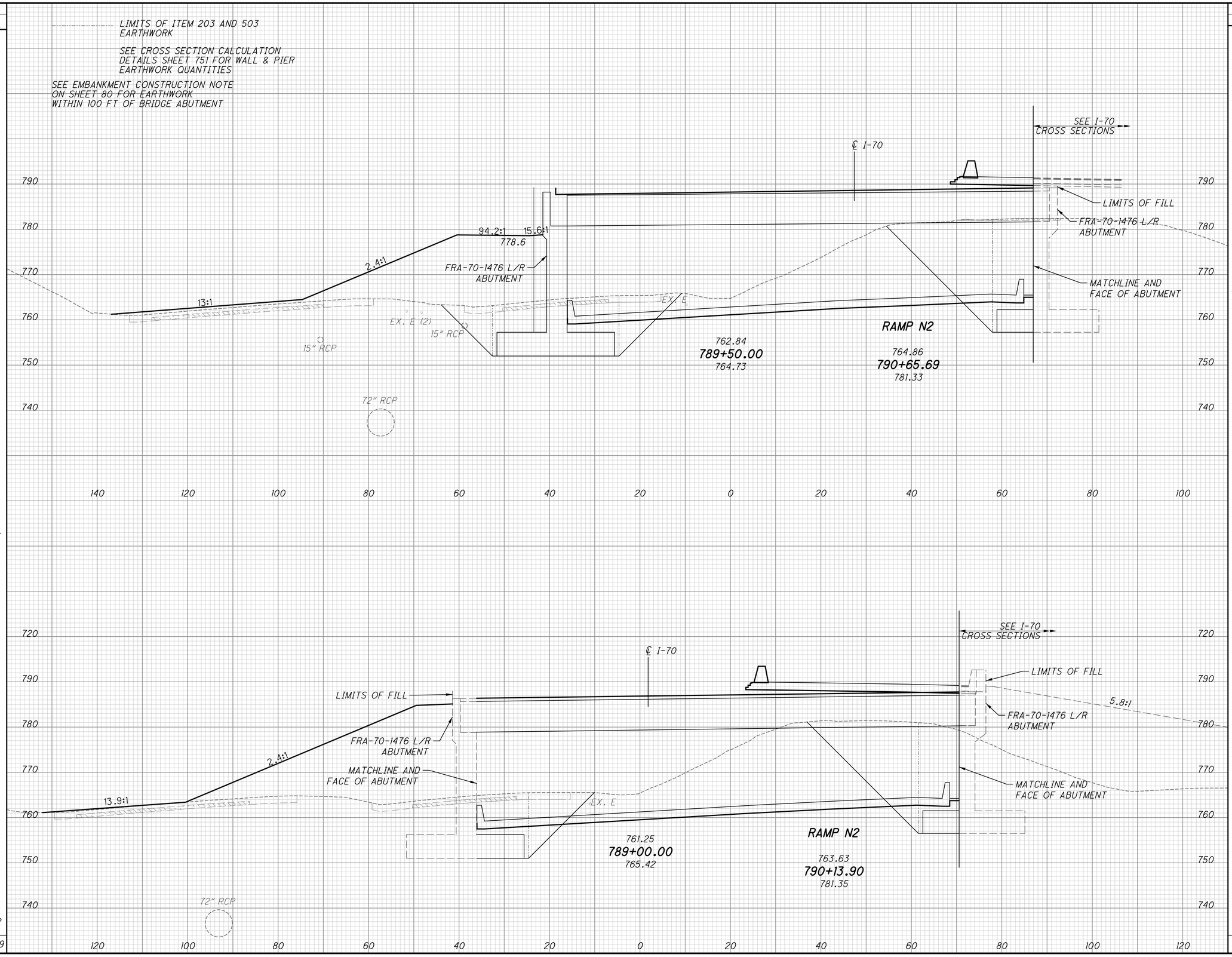

END AREA		VOLUME	
CUT	FILL	CUT	FILL
1080	0		
2206	0		
1302	0		
2498	0		
4704	0		

CALCULATED MAH
CHECKED BSB

CROSS SECTIONS RAMP N4
STA. 789+00.00 TO STA. 789+50.00

FRA-70-14.54

928
2317

PLOT.CEL

ms consultants, inc.
msconsultants.com

www.msconsultants.com

Ohio DOT Workspace
70\71 East Interchange 2E

1"
0.5"
0

34" x 22"

Batchplot Spec: \\msconsultants.com\files\production\03\60\06634_2E\standards\plotdrv\batchplt.spc
Pen Table: \\msconsultants.com\files\Standards\ustn\ohdot\V8i\ms\plotting\pen\V8i_ms_std.tbl
Plot Driver: \\msconsultants.com\files\Standards\ustn\ohdot\v8i\ms\plotting\PDF.pltcfg
PDF: ohdotV8i
PCF: 60-06634_2E_Columbus

Model: Sheet
Printed: 6/19/2018 @ 8:57:08 AM
File: N:\03\60\06634_2E\roadway\sheets\105322X9235.dgn
View FENCE_VIEW1
By: jdoughas

SEEDING	
END WIDTH	SQ. YDS.
83	
	403
	403

LIMITS OF ITEM 203 AND 503 EARTHWORK

SEE CROSS SECTION CALCULATION DETAILS SHEET 751 FOR WALL & PIER EARTHWORK QUANTITIES

SEE EMBANKMENT CONSTRUCTION NOTE ON SHEET 80 FOR EARTHWORK WITHIN 100 FT OF BRIDGE ABUTMENT

- APPROXIMATE LOCATION OF CONSTRUCTION DEBRIS TO BE REMOVED, SEE GENERAL NOTES SHEET 83 FOR DETAILS

STA 689+81.38, 45.97' LT
MH-3, RIM ELEV 764.04
15" (NW) 757.14
EX. 12" RCP NE 757.14
(TBR)EX. 12" RCP W 757.59
(TBR)EX. 15" RCP S 757.14
T561

(RTG)EX. MH 8804
EX. TOP OF CASTING 763.49
STA RAMP N4 789+78.66, 67.18' LT
PROP. TOP OF CASTING 766.01
(TBR)EX. 15" RCP SE 757.09
EX. 18" RCP NE 752.67
EX. 15" RCP W 754.74
EX. 60" RCP NE 735.19
EX. 72" RCP SW 734.37
15" (SE) 757.00
8804

SEE I-70 CROSS SECTIONS

LIMITS OF FILL

FRA-70-1476 L/R ABUTMENT

FRA-70-1476 L/R ABUTMENT

MATCHLINE AND FACE OF ABUTMENT

17:1

10.7:1

6.8:1

761.8

10'-15" TYPE B @ 1.47%

764.13
789+90.02
764.48

RAMP N2

766.10
791+07.02
780.46

END AREA		VOLUME	
CUT	FILL	CUT	FILL
940	0		
		1497	0
		1497	0

790 780 770 760 750 740 730

120 100 80 60 40 20 0 20 40 60 80 100 120

CALCULATED MAH
CHECKED BSB

CROSS SECTIONS RAMP N4
STA. 789+90.02

FRA-70-14.54

929
2317

PLOT.CEL

ms consultants, inc.
msconsultants.com

www.msconsultants.com

Ohio DOT Workspace
70\71 East Interchange 2E

1" / 0.5" / 0

PDF: ohdot\V8i
PCF: 60-06634_2E_Columbus

Batchplot Spec: \\msconsultants.com\files\production\03\60\06634_2E\standards\plotdr\batchplt.spc
Pen Table: \\msconsultants.com\files\Standards\usth\ohdot\V8i\ms\plotting\pen\V8i_ms_std.tbl
Plot Driver: \\msconsultants.com\files\Standards\usth\ohdot\v8i\ms\plotting\PDF.pltdrg

Model: XS_SHEET_689+89.23_TO_690+50.00 - FENCE_VIEW1
Printed: 6/19/2018 @ 8:57:10 AM By: jdougos
File: N:\03\60\06634_2E\roadway\sheets\10532271XS017.dgn

34" x 22"

SEEDING END WIDTH	SEEDING SQ. YDS.
150	809
141	132
80	0
	941

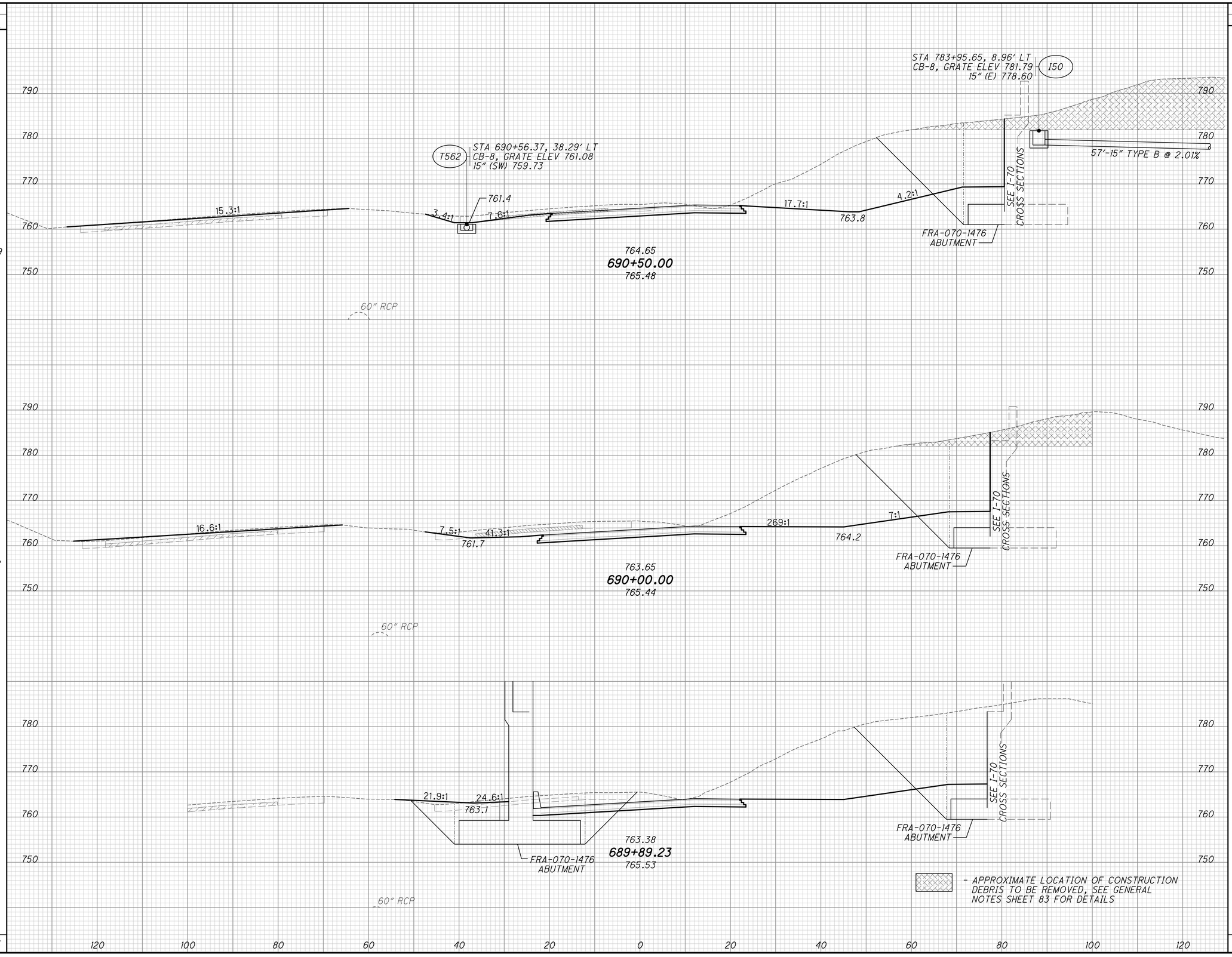

END AREA CUT	END AREA FILL	VOLUME CUT	VOLUME FILL
749	106		
		1481	202
850	112		
		333	43
820	106	0	0
		1814	245

CALCULATED

CHECKED

CROSS SECTIONS TRANS RAMP N4
STA. 689+89.23 TO STA. 690+50.00

FRA-70-14.54

930
2317

ms consultants, inc.

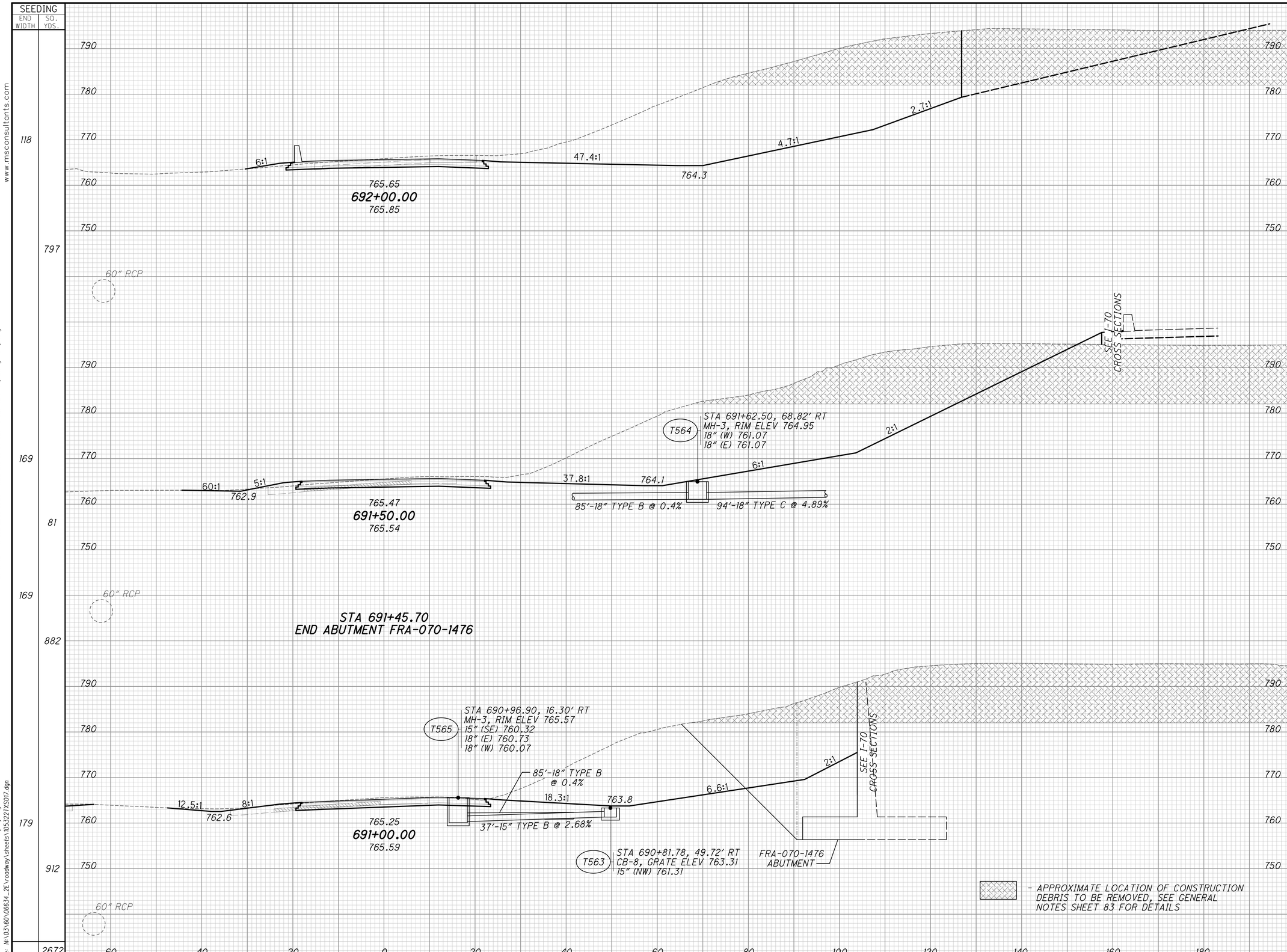

END AREA CUT	END AREA FILL	VOLUME CUT	VOLUME FILL
1071	6		
		1978	258
1065	273		
		170	43
1065	273	AH	
992	167	BK	
		1680	282
992	167		
		1612	252
		5440	835

CALCULATED

CHECKED

CROSS SECTIONS TRANS RAMP N4
STA. 691+00.00 TO STA. 692+00.00

FRA-70-14.54

931
2317

ms consultants, inc.

PLOT.CEL

ms consultants, inc.
msconsultants.com

Ohio DOT Workspace
70\71 East Interchange 2E
www.msconsultants.com

Batchplot Spec: \\msconsultants.com\files\production\03\60\06634_2E\standards\plotdrv\batchplt.spc
Pen Table: \\msconsultants.com\files\Standards\ustn\ohdot\V8i\ms\plotting\pen\V8i_ms_std.tbl
Plot Driver: \\msconsultants.com\files\Standards\ustn\ohdot\v8i\ms\plotting\PDF.pltcfg

34" x 22"

Model: XS_SHEET_691+00.00_TO_692+00.00 Dw: FENCE_VIEW1
Printed: 6/19/2018 @ 8:57:11 AM By: jdouglas
File: N:\03\60\06634_2E\roadway\sheets\1053227XS017.dgn

PLOT.CEL

ms consultants, inc.
msconsultants.com

www.msconsultants.com

Ohio DOT Workspace
70\71 East Interchange 2E

1"
0.5"
0

PDF: ohdot\V8i
PCF: 60-06634_2E_Columbus

Batchplot Spec: \\msconsultants.com\Files\production\03\60\06634_2E\standards\plotdr\batchplt.spc
Pen Table: \\msconsultants.com\Files\Standards\ustn\ohdot\V8i\ms\plotting\pen\V8i_ms_std.tbl
Plot Driver: \\msconsultants.com\Files\Standards\ustn\ohdot\v8i\ms\plotting\PDF.pltcfg

Model: XS_SHEET_692-50.00_TO_693-50.00 - FENCE_VIEW1
Printed: 6/19/2018 @ 8:57:12 AM By: jbougas
File: N:\03\60\06634_2E\roadway\sheets\1053221XS017.dgn

34" x 22"

SEEDING	
END WIDTH	SQ. YDS.
0	
	15
11	
	31
11	
	47
	344
6	
	437

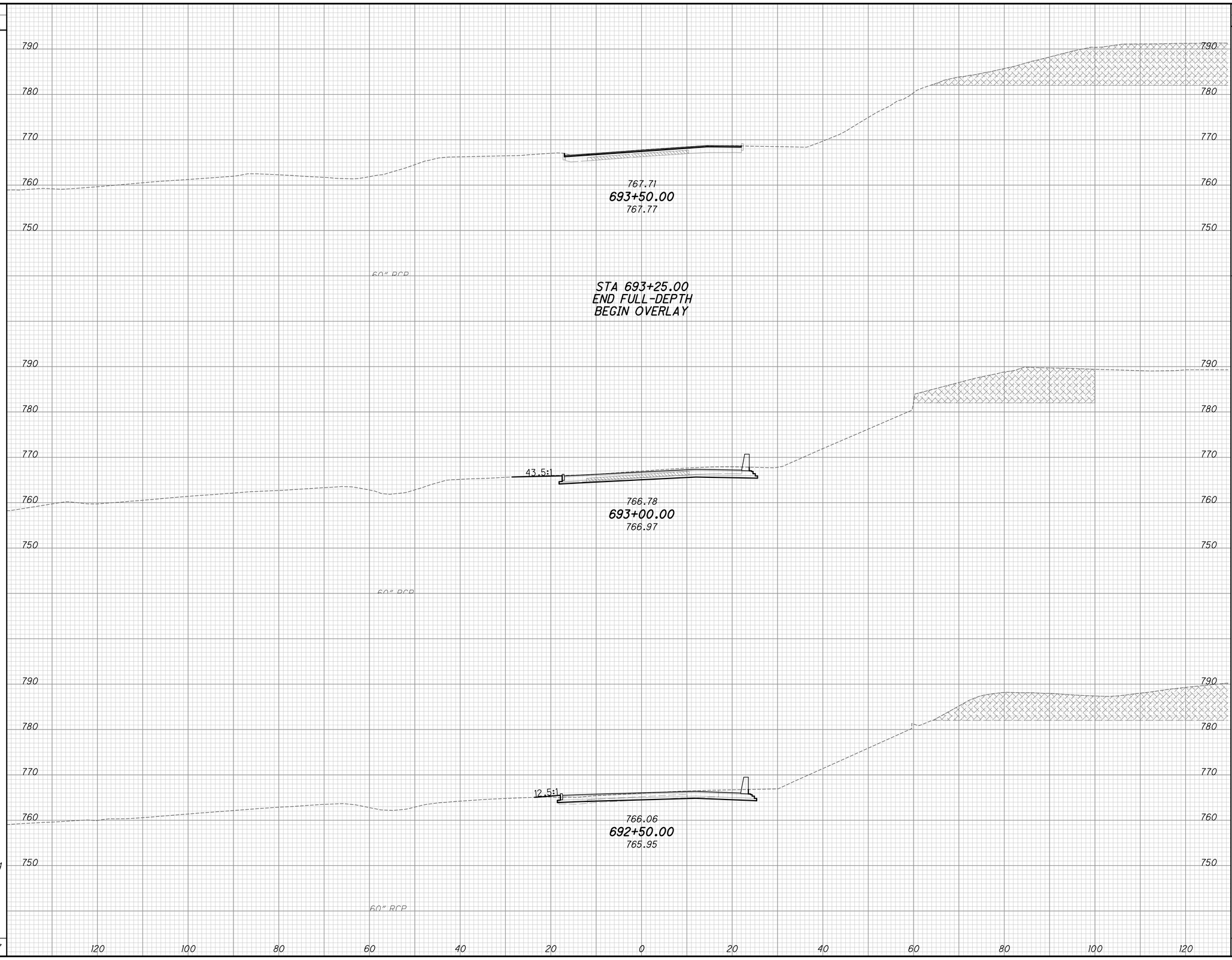

END AREA		VOLUME		
CUT	FILL	CUT	FILL	
11	0			
		10	0	
11	0			AH
72	3			BK
		67	3	
72	3			
		121	12	
58	9			
		1045	14	
		1243	29	

CALCULATED

CHECKED

CROSS SECTIONS TRANS RAMP N4
STA. 692+50.00 TO STA. 693+50.00

FRA-70-14.54

932
2317

ms consultants, inc.

34" x 22"

Model: XS_SHEET_694+00.00_TO_694+18.27
Printed: 6/19/2018 @ 8:57:12 AM By: jdouglas
File: N:\03\60\06634_2E\roadway\sheets\105322TXS017.dgn

Batchplot Spec: \\msconsultants.com\files\production\03\60\06634_2E\standards\plotdrv\batchplt.spc
Pen Table: \\msconsultants.com\files\Standards\ustn\ohdot\V8i\ms\plotting\pen\V8i_ms_std.tbl
Plot Driver: \\msconsultants.com\files\Standards\ustn\ohdot\v8i\ms\plotting\PDF.pltcfg

0 1" 0.5"

PCF: ohdotV8i
PCF: 60-06634_2E_Columbus

Ohio DOT Workspace
70\71 East Interchange 2E

PLOT.CEL

ms consultants, inc.
msconsultants.com

www.msconsultants.com

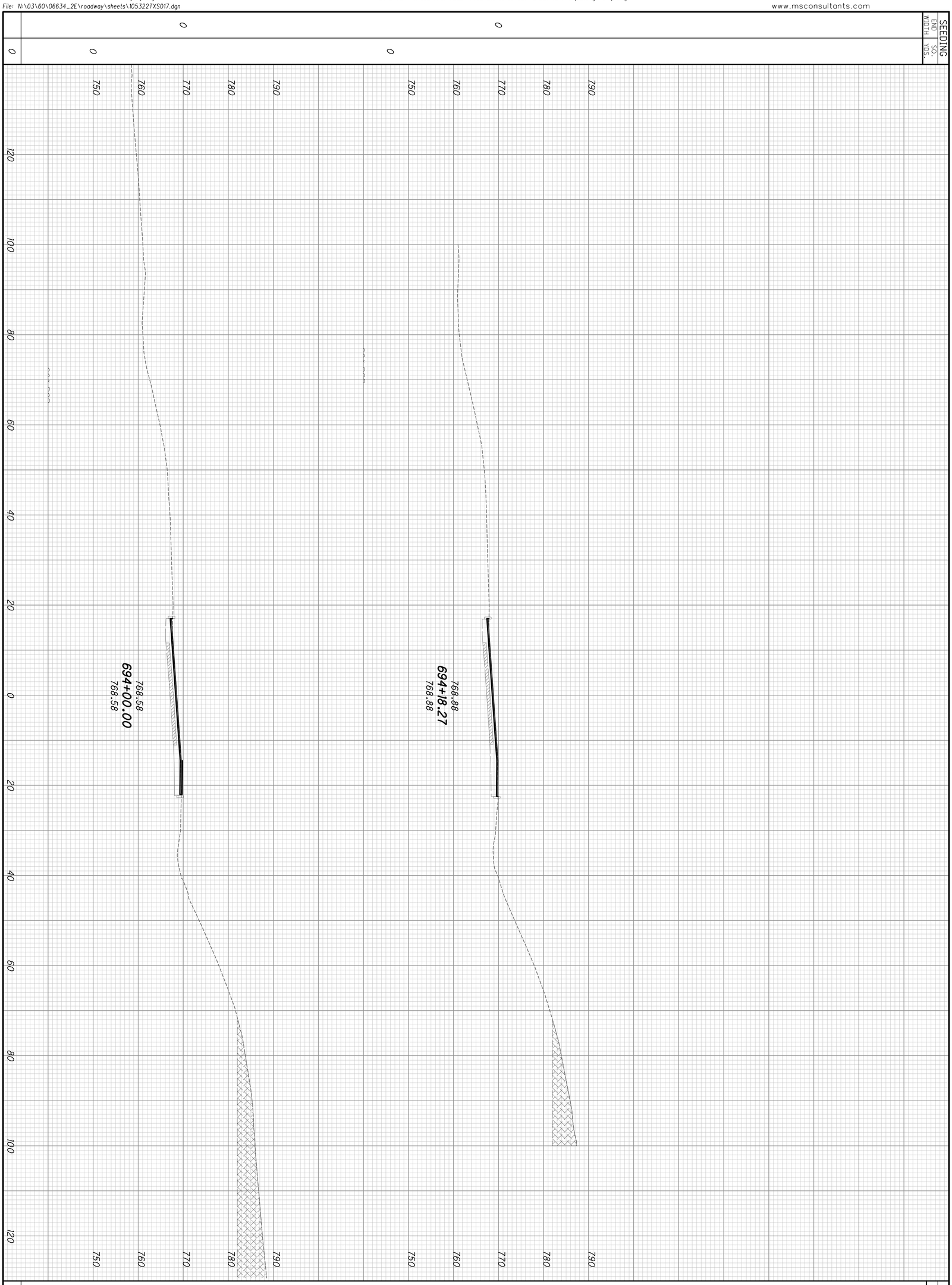

FRA-70-14.54

CROSS SECTIONS TRANS RAMP N4
STA. 694+00.00 TO STA. 694+18.27

CALCULATED

CHECKED

933
2317

ms consultants, inc.

PLOT.CEL

ms consultants, inc.
msconsultants.com

www.msconsultants.com

Ohio DOT Workspace
70\71 East Interchange 2E

1"
0.5"
0

Batchplot Spec: \\msconsultants.com\files\production\Q3\60\06634_2E\standards\plotdrv\batchplt.spc
Pen Table: \\msconsultants.com\files\Standards\usth\ohdot\V8i\ms\plotting\pen\V8i_ms_std_10pct.tbl
Plot Driver: \\msconsultants.com\files\Standards\usth\ohdot\v8i\ms\plotting\PDF.pltcfg
PDF: ohdotV8i
PDF: 60-06634_2E_Columbus

Model: XS_SHEET_888+50.00_TO_889+00.00
Printed: 6/19/2018 @ 8:57:21 AM
File: N:\03\60\06634_2E\roadway\sheets\105322XS058.dgn
Ref: FENCE_VIEW1
By: jdoughas

34" x 22"

SEEDING	
END WIDTH	SQ. YDS.
138	
	723
122	0
	723

END AREA	
CUT	FILL
3387	25
1527	257

VOLUME	
CUT	FILL
4550	261
0	0
4550	261

CALCULATED

CHECKED

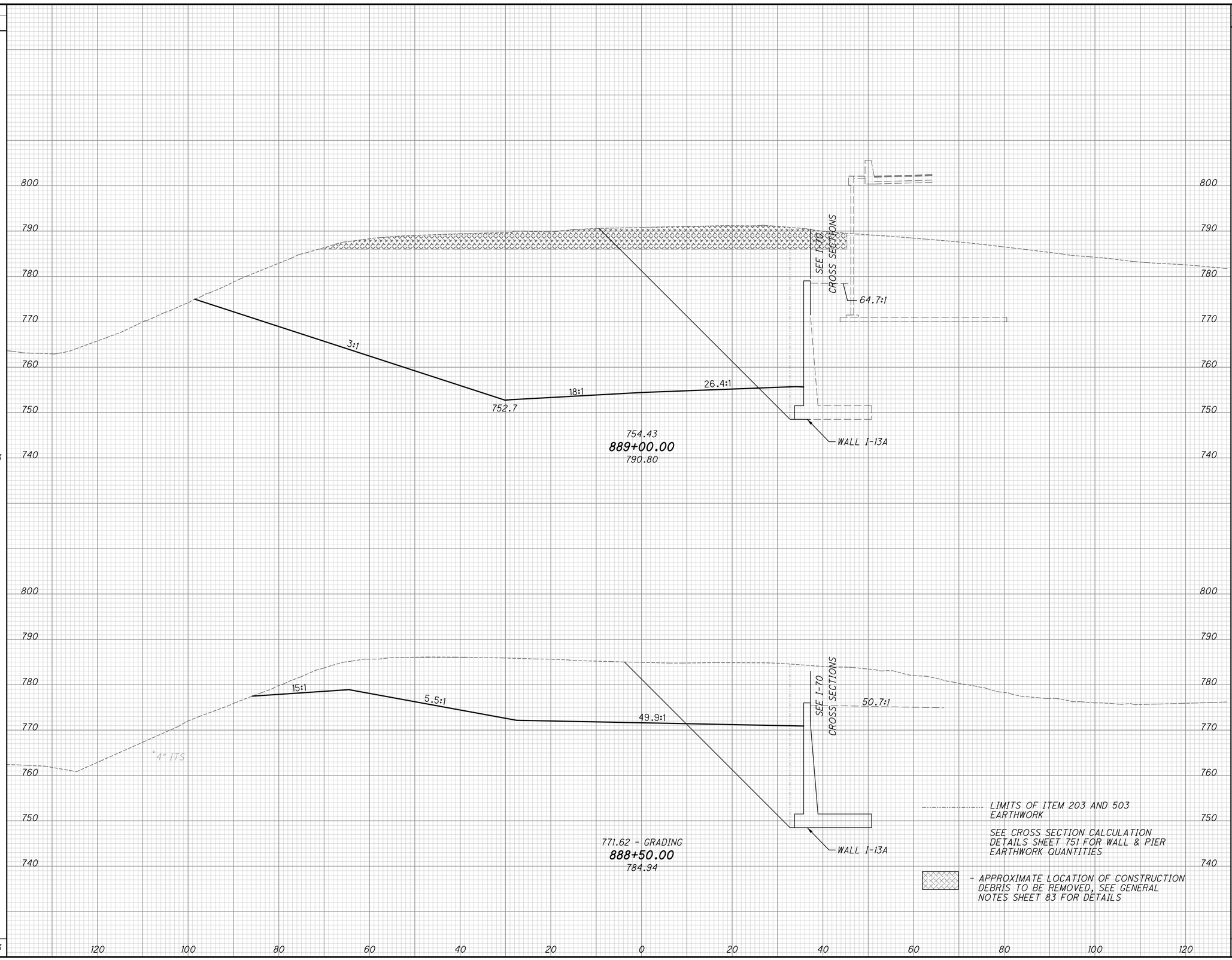

CROSS SECTIONS RAMP Q3
STA. 888+50.00 TO STA. 889+00.00

FRA-70-14.54

934
2317

PLOT.CEL

ms consultants, inc.
msconsultants.com

Ohio DOT Workspace
70\71 East Interchange 2E
www.msconsultants.com

Batchplot Spec: \\msconsultants.com\files\production\03\60\06634_2E\standards\plotdrv\batchplt.spc
Pen Table: \\msconsultants.com\files\Standards\ustn\ohdot\V8i\ms\plotting\pen\V8i_ms_std.tbl
Plot Driver: \\msconsultants.com\files\Standards\ustn\ohdot\v8i\ms\plotting\PDF.pltcfg

34" x 22"

Model: XS_SHEET_889+50.00_TO_890+00.00 Div: FENCE_VIEW1
Printed: 6/19/2018 @ 8:57:22 AM By: jdouglas
File: N:\03\60\06634_2E\roadway\sheets\105322XS058.dgn

SEEDING END WIDTH	SEEDING SQ. YDS.	END AREA CUT	END AREA FILL	VOLUME CUT	VOLUME FILL
64		2486	607		
	321			4764	1163
52		2659	649		
	527			5598	624
	848			10362	1787

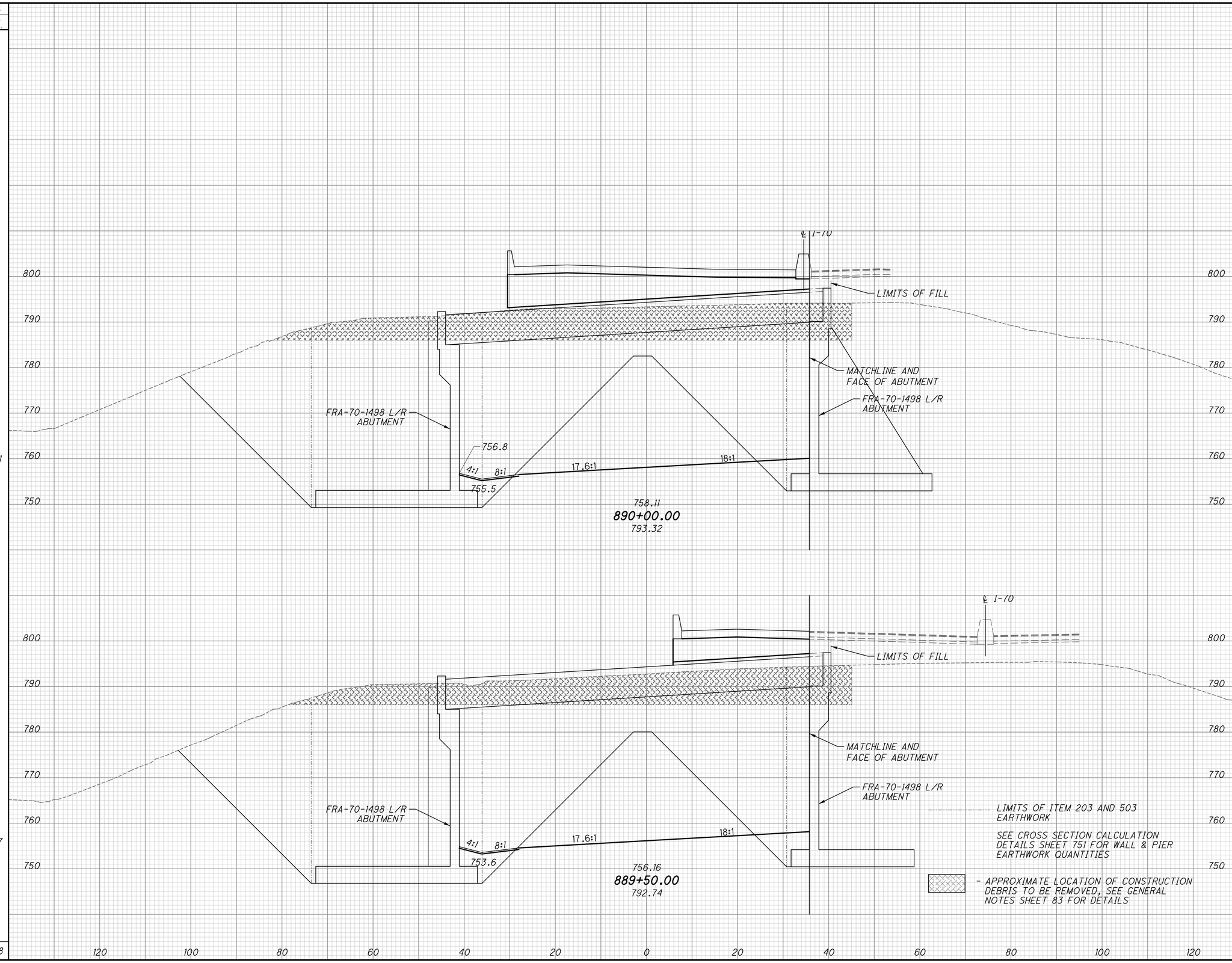

CALCULATED

CHECKED

CROSS SECTIONS RAMP Q3
STA. 889+50.00 TO STA. 890+00.00

FRA-70-14.54

935
2317

ms consultants, inc.

PLOT.CEL

ms consultants, inc.
msconsultants.com

www.msconsultants.com

Ohio DOT Workspace
70\71 East Interchange 2E

0 0.5" 1"

Batchplot Spec: \\msconsultants.com\Files\production\03\60\06634_2E\standards\plotdrv\batchplt.spc
Pen Table: \\msconsultants.com\Files\Standards\ustn\ohdot\V8i\ms\plotting\pen\V8i_ms_std.tbl
Plot Driver: \\msconsultants.com\Files\Standards\ustn\ohdot\v8i\ms\plotting\PDF.pltcfg
PDF: ohdotV8i
PCF: 60-06634_2E_Columbus

34" x 22"

Model: XS_SHEET_890+50.00_TO_891+00.00
Printed: 6/19/2018 @ 8:57:23 AM
File: N:\03\60\06634_2E\roadway\sheets\105322XS058.dgn
Dgn: FENCE_VIEW1
By: jdouglas

SEEDING END WIDTH	SEEDING SQ. YDS.
64	355
64	355
	710

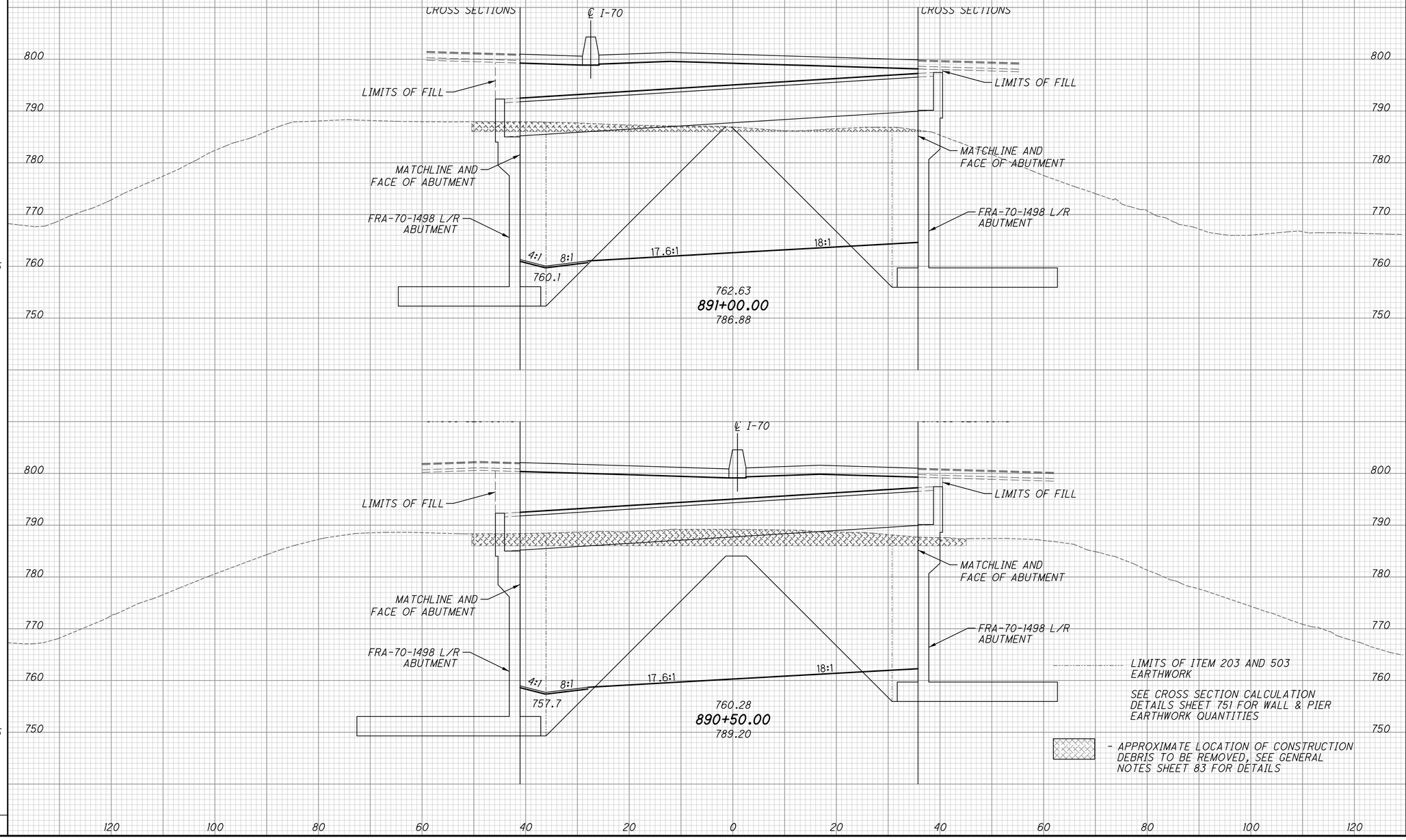

END AREA CUT	END AREA FILL	VOLUME CUT	VOLUME FILL
1642	65	3177	111
1789	55	3959	613
		7136	724

CALCULATED

CHECKED

CROSS SECTIONS RAMP Q3
STA. 890+50.00 TO STA. 891+00.00

FRA-70-14.54

936
2317

ms consultants, inc.

PLOT.CEL

ms consultants, inc.
msconsultants.com

Ohio DOT Workspace
70\71 East Interchange 2E
www.msconsultants.com

Batchplot Spec: \\msconsultants.com\files\production\03\60\06634_2E\standards\plotdrv\batchplt.spec
Pen Table: \\msconsultants.com\files\Standards\ustn\ohdot\V8i\ms\plotting\pen\V8i_ms_std.tbl
Plot Driver: \\msconsultants.com\files\Standards\ustn\ohdot\v8i\ms\plotting\PDF.pltcfg

34" x 22"

Model: XS_SHEET_891+50.00_TO_892+00.00 Dw: FENCE_VIEW1
Printed: 6/19/2018 @ 8:57:23 AM By: jdouglas
File: N:\03\60\06634_2E\roadway\sheets\105322XS058.dgn

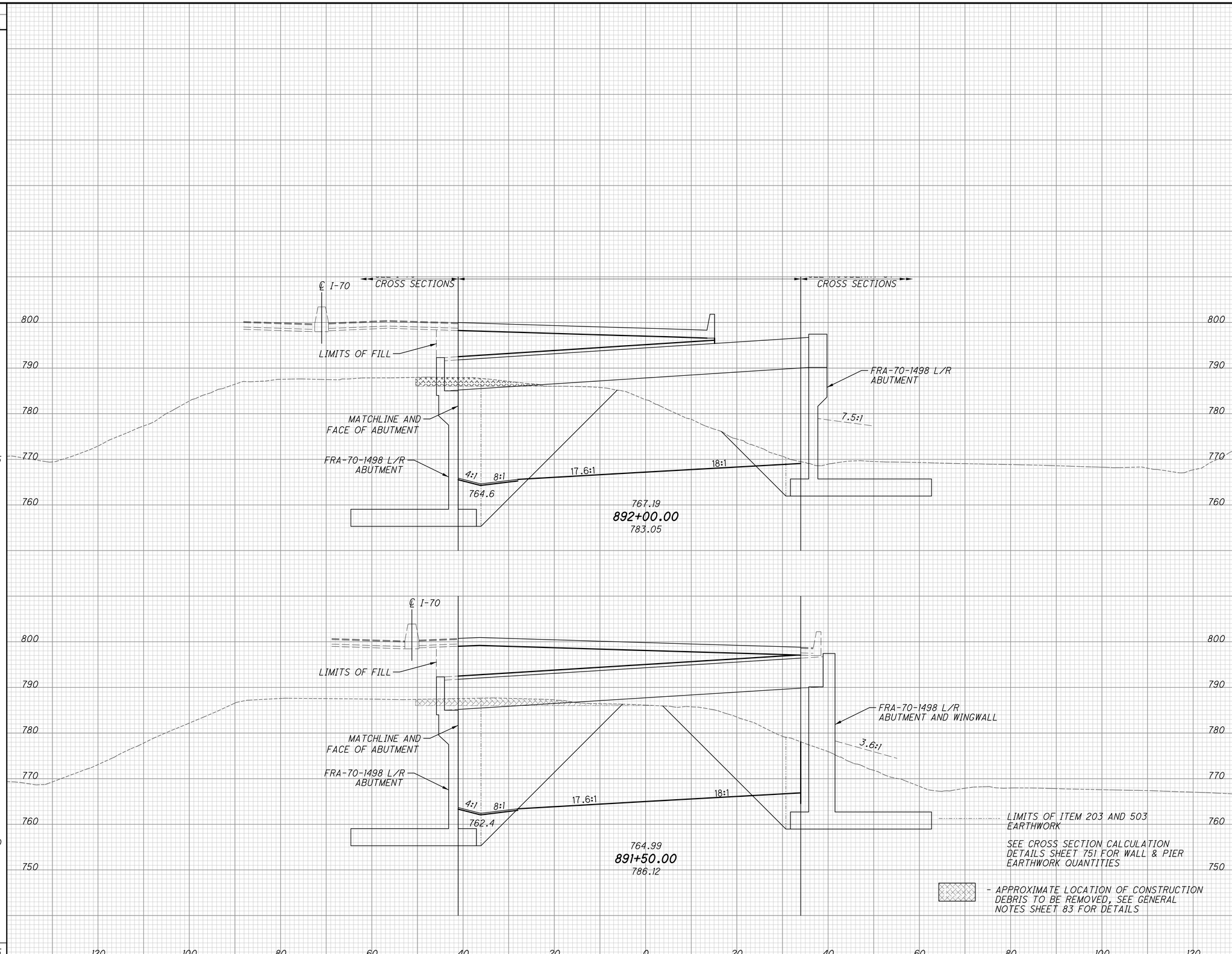

LIMITS OF ITEM 203 AND 503 EARTHWORK

SEE CROSS SECTION CALCULATION DETAILS SHEET 751 FOR WALL & PIER EARTHWORK QUANTITIES

- APPROXIMATE LOCATION OF CONSTRUCTION DEBRIS TO BE REMOVED, SEE GENERAL NOTES SHEET 83 FOR DETAILS

SEEDING END WIDTH	SEEDING SQ. YDS.	END AREA CUT	END AREA FILL	VOLUME CUT	VOLUME FILL
62		1037	69		
	345			2268	115
62		1412	55		
	350			2828	111
	695			5096	226

CALCULATED

CHECKED

CROSS SECTIONS RAMP Q3
STA. 891+50.00 TO STA. 892+00.00

FRA-70-14.54

ms consultants, inc.

PLOT.CEL

ms consultants, inc.
msconsultants.com

www.msconsultants.com

Ohio DOT Workspace
70\71 East Interchange 2E

0 0.5" 1"

34" x 22"

Batchplot Spec: \\msconsultants.com\files\production\03\60\06634_2E\standards\plotdrv\batchplt.spc
Pen Table: \\msconsultants.com\files\Standards\ustn\ohdot\V8i\ms\plotting\pen\V8i_ms_std.tbl PCF: ohdotV8i
Plot Driver: \\msconsultants.com\files\Standards\ustn\ohdot\v8i\ms\plotting\PDF.pltcfg PCF: 60-06634_2E_Columbus

Model: XS_SHEET_892-50.00_TO_893-00.00 FENCE_VIEW1
Printed: 6/19/2018 @ 8:57:24 AM By: jdougas
File: N:\03\60\06634_2E\roadway\sheets\1053225058.dgn

SEEDING	
END WIDTH	SQ. YDS.
62	345
62	345
	690

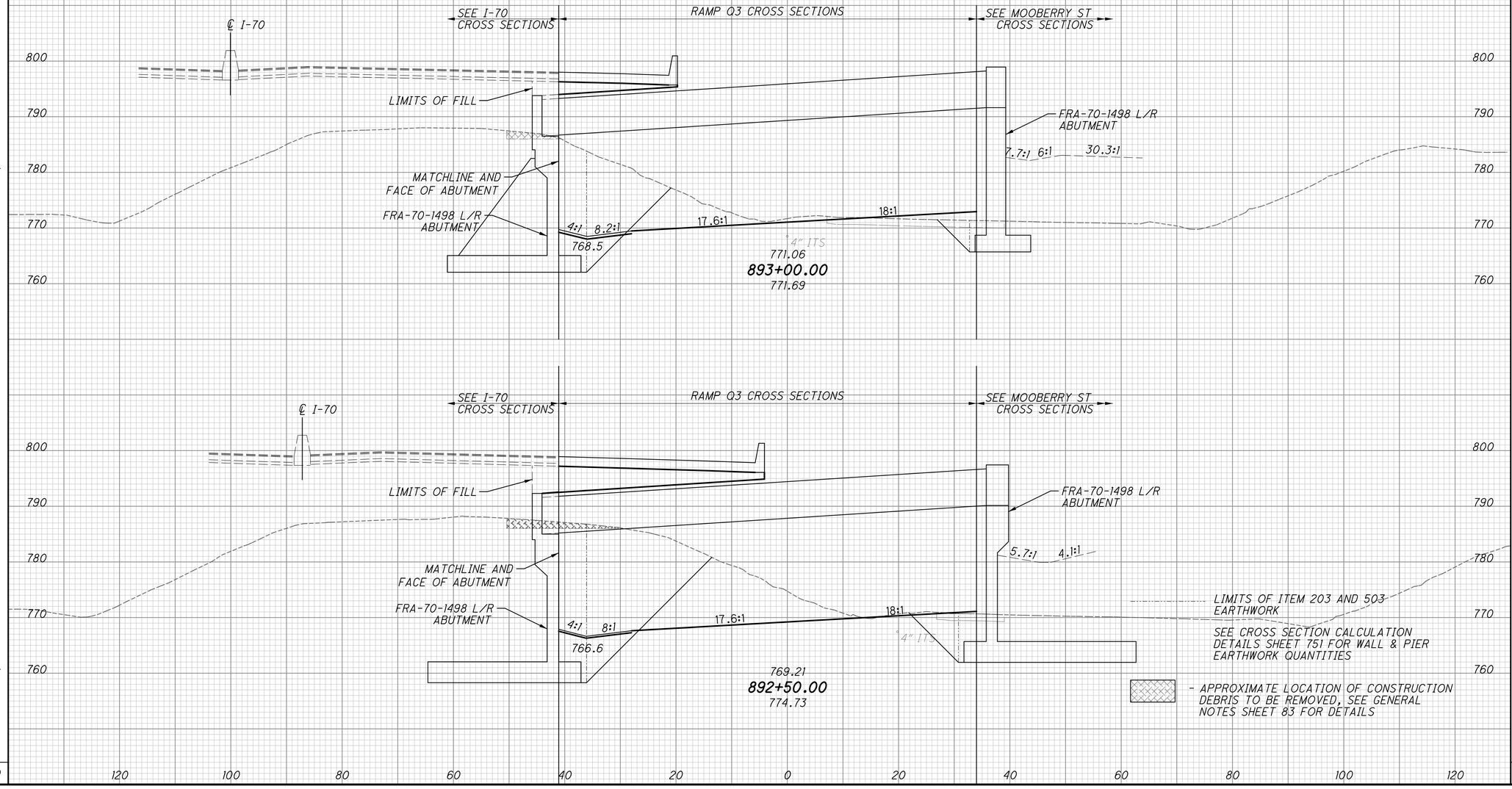

END AREA	
CUT	FILL
302	77
614	76

VOLUME	
CUT	FILL
848	142
1529	135
2377	277

LIMITS OF ITEM 203 AND 503 EARTHWORK

SEE CROSS SECTION CALCULATION DETAILS SHEET 751 FOR WALL & PIER EARTHWORK QUANTITIES

- APPROXIMATE LOCATION OF CONSTRUCTION DEBRIS TO BE REMOVED, SEE GENERAL NOTES SHEET 83 FOR DETAILS

CALCULATED

CHECKED

CROSS SECTIONS RAMP Q3
STA. 892+50.00 TO STA. 893+00.00

FRA-70-14.54

938
2317

PLOT.CEL

ms consultants, inc.
msconsultants.com

Ohio DOT Workspace
70\71 East Interchange 2E
www.msconsultants.com

Batchplot Spec: \\msconsultants.com\files\production\03\60\06634_2E\standards\plotdrv\batchplt.spc
Pen Table: \\msconsultants.com\files\Standards\ustn\ohdot\V8i\ms\plotting\pen\V8i_ms_std.tbl
Plot Driver: \\msconsultants.com\files\Standards\ustn\ohdot\v8i\ms\plotting\PDF.pltcfg

34" x 22"

Model: XS_SHEET_893+50.00_TO_894+00.00 Div: FENCE_VIEW1
Printed: 6/19/2018 @ 8:57:25 AM By: jdouglas
File: N:\03\60\06634_2E\roadway\sheets\105322XS058.dgn

SEEDING END WIDTH	SEEDING SQ. YDS.
64	
	350
62	
	345
	695

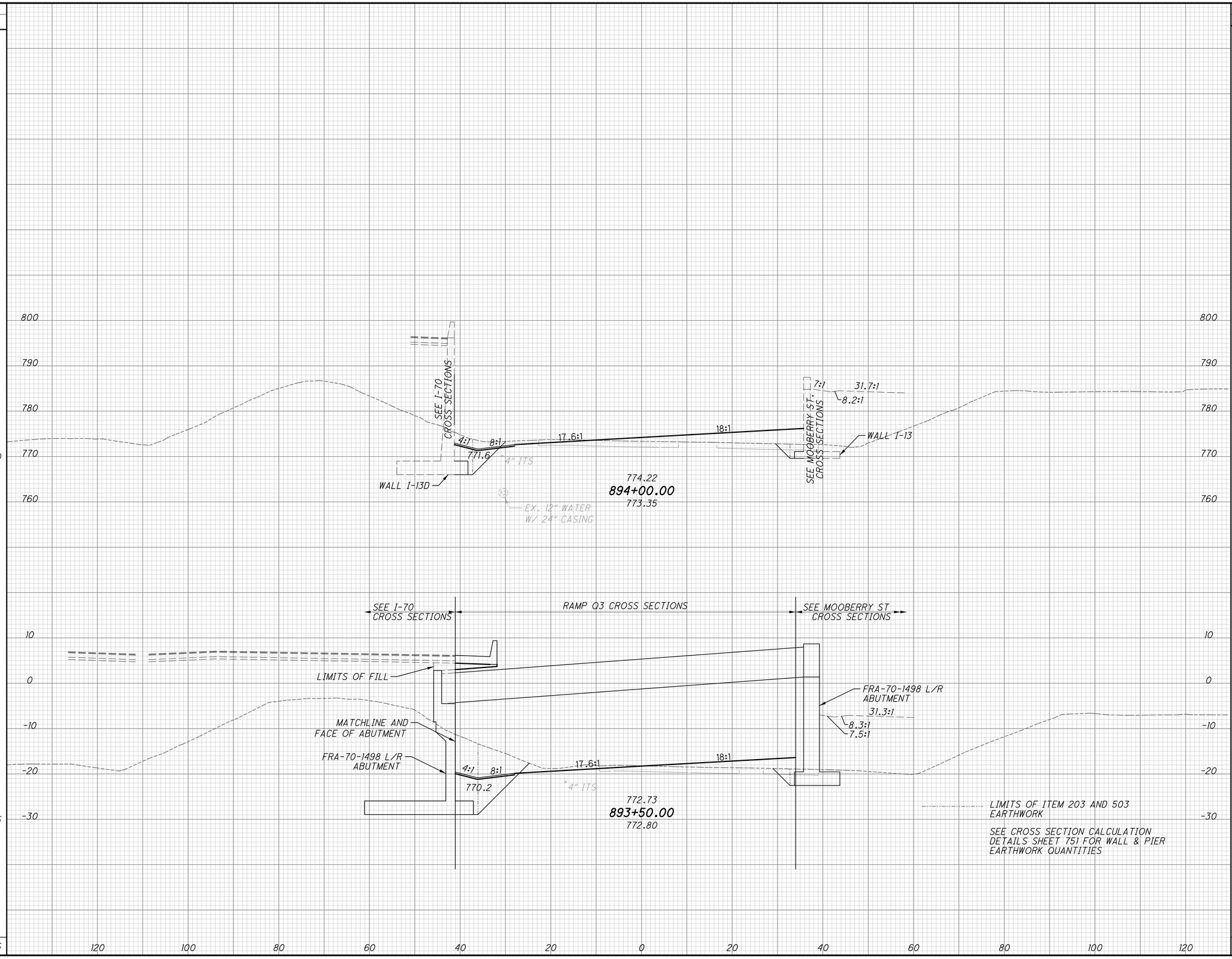

END AREA CUT	END AREA FILL	VOLUME CUT	VOLUME FILL
95	153		
		230	255
153	122		
		422	184
		677	439

CALCULATED

CHECKED

CROSS SECTIONS RAMP Q3
STA. 893+50.00 TO STA. 894+00.00

FRA-70-14.54

939
2317

ms consultants, inc.

PLOT.CEL

ms consultants, inc.
msconsultants.com

www.msconsultants.com

Ohio DOT Workspace
70\71 East Interchange 2E

0 0.5" 1"

Batchplot Spec: \\msconsultants.com\files\production\03\60\06634_2E\standards\plotdrv\batchplt.spec
Pen Table: \\msconsultants.com\files\Standards\usth\ohdot\V8i\ms\plotting\pen\V8i_ms_std.tbl PCF: ohdotV8i
Plot Driver: \\msconsultants.com\files\Standards\usth\ohdot\v8i\ms\plotting\PDF.pltcfg PCF: 60-06634_2E_Columbus

Model: XS_SHEET_894+50.00_TO_895+00.00 - FENCE_VIEW1
Printed: 6/19/2018 @ 8:57:26 AM By: jdougas
File: N:\03\60\06634_2E\roadway\sheets\105322XS058.dgn

34" x 22"

SEEDING END WIDTH	SEEDING SQ. YDS.	STA	END AREA CUT	END AREA FILL	VOLUME CUT	VOLUME FILL
90	483	800	108	274	204	471
84	412	800	112	235	192	360
	895				396	831

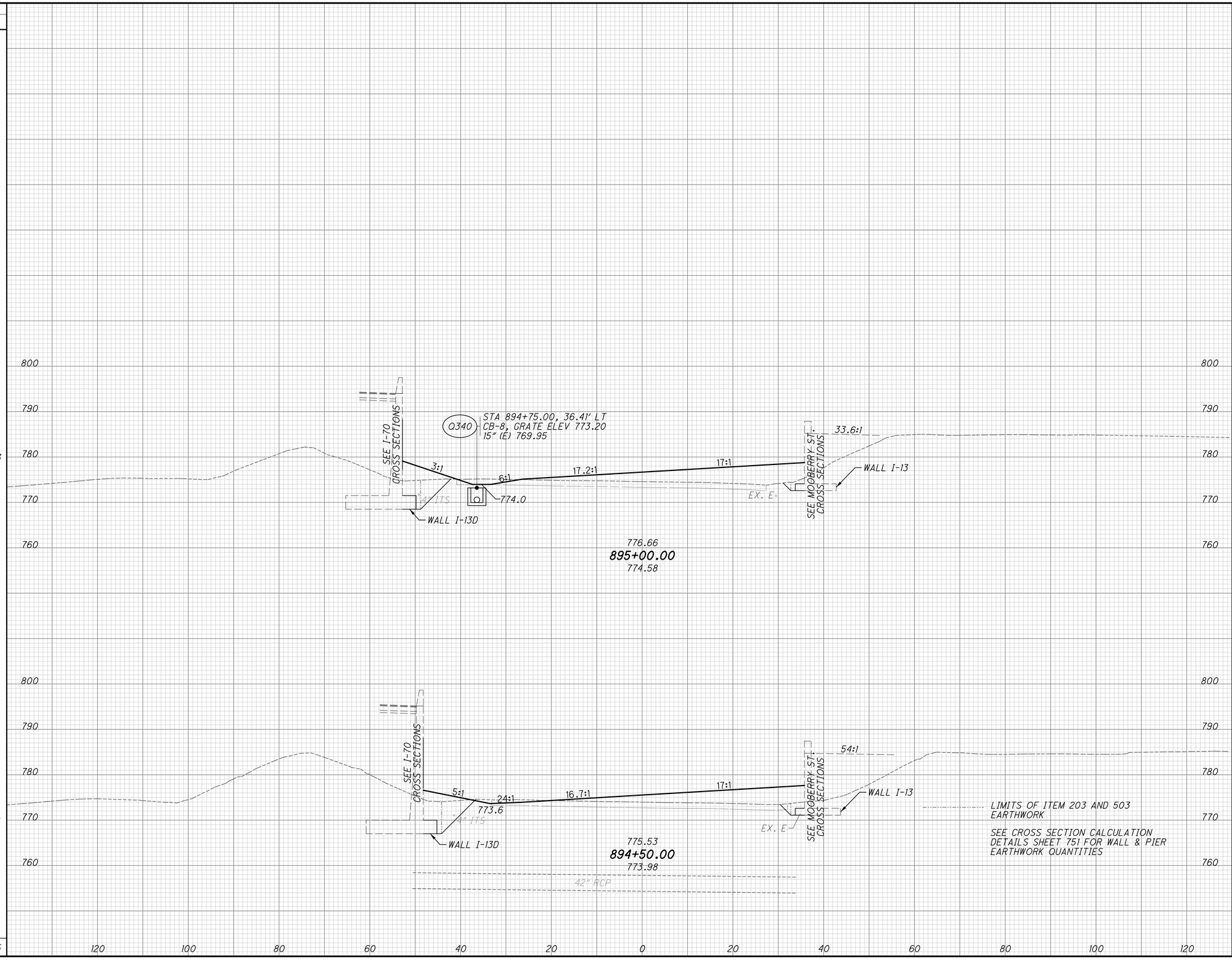

CALCULATED

CHECKED

CROSS SECTIONS RAMP Q3
STA. 894+50.00 TO STA. 895+00.00

FRA-70-14.54

940
2317

ms consultants, inc.

PLOT.CEL

ms consultants, inc.
msconsultants.com

Ohio DOT Workspace
70\71 East Interchange 2E

www.msconsultants.com

0 1" 0.5"

Batchplot Spec: \\msconsultants.com\Files\production\Q3\60\06634_2E\standards\plotdrv\batchplt.spc
Pen Table: \\msconsultants.com\Files\Standards\ustn\ohdot\V8i\ms\plotting\pen\V8i_ms_std.tbl
Plot Driver: \\msconsultants.com\Files\Standards\ustn\ohdot\v8i\ms\plotting\PDF.plt

PDF: ohdotV8i
DGN: 60-06634_2E_Columbus

Model: XS_SHEET_895-50.00_TO_896-00.00
Printed: 6/19/2018 @ 8:57:27 AM By: jbougas
File: N:\03\60\06634_2E\roadway\sheets\105322XS058.dgn

34" x 22"

SEEDING		END AREA		VOLUME	
END WIDTH	SQ. YDS.	CUT	FILL	CUT	FILL
93	514	105	346	111	608
92	505	15	311	114	541
	1019			225	1149

CALCULATED

CHECKED

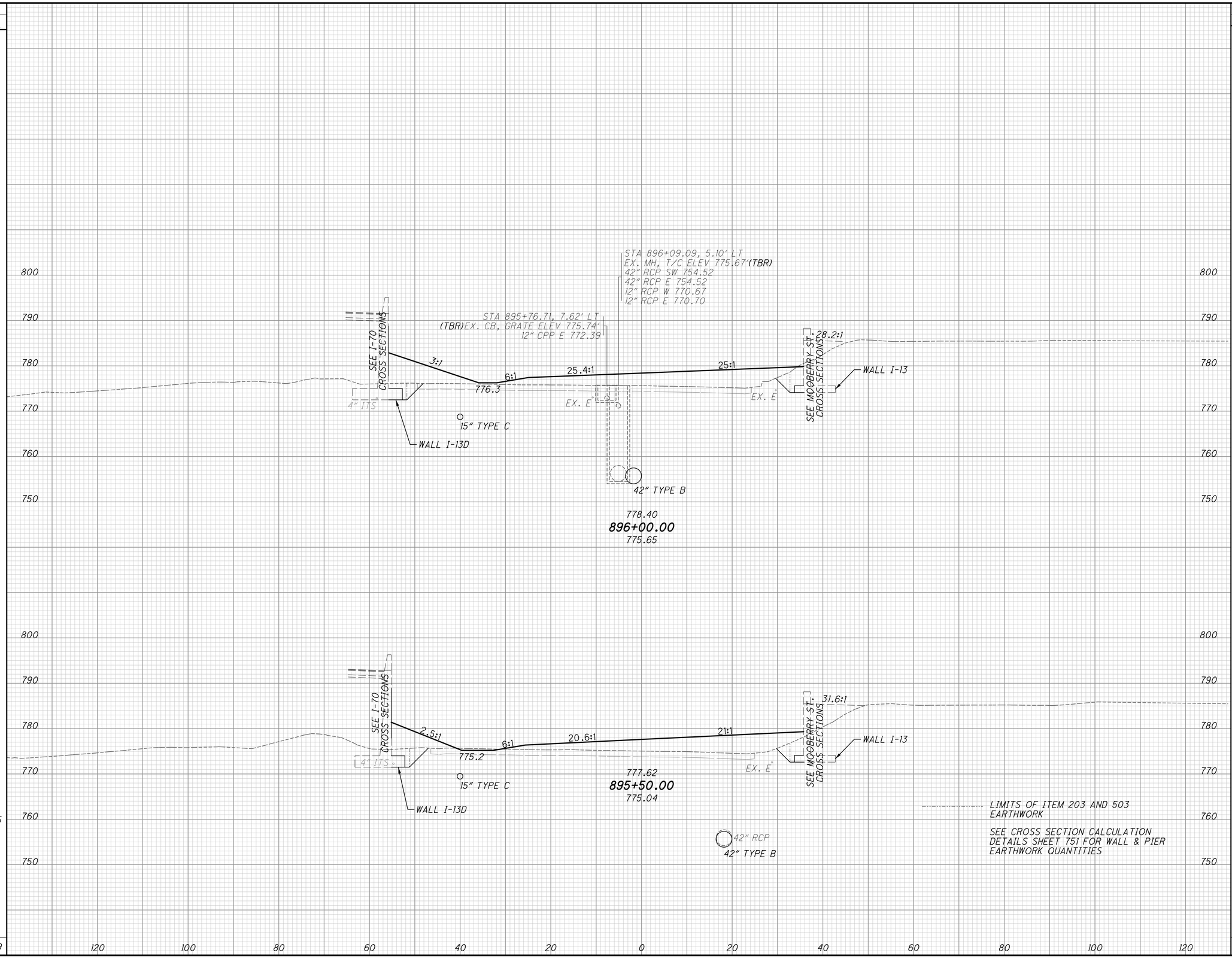

CROSS SECTIONS RAMP Q3
STA. 895+50.00 TO STA. 896+00.00

FRA-70-14.54

941
2317

ms consultants, inc.

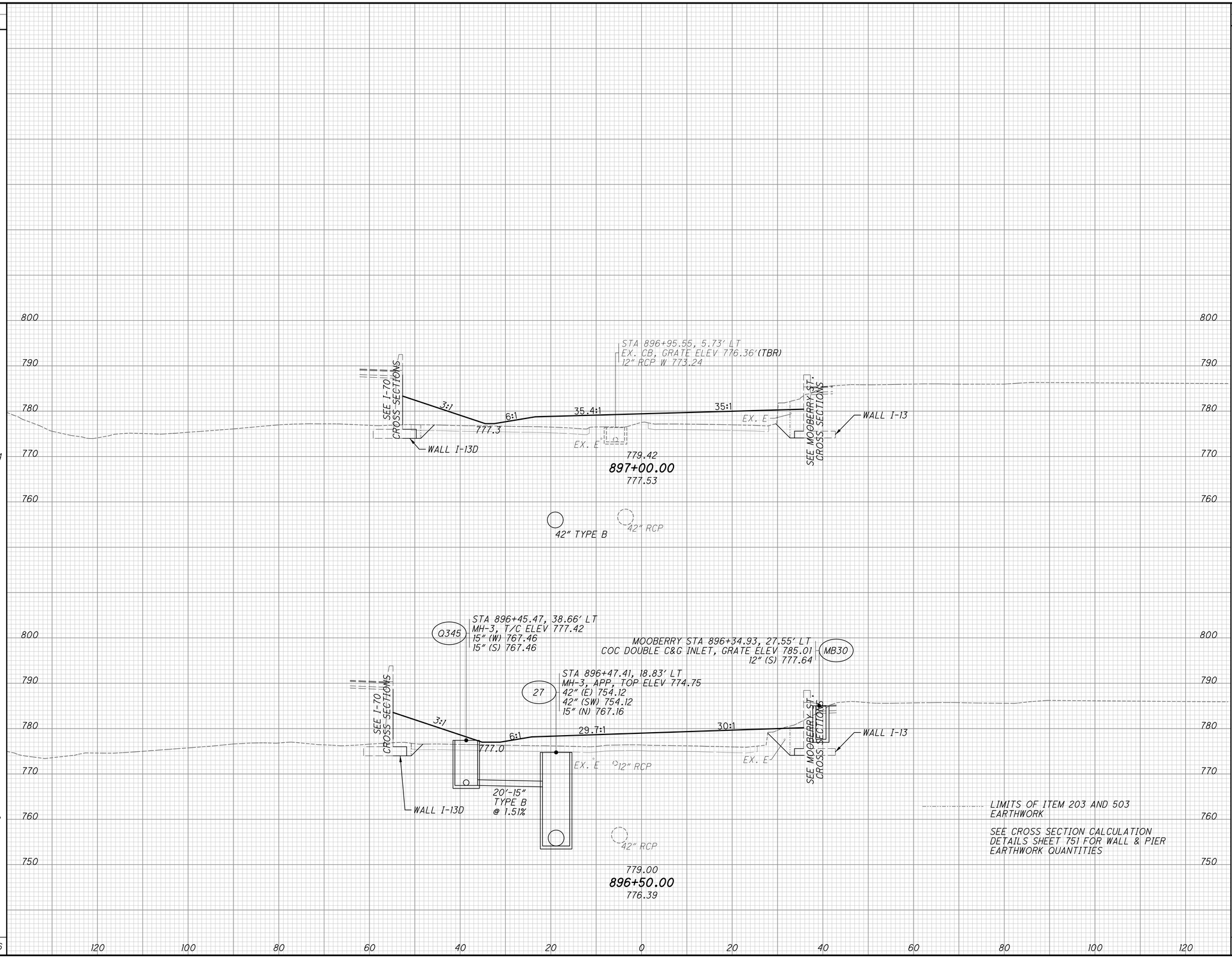

END AREA CUT	END AREA FILL	VOLUME CUT	VOLUME FILL
95	313		
		192	610
112	346		
		201	641
		393	1251

CALCULATED

CHECKED

CROSS SECTIONS RAMP Q3
STA. 896+50.00 TO STA. 897+00.00

FRA-70-14.54

942
2317

ms consultants, inc.

PLOT.CEL

ms consultants, inc.
msconsultants.com

Ohio DOT Workspace
70\71 East Interchange 2E
www.msconsultants.com

Batchplot Spec: \\msconsultants.com\files\production\03\60\06634_2E\standards\plotdrv\batchplt.spc
Pen Table: \\msconsultants.com\files\Standards\ustn\ohdot\V8i\ms\plotting\pen\V8i_ms_std.tbl
Plot Driver: \\msconsultants.com\files\Standards\ustn\ohdot\v8i\ms\plotting\PDF.pltcfg

34" x 22"

Model: XS_SHEET_896+50.00_TO_897+00.00 Div: FENCE_VIEW1
Printed: 6/19/2018 @ 8:57:28 AM By: jdouglas
File: N:\03\60\06634_2E\roadway\sheets\105322XS058.dgn

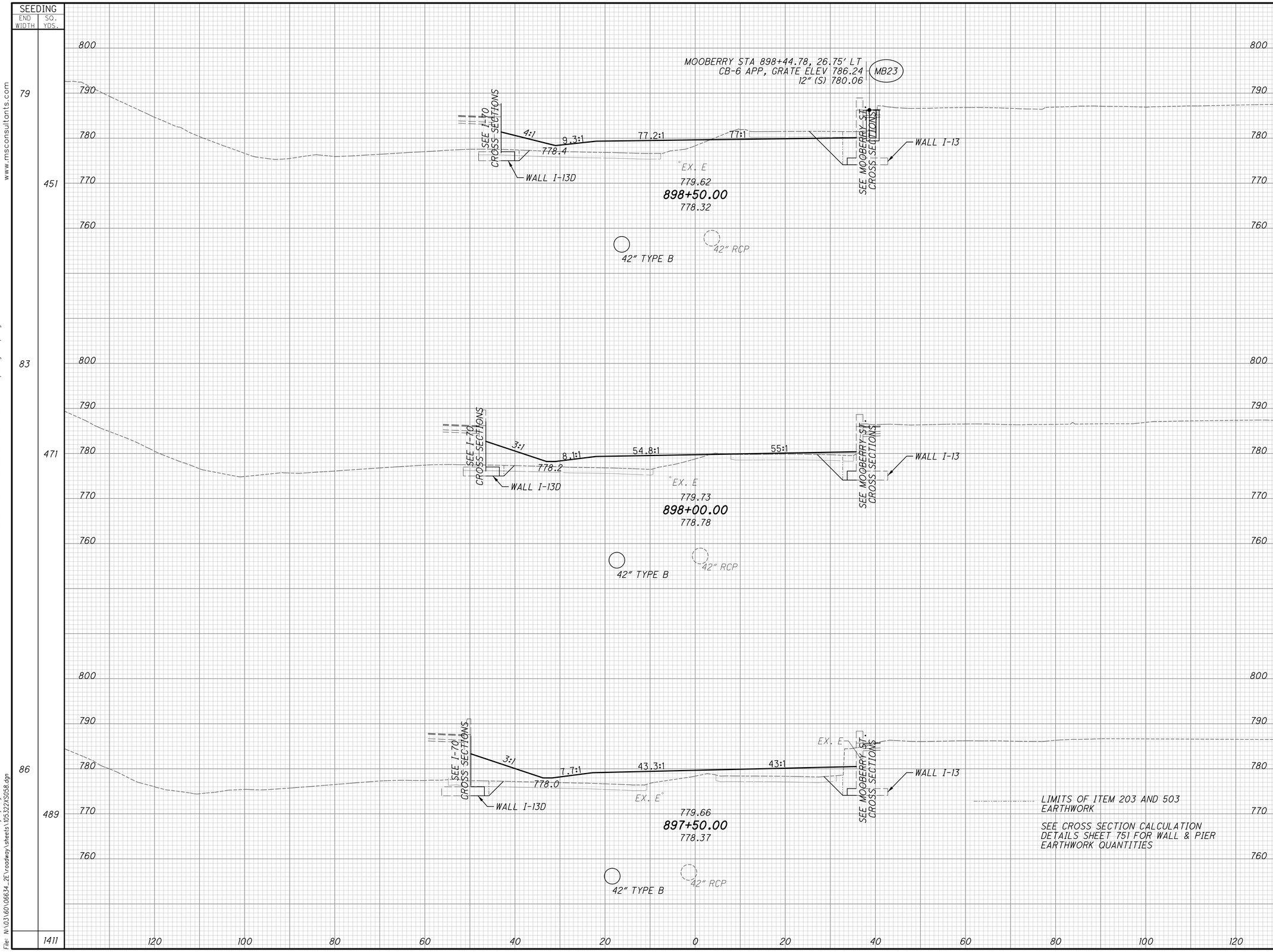

END AREA CUT	END AREA FILL	VOLUME CUT	VOLUME FILL
102	163		
		172	345
83	209		
		156	369
86	190		
		167	465
		495	1179

CALCULATED

CHECKED

CROSS SECTIONS RAMP Q3
STA. 897+50.00 TO STA. 898+50.00

FRA-70-14.54

943
2317

ms consultants, inc.

PLOT.CEL

ms consultants, inc.
msconsultants.com

Ohio DOT Workspace
70\71 East Interchange 2E
www.msconsultants.com

Batchplot Spec: \\msconsultants.com\files\production\03\60\06634_2E\standards\plotdrv\batchplt.spc
Pen Table: \\msconsultants.com\files\Standards\ustn\ohdot\V8i\ms\plotting\pen\V8i_ms_std.tbl
Plot Driver: \\msconsultants.com\files\Standards\ustn\ohdot\v8i\ms\plotting\PDF.pltcfg

34" x 22"

Model: XS_SHEET_897+50.00_TO_898+50.00 Div: FENCE_VIEW1
Printed: 6/19/2018 @ 8:57:28 AM By: jdouglas
File: N:\03\60\06634_2E\roadway\sheets\105322XS058.dgn

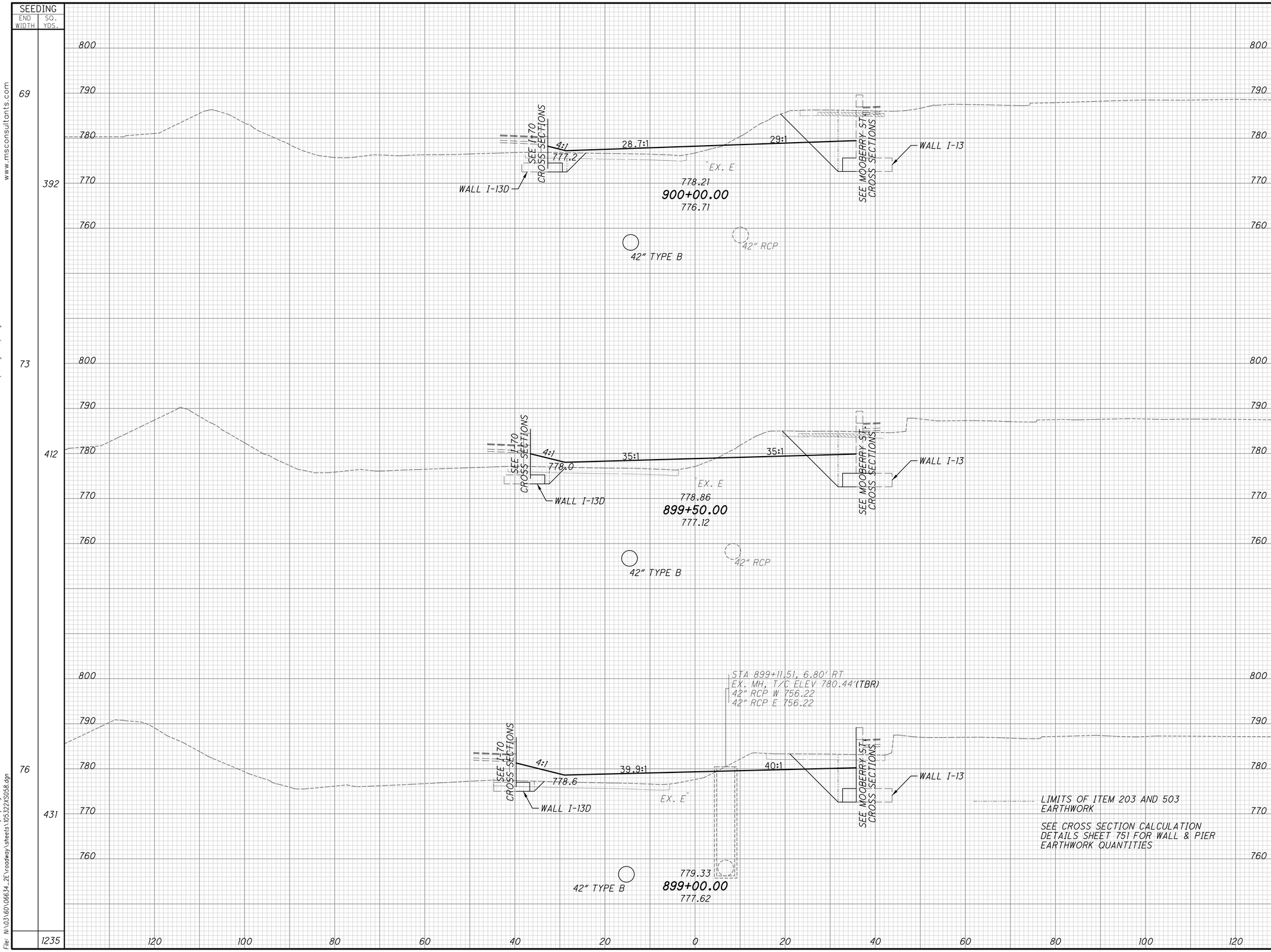

END AREA CUT	END AREA FILL	VOLUME CUT	VOLUME FILL
188	103		
		336	219
174	134		
		297	273
147	161		
		231	300
		864	792

CALCULATED

CHECKED

CROSS SECTIONS RAMP Q3
STA. 899+00.00 TO STA. 900+00.00

FRA-70-14.54

944
2317

ms consultants, inc.

PLOT.CEL

ms consultants, inc.
msconsultants.com

Ohio DOT Workspace
70\71 East Interchange 2E
www.msconsultants.com

Batchplot Spec: \\msconsultants.com\files\production\03\60\06634_2E\standards\plotdrv\batchplt.spc
Pen Table: \\msconsultants.com\files\Standards\ustn\ohdot\V8i\ms\plotting\pen\V8i_ms_std.tbl
Plot Driver: \\msconsultants.com\files\Standards\ustn\ohdot\v8i\ms\plotting\PDF.pltcfg

34" x 22"

Model: XS_SHEET_899+00.00_TO_900+00.00
Printed: 6/19/2018 @ 8:57:29 AM By: jdouglas
File: N:\03\60\06634_2E\roadway\sheets\105322XS058.dgn

PLOT.CEL

ms consultants, inc.
msconsultants.com

www.msconsultants.com

Ohio DOT Workspace
70\71 East Interchange 2E

1" 0.5" 0

Batchplot Spec: \\msconsultants.com\Files\production\Q3\60\06634_2E\standards\plotdr\batchplt.spc
Pen Table: \\msconsultants.com\Files\Standards\usth\ohdot\V8i\ms\plotting\pen\V8i_ms_std.tbl PDF: ohdotV8i
Plot Driver: \\msconsultants.com\Files\Standards\usth\ohdot\V8i\ms\plotting\PDF.pltcfg PCF: 60-06634_2E_Columbus

34" x 22"

Model: XS_SHEET_900+50.00_TO_901+00.00 View: FENCE_VIEW1
Printed: 6/19/2018 @ 8:57:30 AM By: jdouglas
File: N:\Q3\60\06634_2E\roadway\sheets\U05322XS058.dgn

SEEDING END WIDTH	SEEDING SQ. YDS.
58	
	336
63	
	366
702	

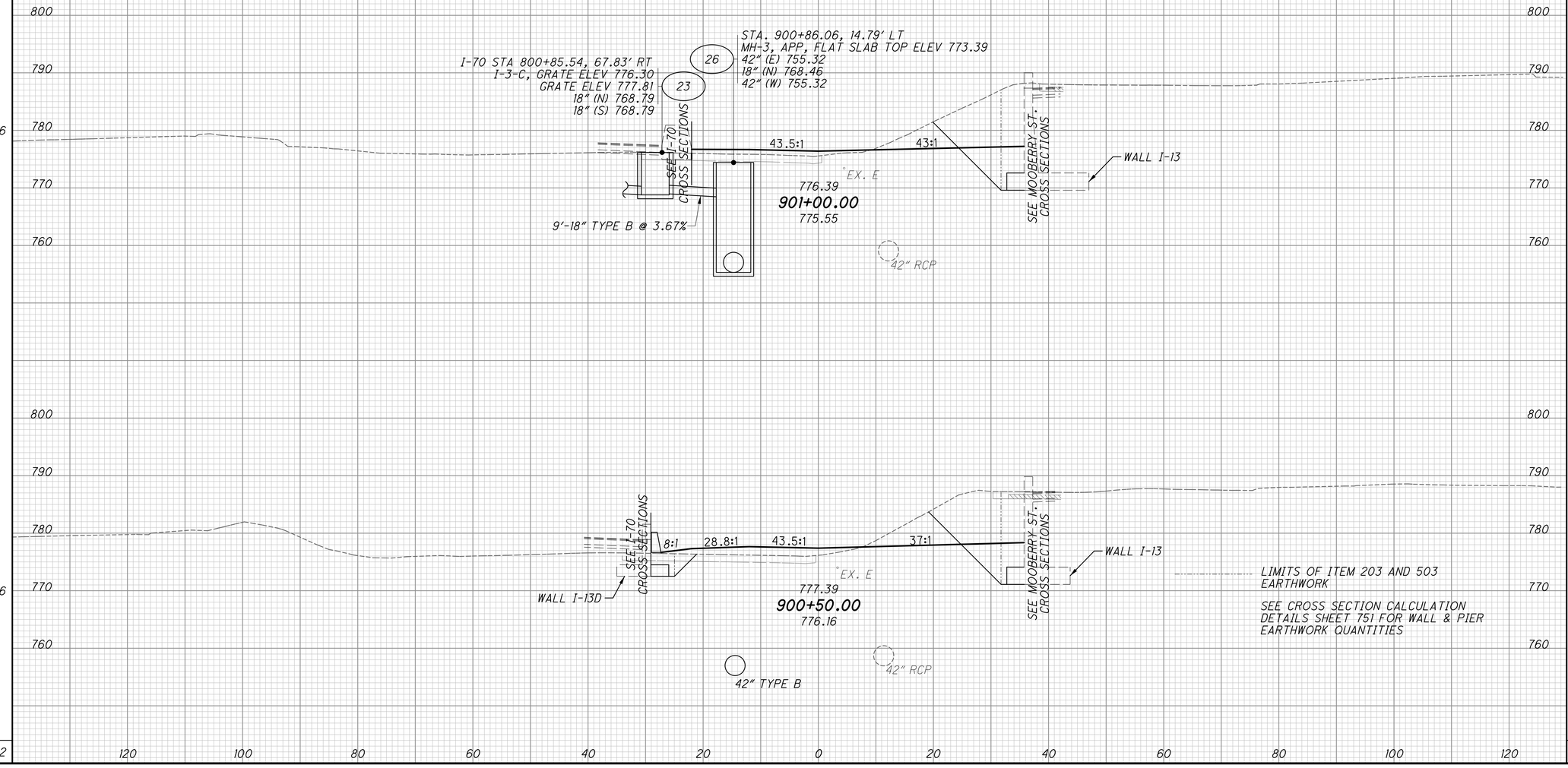

END AREA CUT	END AREA FILL	VOLUME CUT	VOLUME FILL
165	78		
		334	162
194	99		
		354	187
		688	349

CALCULATED

CHECKED

CROSS SECTIONS RAMP Q3
STA. 900+50.00 TO STA. 901+00.00

FRA-70-14.54

945
2317

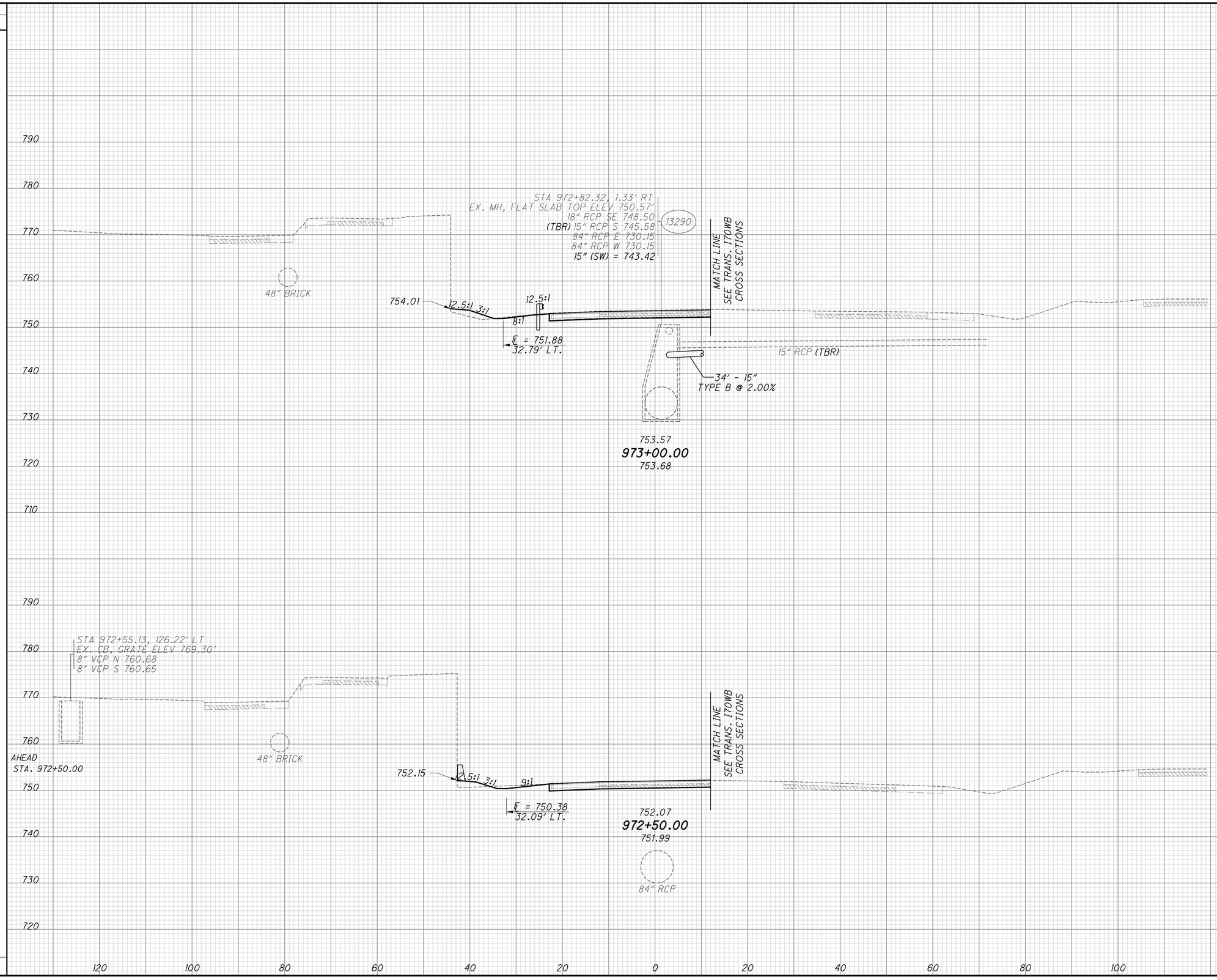

SEEDING END WIDTH	SEEDING SQ. YDS.	END AREA CUT	END AREA FILL	VOLUME CUT	VOLUME FILL
23		40	9		
	121			71	15
121	0	37	8	0	0
	121			71	15

CALCULATED JJR
CHECKED ALL

CROSS SECTIONS - TRANS I-71 S.B.
STA. 972+50.00 TO STA. 973+00.00

FRA-70-14.54

946
2317

ms consultants, inc.

PLOT.CEL

ms consultants, inc.
msconsultants.com

Ohio DOT Workspace
70\71 East Interchange 2E
www.msconsultants.com

Batchplot Spec: \\msconsultants.com\files\production\03\60\06634_2E\standards\plotdrv\batchplt.spc
Pen Table: \\msconsultants.com\files\Standards\ustn\ohdot\V8i\ms\plotting\pen\V8i_ms_std.tbl
Plot Driver: \\msconsultants.com\files\Standards\ustn\ohdot\v8i\ms\plotting\PDF.pltcfg

34" x 22"

Model: XS_SHEET_temporary_model_name\idw: FENCE_VIEW1
Printed: 6/19/2018 @ 8:57:37 AM By: jdouglas
File: N:\03\60\06634_2E\roadway\sheets\Sheets from 2LMN\77370_XS002(2LMN).dgn

PLOT.CEL

ms consultants, inc.
msconsultants.com

www.msconsultants.com

Ohio DOT Workspace
70\71 East Interchange 2E

PDF: ohdot\V8i
DGN: 60-06634_2E_Columbus

Batchplot Spec: \\msconsultants.com\files\production\03\60\06634_2E\standards\plotdir\batchplt.spc
Pen Table: \\msconsultants.com\files\Standards\usth\ohdot\V8i\ms\plotting\pen\V8i_ms_std.tbl
Plot Driver: \\msconsultants.com\files\Standards\usth\ohdot\v8i\ms\plotting\PDF.pltcfg

Model: XS_SHEET_temporary_model_name
Printed: 6/19/2018 @ 8:57:38 AM By: jdouglas
File: N:\03\60\06634_2E\roadway\sheets\Sheets from 2LMN\77370_XS002(2LMN).dgn

34" x 22"

SEEDING	
END WIDTH	SQ. YDS.
25	
	136
24	
	129
	265

END AREA		VOLUME	
CUT	FILL	CUT	FILL
61	0		
		100	0
47	0		
		81	8
		181	8

CALCULATED JJR
CHECKED ALL

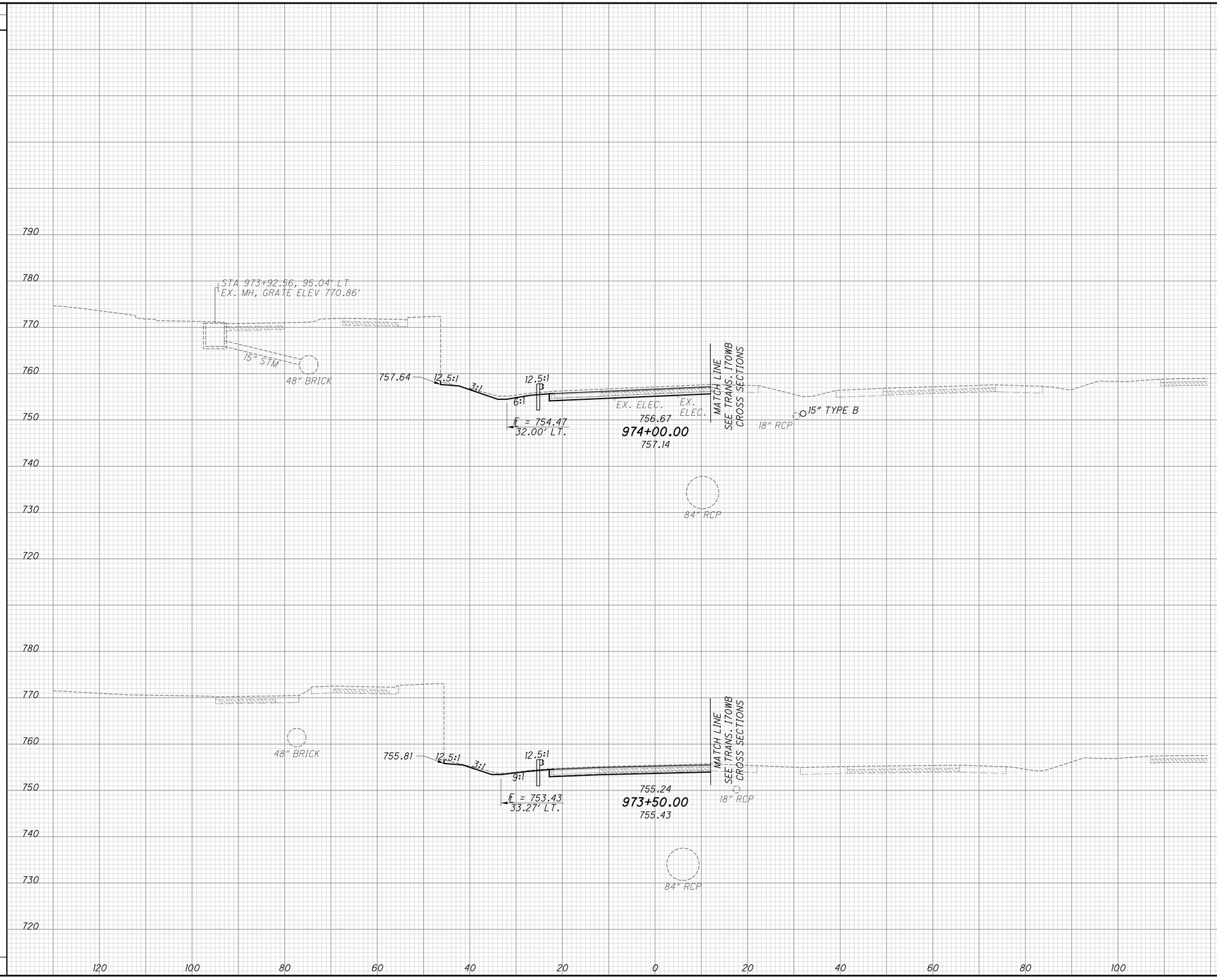

CROSS SECTIONS - TRANS I-71 S.B.
STA. 973+50.00 TO STA. 974+00.00

FRA-70-14.54

947
2317

ms consultants, inc.

PLOT.CEL

ms consultants, inc.
msconsultants.com

Ohio DOT Workspace
70\71 East Interchange 2E
www.msconsultants.com

Batchplot Spec: \\msconsultants.com\files\production\03\60\06634_2E\standards\plotdrv\batchplt.spc
Pen Table: \\msconsultants.com\files\Standards\ustn\ohdot\V8i\ms\plotting\pen\V8i_ms_std.tbl
Plot Driver: \\msconsultants.com\files\Standards\ustn\ohdot\v8i\ms\plotting\PDF.pltcfg

34" x 22"

Model: XS_SHEET_temporary_model_name\Fence_VIEW1
Printed: 6/19/2018 @ 8:57:39 AM By: jdouglas
File: N:\03\60\06634_2E\roadway\sheets\Sheets from 2LMN\77370_XS002(2LMN).dgn

SEEDING END WIDTH	SEEDING SQ. YDS.
23	
	130
24	
	137
	267

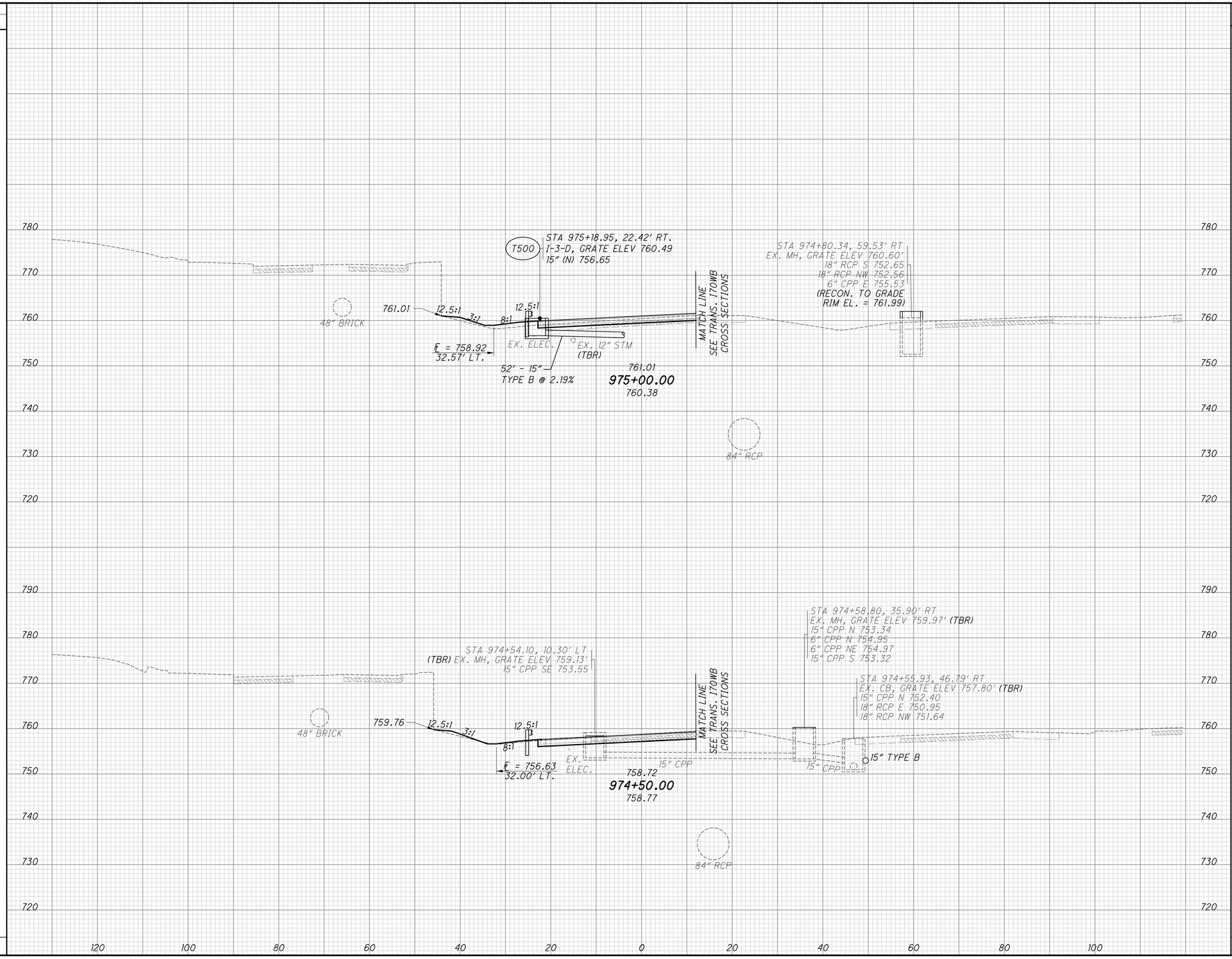

END AREA CUT	END AREA FILL	VOLUME CUT	VOLUME FILL
32	34		
		62	37
36	6		
		90	6
		152	43

CALCULATED JJR
CHECKED ALL

CROSS SECTIONS - TRANS I-71 S.B.
STA. 974+50.00 TO STA. 975+00.00

FRA-70-14.54

948
2317

ms consultants, inc.

PLOT.CEL

ms consultants, inc.
msconsultants.com

www.msconsultants.com

Ohio DOT Workspace
70\71 East Interchange 2E

1"
0.5"
0

Batchplot Spec: \\msconsultants.com\Files\production\03\60\06634_2E\standards\plotdrv\batchplt.spc
Pen Table: \\msconsultants.com\Files\Standards\ustn\ohdot\V8i\ms\plotting\pen\V8i_ms_std.tbl
Plot Driver: \\msconsultants.com\Files\Standards\ustn\ohdot\v8i\ms\plotting\PDF.pltcfg
PDF: ohdotV8i
PCF: 60-06634_2E_Columbus

Model: XS_SHEET_temporary_model_nomodel
Printed: 6/19/2018 @ 8:57:40 AM
File: N:\03\60\06634_2E\roadway\sheets\Sheets from 2LMN\77370_XS002(2LMN).dgn
View: FENCE_VIEW1
By: jdouglas

34" x 22"

SEEDING	
END WIDTH	SQ. YDS.
13	
	78
16	
	106
	184

764.05
48" BRICK
12.5:1 4:1 5:1
EX. ELEC.
℄ = 762.88
31.06' LT.
764.96
976+00.00
763.54
MATCH LINE
SEE TRANS. I70WB
CROSS SECTIONS
84" RCP

STA 775+16.77, 2.97' LT
I-3-C, GRATE ELEV 763.05
15" (NW) 755.51
15" (SW) 755.51
T501
MATCH LINE
SEE TRANS. I70WB
CROSS SECTIONS
762.62
48" BRICK
12.5:1 3:1 5:1
℄ = 761.01
31.61' LT.
EX. ELEC.
EX. 12" STM (TBR)
52' - 15" TYPE B @ 2.19%
61' - 15" TYPE B @ 1.87%
763.09
975+50.00
761.98
84" RCP

780 770 760 750 740 730 720

120 100 80 60 40 20 0 20 40 60 80 100

END AREA		VOLUME	
CUT	FILL	CUT	FILL
2	72		
		42	118
44	55		
		70	83
		112	201

CALCULATED JJR
CHECKED ALL

CROSS SECTIONS - TRANS I-71 S.B.
STA. 975+50.00 TO STA. 976+00.00

FRA-70-14.54

949
2317

PLOT.CEL

ms consultants, inc.
msconsultants.com

www.msconsultants.com

Ohio DOT Workspace
70\71 East Interchange 2E

0 0.5" 1"

Batchplot Spec: \\msconsultants.com\files\production\03\60\06634_2E\standards\plotdir\batchplt.spc
Pen Table: \\msconsultants.com\files\Standards\usth\ohdot\V8i\ms\plotting\pen\V8i_ms_std.tbl
Plot Driver: \\msconsultants.com\files\Standards\usth\ohdot\v8i\ms\plotting\PDF.pltcfg

Model: XS_SHEET_temporary_model_name
Printed: 6/19/2018 @ 8:57:41 AM By: jdougas
File: N:\03\60\06634_2E\roadway\sheets\Sheets from 2LMN\77370_XS002(2LMN).dgn

34" x 22"

SEEDING	
END WIDTH	SQ. YDS.
6	
	44
9	
	61
	105

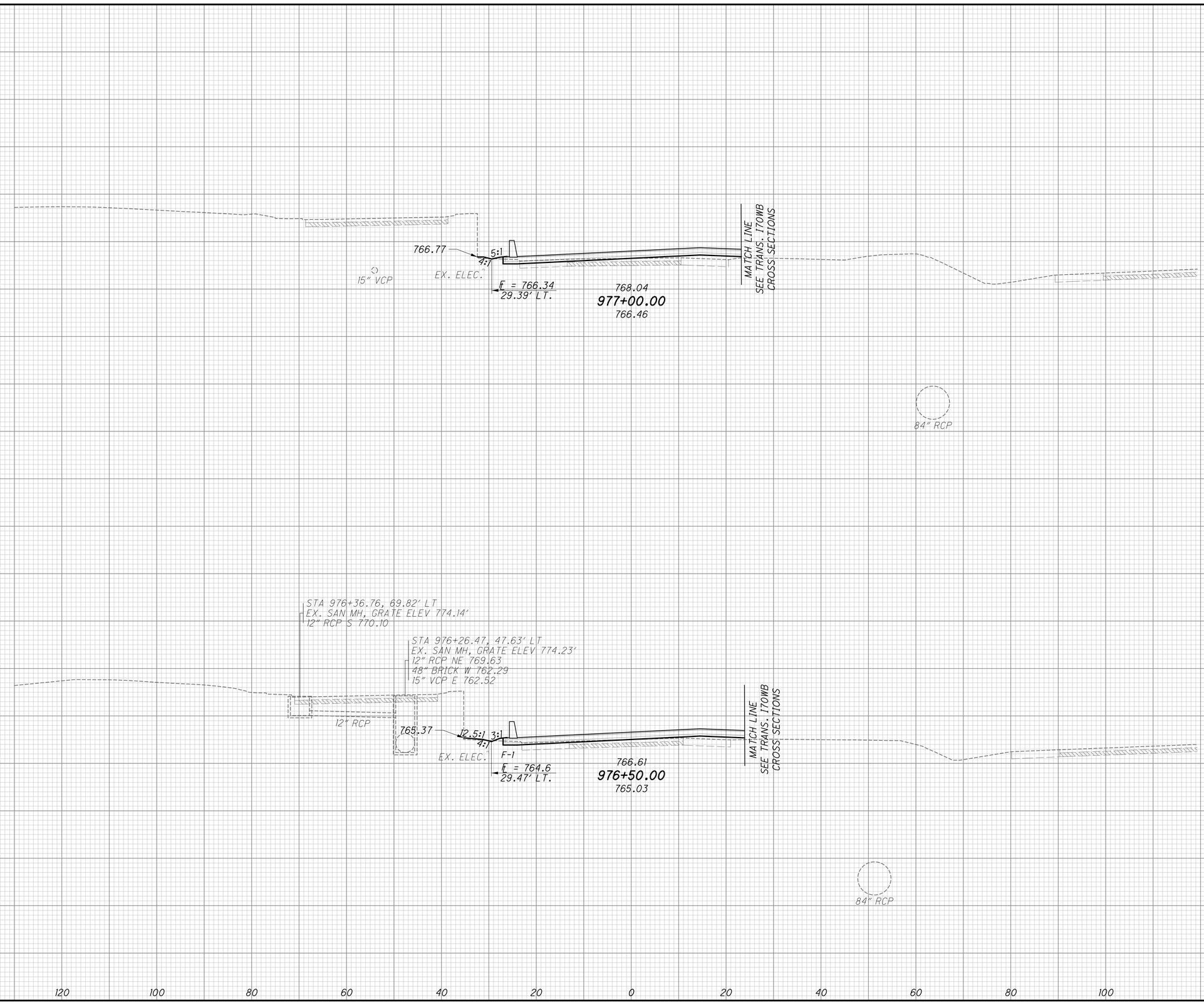

END AREA		VOLUME	
CUT	FILL	CUT	FILL
49	69		
		91	130
49	71		
		47	133
		138	263

CALCULATED JJR
CHECKED ALL

CROSS SECTIONS - TRANS I-71 S.B.
STA. 976+50.00 TO STA. 977+00.00

FRA-70-14.54

950
2317

ms consultants, inc.

PLOT.CEL

ms consultants, inc.
msconsultants.com

Ohio DOT Workspace
70\71 East Interchange 2E

www.msconsultants.com

1" / 0.5" / 0

Batchplot Spec: \\msconsultants.com\files\production\03\60\06634_2E\standards\plotdrv\batchplt.spc
Pen Table: \\msconsultants.com\files\Standards\ustn\ohdot\V8\ms\plotting\pen\V8i_ms_std.tbl PCF: ohdot_V8i
Plot Driver: \\msconsultants.com\files\Standards\ustn\ohdot\V8\ms\plotting\PDF.pltcfg PCF: 60-06634_2E_Columbus

34" x 22"

Model: XS_SHEET_temporary_model_name Level: FENCE_VIEW1
Printed: 6/19/2018 @ 8:57:41 AM By: jdouglas
File: N:\03\60\06634_2E\roadway\sheets\Sheets from 2LMN 77370_XS0021LMN.dgn

SEEDING	
END WIDTH	SQ. YDS.
1	9
2	19
4	30
	58

790 / 780 / 770 / 760 / 750 / 740 / 730

STA 978+51.87, 28.64' LT
EX. CB, GRATE ELEV 769.18'
15" CPP SW 766.07

770.19

MATCH LINE
SEE TRANS. I70WB
CROSS SECTIONS

15" VCP

EX. ELEC.

15" CPP

771.01
978+50.00
770.68

MATCH LINE
SEE TRANS. I70WB
CROSS SECTIONS

STA 978+07.45, 25.67' RT
EX. MH, GRATE ELEV 769.53'
15" CPP NE 763.80
15" CPP E 763.71
15" CPP SW 763.66
(RECON. TO GRADE
RIM EL. = 771.12)

EX. ELEC.
769.35

15" VCP

15" CPP

770.24
978+00.00
769.23

15" CPP

16.19, 141.93' LT
RATE ELEV 775.96'

EX. ELEC.

4:1
4:1

15" VCP

F = 767.96
27.84' LT.

769.25
977+50.00
767.75

MATCH LINE
SEE TRANS. I70WB
CROSS SECTIONS

13294

STA 977+68.19, 82.79' RT
EX. MH, GRATE ELEV 764.41'
12" VCP S 758.21
15" CPP N 757.27
72" RCP E 733.31
84" RCP W 733.01
54" RCP SE 733.66

120 100 80 60 40 20 0 20 40 60 80 100

END AREA		VOLUME	
CUT	FILL	CUT	FILL
56	14		
		96	47
48	36		
		67	60
24	28		
		68	90
		231	197

CALCULATED JJR
CHECKED ALL

CROSS SECTIONS - TRANS I-71 S.B.
STA. 977+50.00 TO STA. 978+50.00

FRA-70-14.54

951
2317

34" x 22"

Model: XS_SHEET_temporary_model_name View: FENCE_VIEW1
Printed: 6/19/2018 @ 8:57:42 AM By: jdouglas
File: N:\03\60\06634_2E\roadway\sheets\Sheets from 2LMN\77370_XS002(2LMN).dgn

Batchplot Spec: \\msconsultants.com\files\production\03\60\06634_2E\standards\plotdrv\batchplt.spf
Pen Table: \\msconsultants.com\files\Standards\ustn\ohdot\V8i\ms\plotting\pen\V8i_ms_std.tbl
Plot Driver: \\msconsultants.com\files\Standards\ustn\ohdot\v8i\ms\plotting\PDF.pltcfg

PCF: ohdotV8i
PCF: 60-06634_2E_Columbus

0 0.5" 1"

Ohio DOT Workspace
70\71 East Interchange 2E

PLOT.CEL

ms consultants, inc.
msconsultants.com

www.msconsultants.com

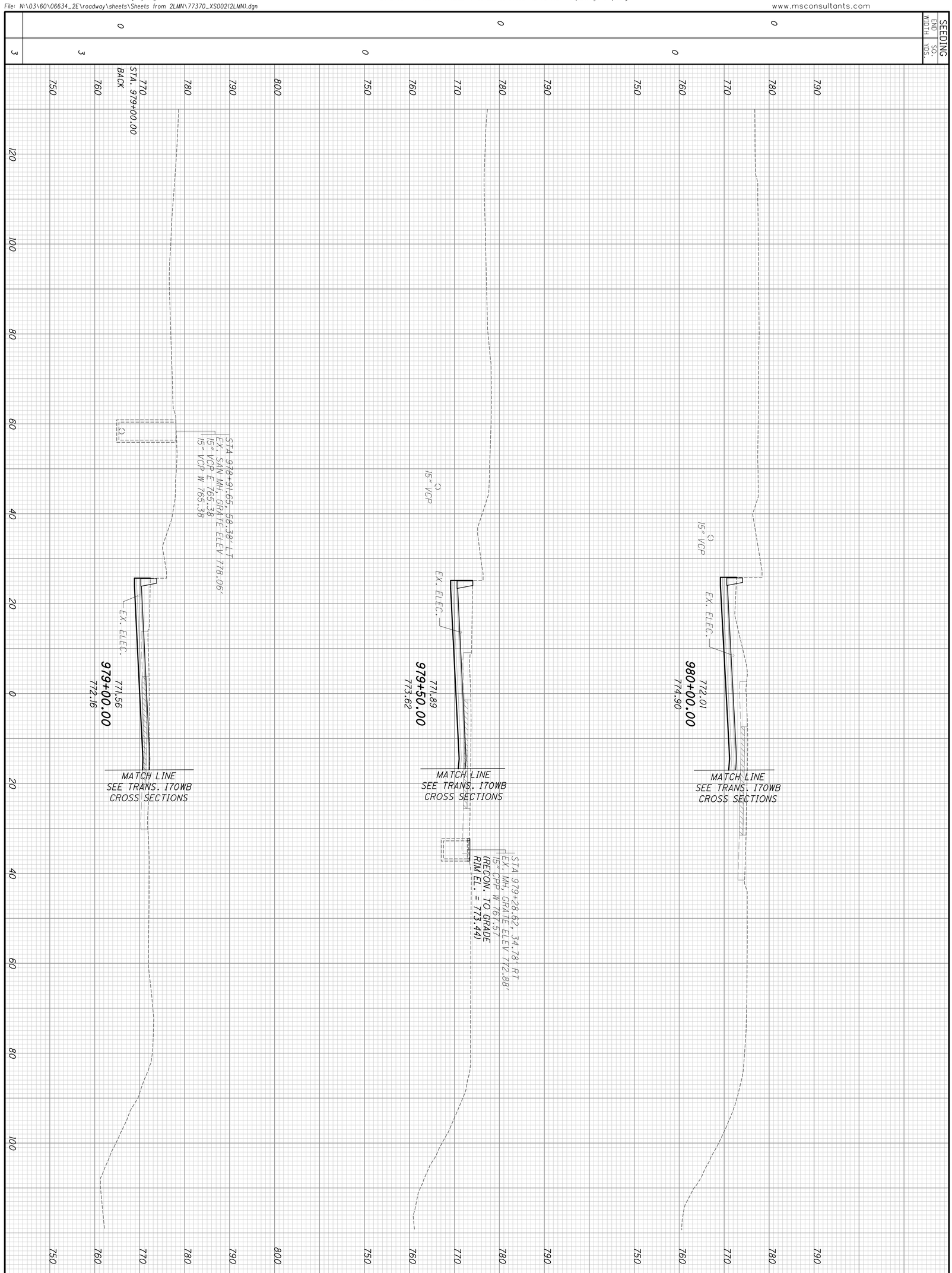

FRA-70-14.54

CROSS SECTIONS - TRANS I-71 S.B.
STA. 979+00.00 TO STA. 980+00.00

CALCULATED JJR
CHECKED ALL

ms consultants, inc.

PLOT.CEL

ms consultants, inc.
msconsultants.com

Ohio DOT Workspace
70\71 East Interchange 2E

www.msconsultants.com

1"
0.5"
0

Batchplot Spec: \\msconsultants.com\files\production\03\60\06634_2E\standards\plotdrv\batchplt.spc
Pen Table: \\msconsultants.com\files\Standards\ustn\ohdot\V8\ms\plotting\pen\V8i_ms_std.tbl PDF: ohdot\V8i
Plot Driver: \\msconsultants.com\files\Standards\ustn\ohdot\v8i\ms\plotting\PDF.pltcfg PDF: 60-06634_2E_Columbus

Model: XS_SHEET_temporary_model_name Date: FENCE_VIEW1
Printed: 6/19/2018 @ 8:57:43 AM By: jdouglas
File: N:\03\60\06634_2E\roadway\sheets\Sheets from 2LMN\77370_XS0021LMN.dgn

34" x 22"

SEEDING	
END WIDTH	SQ. YDS.
19	80
9	26
0	0
	106

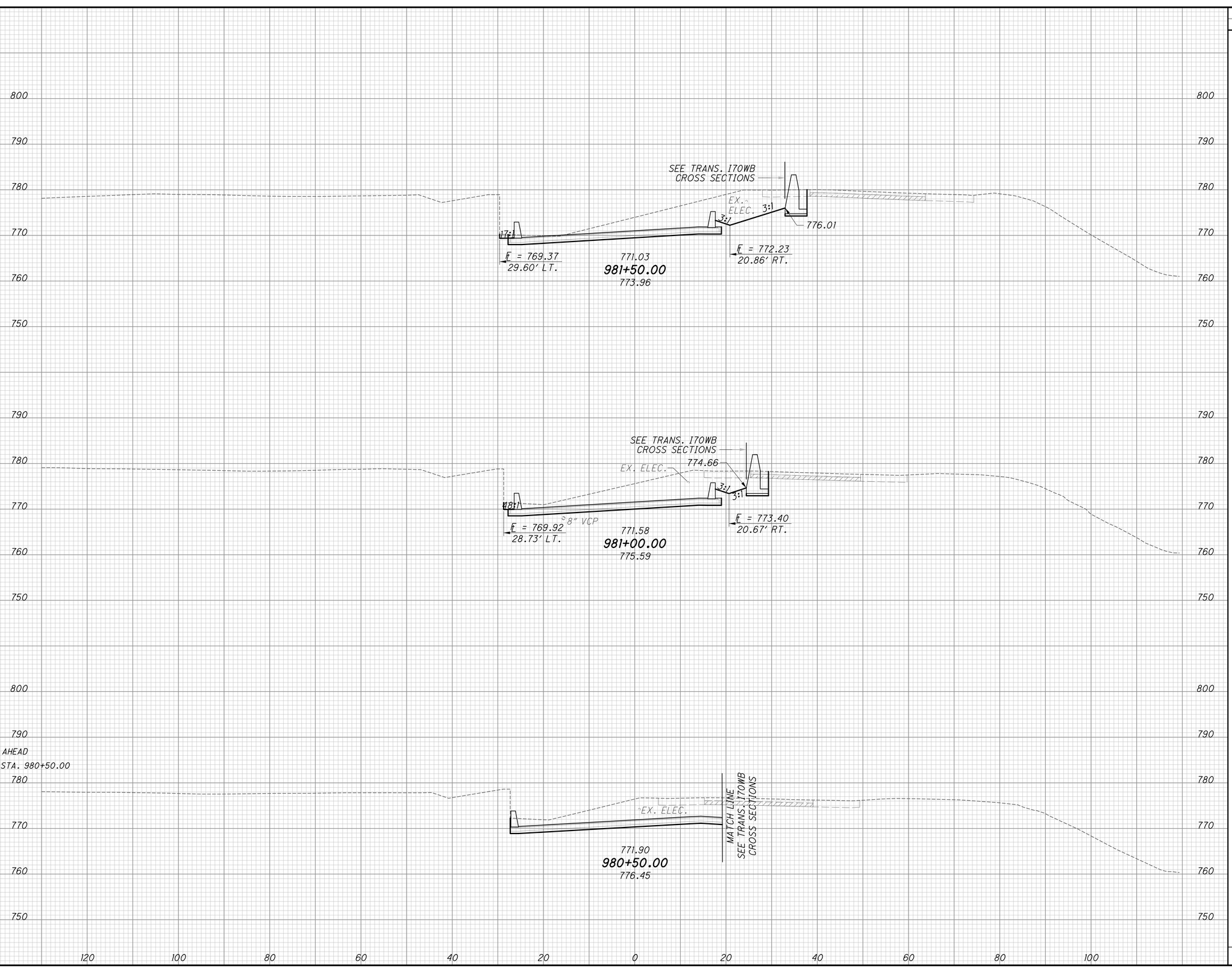

END AREA		VOLUME	
CUT	FILL	CUT	FILL
300	0		
		534	0
278	0		
		458	0
216	0		
		353	0
		1345	0

CALCULATED JJR
CHECKED ALL

CROSS SECTIONS - TRANS I-71 S.B.
STA. 980+50.00 TO STA. 981+50.00

FRA-70-14.54

953
2317

ms consultants, inc.

PLOT.CEL

ms consultants, inc.
msconsultants.com

Ohio DOT Workspace
70\71 East Interchange 2E
www.msconsultants.com

1" 0 0.5"

Batchplot Spec: \\msconsultants.com\files\production\03\60\06634_2E\standards\plotdir\batchplt.spc
Pen Table: \\msconsultants.com\files\Standards\usth\ohdot\V8i\ms\plotting\pen\V8i_ms_std.tbl
Plot Driver: \\msconsultants.com\files\Standards\usth\ohdot\v8i\ms\plotting\PDF.pltcfg

Model: XS_SHEET_temporary_model_name
Printed: 6/19/2018 @ 8:57:44 AM By: jdougas
File: K:\03\60\06634_2E\roadway\sheets\Sheets from 2LMN\77370_XS002(2LMN).dgn

34" x 22"

SEEDING END WIDTH	SEEDING SQ. YDS.
	89
	411
	59
	263
	36
	152
	826

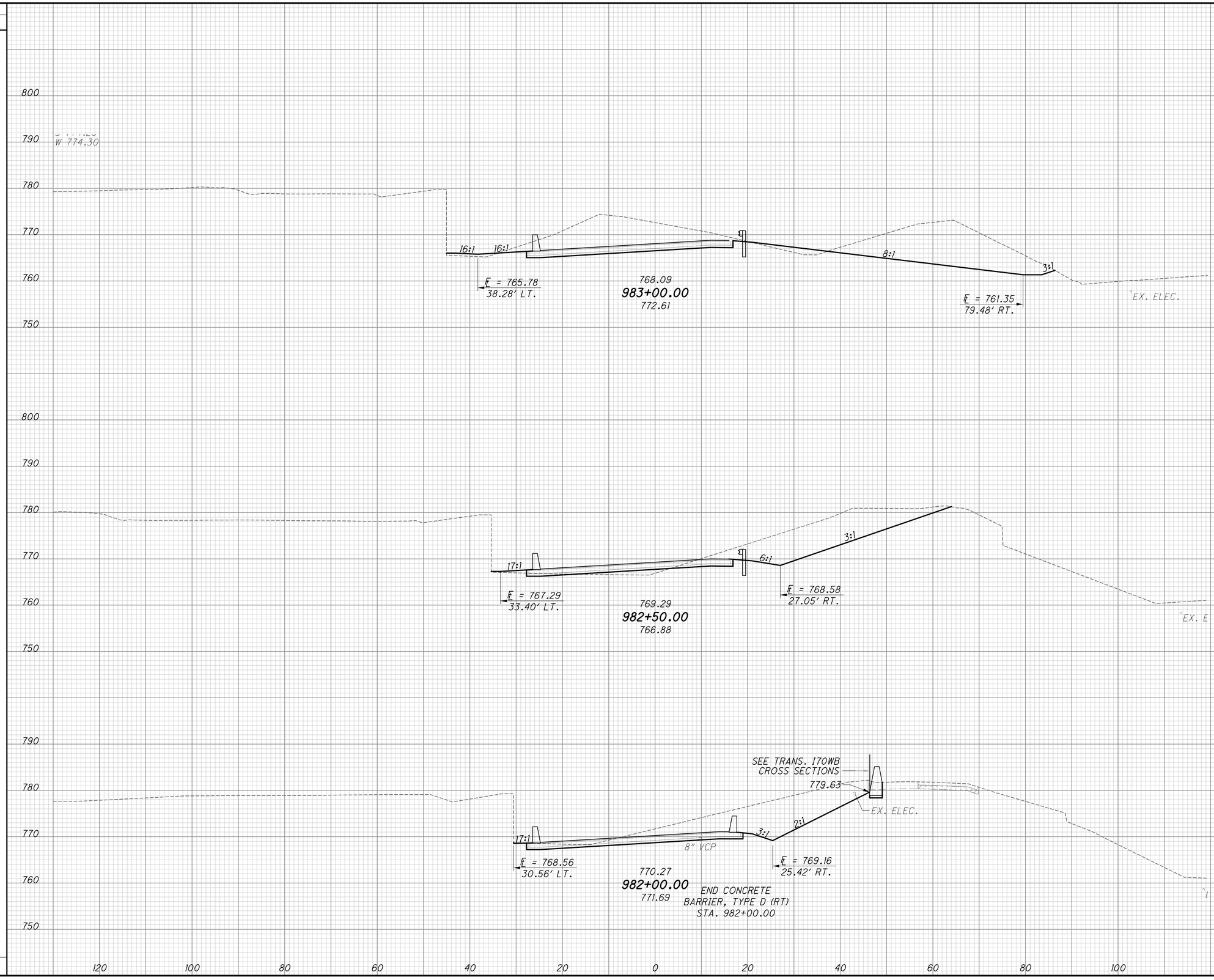

END AREA CUT	END AREA FILL	VOLUME CUT	VOLUME FILL
529	19		
		723	31
252	15		
		515	14
304	0		
		559	0
		1797	45

CALCULATED JJR
CHECKED ALL

CROSS SECTIONS - TRANS I-71 S.B.
STA. 982+00.00 TO STA. 983+00.00

FRA-70-14.54

954
2317

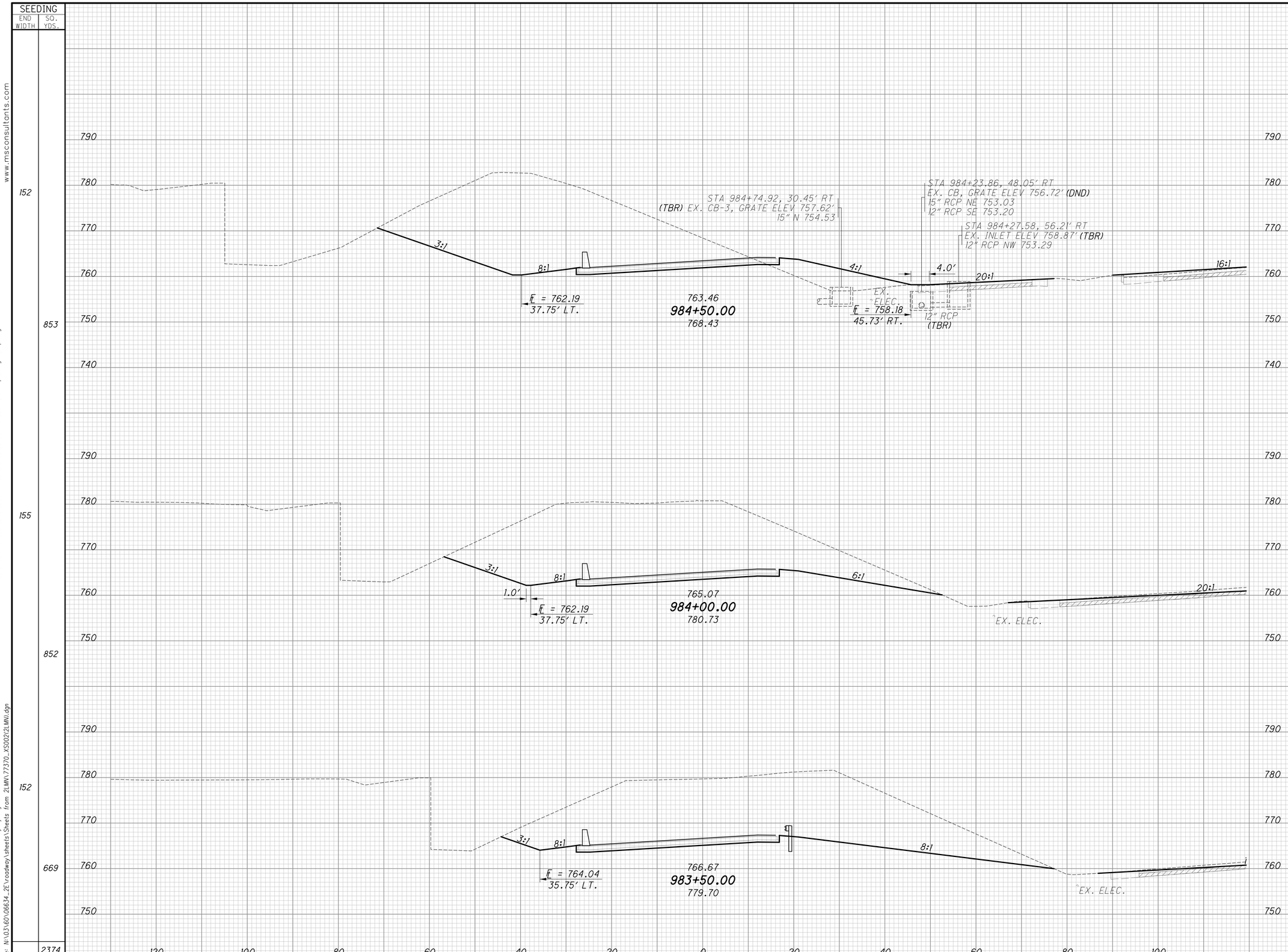

END AREA CUT	END AREA FILL	VOLUME CUT	VOLUME FILL
1128	211		
		2242	259
1293	69		
		2442	143
1344	85		
		1734	96
		6418	498

CALCULATED JJR
CHECKED ALL

CROSS SECTIONS - TRANS I-71 S.B.
STA. 983+50.00 TO STA. 984+50.00

FRA-70-14.54

955
2317

ms consultants, inc.

PLOT.CEL

ms consultants, inc.
msconsultants.com

www.msconsultants.com

Ohio DOT Workspace
70\71 East Interchange 2E

Batchplot Spec: \\msconsultants.com\files\production\03\60\06634_2E\standards\plotdrv\batchplt.spec
Pen Table: \\msconsultants.com\files\Standards\ustn\ohdot\V8i\ms\plotting\pen\V8i_ms_std.tbl
Plot Driver: \\msconsultants.com\files\Standards\ustn\ohdot\v8i\ms\plotting\PDF.pltcfg

34" x 22"

Model: XS_SHEET_temporary_model_name
Printed: 6/19/2018 @ 8:57:45 AM By: jdouglas
File: N:\03\60\06634_2E\roadway\sheets\Sheets from 2LMN\77370_XS002(2LMN).dgn

PLOT.CEL

ms consultants, inc.
msconsultants.com

www.msconsultants.com

Ohio DOT Workspace
70\71 East Interchange 2E

1"
0.5"
0

Batchplot Spec: \\msconsultants.com\files\production\03\60\06634_2E\standards\xlotdr\batchplt.spc
Pen Table: \\msconsultants.com\files\Standards\ustn\ohdot\V8i\ms\plotting\pen\V8i_ms_std.tbl PDF: ohdot\V8i
Plot Driver: \\msconsultants.com\files\Standards\ustn\ohdot\v8i\ms\plotting\PDF.pltcfg PCF: 60-06634_2E_Columbus

Model: XS_SHEET_temporary_model_name Name: FENCE_VIEW1
Printed: 6/19/2018 @ 8:57:46 AM By: jdouglas
File: N:\03\60\06634_2E\roadway\sheets\Sheets from 2LMN\77370_XS0021LMN.dgn

34" x 22"

SEEDING	
END WIDTH	SQ. YDS.
106	558
95	606
123	764
	1928

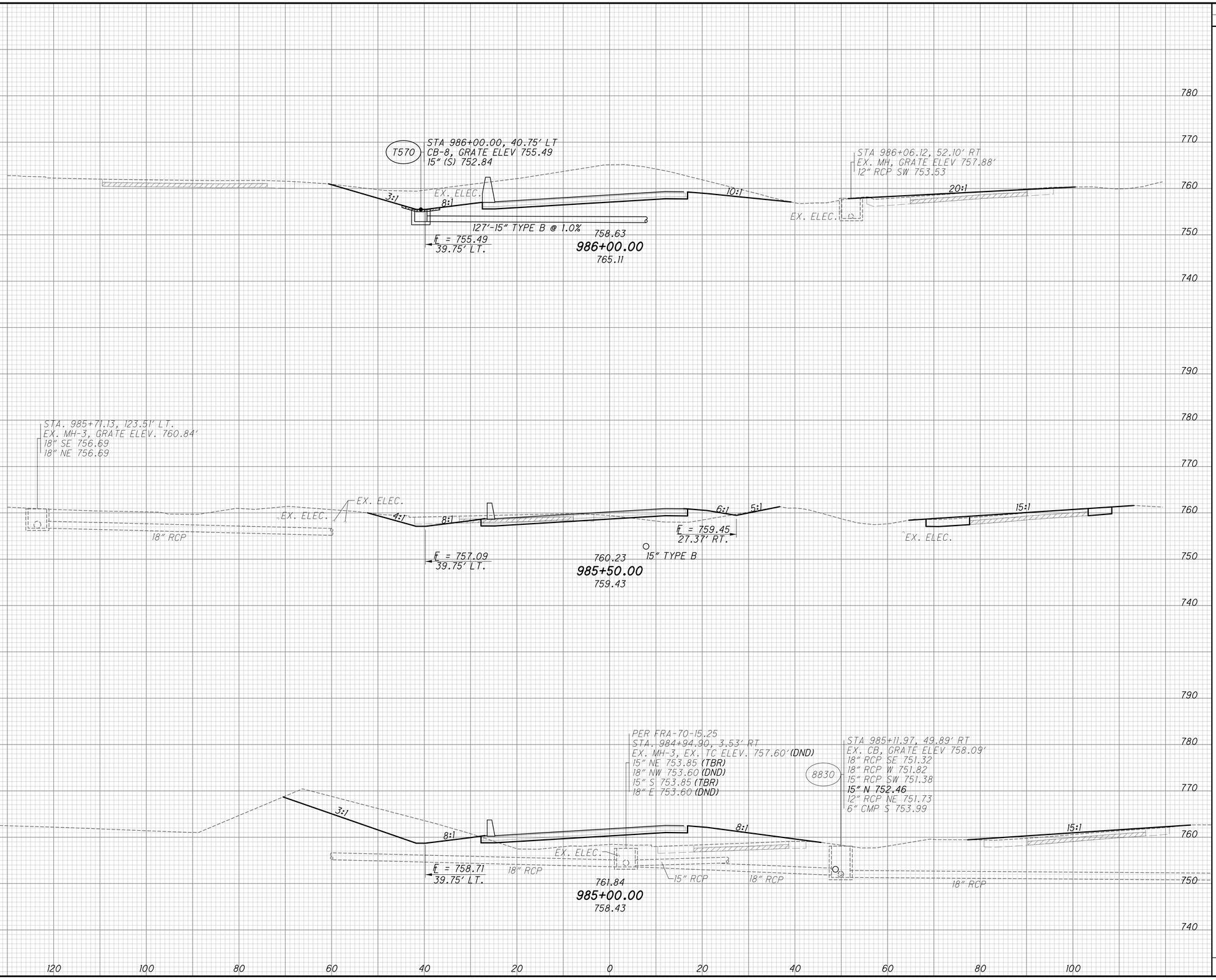

END AREA		VOLUME	
CUT	FILL	CUT	FILL
473	64		
		536	149
106	96		
		304	332
223	262		
		1251	438
		2091	919

CALCULATED JJR
CHECKED ALL

CROSS SECTIONS - TRANS I-71 S.B.
STA. 985+00.00 TO STA. 986+00.00

FRA-70-14.54

956
2317

ms consultants, inc.

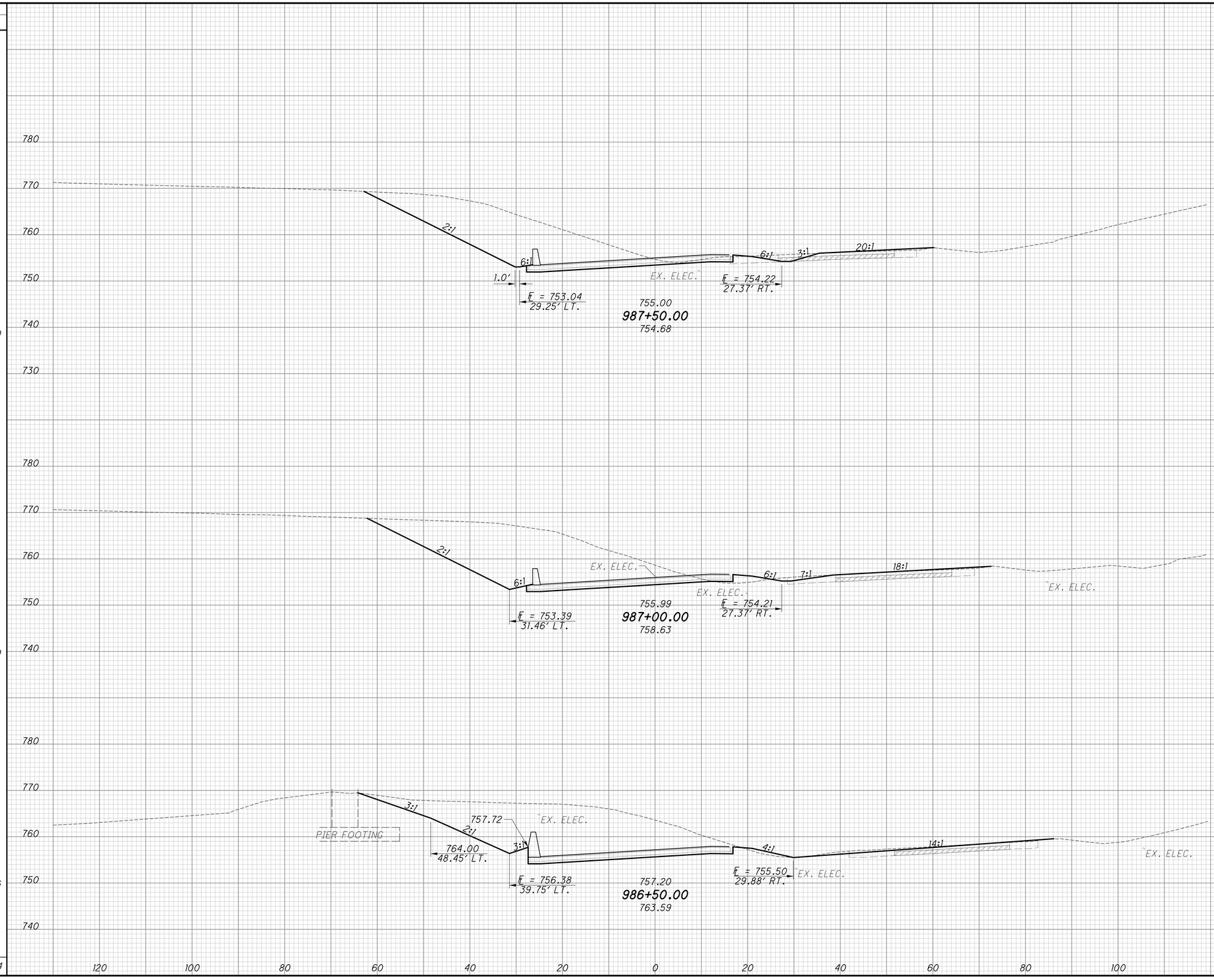

END AREA CUT	END AREA FILL	VOLUME CUT	VOLUME FILL
475	51		
		993	113
597	70		
		1134	121
627	60		
		1019	116
		3146	350

CALCULATED JJR
CHECKED ALL

CROSS SECTIONS - TRANS I-71 S.B.
STA. 986+50.00 TO STA. 987+50.00

FRA-70-14.54

957
2317

ms consultants, inc.

PLOT.CEL

ms consultants, inc.
msconsultants.com

www.msconsultants.com

Ohio DOT Workspace
70\71 East Interchange 2E

Batchplot Spec: \\msconsultants.com\files\production\03\60\06634_2E\standards\plotdrv\batchplt.spc
Pen Table: \\msconsultants.com\files\Standards\ustn\ohdot\V8i\ms\plotting\pen\V8i_ms_std.tbl
Plot Driver: \\msconsultants.com\files\Standards\ustn\ohdot\v8i\ms\plotting\PDF.pltcfg

34" x 22"

Model: XS_SHEET_temporary_model_name
Printed: 6/19/2018 @ 8:57:46 AM By: jdouglas
File: N:\03\60\06634_2E\roadway\sheets\Sheets from 2LMN\77370_XS002(2LMN).dgn

PLOT.CEL

ms consultants, inc.
msconsultants.com

Ohio DOT Workspace
70\71 East Interchange 2E

www.msconsultants.com

0 0.5" 1"

Batchplot Spec: \\msconsultants.com\files\production\03\60\06634_2E\standards\plotdrv\batchplt.spc
Pen Table: \\msconsultants.com\files\Standards\ustn\ohdot\V8\ms\plotting\pen\V8i_ms_std.tbl PDF: ohdotV8i
Plot Driver: \\msconsultants.com\files\Standards\ustn\ohdot\v8\ms\plotting\PDF.pltcfg PCF: 60-06634_2E_Columbus

Model: XS_SHEET_temporary_model_name Cell: FENCE_VIEW1
Printed: 6/19/2018 @ 8:57:47 AM By: jdougas
File: N:\03\60\06634_2E\roadway\sheets\Sheets from 2LMN\77370_XS0020(2LMN).dgn

34" x 22"

SEEDING	
END WIDTH	SQ. YDS.
64	382
73	437
	819

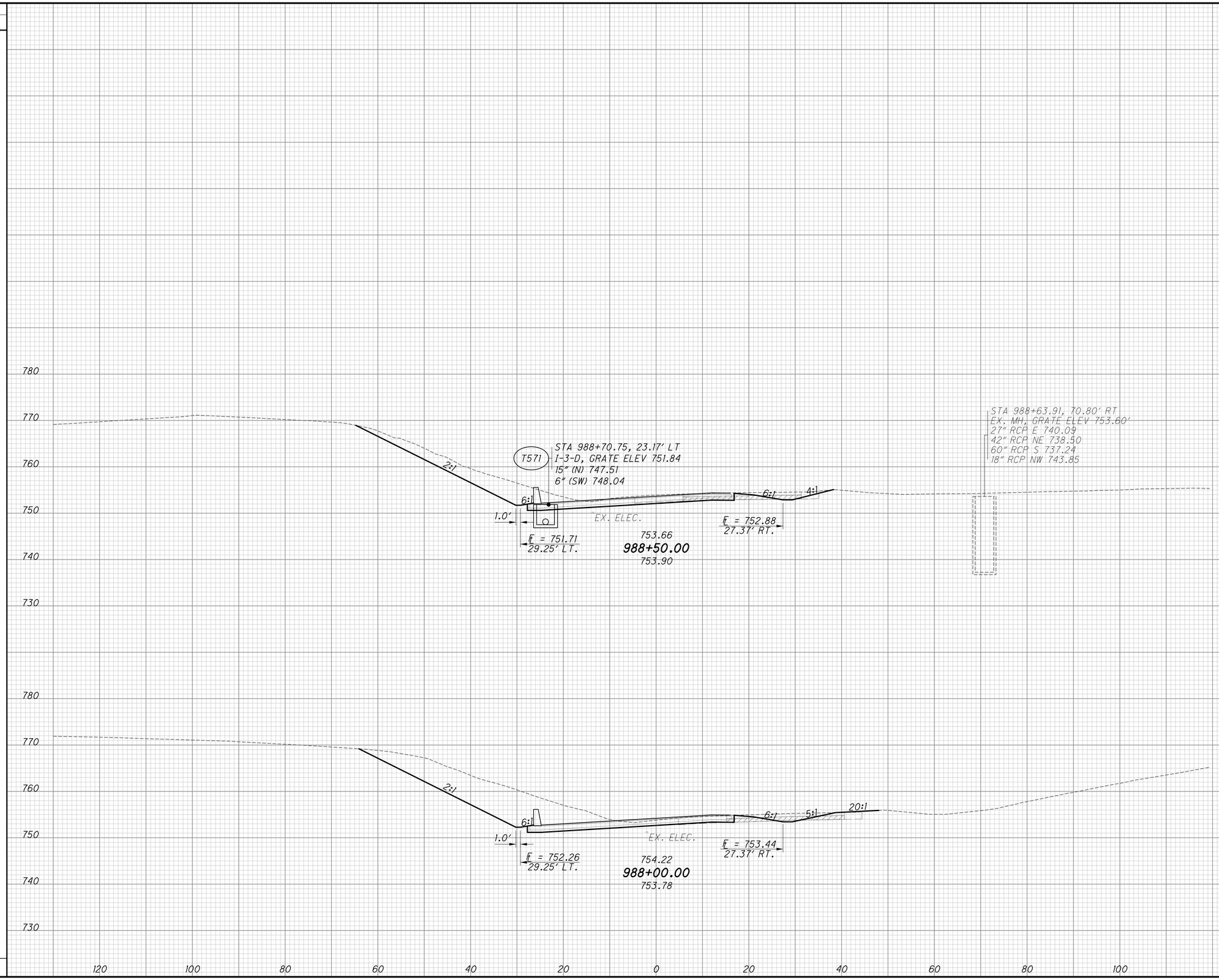

END AREA		VOLUME	
CUT	FILL	CUT	FILL
197	11		
		492	33
334	25		
		749	69
		1241	103

CALCULATED JJR
CHECKED ALL

CROSS SECTIONS - TRANS I-71 S.B.
STA. 988+00.00 TO STA. 988+50.00

FRA-70-14.54

958
2317

PLOT.CEL

ms consultants, inc.
msconsultants.com

Ohio DOT Workspace
70\71 East Interchange 2E

www.msconsultants.com

1"
0.5"
0

Batchplot Spec: \\msconsultants.com\files\production\03\60\06634.2E\standards\plotdrv\batchplt.spc
Pen Table: \\msconsultants.com\files\Standards\ustn\ohdot\V8i\ms\plotting\pen\V8i_ms_std.tbl PCF: ohdot_V8i
Plot Driver: \\msconsultants.com\files\Standards\ustn\ohdot\V8i\ms\plotting\PDF.pltcfg PCF: 60-06634_2E_Columbus

34" x 22"

Model: XS_SHEET_temporary_model_name(s): FENCE_VIEW1
Printed: 6/19/2018 @ 8:57:48 AM By: jdouglas
File: N:\03\60\06634_2E\roadway\sheets\Sheets from 2LMN\77370_XS002(2LMN).dgn

SEEDING	
END WIDTH	SQ. YDS.
	38
	266
	58
	339
	605

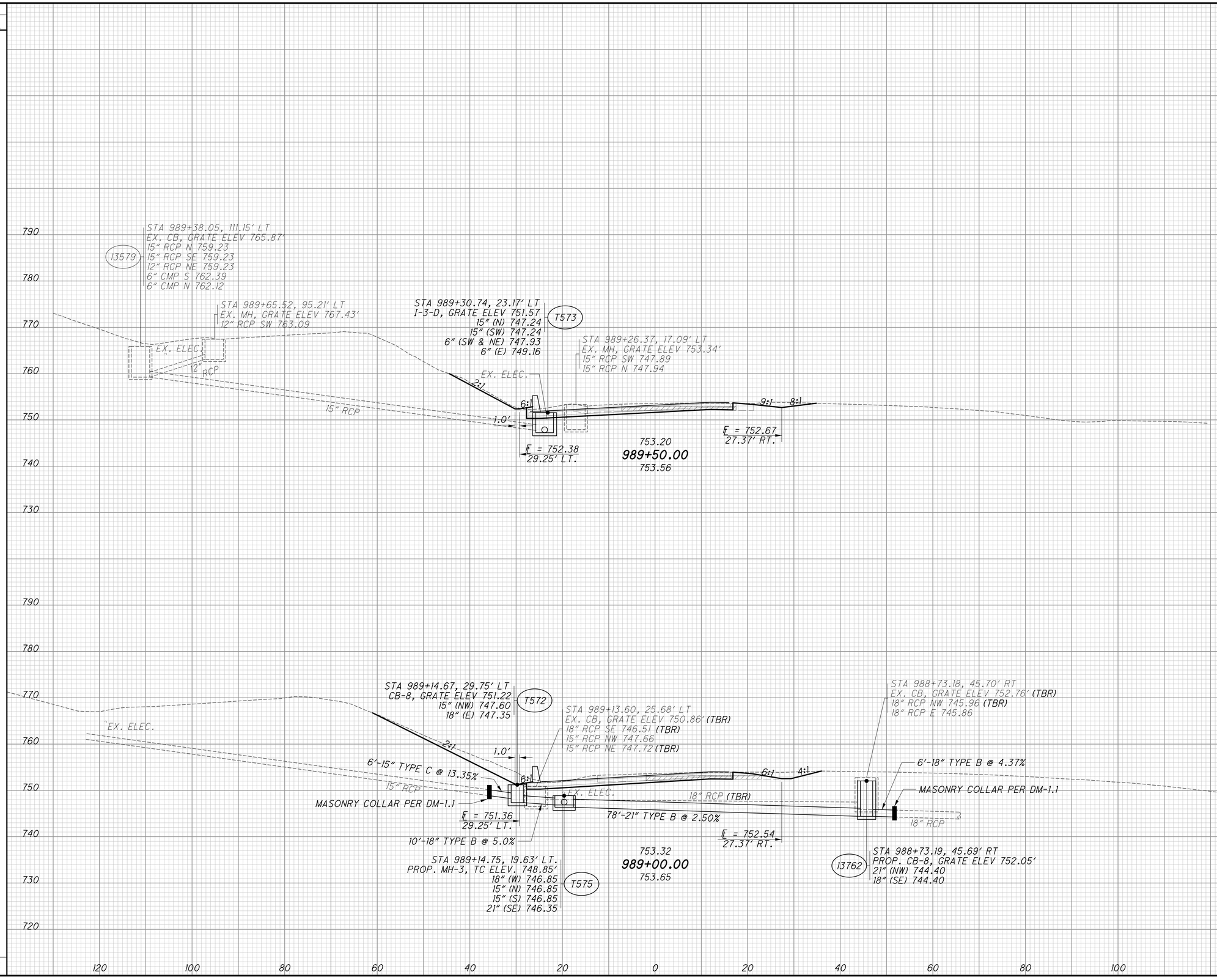

END AREA		VOLUME	
CUT	FILL	CUT	FILL
90	7		
197	16		
123	10		
296	19		
493	35		

CALCULATED JJR
CHECKED ALL

CROSS SECTIONS - TRANS I-71 S.B.
STA. 989+00.00 TO STA. 989+50.00

FRA-70-14.54

959
2317

PLOT.CEL

ms consultants, inc.
msconsultants.com

Ohio DOT Workspace
70\71 East Interchange 2E
www.msconsultants.com

Batchplot Spec: \\msconsultants.com\files\production\03\60\06634_2E\standards\plotdrv\batchplt.spc
Pen Table: \\msconsultants.com\files\Standards\ustn\ohdot\V8i\ms\plotting\pen\V8i_ms_std.tbl
Plot Driver: \\msconsultants.com\files\Standards\ustn\ohdot\v8i\ms\plotting\PDF.pltcfg

34" x 22"

Model: XS_SHEET_temporary_model_name
Printed: 6/19/2018 @ 8:57:49 AM
File: N:\03\60\06634_2E\roadway\sheets\Sheets from 2LMN\77370_XS002(2LMN).dgn
Title: FENCE_VIEW1
By: jdouglas

SEEDING END WIDTH	SEEDING SQ. YDS.
9	
	105
29	
	187
	292

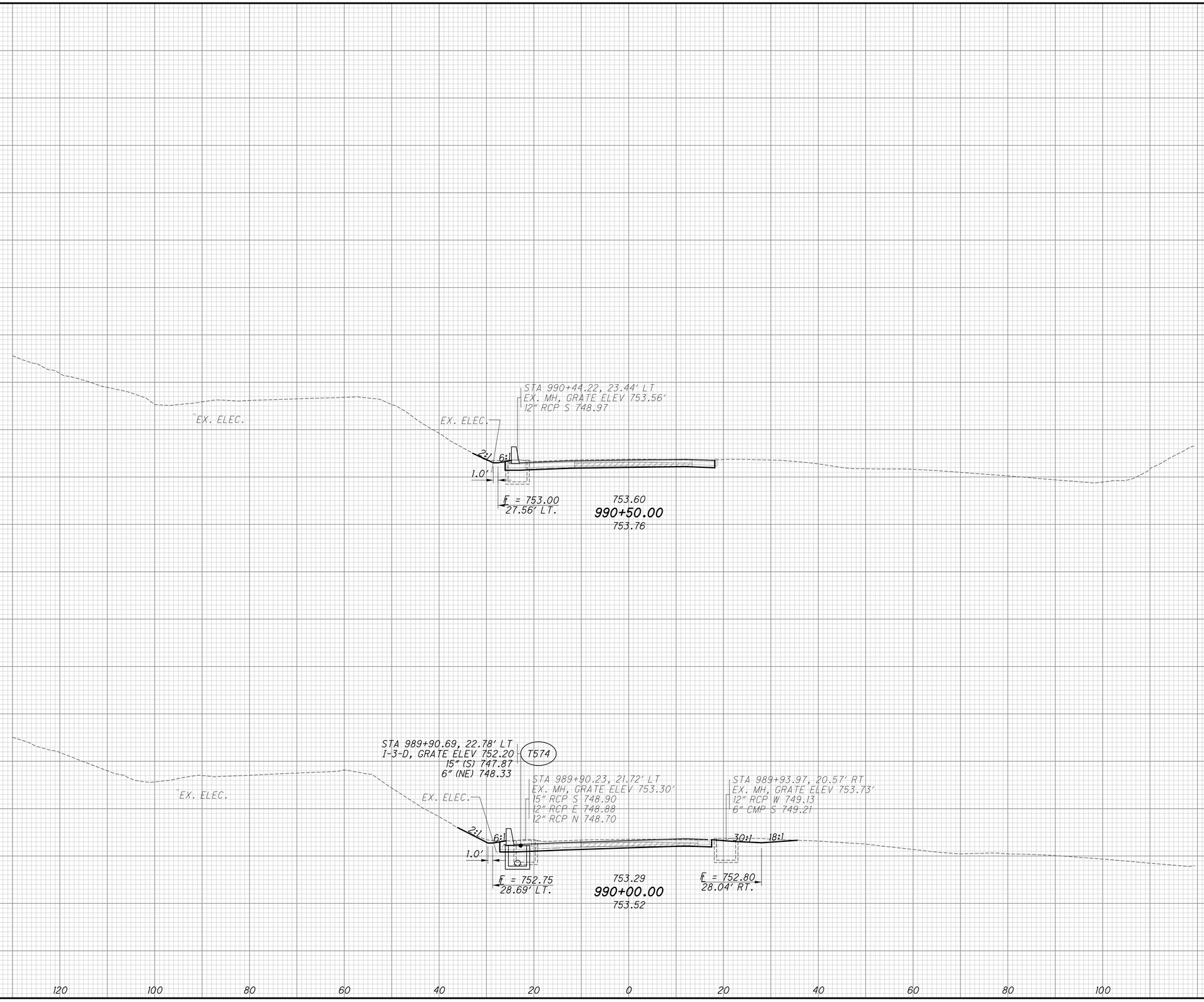

END AREA CUT	END AREA FILL	VOLUME CUT	VOLUME FILL
57	0		
		123	2
76	2		
		154	9
		277	11

CALCULATED JJR
CHECKED ALL

CROSS SECTIONS - TRANS I-71 S.B.
STA. 990+00.00 TO STA. 990+50.00

FRA-70-14.54

960
2317

ms consultants, inc.

PLOT.CEL

ms consultants, inc.
msconsultants.com

www.msconsultants.com

Ohio DOT Workspace
70\71 East Interchange 2E

0 1" 0.5"

PDF: ohdot\V8i
PDF: 60-06634_2E_Columbus

Batchplot Spec: \\msconsultants.com\Files\Production\03\60\06634_2E\standards\plotdir\batchplt.spc
Pen Table: \\msconsultants.com\Files\Standards\usth\ohdot\V8i\ms\plotting\pen\V8i_ms_std.tbl
Plot Driver: \\msconsultants.com\Files\Standards\usth\ohdot\V8i\ms\plotting\PDF.pltcfg

Model: XS_SHEET_temporary_model_name
Printed: 6/19/2018 @ 8:57:50 AM
File: N:\03\60\06634_2E\roadway\Sheets\Sheets from 2LMN\77370_XS002(2LMN).dgn

Use: FENCE_VIEW1
By: jdouglas

34" x 22"

SEEDING END WIDTH	SEEDING SQ. YDS.	END AREA CUT	END AREA FILL	VOLUME CUT	VOLUME FILL
8	69	56	0	155	1
	22			51	0
8	47	55	0	104	1

CALCULATED JJR
CHECKED ALL

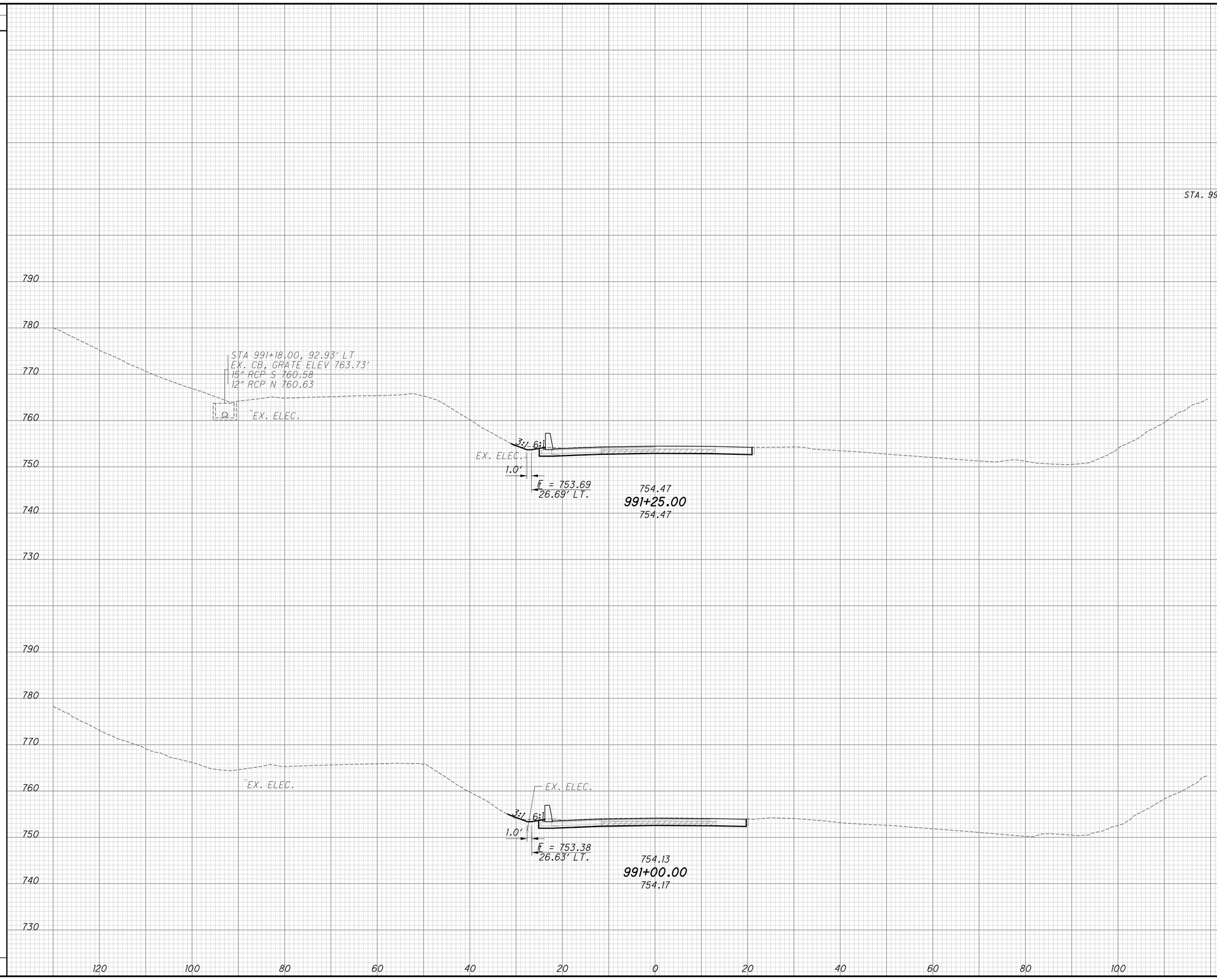

CROSS SECTIONS - TRANS I-71 S.B.
STA. 991+00.00 TO STA. 991+25.00

FRA-70-14.54

961
2317

ms consultants, inc.

PLOT.CEL

ms consultants, inc.
msconsultants.com

www.msconsultants.com

Ohio DOT Workspace
70\71 East Interchange 2E

1" 0.5" 0

DCF: ohdot1V8i
PCF: 60-06634_2E_Columbus

34" x 22"

Batchplot Spec: \\msconsultants.com\files\production\03\60\06634_2E\standards\plotdrv\batchplt.spc
Pen Table: S:\stn\plotting\usstn\V8i\pen\V8i_ms_std.tbl
Plot Driver: \\msconsultants.com\files\Standards\usstn\ohdot1\v8i\ms\plotting\PDF.pltdrv

Model: XS_SHEET_301+00.00_TO_302+00.00 Ver: FENCE_VIEW1
Printed: 6/19/2018 @ 8:57:56 AM By: jdouglas
File: \\msconsultants.com\Files\Production\03\60\06634_2E\roadway\sheets\105322XS502.dgn

SEEDING	
END WIDTH	SQ. YDS.
40	208
35	253
56	461

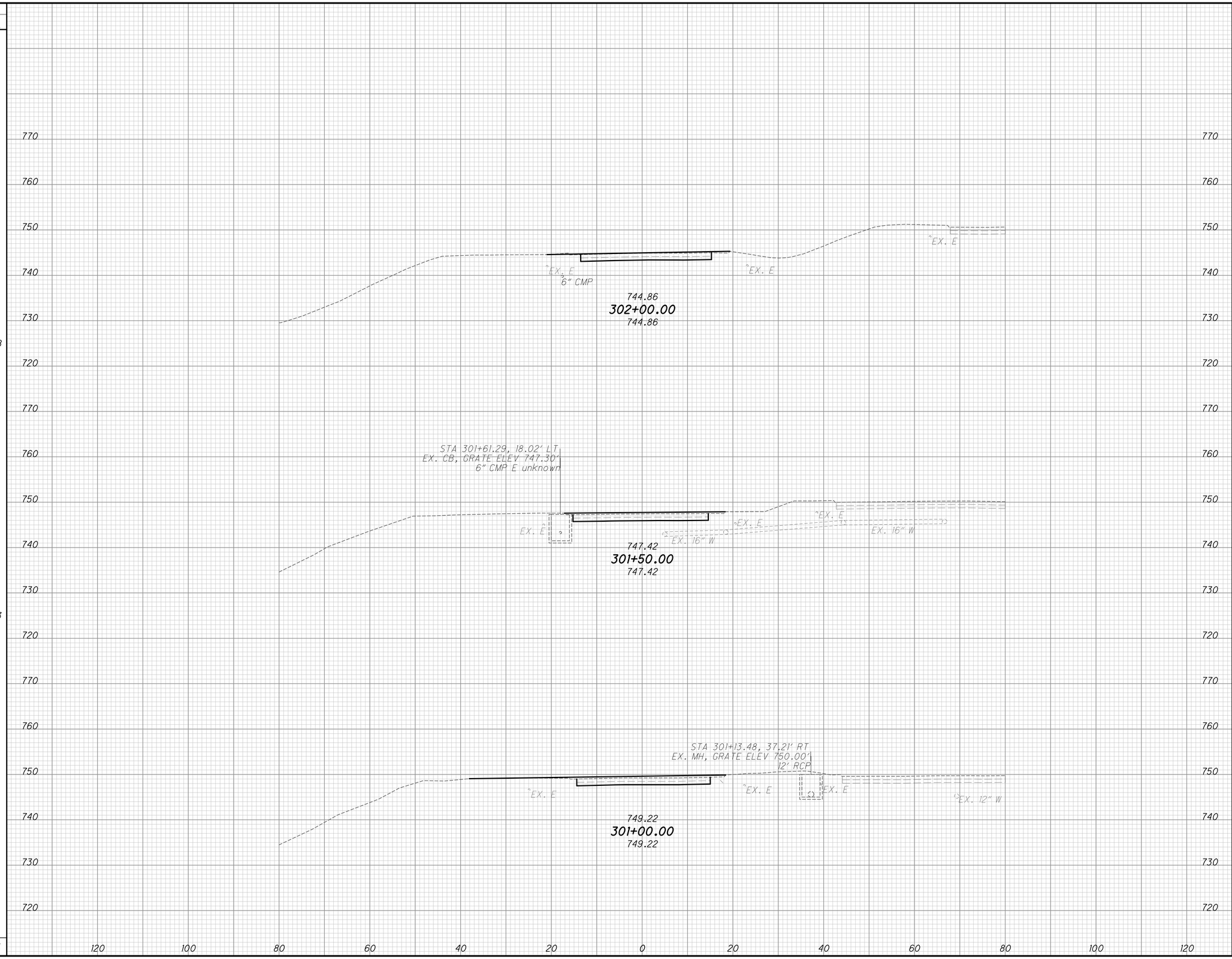

END AREA		VOLUME	
CUT	FILL	CUT	FILL
1	49		
0	56		
		0	106
0	59		
		1	97
		1	203

CALCULATED JDD
CHECKED HRB

CROSS SECTIONS THIRD ST. TO I-70 EB RAMP
STA. 301+00.00 TO STA. 302+00.00

FRA-70-14.54

961A
2317

PLOT.CEL

ms consultants, inc.
msconsultants.com

Ohio DOT Workspace
70\71 East Interchange 2E

www.msconsultants.com

1"
0.5"
0

ODF: ohdot\V8i
PCF: 60-06634_2E_Columbus

34" x 22"

Batchplot Spec: \\msconsultants.com\files\production\03\60\06634_2E\standards\plotdrv\batchplt.spc
Pen Table: S:\std\plotting\austin\V8i\pen\V8i_ms_std.tbl
Plot Driver: \\msconsultants.com\files\Standards\austin\ohdot\v8i\ms\plotting\PDF.pltcfg

Model: XS_SHEET_302+50.00_TO_303+50.00
Printed: 6/19/2018 @ 8:57:57 AM
File: \\msconsultants.com\files\Production\03\60\06634_2E\roadway\sheets\105322XS502.dgn
Cell: FENCE_VIEW1
By: jdougas

SEEDING END WIDTH	SEEDING SQ. YDS.
30	175
33	189
35	208
	572

END AREA CUT	END AREA FILL	VOLUME CUT	VOLUME FILL
0	46		
		0	86
0	47		
		0	91
0	51		
		1	93
		1	270

CALCULATED JDD
CHECKED HRB

CROSS SECTIONS THIRD ST. TO I-70 EB RAMP
STA. 302+50.00 TO STA. 303+50.00

FRA-70-14.54

961B
2317

34" x 22"

Model: XS_SHEET_304+00.00_TO_305+50.00 View: FENCE_VIEW1
Printed: 6/19/2018 @ 8:57:58 AM By: jdouglas
File: \\msconsultants.com\files\Production\03\60\06634_2E\roadway\sheets\105322XS502.dgn

Batchplot Spec: \\msconsultants.com\files\production\03\60\06634_2E\standards\plotdrv\batchplt.spc
Pen Table: S:\std\plotting\ustn\V8i\pen\V8i_ms_std.tbl
Plot Driver: \\msconsultants.com\files\Standards\ustn\ohdot\v8i\ms\plotting\PDF.pltcfg

0 1" 0.5"
DGF: ohdotV8i
PCF: 60-06634_2E_Columbus

Ohio DOT Workspace
70\71 East Interchange 2E

PLOT.CEL
ms consultants, inc.
msconsultants.com
www.msconsultants.com

SEEDING

STA	END WIDTH	SQ. YDS.
304+00.00	28	161
304+50.00	30	161
305+00.00	25	156
305+50.00	24	139

304+00.00
735.38
EX. E
735.38

304+50.00
734.12
EX. E
734.12
EX. 24" W

305+00.00
733.28
EX. E
733.28

305+50.00
732.61
EX. E
732.61
STA 305+61.99, 10.70' RT
EX. CB, GRATE ELEV 731.97
12" RCP E 728.42

STA	END AREA CUT	END AREA FILL	VOLUME CUT	VOLUME FILL
304+00.00	0	43	0	82
304+50.00	0	40	0	77
305+00.00	0	36	0	70
305+50.00	0	34	0	65

961C
2317

FRA-70-14.54

CROSS SECTIONS THIRD ST. TO I-70 EB RAMP
STA. 304+00.00 TO STA. 305+50.00

CALCULATED JDD
CHECKED HRB

ms consultants, inc.

PLOT.CEL

ms consultants, inc.
msconsultants.com

www.msconsultants.com

Ohio DOT Workspace
70\71 East Interchange 2E

0 0.5" 1"

PCF: 60-06634_2E_Columbus
ODF: ohdot\V8i

34" x 22"

Batchplot Spec: \\msconsultants.com\files\production\03\60\06634_2E\standards\plotdrv\batchplt.spc
Pen Table: S:\std\plotting\ustn\V8i\pen\V8i_ms_std.tbl
Plot Driver: \\msconsultants.com\files\Standards\ustn\ohdot\v8i\ms\plotting\PDF.pltcfg

Model: XS_SHEET_306-00.00_TO_307-50.00
Printed: 6/19/2018 @ 8:57:59 AM
File: \\msconsultants.com\files\Production\03\60\06634_2E\roadway\sheets\105322XS502.dgn
User: FENCE_VIEW1
By: jdougas

SEEDING END WIDTH	SEEDING SQ. YDS.
22	122
22	128
24	131
23	131
	512

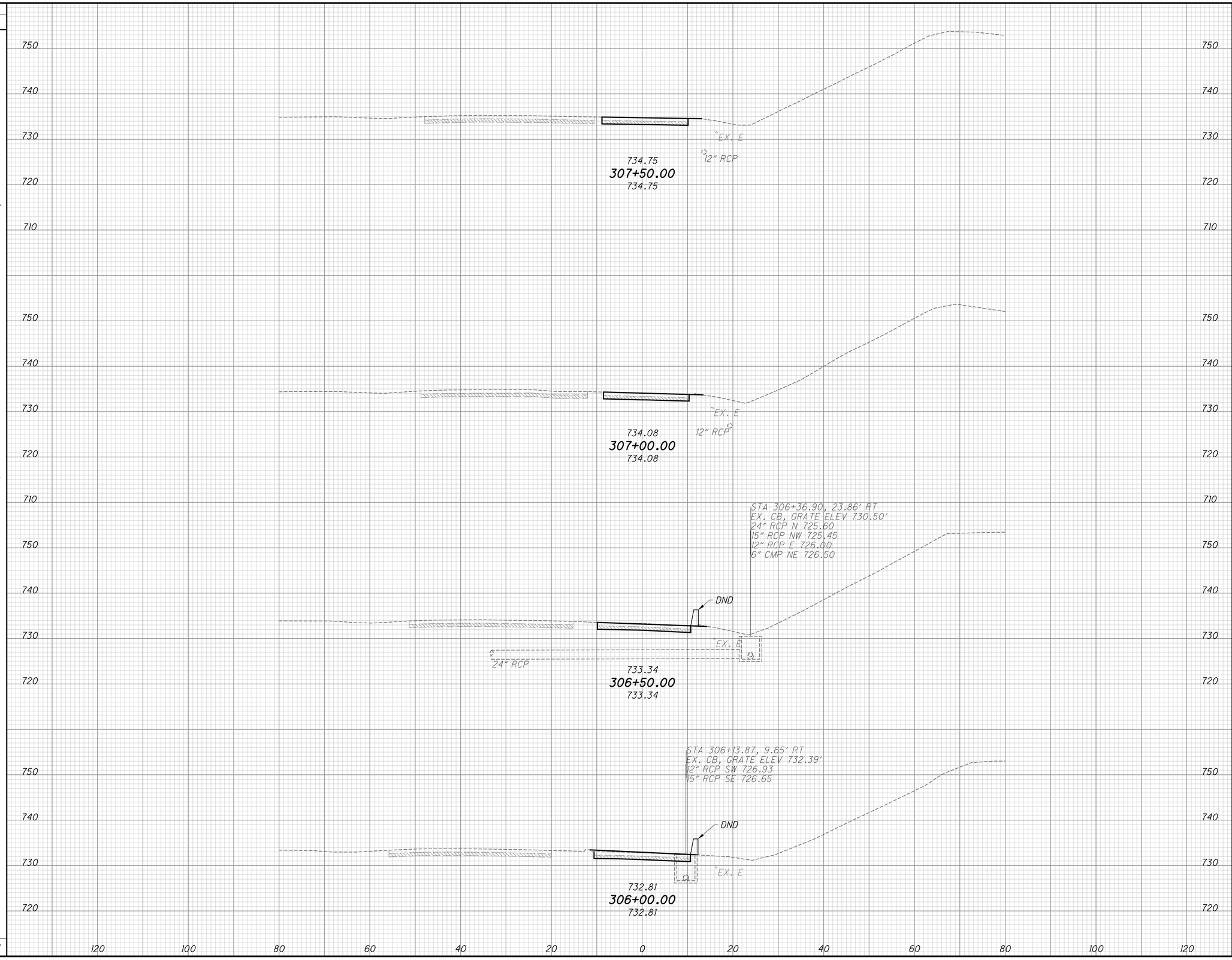

END AREA CUT	END AREA FILL	VOLUME CUT	VOLUME FILL
0	28	0	52
0	28	1	53
1	29	1	59
0	35	0	64
		2	228

CALCULATED JDD
CHECKED HRB

CROSS SECTIONS THIRD ST. TO I-70 EB RAMP
STA. 306+00.00 TO STA. 307+50.00

FRA-70-14.54

961D
2317

SEEDING	
END WIDTH	SQ. YDS.

FOR SEEDING AND MULCHING QUANTITIES REFER TO THE LANDSCAPE PLANTING PLANS

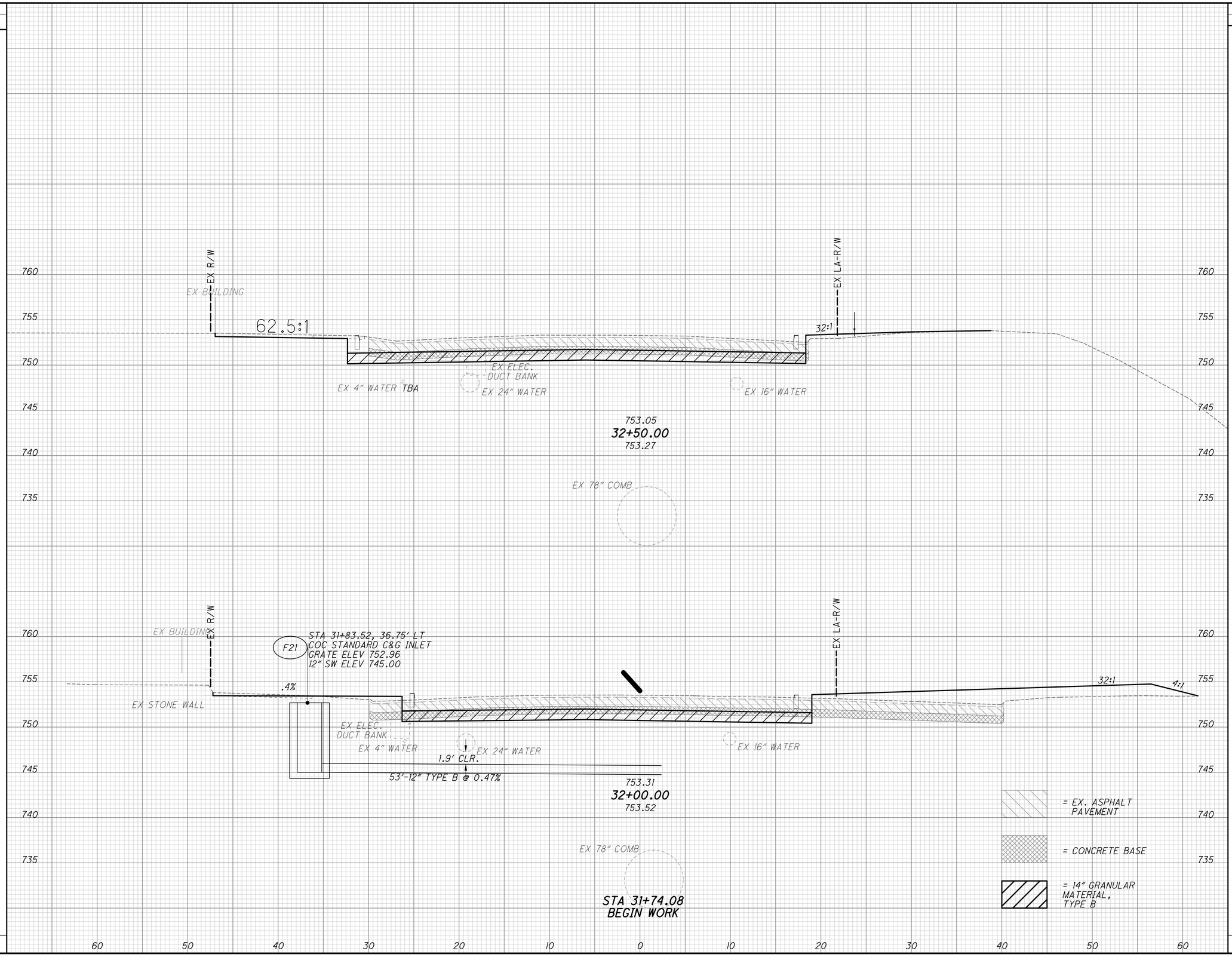

END AREA		VOLUME	
CUT	FILL	CUT	FILL
68	5		
		144	9
87	102		
		84	98
87	102		
		228	107

CALCULATED AMF
CHECKED CSR

CROSS SECTIONS FULTON ST.
STA. 32+00.00 TO STA. 32+50.00

FRA-70-15.54

962
2317

6/19/2018
8:15:26 AM
N:\125601\06634.2E\ROADWAY\SHEETS\1589-1601_105322XS004.DGN

SEEDING	
END WIDTH	SQ. YDS.

FOR SEEDING AND MULCHING QUANTITIES REFER TO THE LANDSCAPE PLANTING PLANS

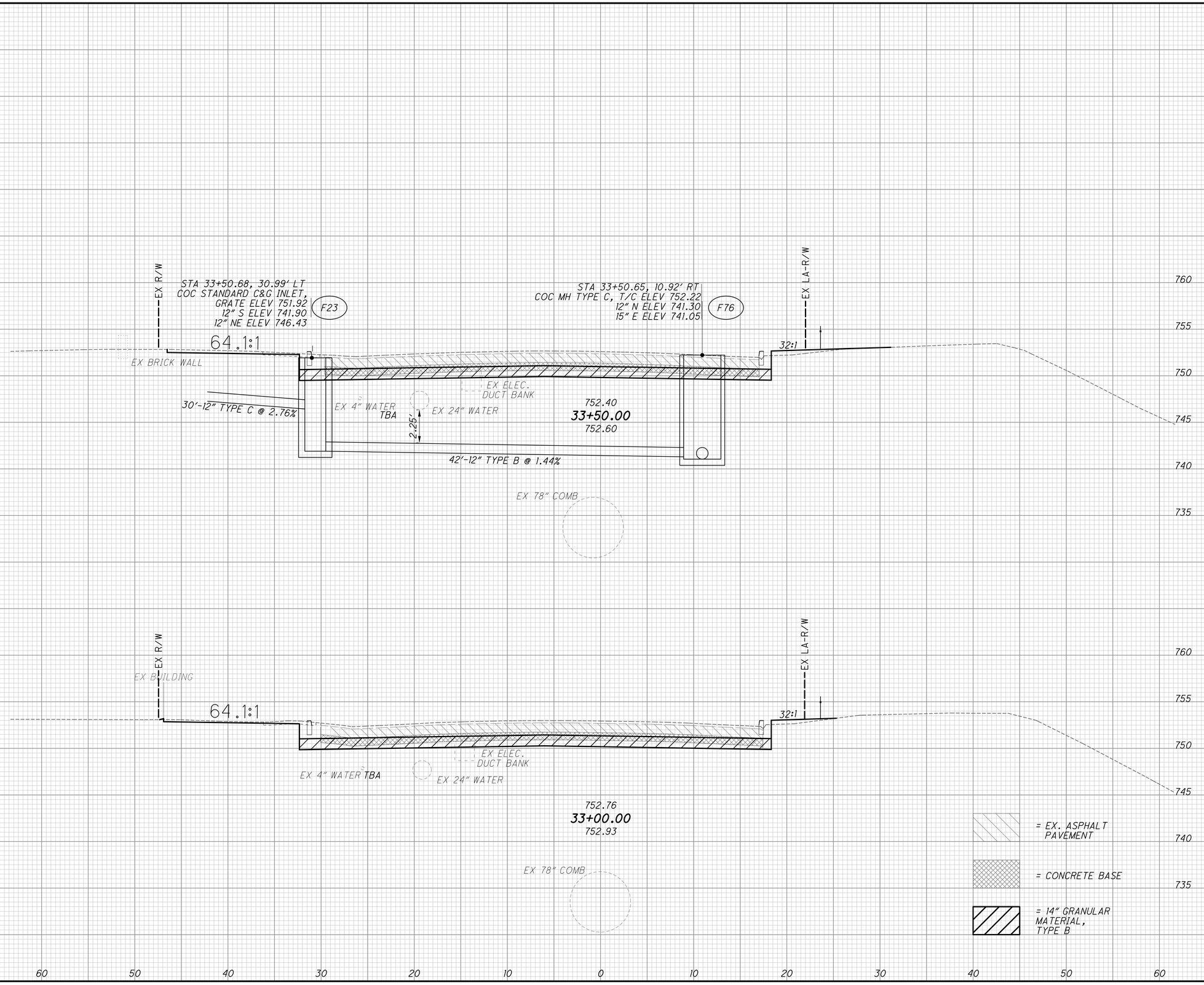

END AREA		VOLUME	
CUT	FILL	CUT	FILL
67	3		
		123	6
66	3		
		124	7
		247	13

CALCULATED AMF
CHECKED CSR

CROSS SECTIONS FULTON ST.
STA. 33+00.00 TO STA. 33+50.00

FRA-70-15.54

963
2317

6/19/2018
8:58:07 AM
N:\03\60\06634_2E\ROADWAY\SHEETS\1589-1601_105322XS004.DGN

SEEDING	
END WIDTH	SQ. YDS.

FOR SEEDING AND MULCHING QUANTITIES REFER TO THE LANDSCAPE PLANTING PLANS

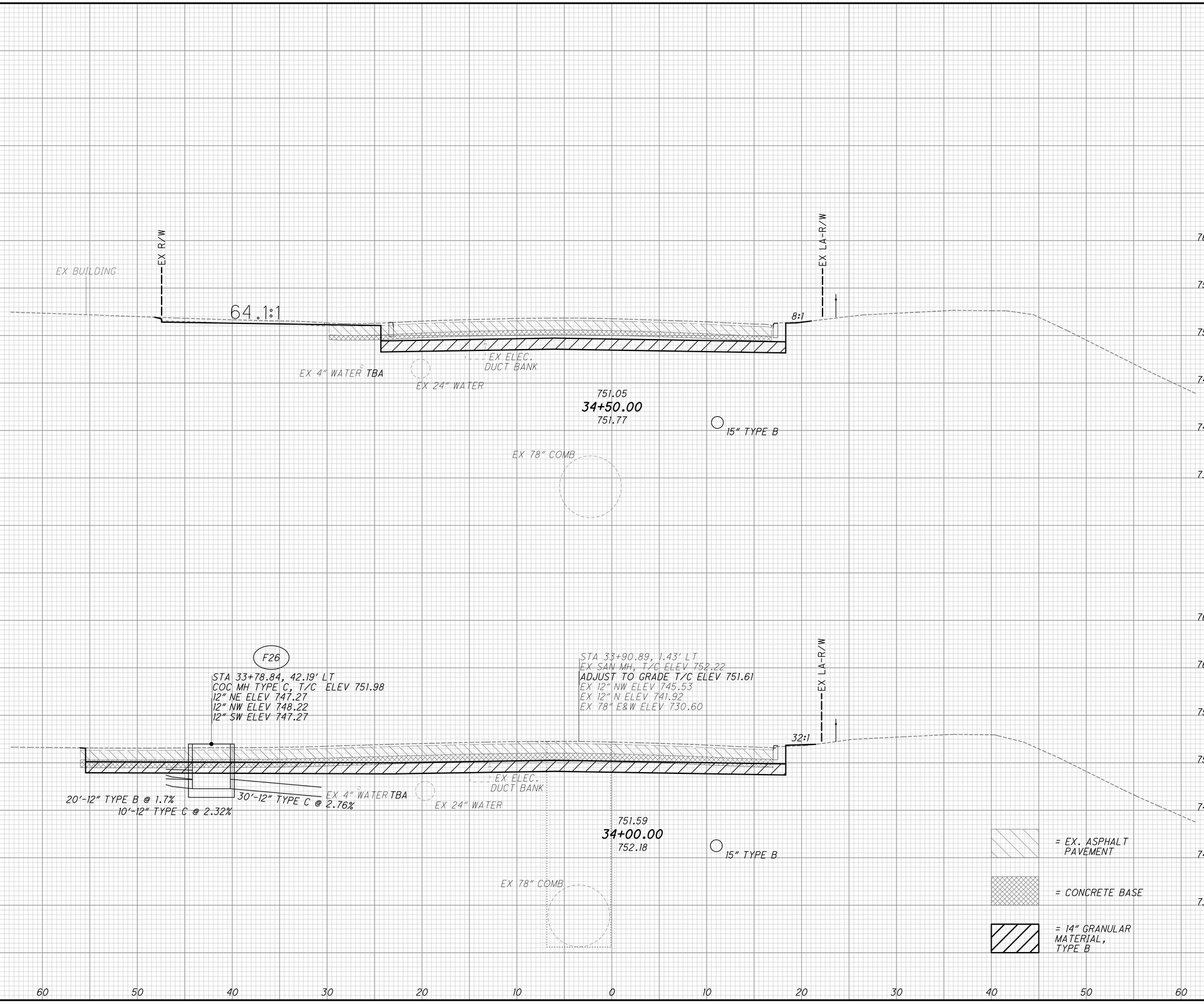

END AREA		VOLUME	
CUT	FILL	CUT	FILL
74	9		
		155	10
94	1		
		149	4
		304	14

CALCULATED AMF
CHECKED CSR

CROSS SECTIONS FULTON ST. STA. 34+00.00 TO STA. 34+50.00

FRA-70-15.54

964
2317

6/19/2018
8:58:28 AM
N:\125601\06634.2E\ROADWAY\SHEETS\1589-1601_105322XS004.DGN

SEEDING	
END WIDTH	SQ. YDS.

FOR SEEDING AND MULCHING QUANTITIES REFER TO THE LANDSCAPE PLANTING PLANS

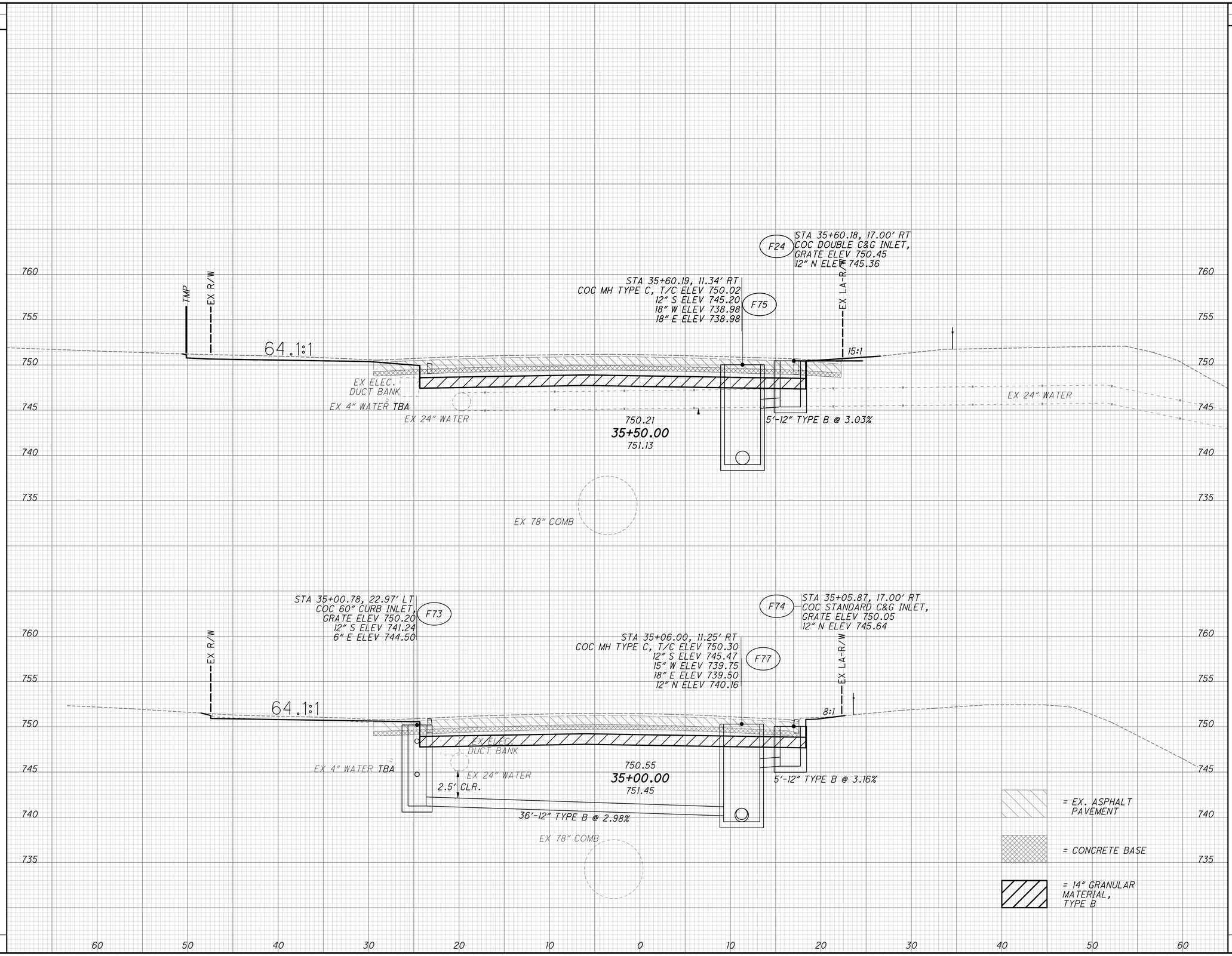

END AREA		VOLUME	
CUT	FILL	CUT	FILL
95	14		
		162	20
80	8		
		142	16
		304	36

CALCULATED AMF
CHECKED CSR

CROSS SECTIONS FULTON ST.
STA. 35+00.00 TO STA. 35+50.00

FRA-70-15.54

6/19/2018
8:58:09 AM
N:\03\60\06634_2E\ROADWAY\SHEETS\1589-1601_105322XS004.DGN

SEEDING	
END WIDTH	SQ. YDS.

FOR SEEDING AND MULCHING QUANTITIES REFER TO THE LANDSCAPE PLANTING PLANS

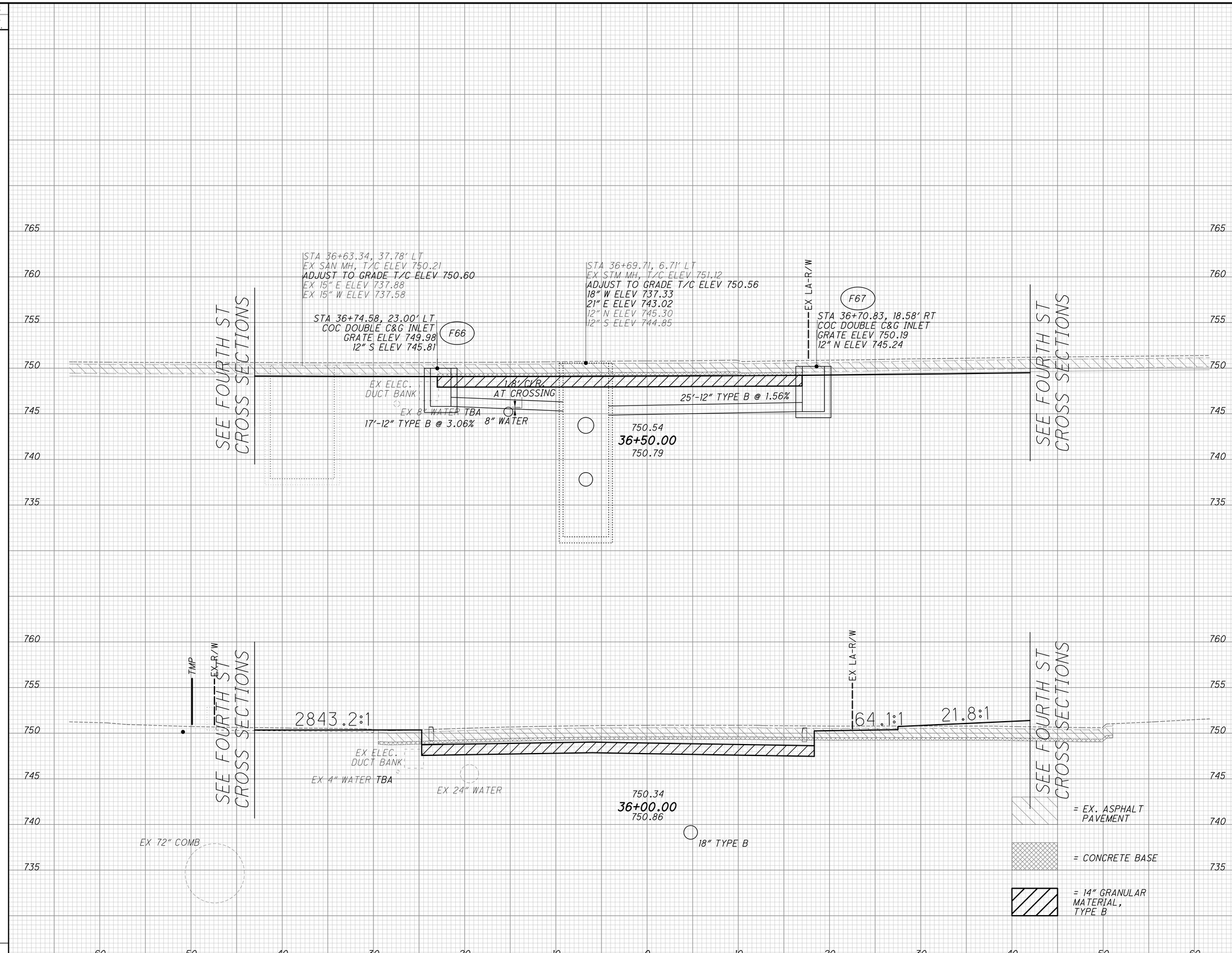

END AREA		VOLUME	
CUT	FILL	CUT	FILL
111	1		
		199	44
104	46		
		185	56
		384	100

CALCULATED AMF
CHECKED CSR

CROSS SECTIONS FULTON ST.
STA. 36+00.00 TO STA. 36+50.00

FRA-70-15.54

966
2317

6/19/2018
8:58:10 AM
N:\03\60\06634_2E\ROADWAY\SHEETS\1589-1601_105322XS004.DGN

FOR SEEDING AND MULCHING QUANTITIES REFER TO THE LANDSCAPE PLANTING PLANS

SEEDING	
END WIDTH	SQ. YDS.

END AREA		VOLUME	
CUT	FILL	CUT	FILL
102	14		
		169	37
80	26		
		177	25
		346	62

CALCULATED AMF
CHECKED CSR

CROSS SECTIONS FULTON ST.
STA. 37+00.00 TO STA. 38+00.00

FRA-70-15.54

967
2317

760
755
750
745
740

TMP
EX R/W
EX LA-R/W

STA 37+28.65, 30.99' LT
COC DOUBLE C&G INLET,
GRATE ELEV 750.36
12" W ELEV 744.21
15" S ELEV 743.96
F33

STA 37+29.07, 13.06' LT
COC MH TYPE C, T/C ELEV 750.83
21" W ELEV 743.53
12" S ELEV 744.21
15" N ELEV 743.78
F32

EX 8" WATER
TBA
EX ELEC. DUCT BANK
8" WATER
15"
12"
21" TYPE B
751.12
37+50.00
751.68
EX 15" SAN
EX 48" COMB

SEE FOURTH ST CROSS SECTIONS

STA 37+09.04, 29.28' LT
COC MH TYPE C, T/C ELEV 750.88
ATG T.C. = 751.01
12" N ELEV 744.73
12" E ELEV 744.73
F22

F69
STA 37+21.04, 17.00' RT
COC DOUBLE C&G INLET
GRATE ELEV 750.32
12" N ELEV 744.95

8.5:1
EX ELEC. DUCT BANK
12"
EX 8" WATER (ABANDONED)
EX. 8" WATER
750.59
37+00.00
751.16
EX 15" SAN
EX 48" COMB

= ITEM 203 EXCAVATION FOR WALL CONSTRUCTION
= EX. ASPHALT PAVEMENT
= CONCRETE BASE
= 14" GRANULAR MATERIAL, TYPE B

60 50 40 30 20 10 0 10 20 30 40 50 60

6/19/2018
6:51:11 AM
N:\GIS\160\06634_2E\ROADWAY\SHEETS\1589-1601_105322XS004.DGN

PLOT.CEL

ms consultants, inc.
msconsultants.com

Ohio DOT Workspace
70\71 East Interchange 2E

www.msconsultants.com

Batchplot Spec: \\msconsultants.com\files\production\03\60\06634_2E\standards\plotdir\batchplt.spc
Pen Table: \\msconsultants.com\files\Standards\usitn\ohdot\V8i\ms\plotting\pen\V8i_ms_std.tbl
Plot Driver: \\msconsultants.com\files\Standards\usitn\ohdot\v8i\ms\plotting\PDF.pltcfg

PDF: ohdotV8i
DGNLIB: 60-06634_2E_Columbus

0 1" 0.5"

34" x 22"

View: FENCE_VIEW1
By: jdouglas

Model: Sheet
Printed: 6/19/2018 @ 8:58:13 AM
File: N:\03\60\06634_2E\roadway\sheets\06322KS517.dgn

SEEDING	
END WIDTH	SQ. YDS.
86	377
	0
	377

END AREA		VOLUME	
CUT	FILL	CUT	FILL
56	1156		
97	2084		
49	1095		
0	0		
97	2084		

CALCULATED MAH
CHECKED BSB

CROSS SECTIONS MOOBERRY ST.
STA. 888+50.00 TO STA. 889+00.00

FRA-70-14.54

968
2317

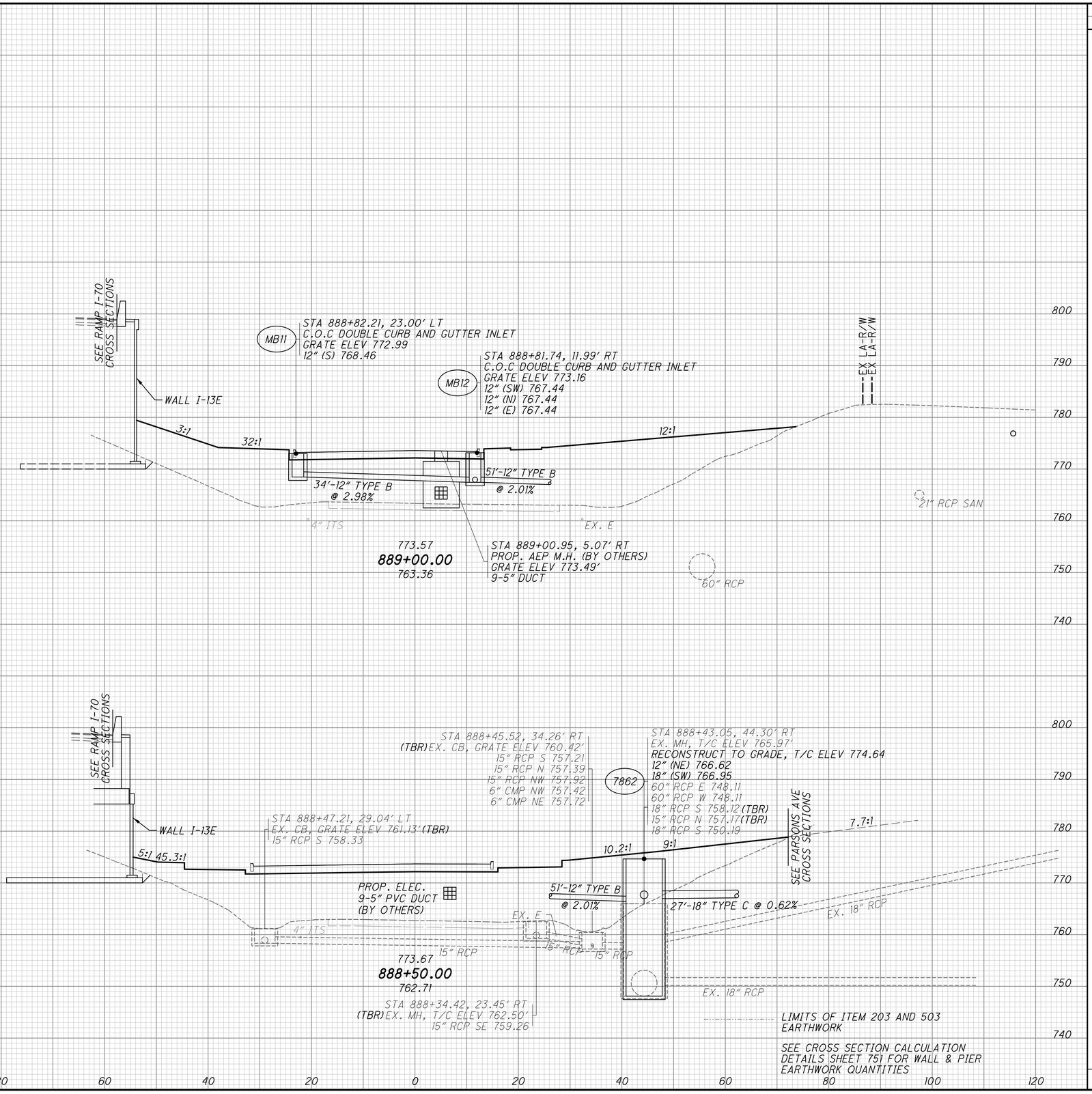

PLOT.CEL

ms consultants, inc.
msconsultants.com

Ohio DOT Workspace
70\71 East Interchange 2E

www.msconsultants.com

0 0.5" 1"

Batchplot Spec= \\msconsultants.com\files\production\03\60\06634_2E\standards\plotdrv\batchplt.spc
Pen Table= \\msconsultants.com\files\Standards\ustn\ohdot\V8i\ms\plotting\pen\V8i_ms_std.tbl
Plot Driver= \\msconsultants.com\files\Standards\ustn\ohdot\v8i\ms\plotting\PDF.pltcfg
PDF: ohdotV8i
DGN: 60-06634_2E_Columbus

Model: Sheet
Printed: 6/19/2018 @ 8:58:14 AM
File= N:\03\60\06634_2E\roadway\sheets\105322X1568.dgn
View: FENCE_VIEW1
By: jdouglas

34" x 22"

SEEDING	
END WIDTH	SQ. YDS.
65	914
89	486
	428

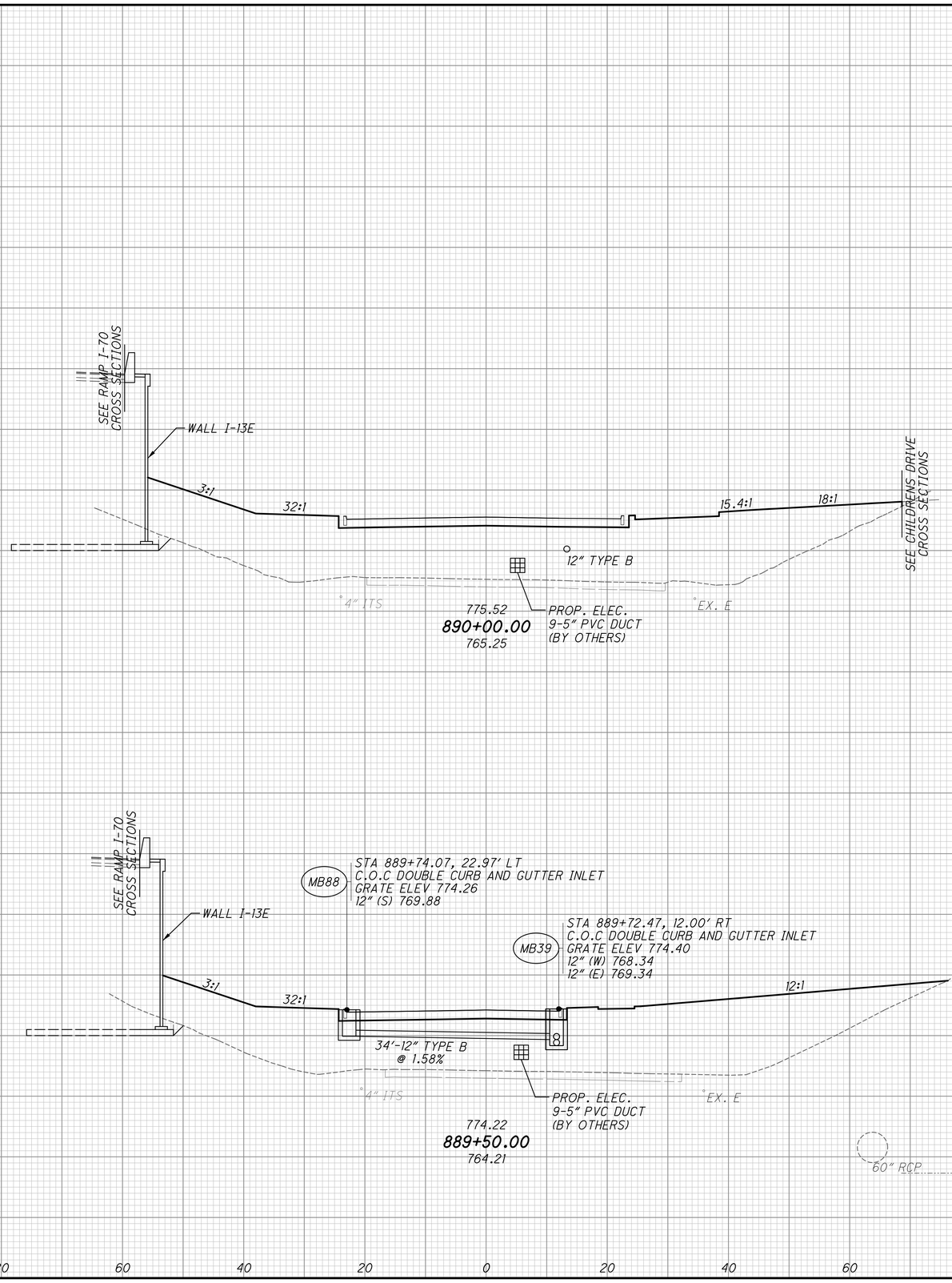

END AREA		VOLUME	
CUT	FILL	CUT	FILL
63	1153		
		115	2168
62	1188		
		109	2171
		224	4339

CALCULATED MAH
CHECKED BSB

CROSS SECTIONS MOOBERRY ST.
STA. 889+50.00 TO STA. 890+00.00

FRA-70-14.54

969
2317

ms consultants, inc.

PLOT.CEL

ms consultants, inc.
msconsultants.com

Ohio DOT Workspace
70\71 East Interchange 2E

www.msconsultants.com

Batchplot Spec: \\msconsultants.com\Files\production\03\60\06634.2E\standards\plotdrv\batchplt.spc
Pen Table: \\msconsultants.com\Files\Standards\ustn\ohdot\V8i\ms\plotting\pen\V8i_ms_std.tbl
Plot Driver: \\msconsultants.com\Files\Standards\ustn\ohdot\v8i\ms\plotting\PDF.pltcfg

Model: Sheet
Printed: 6/19/2018 @ 8:56:15 AM
File: N:\03\60\06634.2E\roadway\sheets\105322X3159.dgn
View: FENCE_VIEW1
By: jdouglas

34" x 22"

SEEDING	
END WIDTH	SQ. YDS.
83	336
	287
	623

END AREA		VOLUME	
CUT	FILL	CUT	FILL
99	36		
		186	1073
		101	1123
		152	2108
		338	3181

CALCULATED MAH
CHECKED BSB

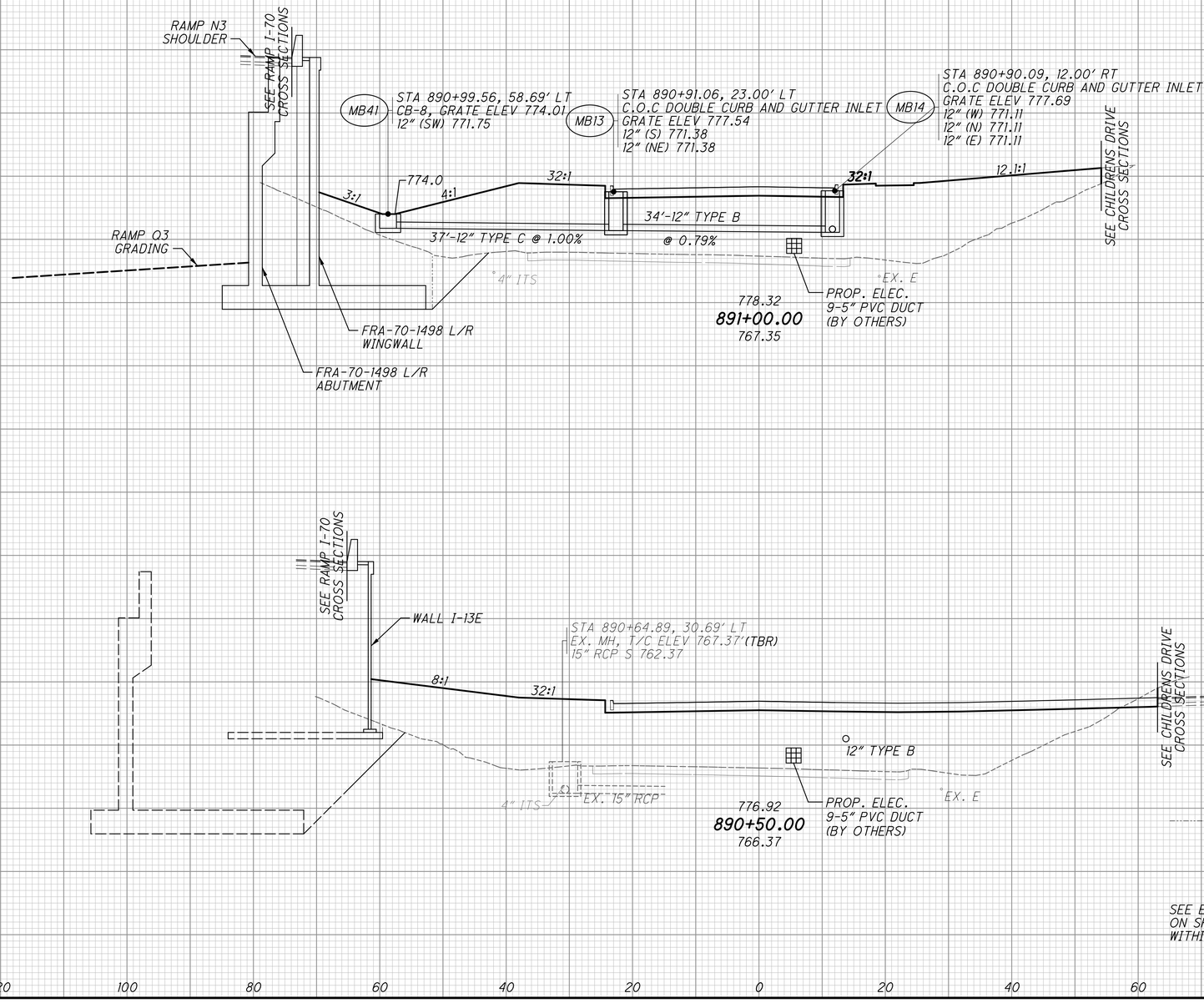

CROSS SECTIONS MOOBERRY ST. STA. 890+50.00 TO STA. 891+00.00

FRA-70-14.54

970
2317

PLOT.CEL

ms consultants, inc.
msconsultants.com

www.msconsultants.com

Ohio DOT Workspace
70\71 East Interchange 2E

PCF: ohdot1V8i
PCF: 60-06634_2E_Columbus

Batchplot Spec: \\msconsultants.com\files\production\Q3\60\06634_2E\standards\plotdrv\batchplt.spc
Pen Table: \\msconsultants.com\files\Standards\usth\ohdot\V8i\ms\plotting\pen\V8i_ms_std.tbl
Plot Driver: \\msconsultants.com\files\Standards\usth\ohdot\v8i\ms\plotting\PDF.pltcfg

Model: Sheet
Printed: 6/19/2018 @ 8:58:17 AM
File: N:\03\60\06634_2E\roadway\sheets\05322XS520.dgn
View: FENCE_VIEW1
By: jdouglas

34" x 22"

SEEDING	
END WIDTH	SQ. YDS.
47	329
	428
71	757

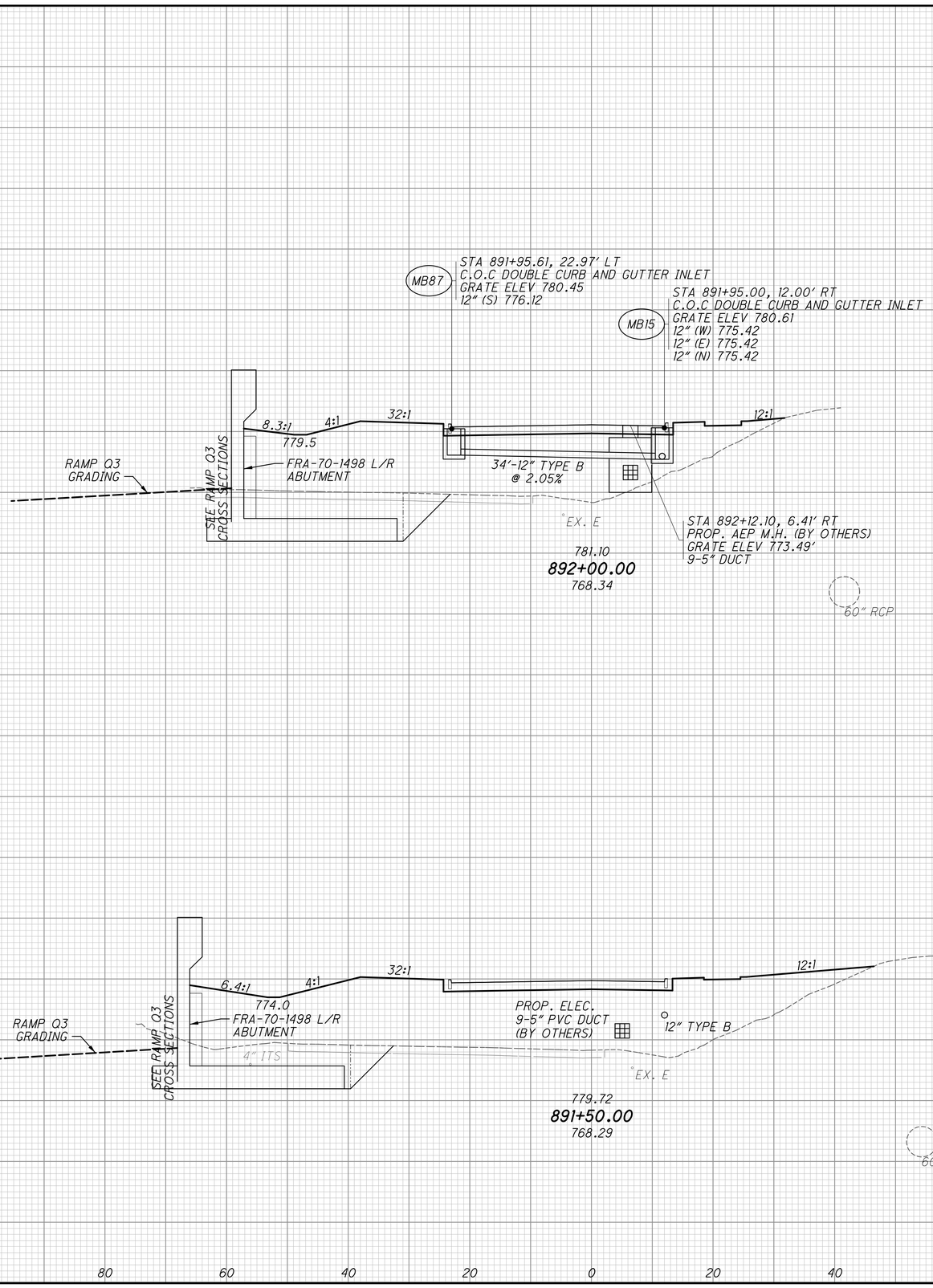

END AREA		VOLUME	
CUT	FILL	CUT	FILL
48	0		
		109	26
69	28		
		156	159
		265	185

CALCULATED MAH
CHECKED BSB

CROSS SECTIONS MOOBERRY ST.
STA. 891+50.00 TO STA. 892+00.00

FRA-70-14.54

971
2317

PLOT.CEL

ms consultants, inc.
msconsultants.com

www.msconsultants.com

Ohio DOT Workspace
70\71 East Interchange 2E

0 0.5" 1"

PDF: ohdot\V8i
PDF: 60-06634_2E_Columbus

Batchplot Spec: \\msconsultants.com\files\production\03\60\06634_2E\standards\oldr\batchplt.SPC
Pen Table: \\msconsultants.com\files\Standards\astm\ohdot\V8\ms\plotting\pen\V8i_ms_std.tbl
Plot Driver: \\msconsultants.com\files\Standards\astm\ohdot\v8i\ms\plotting\PDF.pltcfg

Model: Sheet
Printed: 2/20/2018 @ 4:31:59 PM
File: \\msconsultants.com\files\Production\03\60\06634_2E\roadway\sheets\105327XS1521.dgn

View: SHEET
By: dhall

34" x 22"

SEEDING	
END WIDTH	SQ. YDS.
30	155
	203
	358

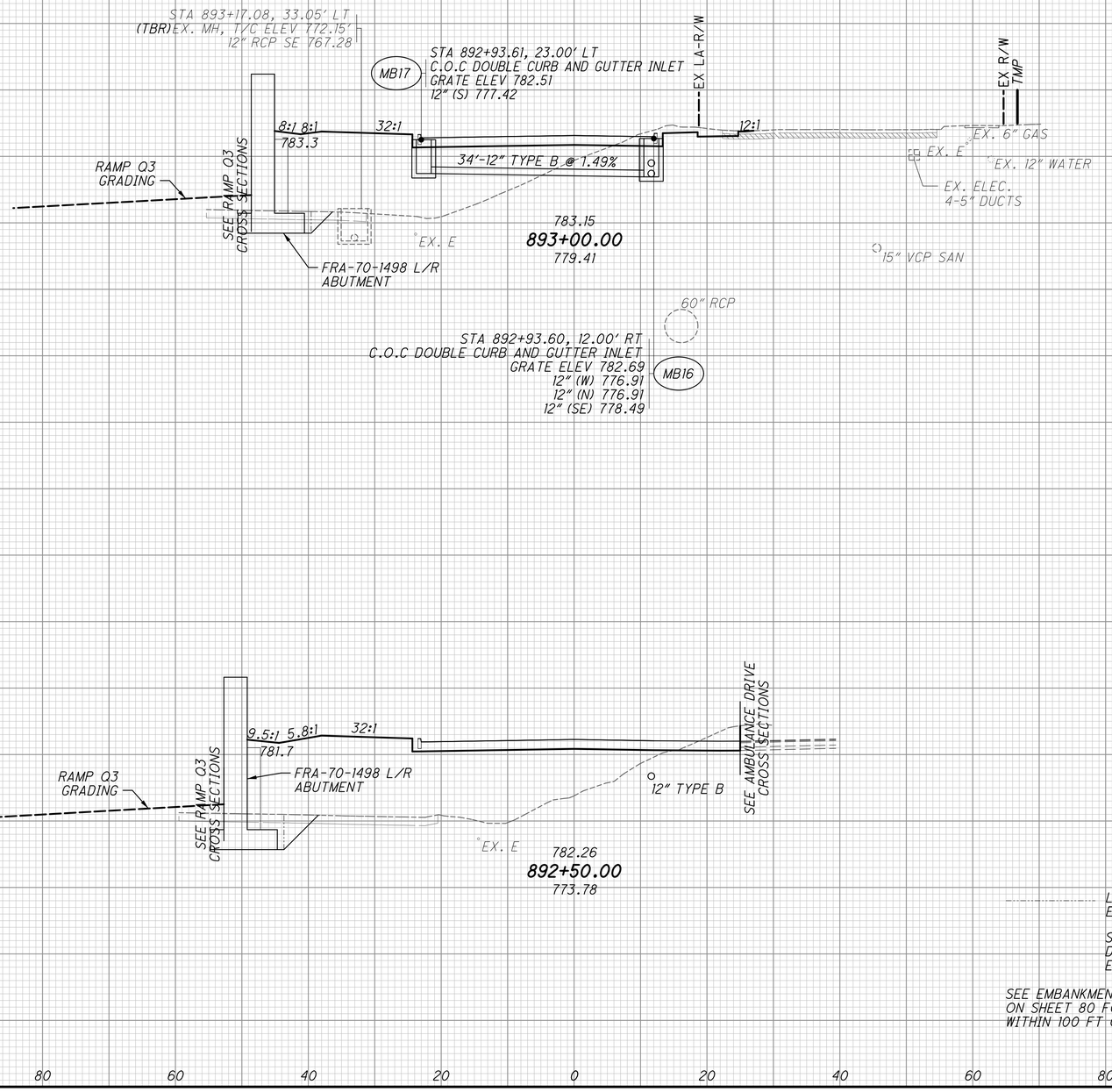

END AREA		VOLUME	
CUT	FILL	CUT	FILL
35	0		
56	0		
		85	0
		97	0
		182	0

LIMITS OF ITEM 203 AND 503 EARTHWORK

SEE CROSS SECTION CALCULATION DETAILS SHEET 751 FOR WALL & PIER EARTHWORK QUANTITIES

SEE EMBANKMENT CONSTRUCTION NOTE ON SHEET 80 FOR EARTHWORK WITHIN 100 FT OF BRIDGE ABUTMENT

CALCULATED MAH
CHECKED BSB

CROSS SECTIONS MOOBERRY ST.
STA. 892+50.00 TO STA. 893+00.00

FRA-70-14.54

ms consultants, inc.

PLOT.CEL

ms consultants, inc.
msconsultants.com

Ohio DOT Workspace
70\71 East Interchange 2E
www.msconsultants.com

0 0.5" 1"

Batchplot Spec: \\msconsultants.com\files\production\03\60\06634_2E\standards\oldot\batchplt.SPC
Pen Table: \\msconsultants.com\files\Standards\astm\ohdot\V8i\ms\plotting\pen\V8i_ms_std.TBL
Plot Driver: \\msconsultants.com\files\Standards\astm\ohdot\v8i\ms\plotting\PDF.pltcfg

Model: Sheet
Printed: 2/20/2018 @ 4:29:55 PM
File: \\msconsultants.com\files\Production\03\60\06634_2E\roadway\sheets\105327XS1522.dgn

View: SHEET
By: dhall

34" x 22"

SEEDING END WIDTH	SEEDING SQ. YDS.
28	114
32	230
	344

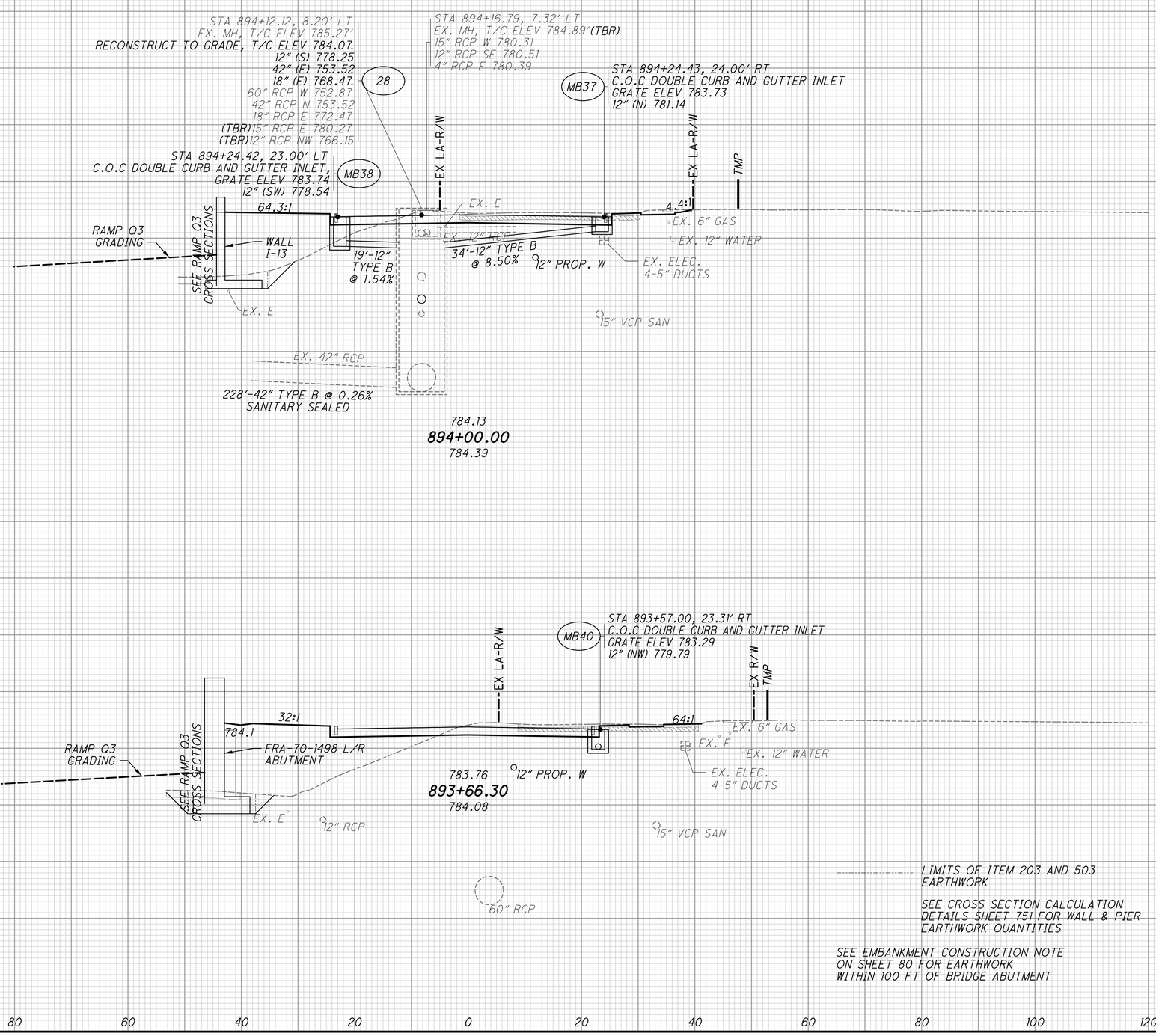

END AREA CUT	END AREA FILL	VOLUME CUT	VOLUME FILL	
67	175			
		78	294	
		58	296	AH
		58	0	BK
		114	0	
		192	294	

CALCULATED MAH
CHECKED BSB

CROSS SECTIONS MOOBERRY ST. STA. 893+66.30 TO STA. 894+00.00

FRA-70-14.54

973
2317

ms consultants, inc.

PLOT.CEL

ms consultants, inc.
msconsultants.com

www.msconsultants.com

Ohio DOT Workspace
70\71 East Interchange 2E

0 0.5" 1"

Batchplot Spec: \\msconsultants.com\files\production\Q3\60\06634_2E\standards\plotdrv\batchplt.spc
Pen Table: \\msconsultants.com\files\Standards\usth\ohdot\V8i\ms\plotting\pen\V8i_ms_std.tbl PCF: ohdot\V8i
Plot Driver: \\msconsultants.com\files\Standards\usth\ohdot\v8i\ms\plotting\PDF.pltcfg PCF: 60-06634_2E_Columbus

Model: Sheet View: FENCE_VIEW1
Printed: 6/19/2018 @ 8:58:20 AM By: jdouglas
File: N:\Q3\60\06634_2E\roadway\sheets\105222X1523.dgn

34" x 22"

SEEDING	
END WIDTH	SQ. YDS.
16	94
17	127
	221

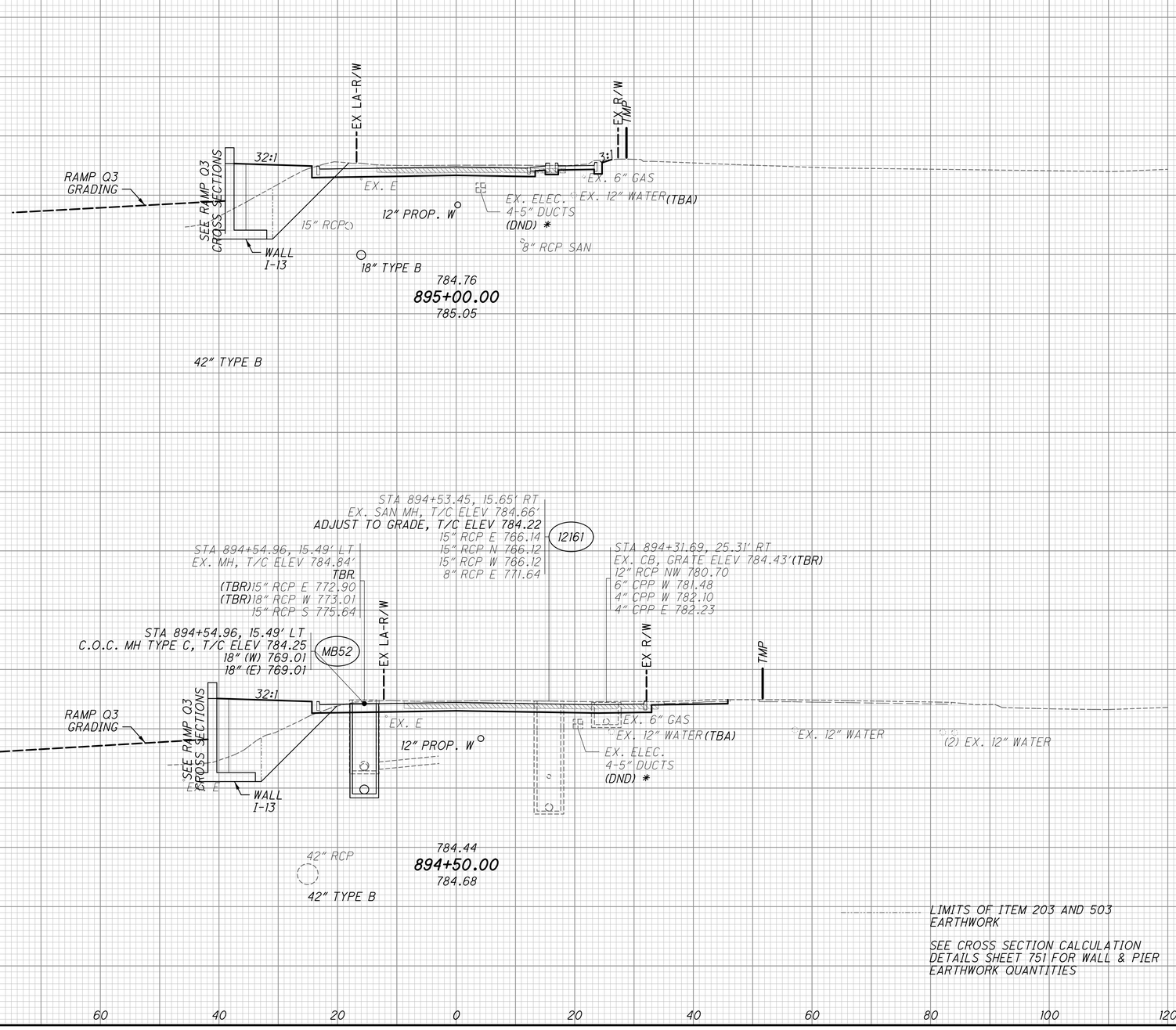

* = **CAUTION:** DO NOT DISTURB EX. ELECTRIC CONDUIT BANK

END AREA		VOLUME	
CUT	FILL	CUT	FILL
118	92		
118	131		
218	206		
171	283		
389	489		

CALCULATED MAH
CHECKED BSB

CROSS SECTIONS MOOBERRY ST.
STA. 894+50.00 TO STA. 895+00.00

FRA-70-14.54

974
2317

ms consultants, inc.

PLOT.CEL

ms consultants, inc.
msconsultants.com

Ohio DOT Workspace
70\71 East Interchange 2E

www.msconsultants.com

1" 0 0.5"

Batchplot Spec: \\msconsultants.com\files\production\03\60\06634_2E\standards\plotdrv\batchplt.SPC
Pen Table: \\msconsultants.com\files\Standards\usth\ohdot\V8i\ms\plotting\pen\V8i_ms_std.tbl
Plot Driver: PDF.pltcfg

34" x 22"

View: SHEET
By: dhall

Model: Sheet
Printed: 2/20/2018 @ 4:07:12 PM
File: \\msconsultants.com\files\Production\03\60\06634_2E\roadway\sheets\105327XS1524.dgn

SEEDING	
END WIDTH	SQ. YDS.
6	
13	
50	
81	
131	

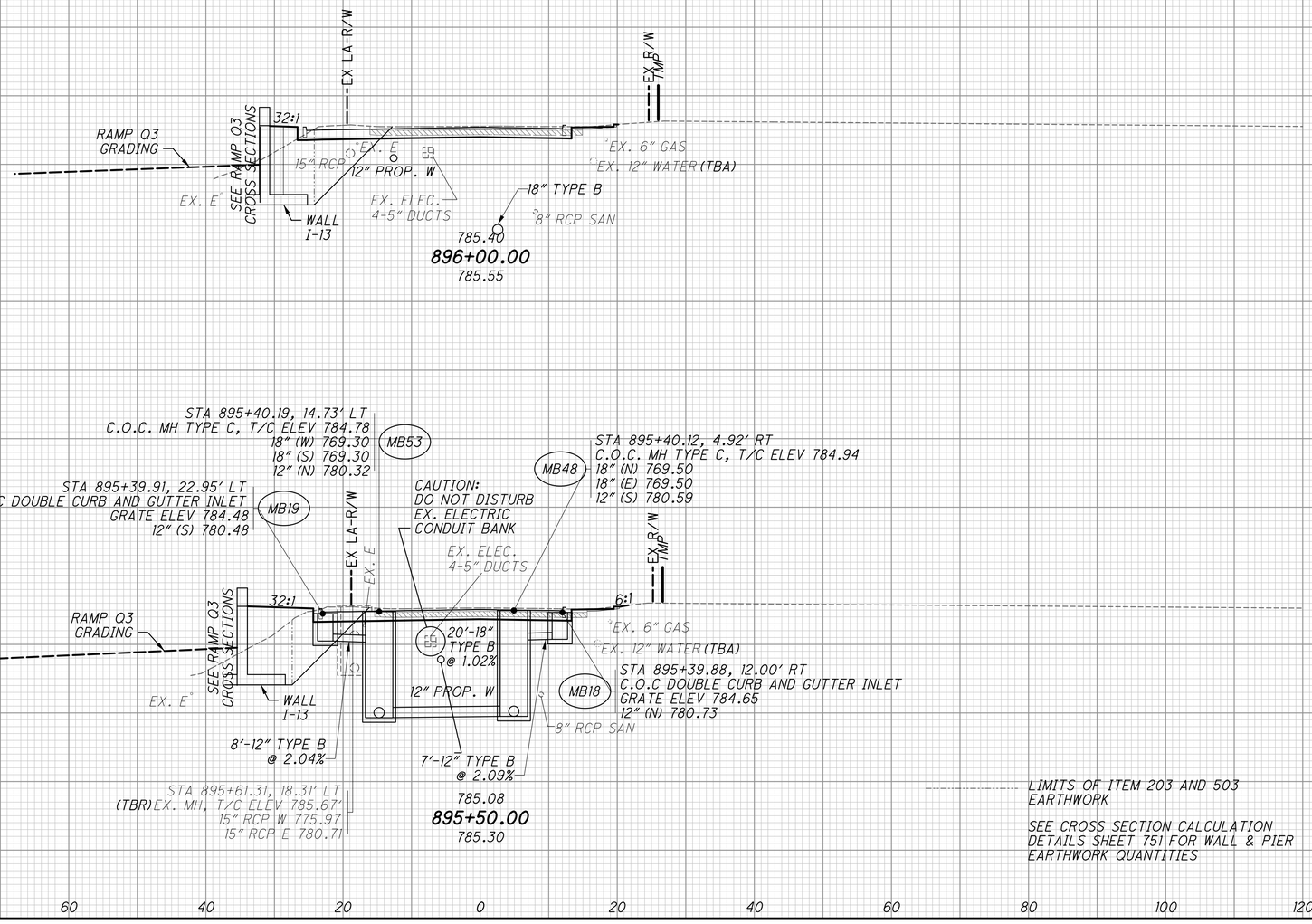

END AREA		VOLUME	
CUT	FILL	CUT	FILL
89	53		
92	68		
168	113		
195	148		
363	261		

CALCULATED MAH
CHECKED BSB

CROSS SECTIONS MOOBERRY ST.
STA. 895+50.00 TO STA. 896+00.00

FRA-70-14.54

975
2317

ms consultants, inc.

PLOT.CEL

ms consultants, inc.
msconsultants.com

Ohio DOT Workspace
70\71 East Interchange 2E
www.msconsultants.com

0 0.5" 1"

Batchplot Spec: \\msconsultants.com\files\production\03\60\06634.2E\standards\plotdr\batchplt.SBC
Pen Table: \\msconsultants.com\files\Standards\ustn\ohdot\V8\ms\plotting\pen\V8i_ms_std.tbl
Plot Driver-PDF.pltcfg

Model: Sheet View: SHEET
Printed: 2/20/2018 @ 3:00:25 PM By: dhall
File: \\msconsultants.com\files\Production\03\60\06634.2E\roadway\sheets\105222A51525.dgn

34" x 22"

SEEDING	
END WIDTH	SQ. YDS.
	2
	17
	4
	16
	2
	20
	53

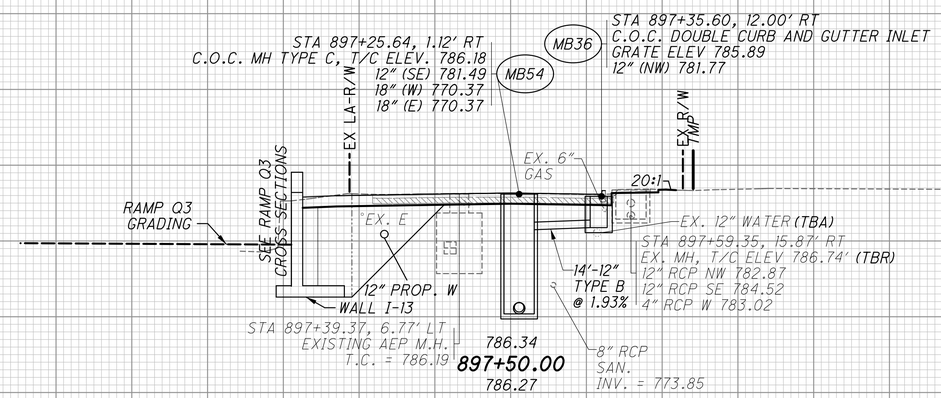

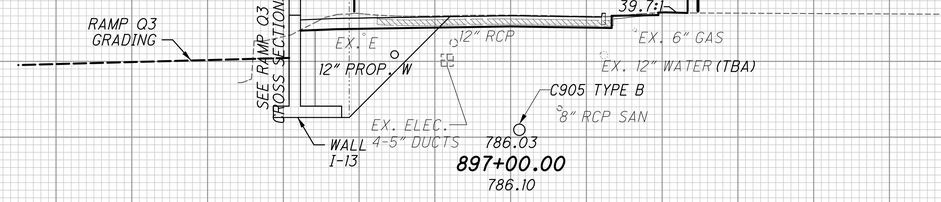

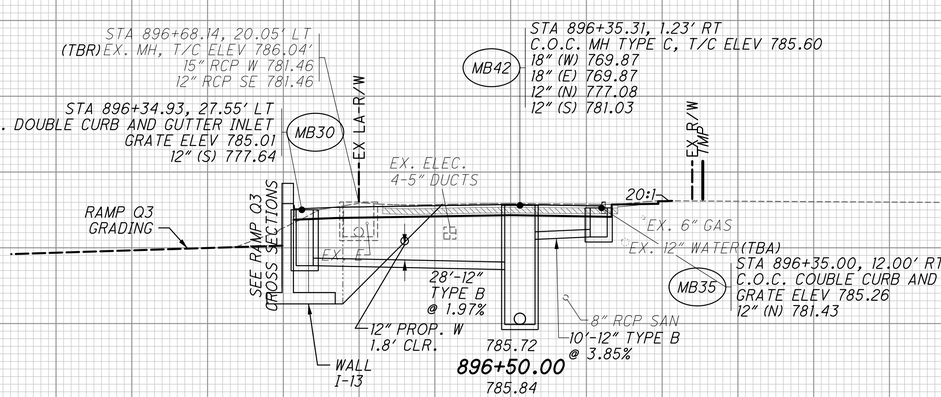

END AREA		VOLUME	
CUT	FILL	CUT	FILL
82	56		
84	54		
85	51		
		154	102
157	97		
161	97		
472	296		

CALCULATED MAH
CHECKED BSB

CROSS SECTIONS MOOBERRY ST.
STA. 896+50.00 TO STA. 897+50.00

FRA-70-14.54

976
2317

PLOT.CEL

ms consultants, inc.
msconsultants.com

Ohio DOT Workspace
70\71 East Interchange 2E

0 0.5" 1"

Batchplot Spec: \\msconsultants.com\files\production\03\60\06634.2E\standards\dot\r\batchplt.SPC
Pen Table: \\msconsultants.com\files\Standards\ustn\ohdot\V8i\ms\plotting\pen\V8i_ms_std.tbl
Plot Driver-PDF.pltcfg

Model: Sheet
Printed: 2/20/2018 @ 3:02:16 PM
File: \\msconsultants.com\files\Production\03\60\06634.2E\roadway\sheets\105222451526.dgn

View SHEET
By: dhall

34" x 22"

www.msconsultants.com

SEEDING	
END WIDTH	SQ. YDS.
3	
8	
0	
6	
14	

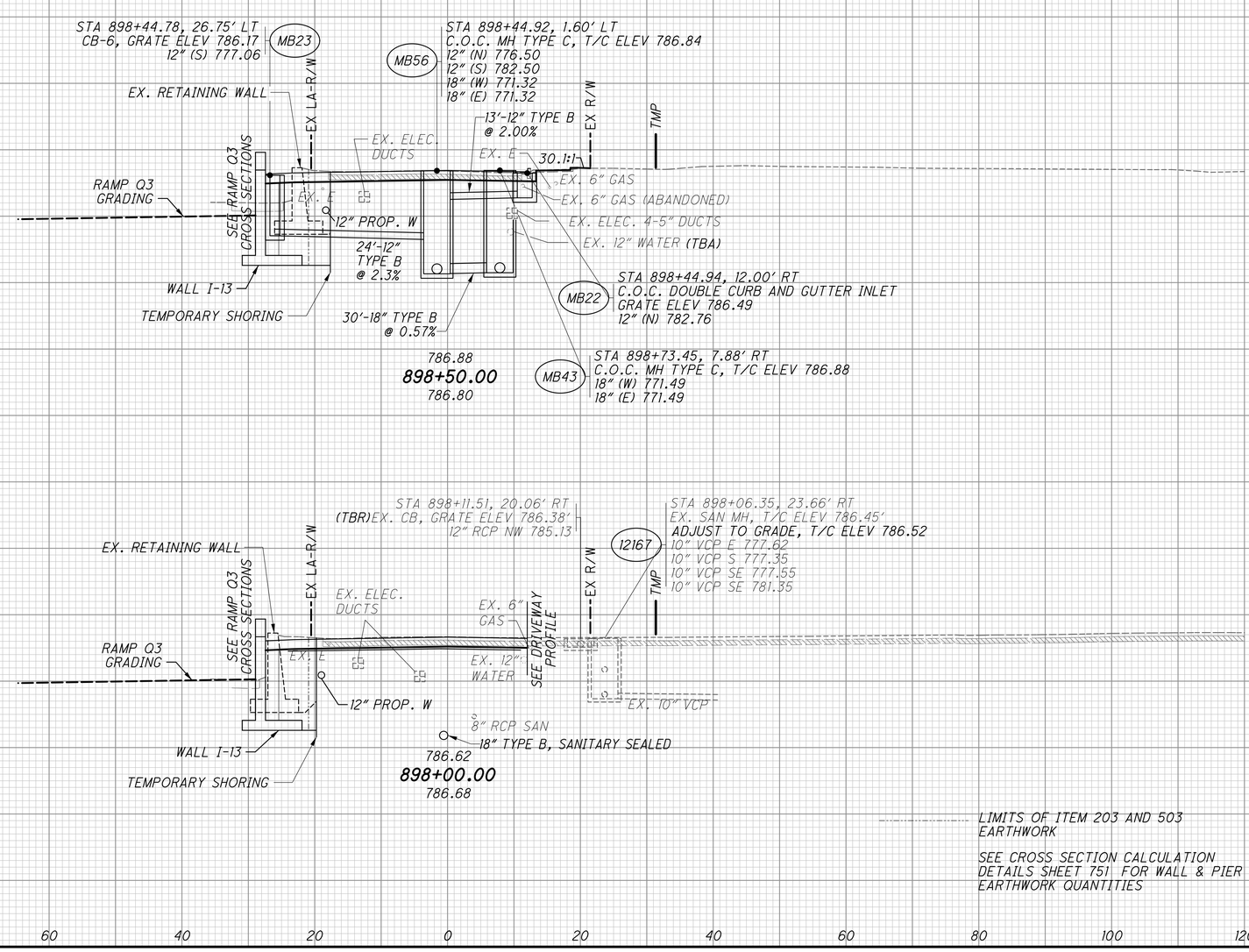

END AREA		VOLUME	
CUT	FILL	CUT	FILL
88	69		
161	119		
86	59		
156	107		
317	226		

CALCULATED MAH
CHECKED BSB

CROSS SECTIONS MOOBERRY ST.
STA. 898+00.00 TO STA. 898+50.00

FRA-70-14.54

977
2317

PLOT.CEL

ms consultants, inc.
msconsultants.com

Ohio DOT Workspace
70\71 East Interchange 2E

www.msconsultants.com

0 1" 0.5"

Batchplot Spec: \\msconsultants.com\files\production\03\60\06634_2E\standards\plotdrv\batchplt.SPC
Pen Table: \\msconsultants.com\files\Standards\usth\ohdot\V8i\ms\plotting\pen\V8i_ms_std.tbl
Plot Driver: PDF.pltcfg

PDF: ohdotV8i
DGN: 60-06634_2E_Columbus

34" x 22"

View: SHEET
By: dhall

Model: Sheet @ 3:03:18 PM
Printed: 2/20/2018
File: \\msconsultants.com\files\Production\03\60\06634_2E\roadway\sheets\105327XS1527.dgn

SEEDING	
END WIDTH	SQ. YDS.
1	
12	
3	
17	
29	

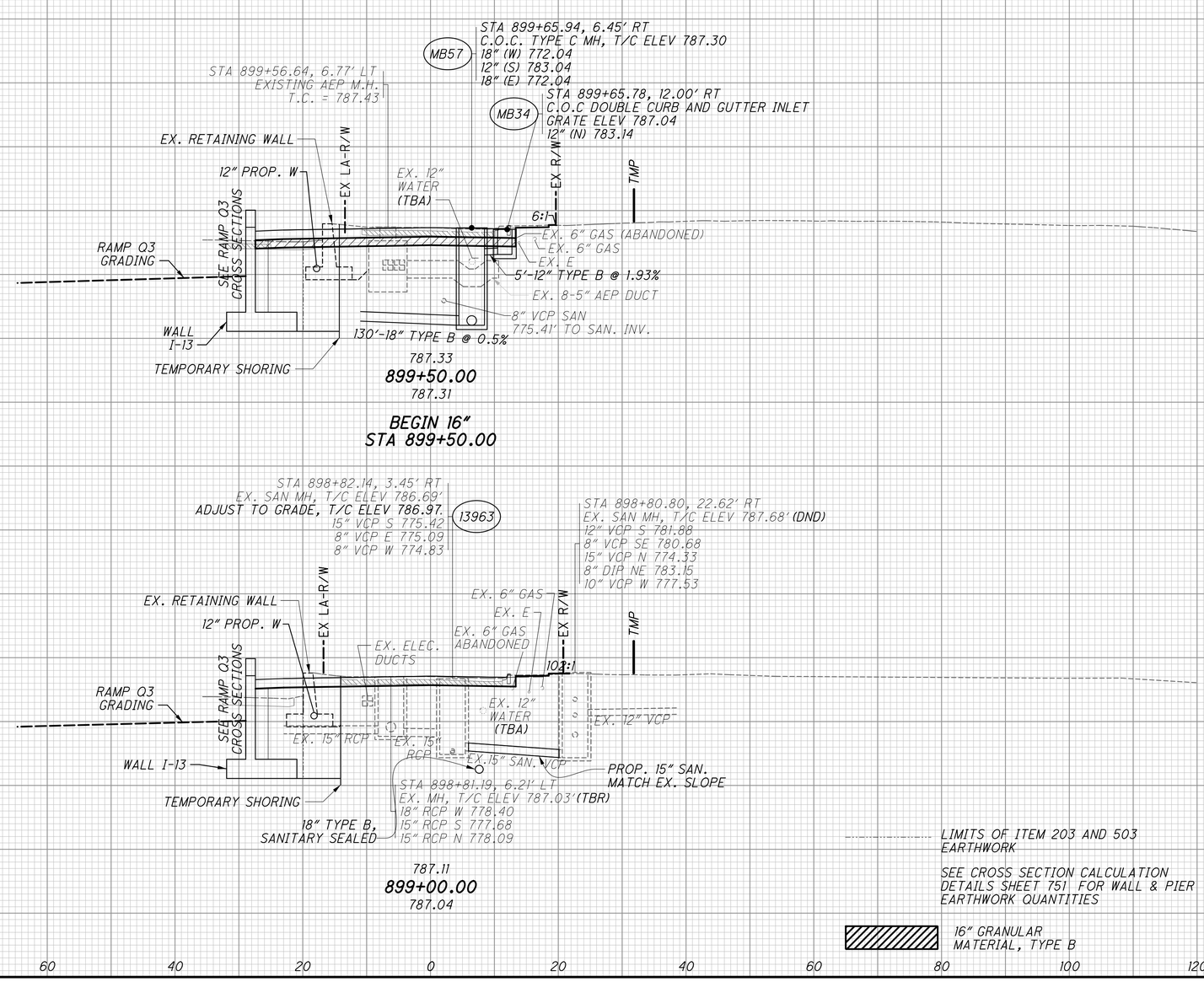

END AREA		VOLUME	
CUT	FILL	CUT	FILL
99	67		
		176	128
92	72		
		166	131
		342	259

CALCULATED MAH
CHECKED BSB

CROSS SECTIONS MOOBERRY ST. STA. 899+00.00 TO STA. 899+50.00

FRA-70-14.54

978
2317

ms consultants, inc.

PLOT.CEL

ms consultants, inc.
msconsultants.com

www.msconsultants.com

Ohio DOT Workspace
70\71 East Interchange 2E

0 1" 0.5"

Batchplot Spec: \\msconsultants.com\files\production\Q3\60\06634_2E\standards\plotdr\batchplt.spc
Pen Table: \\msconsultants.com\files\Standards\ustn\ohdot\V8i\ms\plotting\pen\V8i_ms_std.tbl
Plot Driver: \\msconsultants.com\files\Standards\ustn\ohdot\v8i\ms\plotting\PDF.pltcfg
PCF: ohdotV8i
PCF: 60-06634_2E_Columbus

34" x 22"

Model: Sheet
Printed: 6/19/2018 @ 8:58:27 AM
File: N:\Q3\60\06634_2E\roadway\sheets\105322X1528.dgn
View: FENCE_VIEW1
By: jdoughs

SEEDING	
END WIDTH	SQ. YDS.
0	
12	
4	
15	
27	

END 16" CEMENT STABILIZATION
STA 900+75.00

*** = CAUTION:**
DO NOT DISTURB
EX. ELECTRIC
CONDUIT BANK

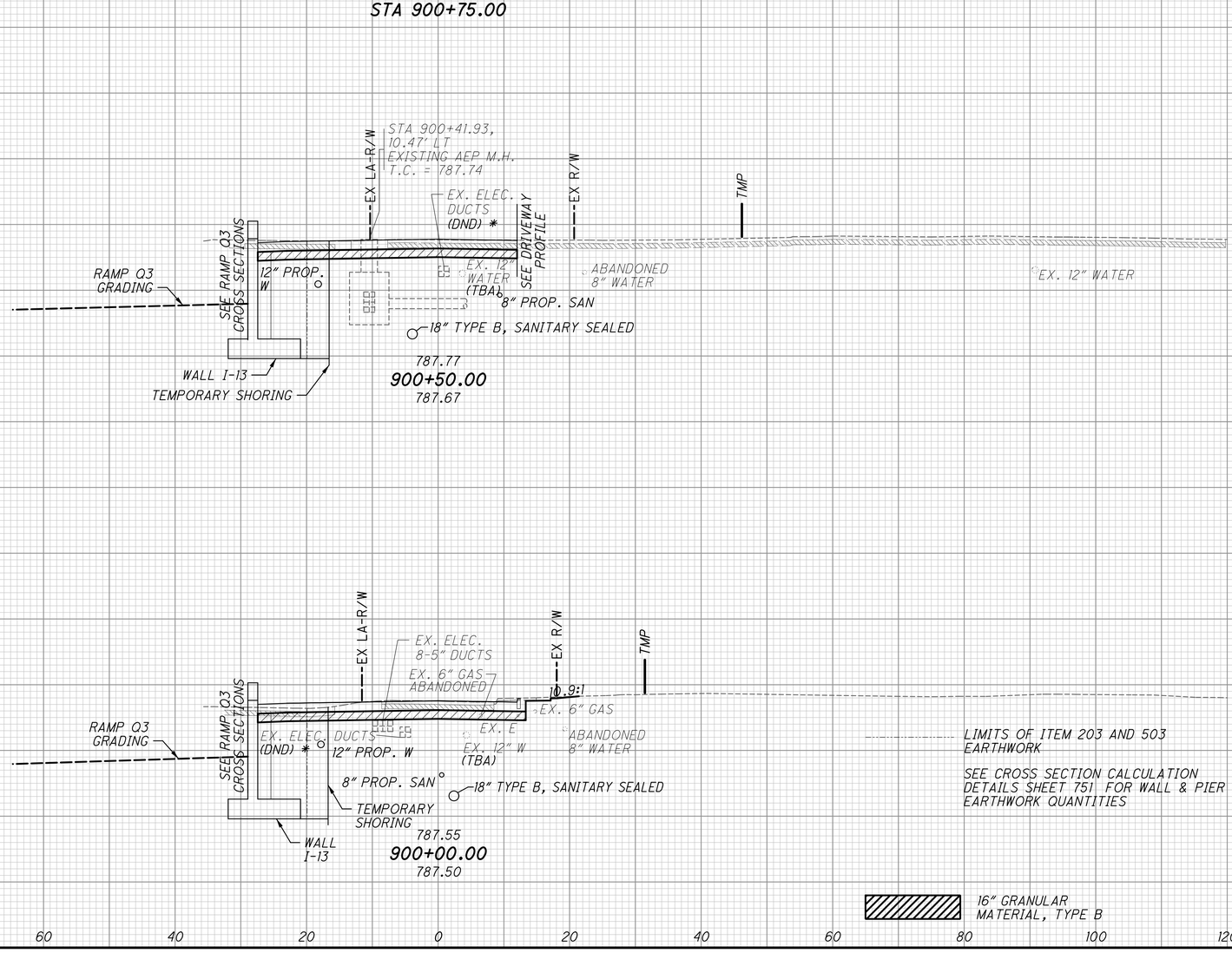

END AREA		VOLUME	
CUT	FILL	CUT	FILL
74	47		
		142	87
79	46		
		165	106
		307	193

CALCULATED MAH
CHECKED BSB

CROSS SECTIONS MOOBERRY ST.
STA. 900+00.00 TO STA. 900+50.00

FRA-70-14.54

979
2317

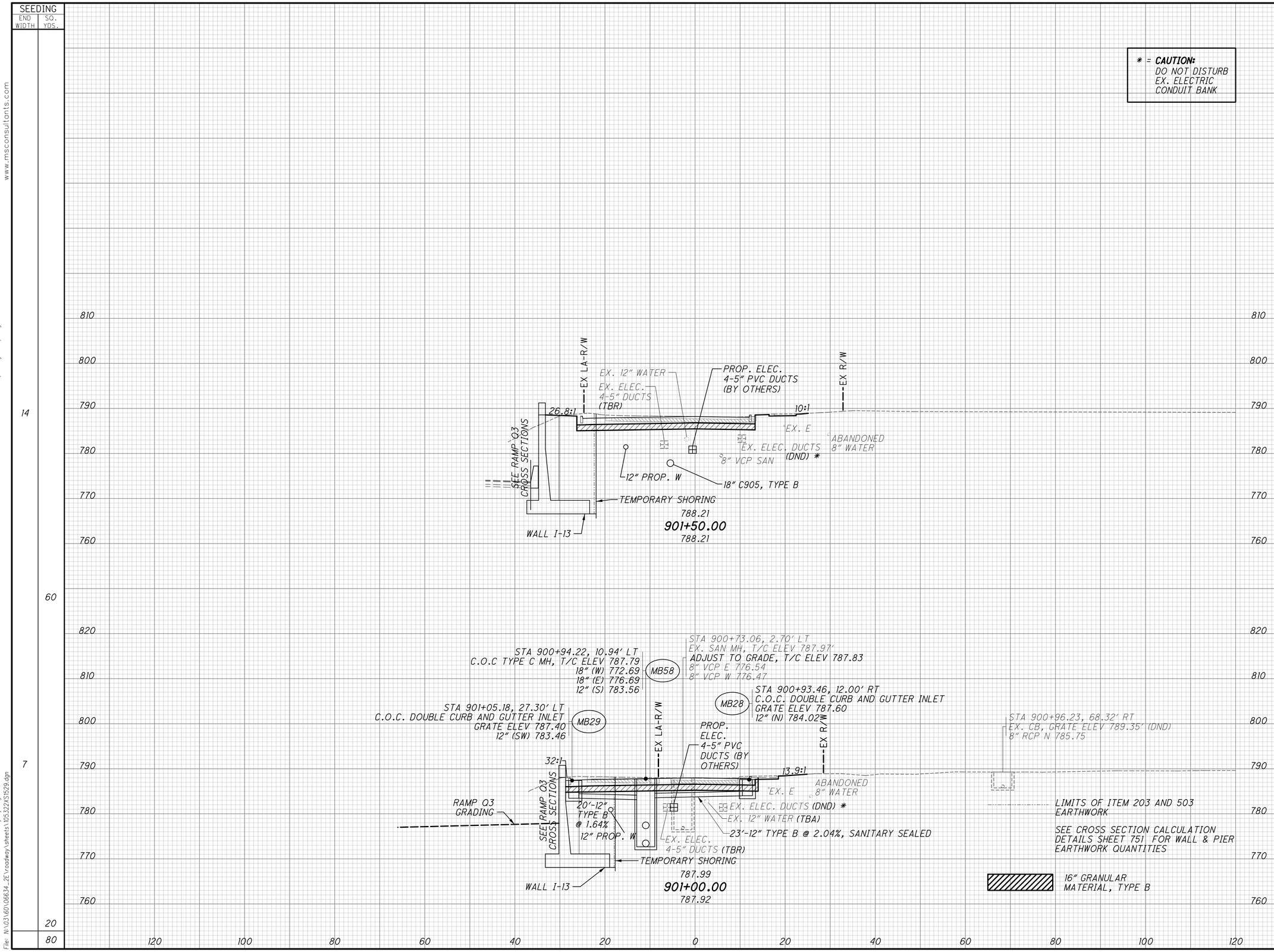

END AREA CUT	END AREA FILL	VOLUME CUT	VOLUME FILL
95	59		
		152	88
70	36		
		133	77
		285	165

CALCULATED MAH
CHECKED BSB

CROSS SECTIONS MOOBERRY ST.
STA. 901+00.00 TO STA. 901+50.00

FRA-70-14.54

980
2317

ms consultants, inc.

PLOT.CEL

ms consultants, inc.
msconsultants.com

Ohio DOT Workspace
70\71 East Interchange 2E
www.msconsultants.com

Batchplot Spec: \\msconsultants.com\files\production\03\60\06634_2E\standards\plotdrv\batchplt.spc
Pen Table: \\msconsultants.com\files\Standards\ustn\ohdot\V8i\ms\plotting\pen\V8i_ms_std.tbl
Plot Driver: \\msconsultants.com\files\Standards\ustn\ohdot\v8i\ms\plotting\PDF.pltcfg

34" x 22"

View: FENCE_VIEW1
By: jdouglas
Model: Sheet
Printed: 6/19/2018 @ 8:58:28 AM
File: N:\03\60\06634_2E\roadway\sheets\105322XS1529.dgn

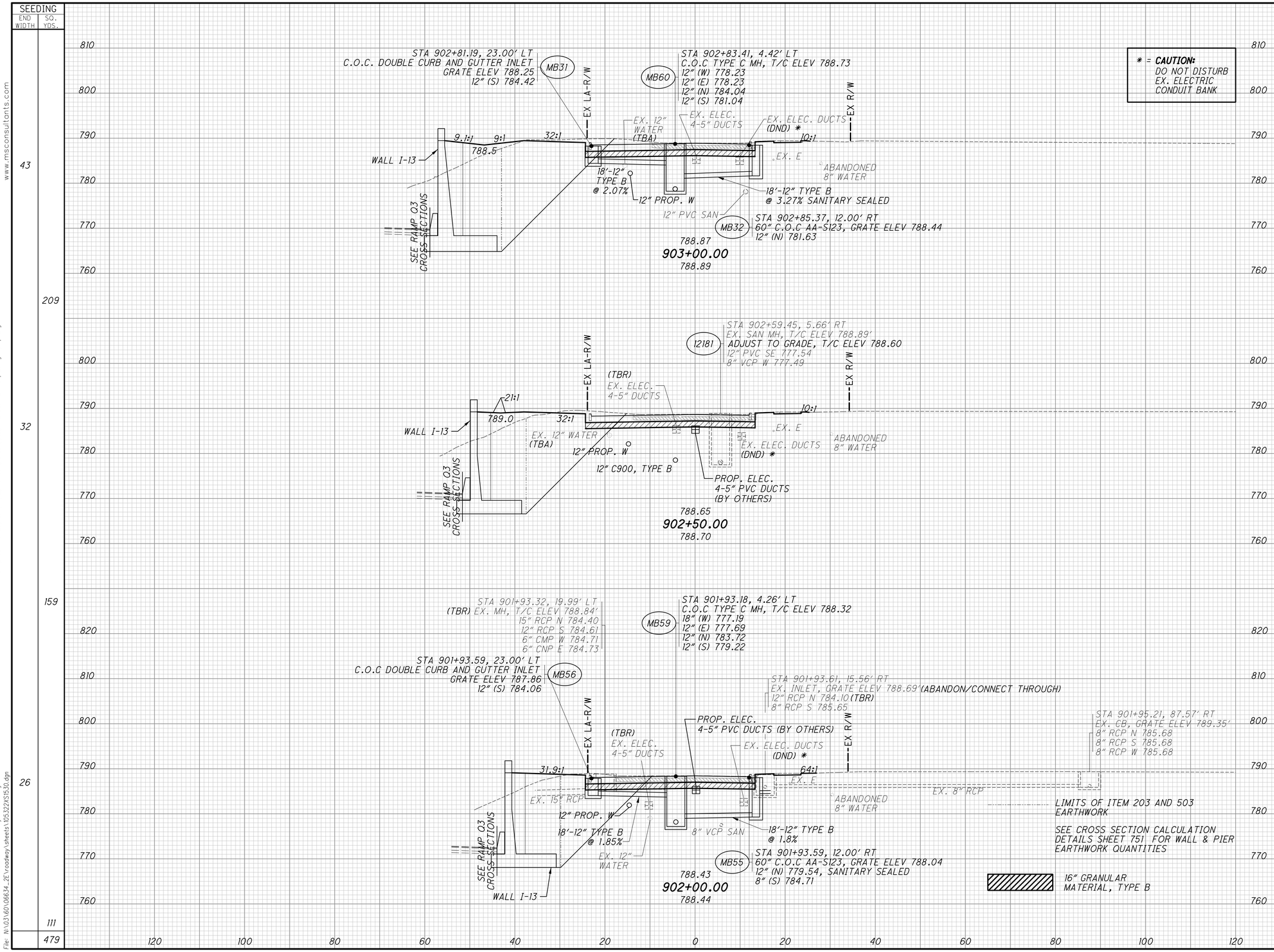

END AREA CUT	END AREA FILL	VOLUME CUT	VOLUME FILL
343	306		
		568	514
271	249		
		442	397
207	180		
		279	221
		1289	1132

CALCULATED MAH
CHECKED BSB

CROSS SECTIONS MOOBERRY ST.
STA. 902+00.00 TO STA. 903+00.00

FRA-70-14.54

981
2317

ms consultants, inc.

PLOT.CEL

ms consultants, inc.
msconsultants.com

Ohio DOT Workspace
70\71 East Interchange 2E
www.msconsultants.com

Batchplot Spec: \\msconsultants.com\files\production\03\60\06634_2E\standards\plotdrv\batchplt.spc
Pen Table: \\msconsultants.com\files\Standards\ustn\ohdot\V8i\ms\plotting\pen\V8i_ms_std.tbl
Plot Driver: \\msconsultants.com\files\Standards\ustn\ohdot\v8i\ms\plotting\PDF.pltcfg

34" x 22"

View: FENCE_VIEW1
By: hbrendlinger
Model: Sheet
Printed: 9/11/2018 @ 5:22:13 PM
File: N:\03\60\06634_2E\roadway\sheets\105322XS1530.dgn

PLOT.CEL

ms consultants, inc.
msconsultants.com

Ohio DOT Workspace
70\71 East Interchange 2E
www.msconsultants.com

0 0.5" 1"

Batchplot Spec: \\msconsultants.com\files\production\03\60\06634.2E\standards\oladr\batchplt.SPC
Pen Table: \\msconsultants.com\files\Standards\usth\ohdot\V8i\ms\plotting\pen\V8i_ms_std.tbl
Plot Driver- PDF: ohdot\V8i
DGN: 60-06634_2E_Columbus

Model: Sheet View SHEET
Printed: 2/20/2018 @ 1:48:17 PM By: dhall
File: \\msconsultants.com\files\Production\03\60\06634.2E\roadway\sheets\105222X1531.dgn

34" x 22"

SEEDING	
END WIDTH	SQ. YDS.
54	
	60
53	
	277
46	
	250
	587

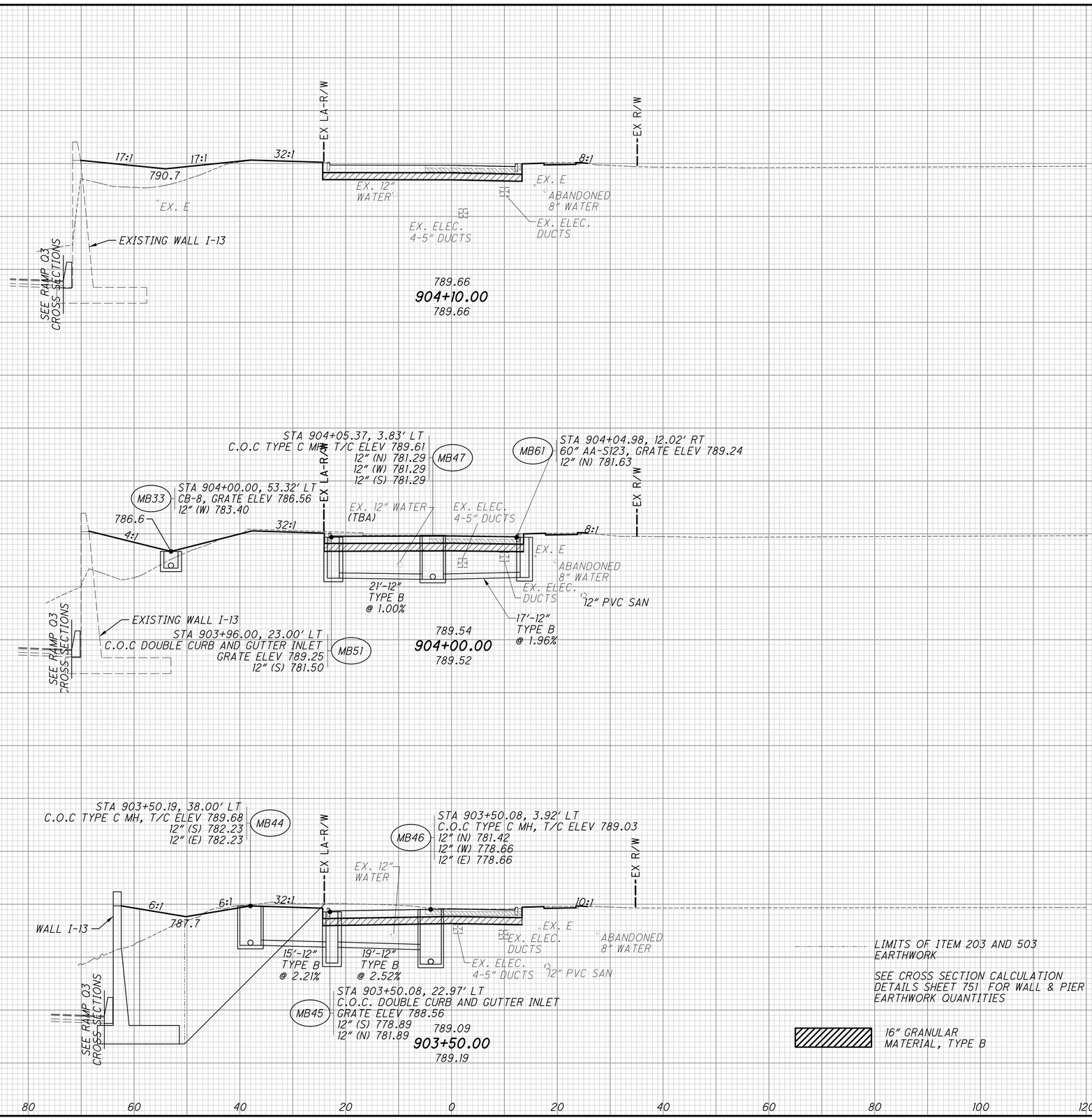

END AREA		VOLUME	
CUT	FILL	CUT	FILL
43	85		
		18	34
53	96		
		420	417
401	354		
		688	612
		1126	1063

CALCULATED MAH
CHECKED BSB

CROSS SECTIONS MOOBERRY ST.
STA. 903+50.00 TO STA. 904+10.00

FRA-70-14.54

982
2317

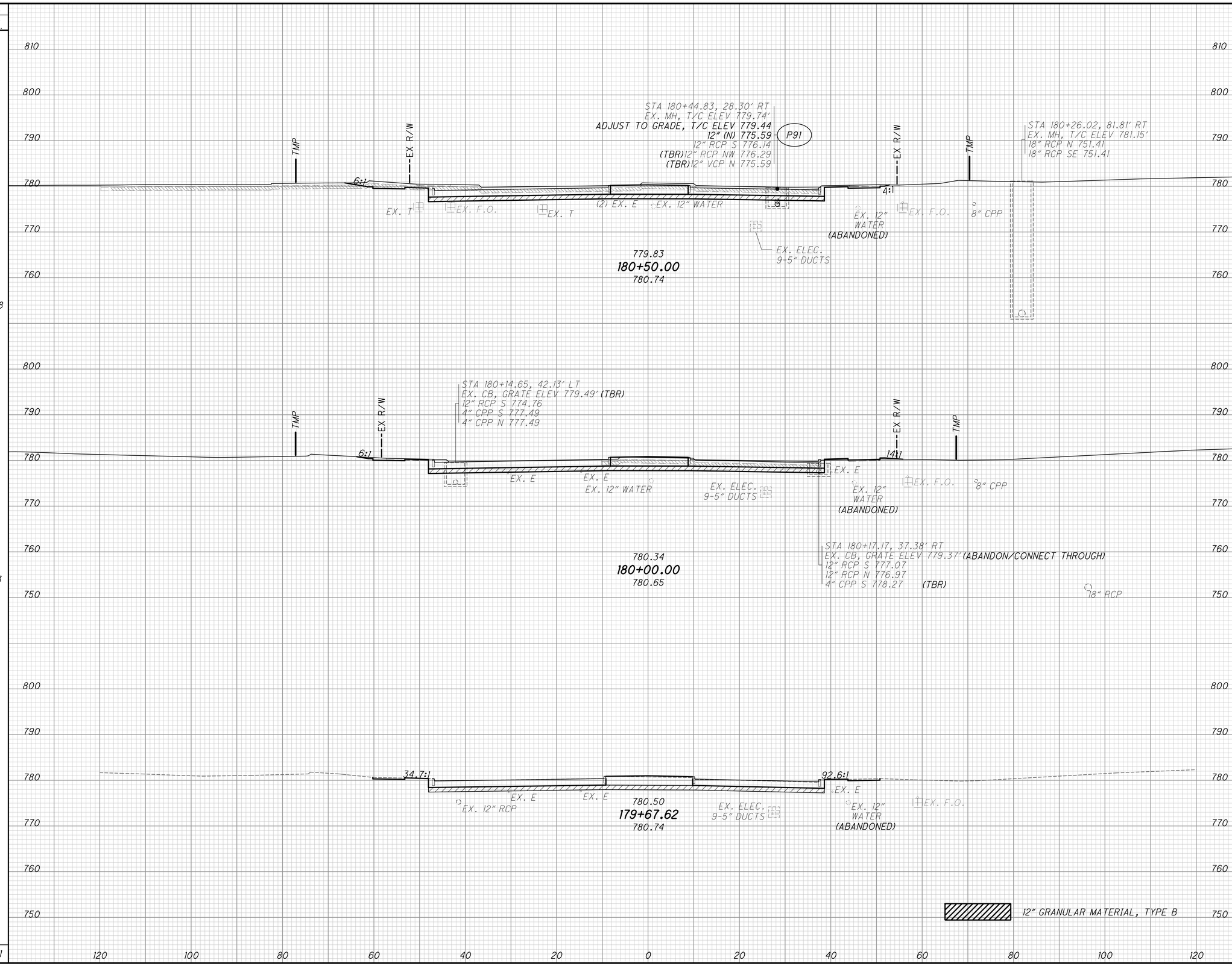

SEEDING END WIDTH	SEEDING SQ. YDS.	END AREA CUT	END AREA FILL	VOLUME CUT	VOLUME FILL
37		127	40		
	208			208	72
38		97	37		
	123			115	25
31	0	95	4	0	0
	331			323	97

CALCULATED MAH
CHECKED BSB

CROSS SECTIONS PARSONS AVE.
STA. 179+67.62 TO STA. 180+50.00

FRA-70-14.54

983
2317

ms consultants, inc.

PLOT.CEL

ms consultants, inc.
msconsultants.com

Ohio DOT Workspace
70\71 East Interchange 2E
www.msconsultants.com

Batchplot Spec: \\msconsultants.com\files\production\03\60\06634_2E\standards\plotdrv\batchplt.spc
Pen Table: \\msconsultants.com\files\Standards\ustn\ohdot\V8i\ms\plotting\pen\V8i_ms_std.tbl
Plot Driver: PDF.pltcfg

34" x 22"

View: SHEET
By: dhall

Model: Sheet
Printed: 2/20/2018 @ 1:34:14 PM
File: \\msconsultants.com\files\Production\03\60\06634_2E\roadway\sheets\105322XS1543.dgn

PLOT.CEL

ms consultants, inc.
msconsultants.com

Ohio DOT Workspace
70\71 East Interchange 2E
www.msconsultants.com

Batchplot Spec: \\msconsultants.com\files\production\03\60\06634_2E\standards\plotdrv\batchplt.spc
Pen Table: \\msconsultants.com\files\Standards\vastin\ohdot\V8i\ms\plotting\pen\V8i_ms_std.tbl PCF: ohdot\V8i
Plot Driver: \\msconsultants.com\files\Standards\vastin\ohdot\v8i\ms\plotting\PDF.pltcfg PCF: 60-06634_2E_Columbus

Model: Sheet View: FENCE_VIEW1
Printed: 6/19/2018 @ 8:58:35 AM By: jdouglas
File: N:\03\60\06634_2E\roadway\sheets\05322X5544.dgn

34" x 22"

SEEDING	
END WIDTH	SQ. YDS.
	68
	342
	55
	295
	51
	244
	881

12" GRANULAR MATERIAL, TYPE B

STA 181+93.04, 63.09' LT
EX. CB, GRATE ELEV 780.45' (TBR)
10" PVC S 778.49
4" PVC W 778.50
4" PVC N 779.08
4" PVC E 779.11

STA 181+88.27, 43.91' RT
COC MH TYPE C, T/C ELEV 777.28
12" (W) 768.56
18" (S) 768.06
18" (N) 768.06
P98

STA 181+97.55, 70.83' RT
EX. MH, T/C ELEV 781.20' (TBR)
18" RCP N 774.76
18" RCP SW 774.88
15" RCP SE 774.86
4" VCP S 779.06

STA 182+10.00, 33.50' RT
(ATG) EX. AEP M.H.
EX. GRATE ELEV 780.82'
9-5" DUCT

STA 181+95.65, 78.91' RT (TBR)
EX. INLET, GRATE ELEV 781.24'
15" RCP W 776.01
12" RCP SE 776.16

TMP
EX R/W
6:1
4:1
776.95
182+00.00
780.87
7'-12" TYPE C @ 2.00%
15" RCP
EX. 4-5" PVC DUCT
P97
STA 181+88.02, 37.29' RT
COC DOUBLE C&G INLET,
GRATE ELEV 776.43
12" (E) 768.70

STA 181+50.83, 28.81' RT
EX. MH, T/C ELEV 780.67' (TBR)
12" VCP S 775.17
12" VCP W 776.09
18" RCP NE 775.27
12" RCP E 775.52

STA 181+64.10, 109.07' RT
(TBR) EX. INLET, GRATE ELEV 781.07'
12" RCP NW 776.61

STA 181+68.17, 26.14' RT
(TBR) EX. AEP M.H.
EX. GRATE ELEV 780.78'
9-5" DUCT

STA 181+54.41, 54.59' RT
EX. CB, GRATE ELEV 780.00' (TBR)
12" RCP W 776.21
4" CPP SW 777.50

STA 181+54.89, 15.13' LT
EX. CB, GRATE ELEV 780.19' (TBR)
12" RCP E 776.36
4" CPP N 777.94
4" CPP S 777.99

6:1
10" PVC
EX. T
12" RCP
12" RCP
4:1
EX. E
EX. 12" WATER
777.95
181+50.00
780.58
EX. ELEC. 9-5" DUCT
EX. ELEC. 9-5" DUCT (ABANDONED)
18" TYPE C

STA 181+20.76, 57.50' LT
(TBR) EX. CB, GRATE ELEV 780.41'
10" PVC N 778.31
8" PVC SE 778.27

STA 181+20.70, 44.97' LT
COC STANDARD C&G INLET,
GRATE ELEV 777.65
12" (SW) 774.15
12" (E) 771.92
P83

STA 180+86.08, 22.94' LT
EX. CB, GRATE ELEV 780.08' (TBR)
12" RCP SE 777.53
4" CPP SW 777.78
4" CPP N 777.72
8" PVC NW 777.60

STA 181+20.25, 37.28' RT
COC DOUBLE C&G INLET,
GRATE ELEV 777.78
12" (W) 769.60
12" (S) 773.33
15" (E) 769.35
P84

STA 181+20.39, 43.91' RT
COC MH TYPE C, T/C ELEV 778.64
15" (W) 769.25
18" (N) 769.00
P85

STA 180+99.37, 70.89' RT
EX. CB, GRATE ELEV 783.09' (DND)
8" CPP S 776.39

STA 180+82.94, 69.05' LT
COC MH TYPE C, T/C ELEV 780.66
12" (NE) 777.61
8" (W) 777.73±
P88

STA 180+78.24, 14.82' LT
EX. MH, T/C ELEV 780.17' (TBR)
12" RCP NW 777.17
8" PVC W 777.37 (REMOVE PORTION)
12" RCP SE 776.87

STA 181+23.05, 103.17' RT
(DND) EX. CB, GRATE
ELEV 782.63'
18" RCP N 750.94
18" RCP S 750.94

8" PVC
RECONNECT W/ MASONRY COLLAR PER DM-1.1
45'-12" TYPE B @ 7.69%
82'-12" TYPE B @ 2.85%
EX. T
EX. F.O.
EX. 12" WATER
12" VCP
EX. F.O.
778.95
181+00.00
780.46
EX. ELEC. 9-5" DUCT
EX. ELEC. 9-5" DUCT (ABANDONED)
7'-15" TYPE C @ 1.43%

END AREA	
CUT	FILL
573	34
404	34
667	63
317	34
411	68
1982	194

VOLUME	
CUT	FILL
904	63

CALCULATED MAH
CHECKED BSB

CROSS SECTIONS PARSONS AVE. STA. 181+00.00 TO STA. 182+00.00

FRA-70-14.54

984
2317

ms consultants, inc.

PLOT.CEL

ms consultants, inc.
msconsultants.com

www.msconsultants.com

Ohio DOT Workspace
70\71 East Interchange 2E

0 1" 0.5"

PDF: ohdot\V8i
PCF: 60-06634_2E_Columbus

Batchplot Spec: \\msconsultants.com\Files\Production\03\60\06634_2E\standards\plotdir\batchplt.spc
Pen Table: \\msconsultants.com\Files\Standards\usth\ohdot\V8i\ms\plotting\pen\V8i_ms_std.tbl
Plot Driver: \\msconsultants.com\Files\Standards\usth\ohdot\v8i\ms\plotting\PDF.pltcfg

Model: Sheet
Printed: 6/19/2018 @ 8:58:37 AM
File: N:\03\60\06634_2E\roadway\sheets\105322X31545.dgn

34" x 22"

View: FENCE_VIEW1
By: jdoughas

SEEDING	
END WIDTH	SQ. YDS.
0	
76	398
76	608

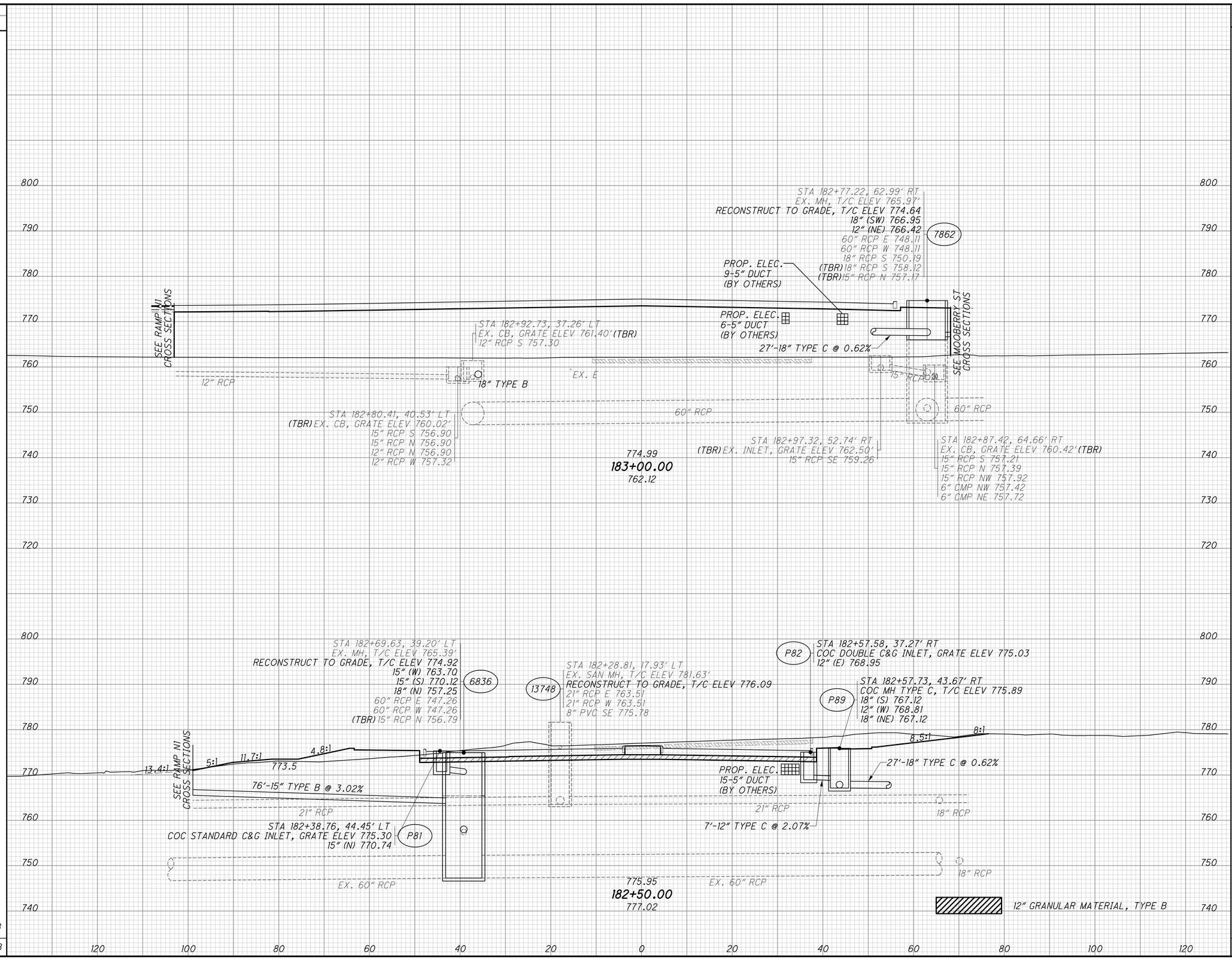

END AREA		VOLUME	
CUT	FILL	CUT	FILL
24	1895		
272	1817		
269	67		
780	93		
1052	1910		

CALCULATED MAH
CHECKED BSB

CROSS SECTIONS PARSONS AVE. STA. 182+50.00 TO STA. 183+00.00

FRA-70-14.54

985
2317

ms consultants, inc.

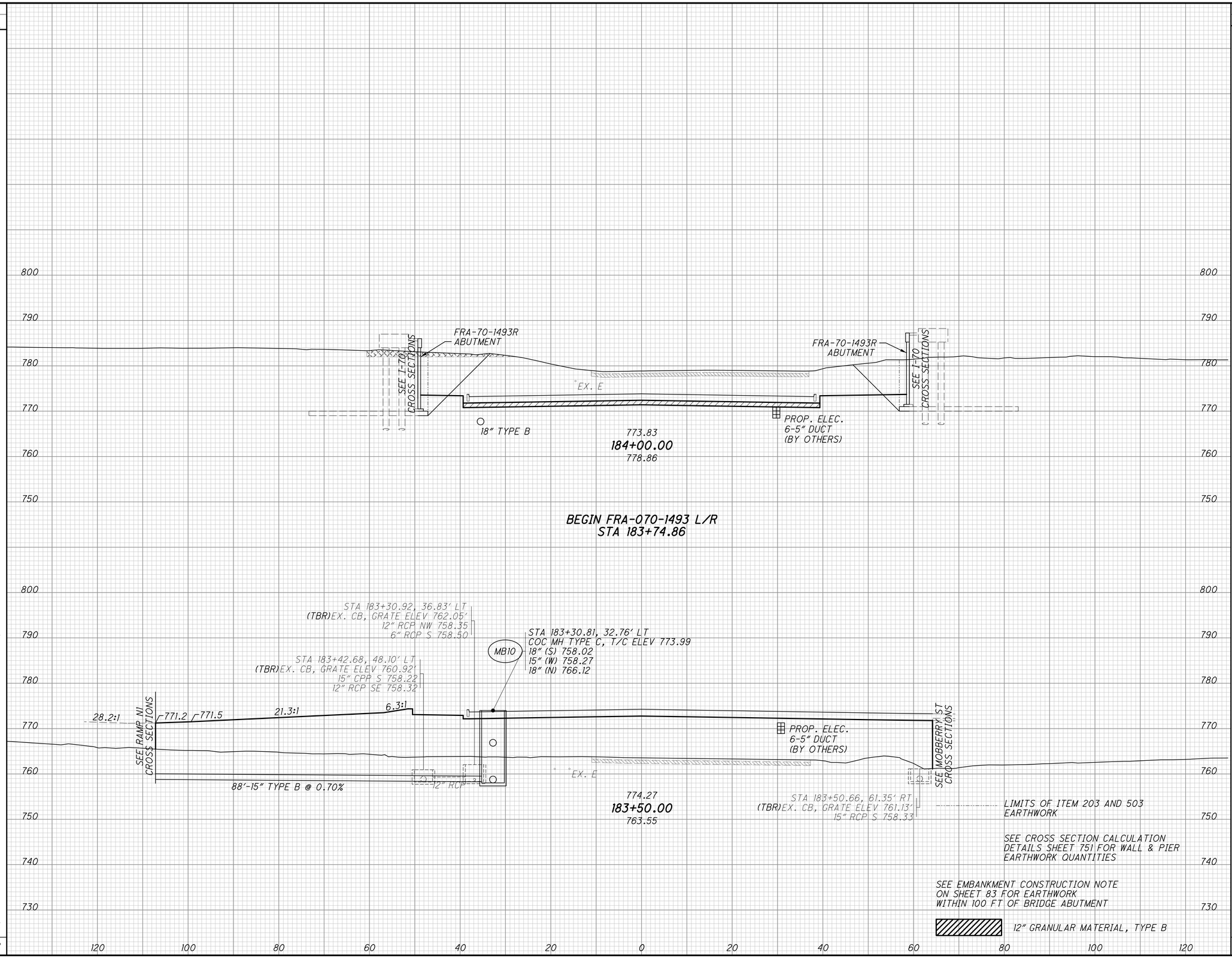

END AREA CUT	END AREA FILL	VOLUME CUT	VOLUME FILL
764	0		
		711	0
764	0	AH	
24	1536	BK	
		22	1415
24	1536		
		45	3177
		778	4592

CALCULATED MAH
CHECKED BSB

CROSS SECTIONS PARSONS AVE.
STA. 183+50.00 TO STA. 184+00.00

FRA-70-14.54

986
2317

ms consultants, inc.

PLOT.CEL

ms consultants, inc.
msconsultants.com

Ohio DOT Workspace
70\71 East Interchange 2E
www.msconsultants.com

Batchplot Spec: \\msconsultants.com\files\production\03\60\06634_2E\standards\plotdrv\batchplt.spc
Pen Table: \\msconsultants.com\files\Standards\ustn\ohdot\V8i\ms\plotting\pen\V8i_ms_std.tbl
Plot Driver: \\msconsultants.com\files\Standards\ustn\ohdot\v8i\ms\plotting\PDF.pltcfg

34" x 22"

View: FENCE_VIEW1
By: jdouglas
Model: Sheet
Printed: 6/19/2018 @ 8:58:38 AM
File: N:\03\60\06634_2E\roadway\sheets\105322XS1546.dgn

PLOT.CEL

ms consultants, inc.
msconsultants.com

www.msconsultants.com

Ohio DOT Workspace
70\71 East Interchange 2E

0 0.5" 1"

34" x 22"

Batchplot Spec: \\msconsultants.com\files\production\03\60\06634_2E\standards\plotdrv\batchplt.spc
Pen Table: \\msconsultants.com\files\Standards\usth\ohdot\V8i\ms\plotting\pen\V8i_ms_std.tbl PCF: ohdotV8i
Plot Driver: \\msconsultants.com\files\Standards\usth\ohdot\v8i\ms\plotting\PDF.pltcfg PCF: 60-06634_2E_Columbus

Model: Sheet View: FENCE_VIEW1
Printed: 6/19/2018 @ 8:58:39 AM By: jdaugtus
File: N:\03\60\06634_2E\roadway\sheets\105222X5154-7.dgn

SEEDING	
END WIDTH	SQ. YDS.
0	
0	

END PERMANENT PARSONS AVE.
BEGIN TRANSITIONAL PARSON AVE.
STA 185+00.07

FRA-70-1493R ABUTMENT

STA 184+53.74, 38.00' LT
COC DOUBLE C&G INLET, GRATE ELEV 772.89
P11
18" (S) 767.64
12" (E) 768.14
15" (N) 767.90

SEE I-70 CROSS SECTIONS

EX. E

75'-12" TYPE B @ 1.00%

EX. ELEC. 6-5" DUCT

773.67
184+50.00
777.51

P12
STA 184+53.74, 38.00' RT
COC DOUBLE C&G INLET, GRATE ELEV 772.89
12" (W) 768.89
12" (N) 768.89

SEE I-70 CROSS SECTIONS

LIMITS OF ITEM 203 AND 503 EARTHWORK

SEE CROSS SECTION CALCULATION DETAILS SHEET 751 FOR WALL & PIER EARTHWORK QUANTITIES

FRA-70-1493R ABUTMENT

SEE EMBANKMENT CONSTRUCTION NOTE ON SHEET 83 FOR EARTHWORK WITHIN 100 FT OF BRIDGE ABUTMENT

12" GRANULAR MATERIAL, TYPE B

END AREA		VOLUME	
CUT	FILL	CUT	FILL
646	0		
		1199	0
		1305	0
		2504	0

CALCULATED MAH
CHECKED BSB

CROSS SECTIONS PARSONS AVE.
STA. 184+50.00 TO STA. 185+00.00

FRA-70-14.54

987
2317

ms consultants, inc.

PLOT.CEL

ms consultants, inc.
msconsultants.com

www.msconsultants.com

Ohio DOT Workspace
70\71 East Interchange 2E

Batchplot Spec: \\msconsultants.com\files\production\03\60\06634_2E\standards\plotdrv\batchplt.spc
Pen Table: \\msconsultants.com\files\Standards\ustn\ohdot\V8i\ms\plotting\pen\V8i_ms_std.tbl
Plot Driver: \\msconsultants.com\files\Standards\ustn\ohdot\v8i\ms\plotting\PDF.pltcfg

Model: XS_SHEET_85+00.00_TO_86+00.00
Printed: 6/19/2018 @ 8:58:41 AM
File: N:\03\60\06634_2E\roadway\sheets\105221XS08.dgn

View: FENCE_VIEW1
By: jdouglas

34" x 22"

SEEDING END WIDTH	SEEDING SQ. YDS.
109	
	675
134	
	371
0	0
	1046

- APPROXIMATE LOCATION OF CONSTRUCTION DEBRIS TO BE REMOVED, SEE GENERAL NOTES SHEET 83 FOR DETAILS

SEE RAMP I-70 CROSS SECTIONS

43.9:1 | 12.8:1 | 32:1 | 9.5:1 | 34.3:1 | 4.8:1

STA 85+99.46, 18.55' LT
EX. INLET, GRATE ELEV 773.62' (TBR)
12" RCP N 769.51

EX. ELEC

773.32
86+00.00
773.38

1.8:1 | 42.4:1 | 30:1 | 24.7:1 | 25:1 | 23.4:1

STA 85+29.23, 34.87' RT
EX. AEP M.H.
EX. GRATE ELEV 773.51'
6-5" PVC DUCT (S)
4-5" PVC DUCT (W)

EX. ELEC
4-5" PVC DUCT

773.72
85+50.00
774.43

P13 STA 185+01.42, 38.00' LT
COC DOUBLE C&G INLET, GRATE ELEV 773.01
15" (S) 768.63

STA 185+06.89, 36.86' RT
COC STANDARD C&G INLET, GRATE ELEV 773.06 P14
12" (S) 769.37

EX. ELEC

773.61
85+00.00
776.00

EX. ELEC.
6-5" DUCT

790 / 780 / 770 / 760

120 100 80 60 40 20 0 20 40 60 80 100 120

END AREA CUT	END AREA FILL	VOLUME CUT	VOLUME FILL
627	17		
		1467	16
958	1		
		1328	1
477	0	0	0
		2795	17

CALCULATED

CHECKED

CROSS SECTIONS TRANS PARSONS AVE STA. 85+00.00 TO STA. 86+00.00

FRA-70-14.54

988
2317

ms consultants, inc.

PLOT.CEL

ms consultants, inc.
msconsultants.com

www.msconsultants.com

Ohio DOT Workspace
70\71 East Interchange 2E

0 1" 0.5"

Batchplot Spec: \\msconsultants.com\files\production\03\60\06634_2E\standards\odot\batchplt.spc
Pen Table: \\msconsultants.com\files\Standards\usth\ohdot\V8i\ms\plotting\pen\V8i_ms_std.tbl PDF: ohdot.V8i
Plot Driver: \\msconsultants.com\files\Standards\usth\ohdot\V8i\ms\plotting\PDF.pltcfg PDF: 60-06634_2E_Columbus

34" x 22"

Model: XS_SHEET_86+50.00_TO_86+90.27New FENCE_VIEW1
Printed: 6/19/2018 @ 8:58:42 AM By: jdouglas
File: N:\03\60\06634_2E\roadway\sheets\105321XS018.dgn

SEEDING	
END WIDTH	SQ. YDS.
0	
	150
67	
	491
	641

- APPROXIMATE LOCATION OF CONSTRUCTION DEBRIS TO BE REMOVED, SEE GENERAL NOTES SHEET 83 FOR DETAILS

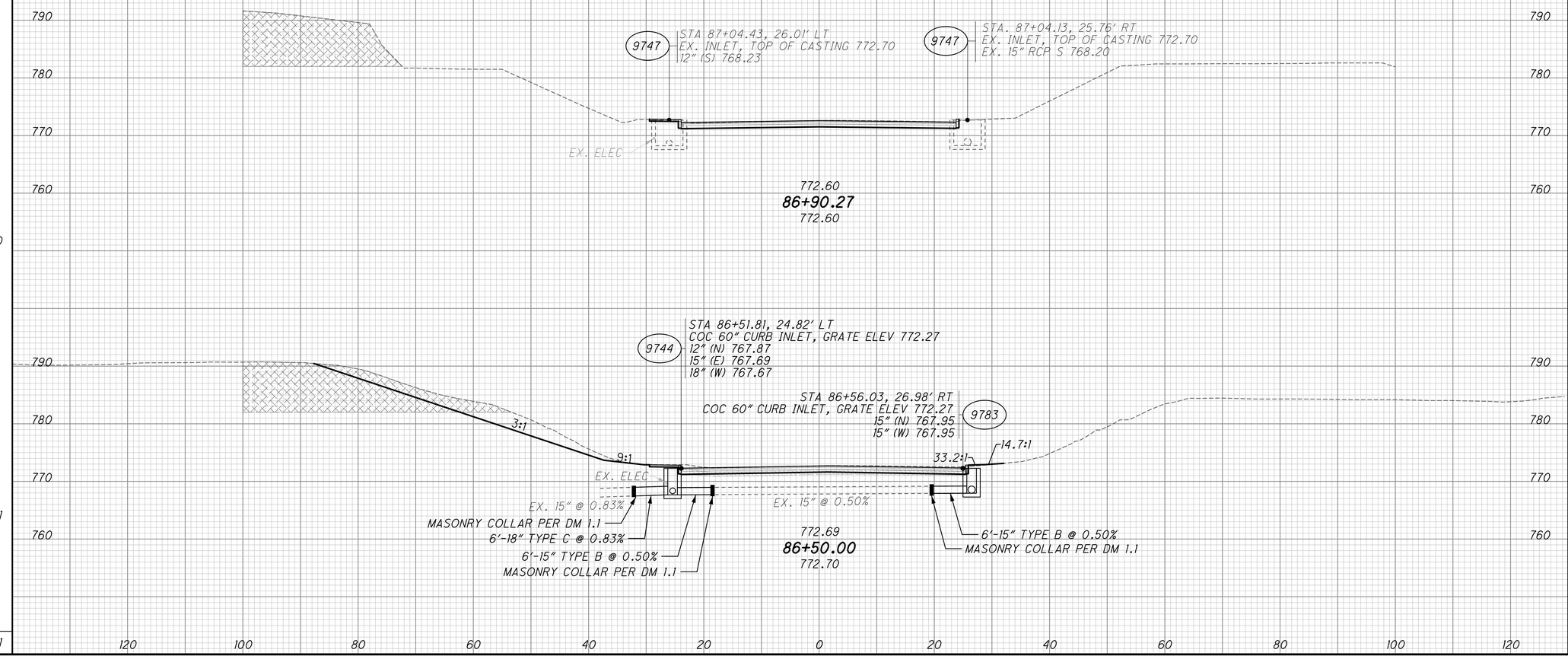

END AREA		VOLUME	
CUT	FILL	CUT	FILL
53	0		
		106	13
88	18		
		662	32
		768	45

CALCULATED

CHECKED

CROSS SECTIONS TRANS PARSONS AVE STA. 86+50.00 TO STA. 86+90.27

FRA-70-14.54

989
2317

ms consultants, inc.

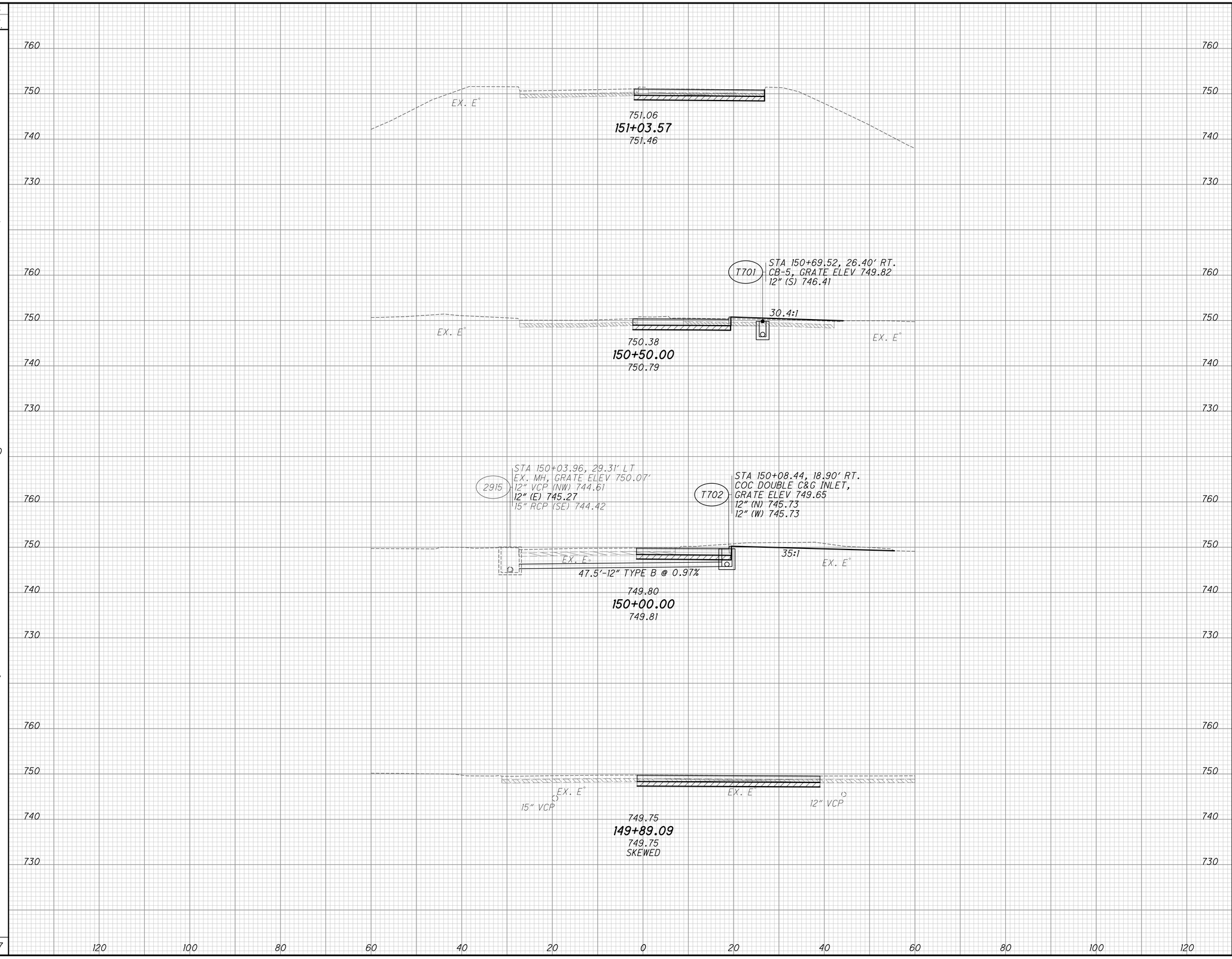

END AREA CUT	END AREA FILL	VOLUME CUT	VOLUME FILL
71	0		
		136	41
66	41		
		145	38
91	0		
		38	0
98	0		
		319	79

CALCULATED DWH
CHECKED HRB

CROSS SECTIONS THIRD ST.
STA. 149+89.09 TO STA. 151+03.57

FRA-70-14.54

989A
2317

ms consultants, inc.

PLOT.CEL

ms consultants, inc.
msconsultants.com

Ohio DOT Workspace
70\71 East Interchange 2E
www.msconsultants.com

Batchplot Spec: \\msconsultants.com\files\production\03\60\06634_2E\standards\plotdrv\batchplt.spc
Pen Table: S:\std\plotting\ustn\V8i\pen\V8i_ms_std.tbl
Plot Driver: \\msconsultants.com\files\Standards\ustn\ohdot\v8i\ms\plotting\PDF.pltcfg

34" x 22"

View: FENCE_VIEW1
By: jdouglas
Model: Sheet
Printed: 6/19/2018 @ 8:58:48 AM
File: \\msconsultants.com\files\Production\03\60\06634_2E\roadway\sheets\105322XS0503.dgn

PLOT.CEL

ms consultants, inc.
msconsultants.com

www.msconsultants.com

Ohio DOT Workspace
70\71 East Interchange 2E

1" 0.5" 0

Batchplot Spec: \\vnsconsultants.com\files\production\03\60\06634_2E\standards\plotdrv\batchplt.spc
Pen Table: \\vnsconsultants.com\files\Standards\usth\ohdot\V8i\ms\plotting\pen\V8i_ms_std.tbl PDF: ohdot\V8i
Plot Driver: \\vnsconsultants.com\files\Standards\usth\ohdot\v8i\ms\plotting\PDF.pltcfg PCF: 60-06634_2E_Columbus

Model: XS_SHEET_691+05.00_TO_692+00.00 User: FENCE_VIEW1
Printed: 6/19/2018 @ 8:58:55 AM By: jdouglas
File: N:\03\60\06634_2E\roadway\sheets\05322XS069.dgn

34" x 22"

SEEDING	
END WIDTH	SQ. YDS.

END AREA		VOLUME	
CUT	FILL	CUT	FILL

CALCULATED

CHECKED

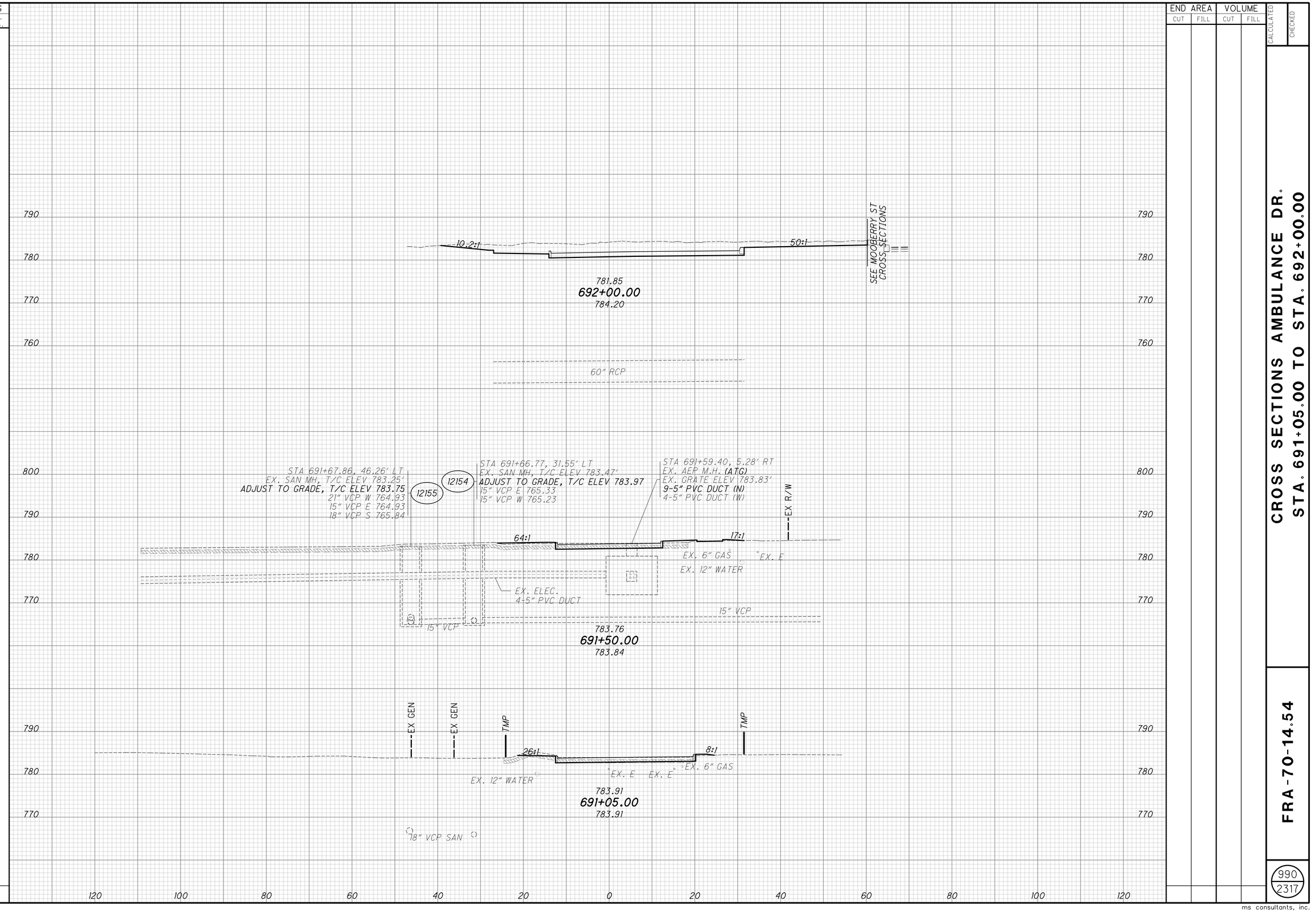

CROSS SECTIONS AMBULANCE DR.
STA. 691+05.00 TO STA. 692+00.00

FRA-70-14.54

990
2317

ms consultants, inc.

PLOT.CEL

ms consultants, inc.
msconsultants.com

www.msconsultants.com

Ohio DOT Workspace
70\71 East Interchange 2E

Batchplot Spec: \\msconsultants.com\files\production\03\60\06634.2E\standards\plotdrv\batchplt.spc
Pen Table: \\msconsultants.com\files\Standards\ustn\ohdot\V8i\ms\plotting\pen\V8i_ms_std.tbl
Plot Driver: \\msconsultants.com\files\Standards\ustn\ohdot\v8i\ms\plotting\PDF.pltcfg

PCF: ohdotV8i
PCF: 60-06634_2E_Columbus

Model: Sheet
Printed: 6/19/2018 @ 8:58:56 AM
File: N:\03\60\06634.2E\roadway\sheets\105322X1570.dgn

View: FENCE_VIEW1
By: jdoughas

34" x 22"

SEEDING	
END WIDTH	SQ. YDS.
34	130
13	67
11	0
	197

STA 591+20.97, 82.45' LT
EX. SAN MH, T/C ELEV 782.45' (DND)
21" RCP E 764.40
21" RCP W 764.30
15" RCP S 773.00

STA 591+19.02, 55.22' RT
(TBR) EX. MH, T/C ELEV 782.50'
15" RCP NW 777.73
12" CPP SE 777.95

STA 590+92.70, 78.56' RT
EX. CB, GRATE ELEV 782.44' (TBR)
12" CPP NW 778.79
4" CPP W 780.36
4" CPP E 780.39

6:1
6:1
EX. ELEC.
4-5" PVC DUCT
EX. ELEC.
4-5" PVC DUCT
12" CPP
EX. 21" RCP
EX. 21" RCP
778.98
591+00.00
781.86
SEE AMBULANCE DR. CROSS SECTIONS

STA 590+28.49, 3.33' LT
EX. CB, GRATE ELEV 781.67' (TBR)
12" CPP W 776.47
12" CPP S 776.47
4" CPP S 778.77
4" CPP N 778.77

EX R/W
TMP
STA 590+63.41, 48.14' RT
EX. CB, GRATE ELEV 781.84' (TBR)
12" CPP SW 776.89
6:1
6:1
EX. T
(2) EX. E
(3) EX. 12" WATER
EX. 12" CPP
EX. ELEC.
9-5" DUCT
(ABANDONED)
780.69
590+50.00
782.64

STA 590+16.82, 21.76' LT
EX. CB, GRATE ELEV 781.68' (TBR)
12" CPP E 776.63
4" CPP N 778.68
4" CPP S 778.73

EX R/W
TMP
TMP
TMP
64:1
64:1
EX. T
EX. E
EX. 12" WATER
EX. 12" CPP
781.87
590+00.00
782.40

END AREA	
CUT	FILL
150	9
87	18
13	0

VOLUME	
CUT	FILL
219	25
92	16
0	0
311	41

CALCULATED MAH
CHECKED BSB

CROSS SECTIONS CHILDRENS DR. STA. 590+00.00 TO STA. 591+00.00

FRA-70-14.54

991
2317

PLOT.CEL

ms consultants, inc.
msconsultants.com

Ohio DOT Workspace
70\71 East Interchange 2E

www.msconsultants.com

0 0.5" 1"

34" x 22"

Batchplot Spec: \\msconsultants.com\files\production\03\60\06634_2E\standards\plotdrv\batchplt.spc
Pen Table: \\msconsultants.com\files\Standards\ustn\ohdot\V8i\ms\plotting\pen\V8i_ms_std.tbl PCF: ohdotV8i
Plot Driver: \\msconsultants.com\files\Standards\ustn\ohdot\v8i\ms\plotting\PDF.pltcfg PCF: 60-06634_2E_Columbus

Model: Sheet View: FENCE_VIEW1
Printed: 6/19/2018 @ 8:58:57 AM By: jdoughas
File: N:\03\60\06634_2E\roadway\sheets\1053229571.dgn

SEEDING	
END WIDTH	SQ. YDS.
56	248
	248

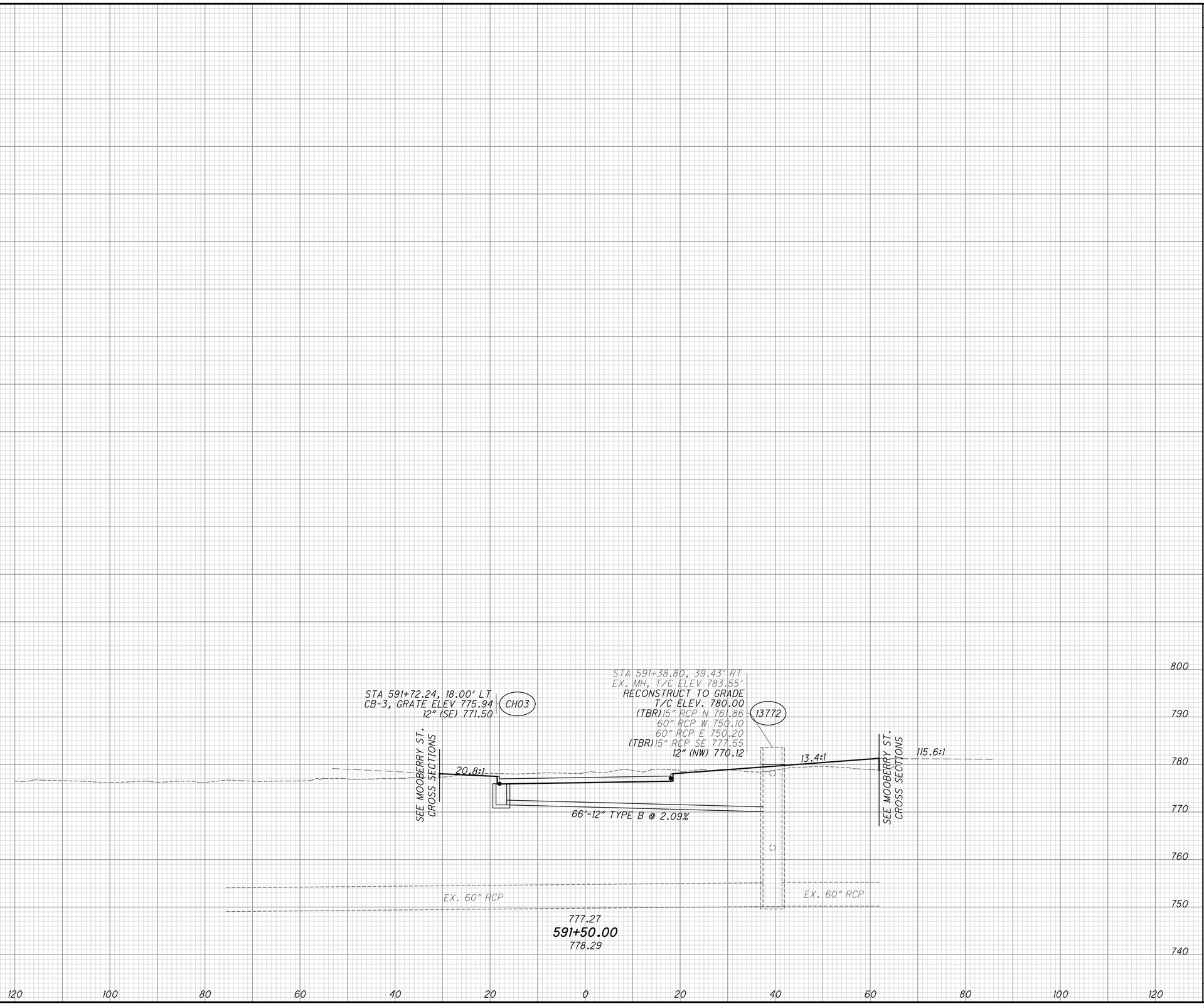

END AREA		VOLUME	
CUT	FILL	CUT	FILL
88	35		
		220	41
		220	41

CALCULATED MAH
CHECKED BSB

CROSS SECTIONS CHILDRENS DR.
STA. 591+50.00

FRA-70-14.54

992
2317

PLOT.CEL
ms consultants, inc.
msconsultants.com
www.msconsultants.com
Ohio DOT Workspace
70\71 East Interchange 2E
1"
0.5"
0
PCF: ohdot\V8i
PCF: 60-06634_2E_Columbus
Batchplot Spec: \\msconsultants.com\files\production\03\60\06634_2E\standards\plotdir\batchplt.spc
Pen Table: \\msconsultants.com\files\Standards\ustn\ohdot\V8i\ms\plotting\pen\V8i_ms_std.tbl
Plot Driver: \\msconsultants.com\files\Standards\ustn\ohdot\v8i\ms\plotting\PDF.pltcfg
Model: Sheet
Printed: 6/19/2018 @ 8:58:59 AM
File: N:\03\60\06634_2E\roadway\sheets\105226E003.DGN
View: FENCE_VIEW1
By: jdouglas
34" x 22"

FOR SUPERELEVATION BREAKPOINT ROUNDING SEE THE SUPERELEVATION DIAGRAM FOLLOWING THE TRANS I-70 EB (WEST SIDE) SUPERELEVATION TABLES

SUPERELEVATION TABLE

P.I. STA. 857+48.14 | Dc = 1°00'00"

INSIDE EDGE (PROFILE GRADE)		RIGHT SIDE, 12'				RIGHT SIDE, 24'				RIGHT SIDE, 36'				RIGHT SIDE, TAPER					REMARKS
STATION	ELEVATION	CROSS SLOPE	ELEVATION CORRECTON	TRANSITION RATE	EDGE ELEVATION	CROSS SLOPE	ELEVATION CORRECTON	TRANSITION RATE	EDGE ELEVATION	CROSS SLOPE	ELEVATION CORRECTON	TRANSITION RATE	EDGE ELEVATION	WIDTH	CROSS SLOPE	ELEVATION CORRECTON	TRANSITION RATE	EDGE ELEVATION	
853+86.76	733.27	0.025	0.30		733.57	-0.0058	-0.07		733.50	-0.0217	-0.26		733.24						EX.
854+00.00	733.41	0.023	0.28		733.69	-0.0069	-0.08		733.61	-0.0188	-0.23		733.38						
854+25.00	733.68	0.0195	0.23		733.91	-0.011	-0.13		733.78	-0.0134	-0.16		733.62						
854+50.00	733.95	0.016	0.19		734.14	-0.008	-0.10		734.05	-0.008	-0.10		733.96						
854+75.00	734.22	0.016	0.19		734.41	-0.005	-0.06		734.36	-0.005	-0.06		734.30						
855+00.00	734.49	0.016	0.19		734.68	-0.001	-0.01		734.67	-0.001	-0.01		734.65						
855+09.45	734.59	0.016	0.19		734.78	0.000	0.00		734.78	0.000	0.00		734.78						FLAT
855+25.00	734.76	0.016	0.19		734.95	0.002	0.02		734.98	0.002	0.02		735.00						
855+50.00	735.03	0.016	0.19		735.22	0.005	0.06		735.29	0.005	0.06	213:1	735.35						
855+75.00	735.30	0.016	0.19		735.49	0.009	0.11		735.59	0.009	0.11		735.70						
856+00.00	735.57	0.016	0.19		735.76	0.012	0.14		735.90	0.018	0.14		736.04						
856+25.00	735.83	0.016	0.19		736.02	0.015	0.18		736.20	0.015	0.18		736.38						
856+32.13	735.90	0.016	0.19		736.09	0.016	0.19		736.29	0.016	0.19		736.48						
856+32.90	735.91	0.016	0.19		736.10	0.016	0.19		736.30	0.016	0.19		736.49						PC
856+50.00	736.08	0.018	0.22	63↓:1	736.30	0.018	0.22		736.52	0.018	0.22		736.74	0.03	0.018	0.00		736.74	
856+75.00	736.32	0.022	0.26		736.58	0.022	0.26		736.84	0.022	0.26		737.10	0.16	0.022	0.00		737.10	
856+85.81	736.42	0.023	0.28		736.70	0.023	0.28		736.97	0.023	0.28		737.25	0.25	0.023	0.01		737.25	FS
857+00.00	736.55	0.023	0.28		736.83	0.023	0.28		737.10	0.023	0.28		737.38	0.40	0.023	0.01		737.39	
857+25.00	736.77	0.023	0.28		737.05	0.023	0.28		737.32	0.023	0.28		737.60	0.75	0.023	0.02		737.62	
857+50.00	736.99	0.023	0.28		737.27	0.023	0.28		737.54	0.023	0.28		737.82	1.20	0.023	0.03		737.85	
857+75.00	737.21	0.023	0.28		737.49	0.023	0.28		737.76	0.023	0.28		738.04	1.77	0.023	0.04		738.08	
858+00.00	737.43	0.023	0.28		737.71	0.023	0.28		737.98	0.023	0.28		738.26	2.45	0.023	0.06		738.31	
858+10.39	737.52	0.023	0.28		737.80	0.023	0.28		738.07	0.023	0.28	↑	738.35	2.77	0.023	0.06		738.41	FS
858+25.00	737.65	0.021	0.25		737.90	0.021	0.25		738.16	0.021	0.25		738.41	3.24	0.021	0.07		738.48	
858+50.00	737.87	0.018	0.22		738.08	0.018	0.22		738.30	0.018	0.22		738.51	4.14	0.018	0.07		738.59	
858+63.34	737.99	0.016	0.19		738.18	0.016	0.19		738.37	0.016	0.19		738.57	4.66	0.016	0.07		738.64	PT
858+75.00	738.09	0.015	0.18		738.26	0.015	0.18		738.44	0.015	0.18		738.61	5.14	0.015	0.08		738.69	
859+00.00	738.31	0.011	0.13		738.45	0.011	0.13		738.58	0.011	0.13		738.72	6.14	0.011	0.07		738.79	
859+25.00	738.53	0.008	0.10		738.63	0.008	0.10		738.72	0.008	0.10		738.82	7.15	0.008	0.06		738.88	
859+50.00	738.75	0.005	0.06		738.81	0.005	0.06		738.87	0.005	0.06	213:1	738.92	8.15	0.005	0.04		738.96	
859+75.00	738.97	0.002	0.02		738.99	0.002	0.02		739.01	0.002	0.02		739.03	9.16	0.002	0.02		739.04	
859+86.75	739.07	0.000	0.00		739.07	0.000	0.00		739.07	0.000	0.00		739.07	9.63	0.000	0.00		739.07	FLAT
860+00.00	739.19	-0.002	-0.02		739.17	-0.002	-0.02		739.15	-0.002	-0.02		739.13	10.17	-0.002	-0.02		739.11	
860+25.00	739.41	-0.005	-0.06		739.35	-0.005	-0.06		739.29	-0.005	-0.06		739.23	11.17	-0.005	-0.06		739.17	
860+50.00	739.63	-0.008	-0.10		739.53	-0.008	-0.10		739.43	-0.008	-0.10		739.33	12.18	-0.008	-0.10		739.23	
860+75.00	739.85	-0.012	-0.14		739.71	-0.012	-0.14		739.57	-0.012	-0.14		739.44	13.18	-0.012	-0.16		739.28	

CALCULATED JAP
CHECKED JSS

SUPERELEVATION TABLE - WEST END TRANS. I-70 EB
STA 853+86.76 TO STA 860+75.00

FRA-70-14.54

1051
2317

ms consultants, inc.

PLOT.CEL

ms consultants, inc.
msconsultants.com

FOR SUPERELEVATION BREAKPOINT ROUNDING SEE THE SUPERELEVATION DIAGRAM FOLLOWING THE TRANS I-70 EB (WEST SIDE) SUPERELEVATION TABLES

SUPERELEVATION TABLE

P.I. STA. 862+81.18 | Dc = 1°00'00"

INSIDE EDGE (PROFILE GRADE)		RIGHT SIDE, 12'				RIGHT SIDE, 24'				RIGHT SIDE, 36' - 41.24'					REMARKS
STATION	ELEVATION	CROSS SLOPE	ELEVATION CORRECTON	TRANSITION RATE	EDGE ELEVATION	CROSS SLOPE	ELEVATION CORRECTON	TRANSITION RATE	EDGE ELEVATION	WIDTH	CROSS SLOPE	ELEVATION CORRECTON	TRANSITION RATE	EDGE ELEVATION	
861+00.00	740.07	-0.015	-0.18		739.89	-0.015	-0.18		739.72	12.00	-0.015	-0.18		739.54	
861+10.15	740.16	-0.016	-0.19		739.97	-0.016	-0.19		739.77	12.00	-0.016	-0.19		739.58	PC
861+25.00	740.29	-0.018	-0.22		740.07	-0.018	-0.22		739.86	12.00	-0.018	-0.22	213:1	739.64	
861+50.00	740.51	-0.021	-0.25		740.25	-0.021	-0.25		740.00	12.00	-0.021	-0.25		739.74	
861+63.10	740.63	-0.023	-0.28		740.35	-0.023	-0.28		740.07	12.00	-0.023	-0.28		739.80	FS
861+75.00	740.73	-0.023	-0.28		740.45	-0.023	-0.28		740.18	12.00	-0.023	-0.28		739.90	
862+00.00	740.95	-0.023	-0.28		740.67	-0.023	-0.28		740.40	12.00	-0.023	-0.28		740.12	
862+25.00	741.17	-0.023	-0.28		740.89	-0.023	-0.28		740.62	12.00	-0.023	-0.28		740.34	
862+50.00	741.39	-0.023	-0.28		741.11	-0.023	-0.28		740.84	12.00	-0.023	-0.28		740.56	
862+75.00	741.61	-0.023	-0.28		741.33	-0.023	-0.28		741.06	12.00	-0.023	-0.28		740.78	
863+00.00	741.83	-0.023	-0.28		741.55	-0.023	-0.28		741.28	12.00	-0.023	-0.28		741.00	
863+25.00	742.05	-0.023	-0.28		741.77	-0.023	-0.28		741.50	12.00	-0.023	-0.28		741.22	
863+50.00	742.27	-0.023	-0.28		741.99	-0.023	-0.28		741.72	12.00	-0.023	-0.28		741.44	
863+75.00	742.49	-0.023	-0.28		742.21	-0.023	-0.28		741.94	12.00	-0.023	-0.28		741.66	
863+99.20	742.70	-0.023	-0.28		742.43	-0.023	-0.28		742.15	12.00	-0.023	-0.28		741.88	FS
864+00.00	742.71	-0.023	-0.28		742.43	-0.023	-0.28		742.16	12.00	-0.023	-0.28		741.89	
864+25.00	742.93	-0.020	-0.24		742.69	-0.020	-0.24		742.46	12.00	-0.020	-0.24	213:1	742.22	
864+50.00	743.15	-0.016	-0.19		742.95	-0.016	-0.19		742.76	12.00	-0.016	-0.19		742.56	
864+52.11	743.17	-0.016	-0.19		742.97	-0.016	-0.19		742.78	12.00	-0.016	-0.19		742.59	PT
864+52.88	743.18	-0.016	-0.19		742.99	-0.016	-0.19		742.80	12.01	-0.016	-0.19		742.61	NC
864+75.00	743.34	-0.013	-0.16		743.18	-0.016	-0.19		742.99	12.06	-0.016	-0.19		742.80	
865+00.00	743.48	-0.010	-0.12		743.36	-0.016	-0.19		743.17	12.22	-0.016	-0.20		742.98	
865+25.00	743.57	-0.007	-0.08		743.49	-0.016	-0.19		743.29	12.50	-0.016	-0.20		743.09	
865+50.00	743.60	-0.003	-0.04		743.56	-0.016	-0.19		743.37	12.88	-0.016	-0.21		743.16	
865+75.00	743.58	-0.000	0.00	639:1	743.58	-0.016	-0.19		743.39	13.38	-0.016	-0.21		743.17	
865+75.56	743.58	0.000	0.00		743.58	-0.016	-0.19		743.39	13.40	-0.016	-0.21		743.18	FLAT
866+00.00	743.50	0.003	0.04		743.54	-0.016	-0.19		743.35	13.99	-0.016	-0.22		743.13	
866+25.00	743.42	0.006	0.07		743.49	-0.016	-0.19		743.30	14.72	-0.016	-0.24		743.06	
866+50.00	743.36	0.010	0.12		743.48	-0.016	-0.19		743.29	15.55	-0.016	-0.25		743.04	
866+75.00	743.33	0.013	0.16		743.49	-0.016	-0.19		743.30	16.43	-0.016	-0.26		743.04	
866+98.25	743.34	0.016	0.19		743.53	-0.016	-0.19		743.34	17.24	-0.016	-0.28		743.06	NC

CALCULATED | CHECKED

SUPERELEVATION TABLE - WEST END TRANS. I-70 EB
STA 861+00.00 TO STA 866+98.25

FRA-70-14.54

1052
2317

ms consultants, inc.

Batchplot Spec: \\msconsultants.com\files\production\03\60\06634_2E\standards\plotdrv\batchplt.spc
Pen Table: \\msconsultants.com\files\Standards\usth\ohdot\V8i\ms\plotting\pen\V8i_ms_std.tbl PCF: ohdotV8i
Plot Driver: \\msconsultants.com\files\Standards\usth\ohdot\v8i\ms\plotting\PDF.pltcfg PCF: 60-06634_2E_Columbus
Ohio DOT Workspace
70\71 East Interchange 2E
www.msconsultants.com
1" 0.5" 0
Model: Sheet
Printed: 6/19/2018 @ 8:59:00 AM
File: N:\03\60\06634_2E\roadway\sheets\1052316004.DGN
View: FENCE_VIEW1
By: jdouglas
34" x 22"

34" x 22"
Model: Sheet View: FENCE_VIEW1
Printed: 6/19/2018 @ 8:59:01 AM By: jdouglas
File: N:\03\60\06634_2E\roadway\sheets\1053222GE200.DGN
Batchplot Spec: \\msconsultants.com\files\production\03\60\06634_2E\standards\plotdrv\batchplt.spc
Pen Table: N:\03\60\06634_2E\standards\tables\V8i_ms_std_06634_2D_Plan View.tbl
Plot Driver: \\msconsultants.com\files\Standards\ustn\ohdot\v8i\ms\plotting\PDF.pltcfg
DGF: ohdotV8i
PCF: 60-06634_2E_Columbus
Ohio DOT Workspace
70\71 East Interchange 2E
0 0.5" 1"
ms consultants, inc.
msconsultants.com
PLOT.CEL
www.msconsultants.com

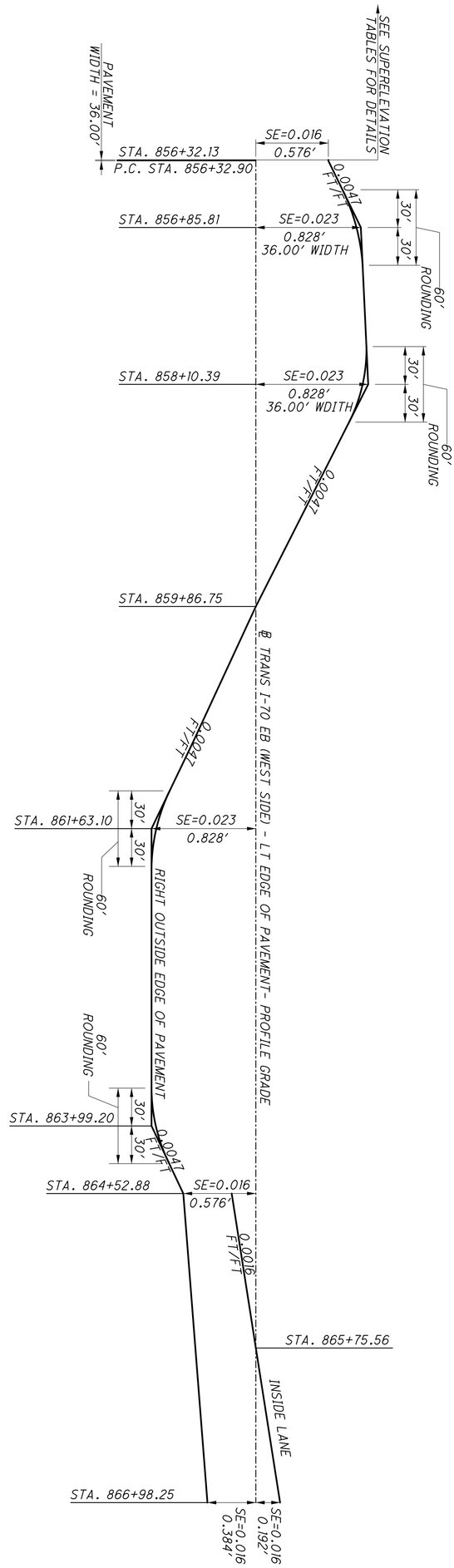

PLOT.CEL

ms consultants, inc.
msconsultants.com

www.msconsultants.com

Ohio DOT Workspace
70\71 East Interchange 2E

1" 0.5" 0

PDF: ohdot\V8i
PCF: 60-06634_2E_Columbus

Batchplot Spec: \\msconsultants.com\Files\Production\03\60\06634_2E\standards\plotdr\batchplt.spc
Pen Table: \\msconsultants.com\Files\Standards\ustn\ohdot\V8i\ms\plotting\pen\V8i_ms_std.tbl
Plot Driver: \\msconsultants.com\Files\Standards\ustn\ohdot\v8i\ms\plotting\PDF.pltcfg

Model: Sheet
Printed: 6/19/2018 @ 8:59:30 AM
File: N:\03\60\06634_2E\roadway\sheets\1053226E06.DGN

View: FENCE_VIEW1
By: jdoughs

34" x 22"

SUPERELEVATION TABLE

P.I. STA. 787+78.67 | Dc = 1°28'00"

STATION	INSIDE EDGE (PROFILE GRADE)		RIGHT SIDE, 28'				RIGHT SIDE, 40'				RIGHT SIDE, 52'				REMARKS
	OFFSET	ELEVATION	CROSS SLOPE	ELEVATION CORRECTON	TRANSITION RATE	LANE ELEVATION	CROSS SLOPE	ELEVATION CORRECTON	TRANSITION RATE	EDGE ELEVATION	CROSS SLOPE	ELEVATION CORRECTON	TRANSITION RATE	EDGE ELEVATION	
778+86.92	16.00	776.98	0.016	0.19		777.17	0.016	0.19		777.36	-0.016	-0.19		777.17	NC
779+00.00	16.00	777.47	0.014	0.17		777.64	0.014	0.17		777.82	-0.016	-0.19		777.62	
779+25.00	16.00	778.41	0.011	0.13		778.55	0.011	0.13		778.68	-0.016	-0.19		778.49	
779+50.00	16.00	779.35	0.008	0.10		779.45	0.008	0.10		779.55	-0.016	-0.19		779.35	
779+75.00	16.00	780.29	0.005	0.06		780.35	0.005	0.06		780.41	-0.016	-0.19		780.22	
780+00.00	16.00	781.23	0.002	0.02		781.25	0.002	0.02		781.28	-0.016	-0.19		781.09	
780+14.84	16.00	781.79	0.000	0.00		781.79	0.000	0.00	3331	781.79	-0.016	-0.19		781.60	FLAT
780+25.00	16.00	782.17	-0.001	-0.01		782.16	-0.001	-0.01		782.14	-0.016	-0.19		781.95	
780+50.00	16.00	783.11	-0.004	-0.05		783.06	-0.004	-0.05		783.01	-0.016	-0.19		782.82	
780+75.00	16.00	784.05	-0.008	-0.10		783.96	-0.008	-0.10		783.87	-0.016	-0.19		783.68	
781+00.00	16.00	784.99	-0.011	-0.13		784.86	-0.011	-0.13		784.74	-0.016	-0.19		784.55	
781+25.00	16.00	785.92	-0.014	-0.17		785.75	-0.014	-0.17		785.59	-0.016	-0.19		785.36	*
781+42.92	16.00	786.57	-0.016	-0.19		786.38	-0.016	-0.19		786.18	-0.016	-0.19		785.94	*
781+50.00	16.00	786.82	-0.017	-0.20		786.62	-0.017	-0.20		786.41	-0.017	-0.20		786.15	
781+75.00	16.00	787.69	-0.020	-0.24		787.45	-0.020	-0.24		787.21	-0.020	-0.24		786.97	
782+00.00	16.00	788.54	-0.023	-0.28		788.26	-0.023	-0.28		787.98	-0.023	-0.28		787.71	
782+12.25	16.00	788.95	-0.025	-0.30		788.65	-0.025	-0.30		788.35	-0.025	-0.30		788.06	PC
782+25.00	16.00	789.36	-0.026	-0.31		789.05	-0.026	-0.31		788.73	-0.026	-0.31	2221	788.42	
782+50.00	16.00	790.15	-0.029	-0.35		789.80	-0.029	-0.35		789.45	-0.029	-0.35		789.10	
782+75.00	16.00	790.92	-0.033	-0.40		790.53	-0.033	-0.40		790.14	-0.033	-0.40		789.75	
783+00.00	16.00	791.66	-0.036	-0.43		791.23	-0.036	-0.43		790.81	-0.036	-0.43		790.38	
783+10.92	16.00	791.98	-0.037	-0.44		791.53	-0.037	-0.44		791.09	-0.037	-0.44		790.65	FS
783+25.00	16.00	792.38	-0.037	-0.44		791.93	-0.037	-0.44		791.49	-0.037	-0.44		791.04	
783+50.00	16.00	793.06	-0.037	-0.44		792.62	-0.037	-0.44		792.18	-0.037	-0.44		791.73	
783+75.00	16.00	793.72	-0.037	-0.44		793.28	-0.037	-0.44		792.84	-0.037	-0.44		792.39	
784+00.00	16.00	794.36	-0.037	-0.44		793.92	-0.037	-0.44		793.47	-0.037	-0.44		793.03	
784+25.00	16.00	794.97	-0.037	-0.44		794.52	-0.037	-0.44		794.08	-0.037	-0.44		793.63	
784+50.00	16.00	795.55	-0.037	-0.44		795.10	-0.037	-0.44		794.66	-0.037	-0.44		794.22	
784+75.00	16.00	796.10	-0.037	-0.44		795.66	-0.037	-0.44		795.21	-0.037	-0.44		794.77	
785+00.00	16.00	796.63	-0.037	-0.44		796.19	-0.037	-0.44		795.74	-0.037	-0.44		795.30	
785+25.00	16.00	797.13	-0.037	-0.44		796.69	-0.037	-0.44		796.24	-0.037	-0.44		795.80	
785+50.00	16.00	797.61	-0.037	-0.44		797.16	-0.037	-0.44		796.72	-0.037	-0.44		796.27	
785+75.00	16.00	798.05	-0.037	-0.44		797.61	-0.037	-0.44		797.17	-0.037	-0.44		796.72	
786+00.00	16.00	798.48	-0.037	-0.44		798.03	-0.037	-0.44		797.59	-0.037	-0.44		797.14	
786+25.00	16.00	798.87	-0.037	-0.44		798.43	-0.037	-0.44		797.98	-0.037	-0.44		797.54	
786+50.00	16.00	799.24	-0.037	-0.44		798.79	-0.037	-0.44		798.35	-0.037	-0.44		797.91	
786+75.00	16.00	799.58	-0.037	-0.44		799.14	-0.037	-0.44		798.69	-0.037	-0.44		798.25	
787+00.00	16.00	799.90	-0.037	-0.44		799.45	-0.037	-0.44		799.01	-0.037	-0.44		798.56	
787+25.00	16.00	800.18	-0.037	-0.44		799.74	-0.037	-0.44		799.30	-0.037	-0.44		798.85	
787+50.00	16.00	800.45	-0.037	-0.44		800.00	-0.037	-0.44		799.56	-0.037	-0.44		799.11	
787+75.00	16.00	800.68	-0.037	-0.44		800.24	-0.037	-0.44		799.79	-0.037	-0.44		799.35	
788+00.00	16.00	800.89	-0.037	-0.44		800.45	-0.037	-0.44		800.00	-0.037	-0.44		799.56	
788+25.00	16.00	801.07	-0.037	-0.44		800.63	-0.037	-0.44		800.18	-0.037	-0.44		799.74	
788+50.00	16.00	801.23	-0.037	-0.44		800.78	-0.037	-0.44		800.34	-0.037	-0.44		799.90	
788+75.00	16.00	801.36	-0.037	-0.44		800.91	-0.037	-0.44		800.47	-0.037	-0.44		800.03	
789+00.00	16.00	801.46	-0.037	-0.44		801.02	-0.037	-0.44		800.57	-0.037	-0.44		800.13	
789+25.00	16.00	801.54	-0.037	-0.44		801.09	-0.037	-0.44		800.65	-0.037	-0.44		800.20	
789+50.00	16.00	801.58	-0.037	-0.44		801.14	-0.037	-0.44		800.70	-0.037	-0.44		800.25	
789+75.00	16.00	801.61	-0.037	-0.44		801.16	-0.037	-0.44		800.72	-0.037	-0.44		800.28	

NOTE:
SEE PAVEMENT DETAIL SHEET FOR ELEVATIONS ALONG 2E LANE TAPER INSIDE MEDIAN LANE. FUTURE PROJECT 2D WILL BUILD THE REMAINDER OF I-70 EB.

(1) THE PAVEMENT CROSS SLOPES AND PROFILE GRADE WILL NOT DEVIATE FORM FUTURE PROJECT 2D PLAN. I-70 EB INSIDE LANE IS BEING TAPERED DOWN FORM 3 LANES TO 2 LANES BEFORE THE BRIDGE OVER RAMP N4.

* = SUPERELEVATION BREAKPOINT ROUNDING

CALCULATED | CHECKED

SUPERELEVATION TABLE - I-70 EB
STA 778+86.92 TO STA 789+75.00

FRA-70-14.54

1054
2317

ms consultants, inc.

PLOT.CEL

ms consultants, inc.
msconsultants.com

Ohio DOT Workspace
70\71 East Interchange 2E
www.msconsultants.com

1"
0.5"
0

Batchplot Spec: \\msconsultants.com\files\production\03\60\06634_2E\standards\plotdir\batchplt.spc
Pen Table: \\msconsultants.com\files\Standards\astm\ohdot\V8i\ms\plotting\pen\V8i_ms_std.tbl PCF: ohdotV8i
Plot Driver: \\msconsultants.com\files\Standards\astm\ohdot\v8i\ms\plotting\PDF.pltcfg PCF: 60-06634_2E_Columbus

Model: Sheet
Printed: 6/19/2018 @ 8:59:31 AM View: FENCE_VIEW1
File: N:\03\60\06634_2E\roadway\sheets\105322E007.DGN By: jdouglas

34" x 22"

SUPERELEVATION TABLE

P.I. STA. 787+78.67 (cont) | Dc = 1°28'00"

STATION	INSIDE EDGE (PROFILE GRADE)		RIGHT SIDE, 28'				RIGHT SIDE, 40'				RIGHT SIDE, 52'				RIGHT SIDE, TAPER					REMARKS
	OFFSET	ELEVATION	CROSS SLOPE	ELEVATION CORRECTON	TRANSITION RATE	LANE ELEVATION	CROSS SLOPE	ELEVATION CORRECTON	TRANSITION RATE	EDGE ELEVATION	CROSS SLOPE	ELEVATION CORRECTON	TRANSITION RATE	EDGE ELEVATION	WIDTH	CROSS SLOPE	ELEVATION CORRECTON	TRANSITION RATE	EDGE ELEVATION	
790+00.00	16.00	801.60	-0.037	-0.44		801.16	-0.037	-0.44		800.72	-0.037	-0.44		800.27						
790+25.00	16.00	801.57	-0.037	-0.44		801.13	-0.037	-0.44		800.68	-0.037	-0.44		800.24						
790+50.00	16.00	801.52	-0.037	-0.44		801.07	-0.037	-0.44		800.63	-0.037	-0.44		800.18						
790+75.00	16.00	801.43	-0.037	-0.44		800.99	-0.037	-0.44		800.54	-0.037	-0.44		800.10						
791+00.00	16.00	801.32	-0.037	-0.44		800.88	-0.037	-0.44		800.43	-0.037	-0.44		799.99						
791+25.00	16.00	801.18	-0.037	-0.44		800.74	-0.037	-0.44		800.30	-0.037	-0.44		799.85						
791+50.00	16.00	801.02	-0.037	-0.44		800.58	-0.037	-0.44		800.13	-0.037	-0.44		799.69						
791+75.00	16.00	800.83	-0.037	-0.44		800.39	-0.037	-0.44		799.94	-0.037	-0.44		799.50						
792+00.00	16.00	800.61	-0.037	-0.44		800.17	-0.037	-0.44		799.73	-0.037	-0.44		799.28						
792+25.00	16.00	800.36	-0.037	-0.44		799.92	-0.037	-0.44		799.48	-0.037	-0.44		799.03						
792+38.58	16.00	800.21	-0.037	-0.44		799.77	-0.037	-0.44		799.32	-0.037	-0.44		798.87						FS *
792+50.00	16.00	800.07	-0.036	-0.43		799.65	-0.036	-0.43		799.22	-0.036	-0.43		798.79						
792+75.00	16.00	799.74	-0.032	-0.38		799.35	-0.032	-0.38		798.96	-0.032	-0.38		798.57						
793+00.00	16.00	799.37	-0.029	-0.35		799.02	-0.029	-0.35		798.66	-0.029	-0.35		798.31						
793+25.00	16.00	798.95	-0.026	-0.31		798.64	-0.026	-0.31		798.32	-0.026	-0.31	2221	798.01						
793+37.25	16.00	798.74	-0.025	-0.30		798.44	-0.025	-0.30		798.14	-0.025	-0.30		797.85						PT
793+50.00	16.00	798.50	-0.023	-0.28		798.22	-0.023	-0.28		797.94	-0.023	-0.28		797.67						
793+75.00	16.00	798.00	-0.020	-0.24		797.76	-0.020	-0.24		797.52	-0.020	-0.24		797.29						
794+00.00	16.00	797.47	-0.017	-0.20		797.27	-0.017	-0.20		797.06	-0.017	-0.20		796.86						
794+06.58	16.00	797.32	-0.016	-0.19		797.13	-0.016	-0.19		796.94	-0.016	-0.19		796.74						
794+25.00	16.00	796.89	-0.014	-0.17		796.73	-0.014	-0.17		796.56	-0.016	-0.19		796.37						
794+50.00	16.00	796.27	-0.011	-0.13		796.15	-0.011	-0.13		796.02	-0.016	-0.19		795.83						
794+75.00	16.00	795.61	-0.007	-0.08		795.52	-0.007	-0.08		795.43	-0.016	-0.19		795.24						
795+00.00	16.00	794.91	-0.004	-0.05		794.86	-0.004	-0.05		794.81	-0.016	-0.19		794.62						
795+21.22	16.00	794.30	-0.002	-0.02		794.26	-0.002	-0.02		794.26	-0.016	-0.19		794.07	12.00	-0.016	-0.19		793.88	
795+25.00	16.00	794.19	-0.001	-0.01		794.18	-0.001	-0.01		794.16	-0.016	-0.19		793.97	11.92	-0.016	-0.19		793.78	
795+34.58	16.00	793.92	0.000	0.00		793.92	0.000	0.00	3331	793.92	-0.016	-0.19		793.73	11.73	-0.016	-0.19		793.54	FLAT
795+50.00	16.00	793.47	0.002	0.02		793.50	0.002	0.02		793.52	-0.016	-0.19		793.33	11.42	-0.016	-0.18		793.15	
795+75.00	16.00	792.75	0.005	0.06		792.81	0.005	0.06		792.87	-0.016	-0.19		792.68	10.92	-0.016	-0.17		792.51	
796+00.00	16.00	792.03	0.008	0.10		792.13	0.008	0.10		792.23	-0.016	-0.19		792.04	10.42	-0.016	-0.17		791.87	
796+25.00	16.00	791.31	0.011	0.13		791.45	0.011	0.13		791.58	-0.016	-0.19		791.39	9.92	-0.016	-0.16		791.23	
796+50.00	16.00	790.59	0.014	0.17		790.77	0.014	0.17		790.94	-0.016	-0.19		790.75	9.42	-0.016	-0.15		790.60	
796+62.58	16.00	790.23	0.016	0.19		790.42	0.016	0.19		790.62	-0.016	-0.19		790.42	9.17	-0.016	-0.15		790.28	NC

* = SUPERELEVATION BREAKPOINT ROUNDING

CALCULATED | CHECKED

SUPERELEVATION TABLE - I-70 EB
STA 790+00.00 TO STA 796+62.58

FRA-70-14.54

1055
2317

ms consultants, inc.

PLOT.CEL

ms consultants, inc.
msconsultants.com

www.msconsultants.com
Ohio DOT Workspace
70\71 East Interchange 2E

0 0.5" 1"

Batchplot Spec: \\msconsultants.com\files\production\03\60\06634_2E\standards\plotdrv\batchplt.spc
Pen Table: \\msconsultants.com\files\Standards\usth\ohdot\V8i\ms\plotting\pen\V8i_ms_std.tbl
Plot Driver: \\msconsultants.com\files\Standards\usth\ohdot\V8i\ms\plotting\PDF.pltcfg
PDF: ohdotV8i
PCF: 60-06634_2E_Columbus

Model: Sheet
Printed: 6/19/2018 @ 8:59:33 AM
File: N:\03\60\06634_2E\roadway\sheets\05322GE009.dgn
View: FENCE_VIEW1
By: jdouglas

34" x 22"

SUPERELEVATION TABLE

P.I. STA. 872+27.67 | Dc = 3°00'00"

LEFT SIDE					CENTERLINE CONTROL		RIGHT SIDE					REMARKS
EDGE ELEVATION	TRANSITION RATE	ELEVATION CORRECTION	CROSS SLOPE	WIDTH	STATION	PROFILE GRADE	WIDTH	CROSS SLOPE	ELEVATION CORRECTON	TRANSITION RATE	EDGE ELEVATION	
744.94		0.32	0.020	16.00	869+83.64	744.62						NC *
745.36		0.40	0.025	16.00	870+00.00	744.96						
746.07	200:1	0.53	0.033	16.00	870+25.00	745.54						
746.42		0.59	0.037	16.00	870+36.97	745.83						PC
746.83		0.66	0.041	16.00	870+50.00	746.17						
747.26		0.72	0.045	16.00	870+63.64	746.54						FS *
747.58		0.72	0.045	16.00	870+75.00	746.86						
748.34		0.72	0.045	16.00	871+00.00	747.62						
749.16		0.72	0.045	16.00	871+25.00	748.44						
750.03		0.72	0.045	16.00	871+50.00	749.31						
750.98		0.72	0.045	16.00	871+75.00	750.26						
751.98		0.72	0.045	16.00	872+00.00	751.26						
753.04		0.72	0.045	16.00	872+25.00	752.32						
754.17		0.72	0.045	16.00	872+50.00	753.45						
755.35		0.72	0.045	16.00	872+75.00	754.63						
756.60		0.72	0.045	16.00	873+00.00	755.88						
757.84		0.72	0.045	16.00	873+25.00	757.12						
759.08		0.72	0.045	16.00	873+50.00	758.37						*
759.50		0.72	0.045	16.00	873+58.64	758.80						FS
760.27		0.65	0.041	16.00	873+75.00	759.62						
761.42		0.5*	0.034	16.00	874+00.00	760.87						
762.21		0.48	0.030	16.00	874+17.10	761.72						PT
762.57		0.45	0.028	16.00	874+25.00	762.12						
763.71		0.34	0.022	16.00	874+50.00	763.37						
764.86		0.24	0.015	16.00	874+75.00	764.62						
765.97		0.14	0.009	16.00	875+00.00	765.83						
766.99		0.04	0.002	16.00	875+25.00	766.95						
767.34		0.00	0.000	16.00	875+34.04	767.34						FLAT
767.94	244:1	-0.07	-0.004	16.00	875+50.00	768.00						
768.80		-0.17	-0.011	16.00	875+75.00	768.97						
769.59		-0.27	-0.017	16.00	876+00.00	769.86						
770.30		-0.37	-0.023	16.00	876+25.00	770.67						
770.93		-0.48	-0.030	16.00	876+50.00	771.40						
771.47		-0.58	-0.036	16.00	876+75.00	772.05						
771.61		-0.61	-0.038	16.00	876+82.16	772.22						PC
771.94		-0.68	-0.043	16.00	877+00.00	772.62						
772.33		-0.78	-0.049	16.00	877+25.00	773.11						
772.63		-0.89	-0.055	16.00	877+50.00	773.52						
772.70		-0.91	-0.057	16.00	877+56.22	773.61						FS

* = SUPERELEVATION BREAKPOINT ROUNDING

SUPERELEVATION TABLE

P.I. STA. 879+23.61 | Dc = 6°30'00"

LEFT SIDE					CENTERLINE CONTROL		RIGHT SIDE					REMARKS
EDGE ELEVATION	TRANSITION RATE	ELEVATION CORRECTION	CROSS SLOPE	WIDTH	STATION	PROFILE GRADE	WIDTH	CROSS SLOPE	ELEVATION CORRECTON	TRANSITION RATE	EDGE ELEVATION	
772.70		-0.91	-0.057	16.00	877+56.22	773.61						FS
772.94		-0.92	-0.057	16.00	877+75.00	773.85						
773.23		-0.91	-0.057	16.00	878+00.00	774.14						
773.52		-0.91	-0.057	16.00	878+25.00	774.43						
773.81		-0.91	-0.057	16.00	878+50.00	774.72						
774.10		-0.91	-0.057	16.00	878+75.00	775.01						
774.39		-0.91	-0.057	16.00	879+00.00	775.30						
774.68		-0.91	-0.057	16.00	879+25.00	775.59						
774.97		-0.91	-0.057	16.00	879+50.00	775.88						
775.26		-0.91	-0.057	16.00	879+75.00	776.17						
775.55		-0.91	-0.057	16.00	880+00.00	776.46						
775.84		-0.91	-0.057	16.00	880+25.00	776.75						
776.13		-0.91	-0.057	16.00	880+50.00	777.04						
776.42		-0.91	-0.057	16.00	880+75.00	777.33						
776.71		-0.91	-0.057	16.00	881+00.00	777.62						
776.86		-0.91	-0.057	16.00	881+12.57	777.77						FS
777.07		-0.84	-0.053	16.00	881+25.00	777.91						
777.49		-0.71	-0.044	16.00	881+50.00	778.20						
777.55		-0.69	-0.043	16.00	881+53.50	778.24						PT
777.88		-0.61	-0.036	17.08	881+75.00	778.49	1.62	0.036	0.06		778.55	
778.28	185:1	-0.50	-0.028	18.33	882+00.00	778.78	3.50	0.027	0.10		778.88	
778.70		-0.37	-0.019	19.59	882+25.00	779.07	5.38	0.019	0.10		779.17	
779.14		-0.22	-0.011	20.84	882+50.00	779.36	7.27	0.011	0.08		779.44	
779.55		-0.05	-0.002	22.10	882+75.00	779.60	9.15	0.002	0.02	247:1	779.62	
779.65		0.00	0.000	22.42	882+81.47	779.65	9.64	0.000	0.00		779.65	FLAT
779.90		0.15	0.006	23.35	883+00.00	779.75	11.03	-0.006	-0.07		779.68	
780.04		0.25	0.011	24.00	883+12.85	779.79	12.00	-0.011	-0.13		779.66	
780.16		0.35	0.015	24.00	883+25.00	779.80	12.43	-0.015	-0.18		779.62	
780.19		0.38	0.016	24.00	883+28.86	779.80	12.56	-0.016	-0.20		779.60	NC
780.14		0.38	0.016	24.00	883+50.00	779.76	13.31	-0.016	-0.21		779.55	NC
780.16		0.40	0.016	24.00	883+52.24	779.75	13.39	-0.016	-0.21		779.54	NC *
780.16	152:1	0.53	0.022	24.00	883+75.00	779.62	14.19	-0.022	-0.32	227:1	779.31	
780.09		0.70	0.029	24.00	884+00.00	779.39	15.07	-0.029	-0.44		778.95	

SUPERELEVATION TABLE

P.I. STA. 885+59.63 | Dc = 8°00'00"

780.02		0.78	0.033	24.00	884+12.85	779.23	15.52	-0.033	-0.51		778.73	PC
779.93	152:1	0.86	0.036	24.00	884+25.00	779.06	15.94	-0.036	-0.57	227:1	778.49	
779.72		0.97	0.041	24.00	884+43.15	778.77	16.57	-0.041	-0.68		778.10	FS *
779.61		0.98	0.041	24.00	884+50.00	778.64	16.81	-0.041	-0.69		777.95	
779.37		0.98	0.041	24.00	884+62.85	778.39	17.25	-0.041	-0.71		777.68	
779.11		0.98	0.041	24.00	884+75.00	778.12	17.25	-0.041	-0.71		777.42	
778.49		0.98	0.041	24.00	885+00.00	777.51	17.25	-0.041	-0.71		776.80	
777.77		0.97	0.041	24.00	885+25.00	776.80	17.25	-0.041	-0.71		776.09	*
777.59		0.96	0.041	24.00	885+30.27	776.64	17.25	-0.041	-0.71		775.94	FS
776.85		0.85	0.036	24.00	885+50.00	776.00	17.25	-0.036	-0.61		775.39	
775.87		0.69	0.029	24.00	885+75.00	775.18	17.25	-0.029	-0.50		774.69	
775.04		0.52	0.022	24.00	886+00.00	774.52	17.25	-0.022	-0.38		774.14	
774.38		0.36	0.015	24.00	886+25.00	774.02	17.25	-0.015	-0.26		773.76	
773.89	152:1	0.19	0.008	24.00	886+50.00	773.70	17.25	-0.008	-0.14	212:1	773.56	
773.57		0.03	0.001	24.00	886+75.00	773.54	17.25	-0.001	-0.02		773.52	
773.53		0.00	0.000	24.00	886+79.35	773.53	17.25	0.000	-0.00		773.53	FLAT
773.42		-0.14	-0.006	24.00	887+00.00	773.56	17.25	0.006	0.10		773.65	
773.42		-0.15	-0.006	24.00	887+02.41	773.57	17.25	0.006	0.11		773.68	PT

CALCULATED | CHECKED

SUPERELEVATION TABLE - RAMP N1
STA 869+83.64 TO STA 887+02.41

FRA-70-14.54

1056
2317

PLOT.CEL

ms consultants, inc.
msconsultants.com

www.msconsultants.com

Ohio DOT Workspace
70\71 East Interchange 2E

1" 0.5" 0

Batchplot Spec: \\msconsultants.com\files\production\03\60\06634_2E\standards\plotdrv\batchplt.spc
Pen Table: \\msconsultants.com\files\Standards\usth\ohdot\V8i\ms\plotting\pen\V8i_ms_std.tbl PCF: ohdotV8i
Plot Driver: \\msconsultants.com\files\Standards\usth\ohdot\v8i\ms\plotting\PDF.pltcfg PCF: 60-06634_2E_Columbus

Model: Sheet View: FENCE_VIEW1
Printed: 6/19/2018 @ 8:59:34 AM By: jdouglas
File: N:\03\60\06634_2E\roadway\sheets\05322E010.DGN

34" x 22"

SUPERELEVATION TABLE

P.I. STA. 784+11.62 | Dc = 10°45'00"

LEFT SIDE					CENTERLINE CONTROL		RIGHT SIDE					REMARKS	
EDGE ELEVATION	TRANSITION RATE	ELEVATION CORRECTION	CROSS SLOPE	WIDTH	STATION	PROFILE GRADE	WIDTH	CROSS SLOPE	ELEVATION CORRECTON	TRANSITION RATE	EDGE ELEVATION		
					782+53.06	782.22	13.50	0.051	0.69	447:1	782.91	PC	
					782+59.44	782.09	13.50	0.052	0.70		782.79	FS	
					782+75.00	781.75	13.50	0.052	0.70		782.45		
					783+00.00	781.09	13.50	0.052	0.70		781.79		
					783+25.00	780.28	13.50	0.052	0.70		780.98		
					783+31.43	780.05	13.50	0.052	0.70		780.75		
					783+40.04	779.71	13.62	0.052	0.71		780.42	FS	
					783+50.00	779.25	13.75	0.056	0.77	176:1	779.99		*
					783+60.68	778.72	13.89	0.060	0.83		779.53	FS	*
					783+75.00	778.04	14.09	0.060	0.85		778.89		
					784+00.00	776.86	14.43	0.060	0.87		777.72		
					784+25.00	775.68	14.76	0.060	0.89		776.56		
					784+50.00	774.56	15.10	0.060	0.91		775.47		
					784+75.00	773.54	15.44	0.060	0.93		774.46		
					785+00.00	772.60	15.78	0.060	0.95		773.54		
					785+25.00	771.71	16.00	0.060	0.96		772.67		
					785+50.00	770.67	16.00	0.060	0.96		771.60		*
					785+50.93	770.63	16.00	0.060	0.96		771.56	FS	*

SUPERELEVATION TABLE

P.I. STA. 787+34.15 | Dc = 5°30'00"

					785+61.29	770.20	16.00	0.057	0.90	185:1	771.10	PCC	
					785+71.65	769.77	16.00	0.053	0.85		770.65	FS	*
					785+75.00	769.63	16.00	0.053	0.85		770.50		*
					786+00.00	768.59	16.00	0.053	0.85		769.44		
					786+25.00	767.56	16.00	0.053	0.85		768.40		
					786+50.00	766.60	16.00	0.053	0.85		767.45		
					786+75.00	765.75	16.00	0.053	0.85		766.59		
					787+00.00	764.99	16.00	0.053	0.85		765.83		
					787+25.00	764.32	16.00	0.053	0.85		765.17		
					787+50.00	763.75	16.00	0.053	0.85		764.60		
					787+75.00	763.28	16.00	0.053	0.85		764.13		
					788+00.00	762.91	16.00	0.053	0.85		763.75		
					788+25.00	762.63	16.00	0.053	0.85		763.47		
					788+50.00	762.44	16.00	0.053	0.85		763.29		
					788+75.00	762.36	16.00	0.053	0.85		763.20		
					788+93.65	762.35	16.00	0.053	0.85	213:1	763.20	FS	
					789+00.00	762.37	16.00	0.051	0.82		763.20		*

SUPERELEVATION TABLE

P.I. STA. 790+85.43 | Dc = 3°16'27"

					789+03.89	762.38	16.00	0.050	0.80	213:1	763.20	PCC	
					789+14.13	762.41	16.00	0.047	0.75		763.22	FS	*
					789+25.00	762.47	16.00	0.047	0.75		763.24		*
					789+50.00	762.67	16.00	0.047	0.75		763.42		
					789+75.00	762.97	16.00	0.047	0.75		763.72		
					790+00.00	763.37	16.00	0.047	0.75		764.12		
					790+25.00	763.86	16.00	0.047	0.75		764.61		
					790+50.00	764.44	16.00	0.047	0.75		765.20		
					790+75.00	765.13	16.00	0.047	0.75		765.88		
					791+00.00	765.89	16.00	0.047	0.75		766.64		
					791+07.02	766.10	16.00	0.047	0.75		766.85	FS	

SUPERELEVATION TABLE

LEFT SIDE					CENTERLINE CONTROL		RIGHT SIDE					REMARKS	
EDGE ELEVATION	TRANSITION RATE	ELEVATION CORRECTION	CROSS SLOPE	WIDTH	STATION	PROFILE GRADE	WIDTH	CROSS SLOPE	ELEVATION CORRECTON	TRANSITION RATE	EDGE ELEVATION		

* = SUPERELEVATION BREAKPOINT ROUNDING

CALCULATED | CHECKED

SUPERELEVATION TABLE - RAMP N2
STA 782+53.06 TO STA 791+07.02

FRA-70-14.54

1057
2317

ms consultants, inc.

PLOT.CEL

ms consultants, inc.
msconsultants.com

Ohio DOT Workspace
70\71 East Interchange 2E
www.msconsultants.com

1" 0.5" 0

Batchplot Spec: \\msconsultants.com\files\production\03\60\06634_2E\standards\plotdr\batchplt.spc
Pen Table: \\msconsultants.com\files\Standards\ustn\ohdot\V8\ms\plotting\pen\V8i_ms_std.tbl PDF: ohdotV8i
Plot Driver: \\msconsultants.com\files\Standards\ustn\ohdot\V8\ms\plotting\PDF: 60-06634_2E_Columbus

Model: Sheet View: FENCE_VIEW1
Printed: 6/19/2018 @ 8:59:57 AM By: jdouglas
File: N:\03\60\06634_2E\roadway\sheets\1053220E01.DGN

34" x 22"

SUPERELEVATION TABLE

P.I. STA. = 896+85.26 | Dc = 10°30'00"

LEFT SIDE, 32.00'-34.60'					LEFT SIDE					CENTERLINE CONTROL		RIGHT SIDE					REMARKS
EDGE ELEVATION	TRANSITION RATE	ELEVATION CORRECTION	CROSS SLOPE	WIDTH	EDGE ELEVATION	TRANSITION RATE	ELEVATION CORRECTION	CROSS SLOPE	WIDTH	STATION	PROFILE GRADE	WIDTH	CROSS SLOPE	ELEVATION CORRECTON	TRANSITION RATE	EDGE ELEVATION	
767.39		-0.19	-0.016	11.81	767.58		0.35	0.016	22.17	869+38.14	767.22	1.58	-0.016	-0.03		767.20	NC
767.82		-0.12	-0.010	11.92	767.94		0.36	0.016	22.19	869+50.00	767.59	1.75	-0.016	-0.03		767.56	
768.60	16:1	0.00	0.000	12.07	768.60		0.36	0.016	22.22	869+69.03	768.25	2.04	-0.016	-0.03		768.22	FLAT
768.87		0.04	0.003	12.12	768.83		0.36	0.016	22.23	869+75.00	768.48	2.13	-0.016	-0.03		768.44	
770.09		0.20	0.016	12.33	769.89		0.36	0.016	22.27	870+00.00	769.53	2.51	-0.016	-0.04		769.49	NC
					774.97		0.57	0.016	35.67	871+02.83	774.42	4.11	-0.016	-0.07		774.36	NC *
					775.91		0.43	0.012	35.90	871+25.00	775.48	4.46	-0.012	-0.05		775.42	
					776.20		0.38	0.011	35.97	871+32.01	775.81	4.50	-0.011	-0.05		775.76	PT
					776.43		0.35	0.010	36.00	871+37.72	776.08	4.50	-0.010	-0.04		776.04	
					776.93		0.27	0.007	36.00	871+50.00	776.67	4.50	-0.007	-0.03		776.63	
					777.96		0.10	0.003	36.00	871+75.00	777.86	4.50	-0.003	-0.01		777.85	
					778.59		0.00	0.000	36.00	871+90.37	778.59	4.50	0.000	0.00		778.59	FLAT
					778.99		-0.06	-0.002	36.00	872+00.00	779.05	4.50	0.002	0.01		779.05	
					779.99	167:1	-0.20	-0.006	36.00	872+25.00	780.20	4.50	0.006	0.03		780.22	
					780.87		-0.35	-0.010	36.00	872+50.00	781.22	4.50	0.010	0.04		781.26	
					781.61		-0.49	-0.014	36.00	872+75.00	782.10	4.50	0.014	0.06		782.72	
					782.23		-0.64	-0.018	36.00	873+00.00	782.86	4.50	0.018	0.08		782.94	
					782.71		-0.78	-0.022	36.00	873+25.00	783.49	4.50	0.022	0.10		783.59	
					783.06		-0.93	-0.026	36.00	873+50.00	783.99	4.50	0.026	0.12		784.10	
					783.28		-1.07	-0.030	36.00	873+75.00	784.35	4.50	0.030	0.13		784.48	
					783.37		-1.22	-0.034	36.00	874+00.00	784.58	4.50	0.034	0.15		784.74	

SUPERELEVATION TABLE

P.I. STA. = 877+94.90 | Dc = 6°45'00"

					783.34		-1.33	-0.037	36.00	874+19.36	784.68	4.50	0.037	0.17		784.84	PC
					783.32		-1.36	-0.038	36.00	874+25.00	784.69	4.50	0.038	0.17		784.86	
					783.15	167:1	-1.51	-0.042	36.00	874+50.00	784.66	4.50	0.042	0.19		784.85	
					782.85		-1.65	-0.046	36.00	874+75.00	784.50	4.50	0.046	0.21		784.71	
					782.41		-1.80	-0.050	36.00	875+00.00	784.21	4.50	0.050	0.23		784.44	
					782.91		-1.16	-0.051	22.50	875+09.18	784.07	4.50	0.051	0.23		784.30	
					782.85		-1.17	-0.052	22.50	875+12.35	784.02	4.50	0.052	0.23		784.23	FS *
					782.62		-1.17	-0.052	22.50	875+25.00	783.79	4.50	0.052	0.23		784.01	
					782.07		-1.17	-0.052	22.50	875+50.00	783.24	4.50	0.052	0.23		783.47	
					781.39		-1.17	-0.052	22.50	875+75.00	782.56	4.50	0.052	0.23		782.79	
					780.86		-1.17	-0.052	22.50	875+91.76	782.03	4.50	0.052	0.23		782.26	
					780.57		-1.17	-0.052	22.56	876+00.00	781.74	4.44	0.052	0.23		781.97	
					779.61		-1.18	-0.052	22.75	876+25.00	780.80	4.25	0.052	0.22		781.02	
					778.59		-1.19	-0.052	22.95	876+50.00	779.79	4.06	0.052	0.21		780.00	
					777.58		-1.20	-0.052	23.14	876+75.00	778.78	3.87	0.052	0.20		778.98	
					776.60		-1.21	-0.052	23.33	877+00.00	777.82	3.67	0.052	0.19		778.01	
					775.73		-1.22	-0.052	23.52	877+25.00	776.95	3.48	0.052	0.18		777.13	
					774.95		-1.23	-0.052	23.71	877+50.00	776.18	3.29	0.052	0.17		776.36	
					774.27		-1.24	-0.052	23.86	877+75.00	775.51	3.14	0.052	0.16		775.68	
					773.74		-1.25	-0.052	24.00	877+97.72	774.99	3.00	0.052	0.16		775.15	
					773.69		-1.25	-0.052	24.00	878+00.00	774.94	3.00	0.052	0.16		775.09	
					773.21		-1.25	-0.052	24.00	878+25.00	774.46	3.00	0.052	0.16		774.62	
					772.83		-1.25	-0.052	24.00	878+50.00	774.08	3.00	0.052	0.16		774.24	
					772.55		-1.25	-0.052	24.00	878+75.00	773.80	3.00	0.052	0.16		773.95	
					772.36		-1.25	-0.052	24.00	879+00.00	773.61	3.00	0.052	0.16		773.77	
					772.27		-1.25	-0.052	24.00	879+25.00	773.52	3.00	0.052	0.16		773.68	
					772.28		-1.25	-0.052	24.00	879+50.00	773.53	3.00	0.052	0.16		773.68	
					772.38		-1.25	-0.052	24.00	879+75.00	773.63	3.00	0.052	0.16		773.79	
					772.59		-1.25	-0.052	24.00	880+00.00	773.83	3.00	0.052	0.16		773.99	
					772.88		-1.25	-0.052	24.00	880+25.00	774.13	3.00	0.052	0.16		774.29	
					773.31		-1.25	-0.052	24.00	880+50.00	774.53	3.00	0.052	0.16		774.69	FS *

* = SUPERELEVATION BREAKPOINT ROUNDING

CALCULATED | CHECKED

SUPERELEVATION TABLE - RAMP N3
STA 867+34.23 TO STA 877+75.00

FRA-70-14.54

1058
2317

ms consultants, inc.

PLOT.CEL

ms consultants, inc.
msconsultants.com

www.msconsultants.com
Ohio DOT Workspace
70\71 East Interchange 2E

1"
0.5"
0

Batchplot Spec: \\msconsultants.com\Files\production\03\60\06634_2E\standards\plotdr\batchplt.spc
Pen Table: \\msconsultants.com\Files\Standards\ustn\ohdot\V8i\ms\plotting\pen\V8i_ms_std.tbl
Plot Driver: \\msconsultants.com\Files\Standards\ustn\ohdot\V8i\ms\plotting\PDF: ohdotV8i
PDF: 60-06634_2E_Columbus

34" x 22"

Model: Sheet
Printed: 6/19/2018 @ 9:00:01 AM
File: N:\03\60\06634_2E\roadway\sheets\05322GE012.DGN
View: FENCE_VIEW1
By: jdouglas

SUPERELEVATION TABLE

P.I. STA. = 885+52.10 | Dc = 6°30'00"

LEFT SIDE					CENTERLINE CONTROL		RIGHT SIDE					REMARKS
EDGE ELEVATION	TRANSITION RATE	ELEVATION CORRECTION	CROSS SLOPE	WIDTH	STATION	PROFILE GRADE	WIDTH	CROSS SLOPE	ELEVATION CORRECTON	TRANSITION RATE	EDGE ELEVATION	
773.41		-1.25	-0.052	24.00	880+54.85	774.61	3.00	0.052	0.16		774.78	FS *
773.88		-1.15	-0.048	24.00	880+75.00	775.02	2.63	0.048	0.13		775.14	
774.59		-1.01	-0.042	24.00	881+00.00	775.61	2.18	0.042	0.09		775.70	
775.41		-0.88	-0.037	24.00	881+25.00	776.29	1.73	0.037	0.06		776.36	
775.46	19:1	-0.87	-0.036	24.00	881+26.49	776.34	1.70	0.036	0.06		776.40	PT
776.32		-0.75	-0.031	24.00	881+50.00	777.07	1.27	0.031	0.04		777.11	
777.33		-0.62	-0.026	24.00	881+75.00	777.95	0.82	0.026	0.02		777.97	
778.44		-0.49	-0.020	24.00	882+00.00	778.93	0.37	0.020	0.01		778.94	
779.40		-0.38	-0.016	24.00	882+20.17	779.79						NC
779.74		-0.38	-0.016	24.00	882+27.14	780.10						NC *
780.89		-0.26	-0.011	24.00	882+50.00	781.15						
782.12		-0.14	-0.006	24.00	882+73.78	782.26						
782.18		-0.12	-0.005	23.98	882+75.00	782.31						
783.46		0.00	-0.000	23.65	882+99.66	783.46						FLAT
783.48		0.00	0.000	23.65	883+00.00	783.47						
784.76		0.13	0.006	23.32	883+25.00	784.63						
786.05		0.26	0.011	22.98	883+50.00	785.79						
787.33		0.38	0.017	22.65	883+75.00	786.95						
788.61	206:1	0.49	0.022	22.32	884+00.00	788.11						
789.86		0.61	0.028	21.98	884+25.00	789.25						
790.04		0.62	0.028	21.93	884+28.83	789.41						PC
791.03		0.73	0.033	21.91	884+50.00	790.30						
792.11		0.84	0.039	21.82	884+75.00	791.27						
793.11		0.96	0.044	21.66	885+00.00	792.15						
794.02		1.07	0.050	21.43	885+25.00	792.96						
794.82		1.16	0.055	21.13	885+50.00	793.68						
795.04		1.20	0.057	21.02	885+58.01	793.89						FS *
795.49		1.18	0.057	20.76	885+75.00	794.31						
796.03		1.16	0.057	20.33	886+00.00	794.87						
796.51		1.13	0.057	19.83	886+25.00	795.38						
797.03		1.10	0.057	19.27	886+50.00	795.93						
797.46		1.06	0.057	18.67	886+73.78	796.41						FS/CS *
797.48		1.06	0.057	18.65	886+75.00	796.43						
797.90		0.99	0.054	18.32	887+00.00	796.90						
798.26		0.92	0.051	17.98	887+25.00	797.34						
798.59	5.19:1	0.86	0.049	17.65	887+50.00	797.73						
798.87		0.79	0.046	17.32	887+75.00	798.08						
799.12		0.73	0.043	16.98	888+00.00	798.38						
799.32		0.67	0.040	16.65	888+25.00	798.65						
799.50		0.61	0.038	16.32	888+50.00	798.89						
799.63		0.56	0.035	16.00	888+73.78	799.07						FS/SC

SUPERELEVATION TABLE

P.I. STA. = 891+21.19 | Dc = 1°25'00"

LEFT SIDE					CENTERLINE CONTROL		RIGHT SIDE					REMARKS
EDGE ELEVATION	TRANSITION RATE	ELEVATION CORRECTION	CROSS SLOPE	WIDTH	STATION	PROFILE GRADE	WIDTH	CROSS SLOPE	ELEVATION CORRECTON	TRANSITION RATE	EDGE ELEVATION	
799.63		0.56	0.035	16.00	888+73.78	799.07						FS/SC
799.64		0.56	0.035	16.00	888+75.00	799.08						
799.78		0.56	0.035	16.00	889+00.00	799.22						
799.88		0.56	0.035	16.00	889+25.00	799.32						
799.95		0.56	0.035	16.00	889+50.00	799.39						
800.00		0.56	0.035	16.00	889+75.00	799.44						
800.02		0.56	0.035	16.00	890+00.00	799.46						
800.02		0.56	0.035	16.00	890+25.00	799.46						
799.98		0.56	0.035	16.00	890+50.00	799.42						
799.92		0.56	0.035	16.00	890+75.00	799.36						
799.83		0.56	0.035	16.00	891+00.00	799.27						
799.71		0.56	0.035	16.00	891+25.00	799.15						
799.57		0.56	0.035	16.00	891+50.00	799.01						
799.40		0.56	0.035	16.00	891+75.00	798.84						
799.20		0.56	0.035	16.00	892+00.00	798.64						
798.97		0.56	0.035	16.00	892+25.00	798.41						
798.75		0.56	0.035	16.00	892+50.00	798.19						
798.70		0.56	0.035	16.00	892+56.32	798.14						FS
789.55		0.52	0.033	16.00	892+75.00	798.03						
789.30		0.47	0.029	16.00	893+00.00	797.83						
798.02		0.42	0.026	16.00	893+25.00	797.60						
797.67	5.11:1	0.36	0.023	15.43	893+50.00	797.31						
797.67		0.36	0.023	15.43	893+50.04	797.31						PT
797.29		0.30	0.020	14.93	893+75.00	796.99						
796.87		0.24	0.017	14.43	894+00.00	796.62						
796.74		0.23	0.016	14.29	894+06.85	796.51						NC

* = SUPERELEVATION BREAKPOINT ROUNDING

CALCULATED | CHECKED

SUPERELEVATION TABLE - RAMP N3
STA 880+54.85 TO STA 894+06.85

FRA-70-14.54

1059
2317

ms consultants, inc.

PLOT.CEL
ms consultants, inc.
msconsultants.com
www.msconsultants.com
Ohio DOT Workspace
70\71 East Interchange 2E
1" 0.5" 0
Batchplot Spec: \\msconsultants.com\Files\Production\03\60\06634_2E\standards\plotdrv\batchplt.spc
Pen Table: \\msconsultants.com\Files\Standards\ustn\ohdot\V8\ms\plotting\pen\V8i_ms_std.tbl
Plot Driver: \\msconsultants.com\Files\Standards\ustn\ohdot\v8i\ms\plotting\PDF.pltcfg
PDF: ohdotV8i
PDF: 60-06634_2E_Columbus
34" x 22"
Model: Sheet
Printed: 6/19/2018 @ 9:00:02 AM
File: N:\03\60\06634_2E\roadway\sheets\05322GE013.DGN
View: FENCE_VIEW1
By: jdougas

SUPERELEVATION TABLE

P.I. STA. 793+06.62 | Dc = 4°40'00"

LEFT SIDE					CENTERLINE CONTROL		RIGHT SIDE					REMARKS
EDGE ELEVATION	TRANSITION RATE	ELEVATION CORRECTION	CROSS SLOPE	WIDTH	STATION	PROFILE GRADE	WIDTH	CROSS SLOPE	ELEVATION CORRECTON	TRANSITION RATE	EDGE ELEVATION	
755.35		0.19	0.016	12.00	779+90.45	755.16	12.00	-0.016	-0.19		754.97	NC
							24.00	-0.020	-0.24		754.73	
755.56		0.19	0.016	12.00	780+00.00	755.37	12.00	-0.016	-0.19		755.18	
							24.00	-0.016	-0.19		754.99	
755.84		0.19	0.016	12.00	780+13.79	755.65	24.00	-0.016	-0.38		755.27	NC
756.04		0.17	0.014	12.00	780+25.00	755.87	24.00	-0.014	-0.34		755.53	
756.44		0.12	0.010	12.00	780+50.00	756.32	24.00	-0.010	-0.24		756.08	
756.78		0.07	0.006	12.00	780+75.00	756.71	24.00	-0.006	-0.13		756.57	
757.06		0.01	0.001	12.00	781+00.00	757.05	24.00	-0.001	-0.03		757.03	
757.14		-0.00	-0.000	12.00	781+07.12	757.14	24.00	-0.000	-0.00		757.14	FLAT/TS
757.30		-0.04	-0.003	12.18	781+25.00	757.34	24.00	0.003	0.07		757.41	
757.48		-0.09	-0.007	12.46	781+50.00	757.57	24.00	0.007	0.17		757.74	
757.61	493:1	-0.15	-0.011	12.74	781+75.00	757.75	24.00	0.011	0.27	246:1	758.02	
757.68		-0.20	-0.016	13.00	782+00.00	757.88	24.00	0.016	0.38		758.26	
757.67		-0.26	-0.020	13.24	782+25.00	757.95	24.00	0.020	0.48		758.43	
757.65		-0.33	-0.024	13.53	782+50.00	757.97	24.00	0.024	0.58		758.55	
757.55		-0.39	-0.028	13.82	782+75.00	757.94	24.00	0.028	0.68		758.61	
757.39		-0.46	-0.033	14.07	783+00.00	757.85	24.00	0.033	0.78		758.63	
757.18		-0.53	-0.037	14.32	783+25.00	757.71	24.00	0.037	0.88		758.59	
756.92		-0.60	-0.041	14.60	783+50.00	757.51	24.00	0.041	0.98		758.50	
756.59		-0.67	-0.045	14.89	783+75.00	757.27	24.00	0.045	1.08		758.35	
756.24		-0.75	-0.049	15.14	784+00.00	756.99	24.00	0.049	1.19		758.18	
755.89		-0.83	-0.054	15.40	784+25.00	756.72	24.00	0.054	1.29		758.00	
755.59		-0.91	-0.058	15.67	784+50.00	756.47	24.00	0.058	1.39		757.85	
756.52		-0.93	-0.059	15.75	784+57.12	756.41	24.00	0.059	1.42		757.81	FS/SC *
755.35		-0.93	-0.059	15.75	784+75.00	756.27	24.00	0.059	1.42		757.70	
755.20		-0.93	-0.059	15.75	785+00.00	756.13	24.00	0.059	1.42		757.55	
755.12		-0.93	-0.059	15.75	785+25.00	756.05	24.00	0.059	1.42		757.46	
755.09		-0.93	-0.059	15.75	785+50.00	756.02	24.00	0.059	1.42		757.43	
755.11		-0.93	-0.059	15.75	785+75.00	756.04	24.00	0.059	1.42		757.45	
755.19		-0.93	-0.059	15.75	786+00.00	756.12	24.00	0.059	1.42		757.53	
755.32		-0.93	-0.059	15.75	786+25.00	756.25	24.00	0.059	1.42		757.66	
755.50		-0.93	-0.059	15.75	786+50.00	756.43	24.00	0.059	1.42		757.85	
755.74		-0.93	-0.059	15.75	786+75.00	756.67	24.00	0.059	1.42		758.08	
756.03		-0.93	-0.059	15.75	787+00.00	756.96	24.00	0.059	1.42		758.38	
756.38		-0.93	-0.059	15.75	787+25.00	757.31	24.00	0.059	1.42		758.72	
756.78		-0.93	-0.059	15.75	787+50.00	757.71	24.00	0.059	1.42		759.13	
757.23		-0.93	-0.059	15.75	787+75.00	758.16	24.00	0.059	1.42		759.58	
757.74		-0.93	-0.059	15.75	788+00.00	758.67	24.00	0.059	1.42		760.09	
758.31		-0.93	-0.059	15.75	788+25.00	759.24	24.00	0.059	1.42		760.65	
758.92		-0.93	-0.059	15.75	788+50.00	759.85	24.00	0.059	1.42		761.27	
759.60		-0.93	-0.059	15.75	788+75.00	760.52	24.00	0.059	1.42		761.94	
760.32		-0.93	-0.059	15.75	789+00.00	761.25	24.00	0.059	1.42		762.67	
761.10		-0.93	-0.059	15.75	789+25.00	762.03	24.00	0.059	1.42		763.45	
761.91		-0.93	-0.059	15.75	789+50.00	762.84	24.00	0.059	1.42		764.25	
762.71		-0.93	-0.059	15.75	789+75.00	763.64	24.00	0.059	1.42		765.06	
763.20		-0.93	-0.059	15.75	789+90.02	764.13	24.00	0.059	1.42		765.55	

SUPERELEVATION TABLE

LEFT SIDE					CENTERLINE CONTROL		RIGHT SIDE					REMARKS
EDGE ELEVATION	TRANSITION RATE	ELEVATION CORRECTION	CROSS SLOPE	WIDTH	STATION	PROFILE GRADE	WIDTH	CROSS SLOPE	ELEVATION CORRECTON	TRANSITION RATE	EDGE ELEVATION	

CALCULATED | CHECKED

SUPERELEVATION TABLE - RAMP N4
STA 779+90.45 TO STA 789+90.02

FRA-70-14.54

1060
2317

* = SUPERELEVATION BREAKPOINT ROUNDING

ms consultants, inc.

SUPERELEVATION TABLE

P.I. STA. 898+28.67 | Dc = 1°30′00″

REMARKS	LEFT SIDE, 24′ EDGE ELEVATION	LEFT SIDE, 24′ TRANSITION RATE	LEFT SIDE, 24′ ELEVATION CORRECTON	LEFT SIDE, 24′ CROSS SLOPE	LEFT SIDE, 12′ LANE ELEVATION	LEFT SIDE, 12′ TRANSITION RATE	LEFT SIDE, 12′ ELEVATION CORRECTON	LEFT SIDE, 12′ CROSS SLOPE	CENTERLINE CONTROL STATION	CENTERLINE CONTROL PROFILE GRADE	RIGHT SIDE, 12′ CROSS SLOPE	RIGHT SIDE, 12′ ELEVATION CORRECTON	RIGHT SIDE, 12′ TRANSITION RATE	RIGHT SIDE, 12′ EDGE ELEVATION	REMARKS
NC	776.99		-0.19	-0.016	777.18		-0.19	-0.016	900+26.40	777.37	-0.00	-0.02	200:1 □	777.35	
NC	776.52		-0.19	-0.016	776.71		-0.19	-0.016	900+50.00	776.90	-0.011	-0.13		776.77	
NC	776.28		-0.19	-0.016	776.47		-0.19	-0.016	900+61.68	776.67	-0.016	-0.19		776.50	NC *

SUPERELEVATION TABLE

P.I. STA. 910+11.57 | Dc = 0°59′52″

REMARKS	LEFT SIDE, 24′ EDGE ELEVATION	LEFT SIDE, 24′ TRANSITION RATE	LEFT SIDE, 24′ ELEVATION CORRECTON	LEFT SIDE, 24′ CROSS SLOPE	LEFT SIDE, 12′ LANE ELEVATION	LEFT SIDE, 12′ TRANSITION RATE	LEFT SIDE, 12′ ELEVATION CORRECTON	LEFT SIDE, 12′ CROSS SLOPE	CENTERLINE CONTROL STATION	CENTERLINE CONTROL PROFILE GRADE	RIGHT SIDE, 12′ CROSS SLOPE	RIGHT SIDE, 12′ ELEVATION CORRECTON	RIGHT SIDE, 12′ TRANSITION RATE	RIGHT SIDE, 12′ EDGE ELEVATION	REMARKS
NC					767.15		-0.19	-0.016	906+16.50	767.34	-0.016	-0.19		767.18	NC *
					767.08		-0.19	-0.016	906+25.00	767.27	-0.013	-0.16		767.13	
					766.89		-0.19	-0.016	906+50.00	767.08	-0.005	-0.06		767.02	
					766.80		-0.19	-0.016	906+64.50	766.99	0.000	0.00		766.99	FLAT
					766.74		-0.19	-0.016	906+75.00	766.93	0.004	0.04	250:1	766.97	
					766.65		-0.19	-0.016	907+00.00	766.84	0.012	0.14		766.99	
NC					766.62		-0.19	-0.016	907+12.50	766.82	0.016	0.19		767.01	*
					766.56	250:1	-0.24	-0.020	907+25.00	766.80	0.020	0.24		767.04	
□ □					766.52		-0.28	-0.023	907+33.78	766.80	0.023	0.28	□ □	767.08	

□ TRANSITION CONTINUES FROM TRANS 71 NB (CENTER)

□□ IN 2D TRANSITION WILL CONTINUE TO FS IN CURVE

* = SUPERELEVATION BREAKPOINT ROUNDING

CALCULATED

CHECKED

SUPERELEVATION TABLE - RAMP P2
STA 900+26.40 TO STA 907+33.78

FRA-70-14.54

1061
2317

PLOT.CEL
ms consultants, inc.
msconsultants.com
Ohio DOT Workspace
70\71 East Interchange 2E
www.msconsultants.com
Batchplot Spec: \\msconsultants.com\files\production\03\60\06634_2E\standards\plotdrv\batchplt.spc
Pen Table: \\msconsultants.com\files\Standards\ustn\ohdot\V8i\ms\plotting\pen\V8i_ms_std.tbl
Plot Driver: \\msconsultants.com\files\Standards\ustn\ohdot\V8i\ms\plotting\PDF.pltcfg
PCF: ohdotV8i
PCF: 60-06634_2E_Columbus
34" x 22"
Model: Sheet
Printed: 6/19/2018 @ 9:00:04 AM
File: N:\03\60\06634_2E\roadway\sheets\105322GE016.DGN
View: FENCE_VIEW1
By: jdouglas

PLOT.CEL

ms consultants, inc.
msconsultants.com

www.msconsultants.com

Ohio DOT Workspace
70\71 East Interchange 2E

1"
0.5"
0

Batchplot Spec: \\msconsultants.com\Files\Production\Q3\60\06634_2E\standards\plotdrv\batchplt.spc
Pen Table: \\msconsultants.com\Files\Standards\ustn\ohdot\V8\ms\plotting\pen\V8i_ms_std.tbl PDF: ohdotV8i
Plot Driver: \\msconsultants.com\Files\Standards\ustn\ohdot\v8i\ms\plotting\PDF.pltcfg PCF: 60-06634_2E_Columbus

Model: Sheet View: FENCE_VIEW1
Printed: 6/19/2018 @ 9:00:05 AM By: jdouglas
File: N:\03\60\06634_2E\roadway\sheets\005322GE026.dgn

34" x 22"

SUPERELEVATION TABLE

P.I. STA. = 901+34.72	Dc = 1°00'00"

LEFT SIDE					CENTERLINE CONTROL		RIGHT SIDE					REMARKS
EDGE ELEVATION	TRANSITION RATE	ELEVATION CORRECTION	CROSS SLOPE	WIDTH	STATION	PROFILE GRADE	WIDTH	CROSS SLOPE	ELEVATION CORRECTON	TRANSITION RATE	EDGE ELEVATION	
775.69		0.28	0.023	12.00	901+42.49	775.41	24.00	-0.023	-0.55		774.86	FS
775.51		0.28	0.023	12.00	901+50.00	775.23	24.00	-0.023	-0.55		774.68	
774.92		0.28	0.023	12.00	901+75.00	774.64	24.00	-0.023	-0.55		774.09	
774.33		0.28	0.023	12.00	902+00.00	774.05	24.00	-0.023	-0.55		773.50	
773.74		0.28	0.023	12.00	902+25.00	773.46	24.00	-0.023	-0.55		772.91	
773.08		0.28	0.023	12.00	902+50.00	772.80	24.00	-0.023	-0.55		772.25	
772.38		0.28	0.023	12.00	902+75.00	772.11	24.00	-0.023	-0.55		771.56	
771.71		0.28	0.023	12.00	903+00.00	771.43	24.00	-0.023	-0.55		770.88	
771.08		0.28	0.023	12.00	903+25.00	770.80	24.00	-0.023	-0.55		770.25	
770.52		0.27	0.023	12.00	903+50.00	770.22	24.00	-0.023	-0.55		769.74	
770.46		0.28	0.023	12.00	903+53.13	770.17	24.00	-0.023	-0.55	213:1	769.68	FS
770.01		0.23	0.019	12.00	903+75.00	769.78	24.00	-0.019	-0.45		769.34	*
769.76		0.19	0.016	12.00	903+88.36	769.55	24.00	-0.016	-0.39		769.13	PT
769.76		0.19	0.016	12.00	903+88.87	769.55	24.00	-0.016	-0.39		769.13	NC

* = SUPERELEVATION BREAKPOINT ROUNDING

CALCULATED | CHECKED

SUPERELEVATION TABLE - RAMP Q3
STA 901+42.49 TO STA 903+88.87

FRA-70-14.54

1062
2317

PLOT.CEL

ms consultants, inc.
msconsultants.com

www.msconsultants.com
Ohio DOT Workspace
70\71 East Interchange 2E

1" 0.5" 0

Batchplot Spec: \\msconsultants.com\files\production\03\60\06634_2E\standards\plotdrv\batchplt.spc
Pen Table: \\msconsultants.com\files\03\60\06634_2E\standards\ustn\ohdot\V8i\ms\plotting\pen\V8i_ms_std.tbl
Plot Driver: \\msconsultants.com\files\03\60\06634_2E\standards\ustn\ohdot\V8i\ms\plotting\PDF: ohdotV8i
PDF: 60-06634_2E_Columbus

Model: Sheet
Printed: 6/19/2018 @ 9:00:06 AM
File: N:\03\60\06634_2E\roadway\sheets\05322GE029.DGN
View: FENCE_VIEW1
By: jdouglas

34" x 22"

SUPERELEVATION TABLE

P.I. STA. 963+29.46 | Dc = 3° 45′ 00″

LEFT SIDE					CENTERLINE CONTROL		RIGHT SIDE					REMARKS
EDGE ELEVATION	TRANSITION RATE	ELEVATION CORRECTION	CROSS SLOPE	WIDTH	STATION	PROFILE GRADE	WIDTH	CROSS SLOPE	ELEVATION CORRECTON	TRANSITION RATE	EDGE ELEVATION	
739.49		0.17	0.014	12.00	960+99.32	739.32						
739.51	213:1 ↑	0.19	0.016	12.01	961+00.00	739.32						
739.51	213:1 ↓	0.19	0.016	12.01	961+00.09	739.32						NC
739.86		0.21	0.016	12.82	961+82.00	739.62						NC *
739.99		0.29	0.022	13.00	962+00.00	739.70						
740.21		0.40	0.030	13.25	962+25.00	739.81						
740.38	25↑:1	0.50	0.037	13.44	962+44.99	739.88						PC
740.42	25↑:1	0.53	0.039	13.49	962+50.00	739.90						
740.64	25↑:1	0.65	0.047	13.74	962+75.00	739.99						
740.84	25↑:1	0.77	0.055	14.00	963+00.00	740.07						
740.86	25↑:1 ↓	0.79	0.056	14.02	963+02.25	740.07						FS
740.97	25↑:1 ↑	0.79	0.056	14.17	963+16.98	740.19						FS *
741.04	25↑:1	0.77	0.054	14.25	963+25.00	740.28						
741.23	280:1 ↑	0.67	0.046	14.50	963+50.00	740.56						
741.42	280:1 ↑	0.58	0.039	14.75	963+75.00	740.84						
741.60	280:1 ↑	0.48	0.032	15.00	964+00.00	741.12						
741.75	280:1 ↑	0.42	0.028	15.14	964+13.75	741.34						PT

SUPERELEVATION TABLE

P.I. STA. 967+11.05 | Dc = 1° 00′ 00″

LEFT SIDE					CENTERLINE CONTROL		RIGHT SIDE					REMARKS
EDGE ELEVATION	TRANSITION RATE	ELEVATION CORRECTION	CROSS SLOPE	WIDTH	STATION	PROFILE GRADE	WIDTH	CROSS SLOPE	ELEVATION CORRECTON	TRANSITION RATE	EDGE ELEVATION	
741.88		0.37	0.024	15.25	964+25.00	741.52						
742.15		0.26	0.017	15.49	964+50.00	741.89						
742.30		0.16	0.010	15.74	964+75.00	742.15						
742.31		0.03	0.002	15.99	965+00.00	742.28						
742.31	280:1 ↑	0.00	-0.000	16.00	965+07.83	742.31						FLAT
742.29	280:1 ↑	-0.08	-0.005	16.00	965+25.00	742.37						
742.20	280:1 ↑	-0.21	-0.013	16.00	965+50.00	742.41						
742.20	280:1 ↑	-0.21	-0.013	16.00	965+50.45	742.41						PC
742.09	280:1 ↓	-0.32	-0.020	16.00	965+71.83	742.41						
742.10	280:1 ↑	-0.30	-0.019	16.00	965+75.00	742.41						
742.19	280:1 ↑	-0.18	-0.011	16.00	966+00.00	742.37						
742.24	280:1 ↑	-0.05	-0.003	16.00	966+25.00	742.29						
742.26	266:1 ↑	0.06	0.004	16.00	966+50.00	742.20						
742.33	266:1 ↑	0.19	0.012	16.00	966+75.00	742.14						
742.44	266:1 ↓	0.32	0.020	16.00	966+99.83	742.12						

* = SUPERELEVATION BREAKPOINT ROUNDING

CALCULATED JAP | CHECKED JSS

SUPERELEVATION TABLE - WEST END TRANS. RAMP N1
STA 960+99.32 TO STA 966+99.83

FRA-70-14.54

1063
2317

ms consultants, inc.

PLOT.CEL

ms consultants, inc.
msconsultants.com

SUPERELEVATION TABLE (CHIRLDRENS DR.)

P.I. STA. = 590+65.19 | Dc = 47° 44′ 47″

LEFT SIDE					CENTERLINE CONTROL		RIGHT SIDE					REMARKS
EDGE ELEVATION	TRANSITION RATE	ELEVATION CORRECTION	CROSS SLOPE	WIDTH	STATION	PROFILE GRADE	WIDTH	CROSS SLOPE	ELEVATION CORRECTON	TRANSITION RATE	EDGE ELEVATION	
781.74		-0.13	-0.008	17.00	590+00.12	781.87	17.00	0.008	0.14		782.01	
781.27		-0.20	-0.012	17.00	590+25.00	781.47	17.00	0.012	0.20		781.67	
781.22	367:1	-0.20	-0.012	17.00	590+26.59	781.43	17.00	0.012	0.20	367:1	781.64	PC
780.41		-0.28	-0.016	17.47	590+50.00	780.69	17.47	0.016	0.28		780.97	NC
776.94		-0.29	-0.016	18.00	591+51.23	777.22	18.00	0.016	0.29		777.51	NC
776.02	231:1	-0.40	-0.022	18.05	591+75.00	776.41	21.71	0.022	0.48	231:1	776.88	

SUPERELEVATION TABLE (AMBULANCE DR.)

TANGENT

LEFT SIDE					CENTERLINE CONTROL		RIGHT SIDE					REMARKS
EDGE ELEVATION	TRANSITION RATE	ELEVATION CORRECTION	CROSS SLOPE	WIDTH	STATION	PROFILE GRADE	WIDTH	CROSS SLOPE	ELEVATION CORRECTON	TRANSITION RATE	EDGE ELEVATION	
783.76		-0.16	-0.013	12.00	691+05.00	783.91	19.56	0.013	0.25		784.16	
784.02		-0.16	-0.013	12.00	691+25.00	784.17	12.00	0.013	0.16		784.32	
783.60		-0.16	-0.013	12.00	691+50.00	783.75	12.00	0.013	0.16		783.90	
783.08		-0.16	-0.013	12.00	691+62.67	783.23	12.00	0.013	0.16		783.38	
782.53	463:1	-0.18	-0.015	12.00	691+75.00	782.71	12.49	0.015	0.19	521:1	782.89	
781.58		-0.27	-0.020	13.52	692+00.00	781.84	30.45	0.019	0.58		782.43	

CALCULATED JAP
CHECKED TAZ

SUPERELEVATION TABLE
CHILDRENS DRIVE & AMBULANCE DRIVE

FRA-70-14.54

1064
2317

ms consultants, inc.

Model: Sheet
Printed: 6/19/2018 @ 9:00:08 AM
File: N:\03\60\0663 4_2E\roadway\Sheets\105322GE042.dgn
View: FENCE_VIEW1
By: jdouglas

Batchplot Spec: \\msconsultants.com\files\production\03\60\06634_2E\standards\plotdrv\batchplt.spc
Pen Table: \\msconsultants.com\files\Standards\ustn\ohdot\V8i\ms\plotting\pen\V8i_ms_std.tbl
Plot Driver: \\msconsultants.com\files\Standards\ustn\ohdot\V8i\ms\plotting\PDF.pltcfg

Ohio DOT Workspace
70\71 East Interchange 2E
www.msconsultants.com

34" x 22"

PLOT.CEL

ms consultants, inc.
msconsultants.com

www.msconsultants.com

Ohio DOT Workspace
70\71 East Interchange 2E

1" 0.5" 0

PDF: ohdot\V8i
PCF: 60-06634_2E_Columbus

Batchplot Spec: \\msconsultants.com\Files\Production\03\60\06634_2E\standards\plotdir\batchplt.spc
Pen Table: \\msconsultants.com\Files\Standards\ustn\ohdot\V8\ms\plotting\pen\V8i_ms_std.tbl
Plot Driver: \\msconsultants.com\Files\Standards\ustn\ohdot\v8i\ms\plotting\PDF.pltcfg

Model: Sheet
Printed: 6/19/2018 @ 9:00:09 AM
File: N:\03\60\06634_2E\roadway\sheets\105322GE050.DGN

View: FENCE_VIEW1
By: jdouglas

34" x 22"

SUPERELEVATION TABLE

P.I STA. 792+62.84 | Dc = 5° 0′ 00″

LEFT SIDE					CENTERLINE CONTROL		RIGHT SIDE					REMARKS
EDGE ELEVATION	TRANSITION RATE	ELEVATION CORRECTION	CROSS SLOPE	WIDTH	STATION	PROFILE GRADE	WIDTH	CROSS SLOPE	ELEVATION CORRECTON	TRANSITION RATE	EDGE ELEVATION	
					791+77.25	795.58	16.00	-0.043	-0.69	187:1 ↕	794.89	PC
					792+00.00	794.69	16.00	-0.051	-0.81		793.88	
					792+01.25	794.64	16.00	-0.051	-0.82		793.82	FS
					792+25.00	793.75	16.00	-0.051	-0.82		792.93	FS
					792+32.77	793.47	16.00	-0.051	-0.82	↕	792.65	FS
					792+50.00	792.86	16.00	-0.045	-0.72		792.14	
					792+75.00	792.02	16.00	-0.037	-0.59		791.43	
					793+00.00	791.23	16.00	-0.028	-0.45		790.77	
					793+25.00	790.48	16.00	-0.020	-0.32	185:1	790.16	
					793+48.12	789.84	16.00	-0.012	-0.19		789.65	PT
					793+50.00	789.79	16.00	-0.011	-0.18		789.61	
					793+75.00	789.15	16.00	-0.003	-0.05		789.10	
					793+83.85	788.93	16.00	0.000	0.00	↕	788.93	FLAT

SUPERELEVATION TABLE

P.I. STA. 797+44.12 | Dc = 3° 31′ 36″

LEFT SIDE					CENTERLINE CONTROL		RIGHT SIDE					REMARKS
EDGE ELEVATION	TRANSITION RATE	ELEVATION CORRECTION	CROSS SLOPE	WIDTH	STATION	PROFILE GRADE	WIDTH	CROSS SLOPE	ELEVATION CORRECTON	TRANSITION RATE	EDGE ELEVATION	
					793+83.85	788.93	16.00	0.000	0.00	↕	788.93	FLAT
					794+00.00	788.55	16.00	0.005	0.08		788.63	
					794+19.57	788.12	16.00	0.011	0.18		788.30	PC
					794+25.00	788.00	16.00	0.013	0.21		788.21	
					794+50.00	787.51	16.00	0.021	0.33	200:1	787.84	
					794+75.00	787.06	16.00	0.028	0.46		787.52	
					795+00.00	786.66	16.00	0.036	0.58		787.24	
					795+25.00	786.30	16.00	0.044	0.71		787.01	
					795+38.13	786.13	16.00	0.048	0.77	↕	786.90	FS
					795+50.00	785.97	16.00	0.048	0.77		786.74	
					795+75.00	785.73	16.00	0.048	0.77		786.50	
					796+00.00	785.46	16.00	0.048	0.77		786.23	
					796+25.00	785.12	16.00	0.048	0.77		785.89	
					796+50.00	784.74	16.00	0.048	0.77		785.51	
					796+75.00	784.34	16.00	0.048	0.77		785.11	
					797+00.00	783.91	16.00	0.048	0.77		784.68	
					797+24.45	783.48	16.00	0.048	0.77		784.25	
					797+25.00	783.47	17.97	0.048	0.86		784.33	
					797+50.00	782.97	16.51	0.048	0.79		783.76	
					797+75.00	782.47	15.45	0.048	0.74		783.21	
					798+00.00	781.95	14.77	0.048	0.71		782.66	
					798+25.00	781.40	14.27	0.048	0.68		782.08	
					798+50.00	780.84	13.81	0.048	0.66		781.50	
					798+75.00	780.27	13.41	0.048	0.64		780.91	
					799+00.00	779.68	13.05	0.048	0.63		780.31	
					799+07.25	779.51	12.96	0.048	0.62	213:1 ↕	780.13	FS
					799+21.04	779.18	12.79	0.050	0.64		779.82	FS
					799+25.00	779.08	12.75	0.050	0.64		779.72	↕
					799+47.37	778.66	12.52	0.050	0.63		779.29	
					799+50.00	778.61	12.50	0.050	0.62	↕	779.23	FS
					799+75.00	778.23	12.30	0.046	0.57		778.80	
					800+00.00	777.83	12.15	0.043	0.53		778.36	
					800+25.00	777.42	12.05	0.040	0.48		777.90	
					800+50.00	777.00	12.00	0.037	0.44		777.44	
					800+60.22	776.82	12.00	0.036	0.43		777.25	PT
					800+75.00	776.57	12.00	0.034	0.40	218:1	776.97	
					801+00.00	776.14	12.00	0.031	0.37		776.51	
					801+25.00	775.69	12.00	0.027	0.33		776.02	
					801+50.00	775.24	12.00	0.024	0.29		775.53	
					801+75.00	774.79	12.00	0.021	0.25		775.04	
					802+00.00	774.34	12.00	0.018	0.21		774.55	
					802+13.61	774.07	12.00	0.016	0.19	↕	774.26	NC

FOR SUPERELEVATION BREAKPOINT ROUNDING SEE THE SUPERELEVATION DIAGRAM FOLLOWING THE TRANS RAMP P2 (CENTER) SUPERELEVATION TABLES

CALCULATED MAH | CHECKED TAZ

SUPERELEVATION TABLE - CENTRAL TRANS. P2
STA. 791+77.25 TO STA. 802+72.65

FRA-70-14.54

1065
2317

ms consultants, inc.

34" x 22"
Model: Sheet
Printed: 6/19/2018 @ 9:00:10 AM
File: N:\03\60\06634_2E\roadway\sheets\1053222E203.DGN
View: FENCE_VIEW1
By: jdouglas
Batchplot Spec: \\msconsultants.com\files\production\03\60\06634_2E\standards\plotdrv\batchplt.spf
Pen Table: N:\03\60\06634_2E\standards\tables\V8i_ms_std_06634_2D_Plan View.tbl
Plot Driver: \\msconsultants.com\files\Standards\ustn\ohdot\v8i\ms\plotting\PDF.pltcfg
DGF: ohdotV8i
PCF: 60-06634_2E_Columbus
Ohio DOT Workspace
70\71 East Interchange 2E
0 0.5" 1"
ms consultants, inc.
msconsultants.com
PLOT.CEL
www.msconsultants.com

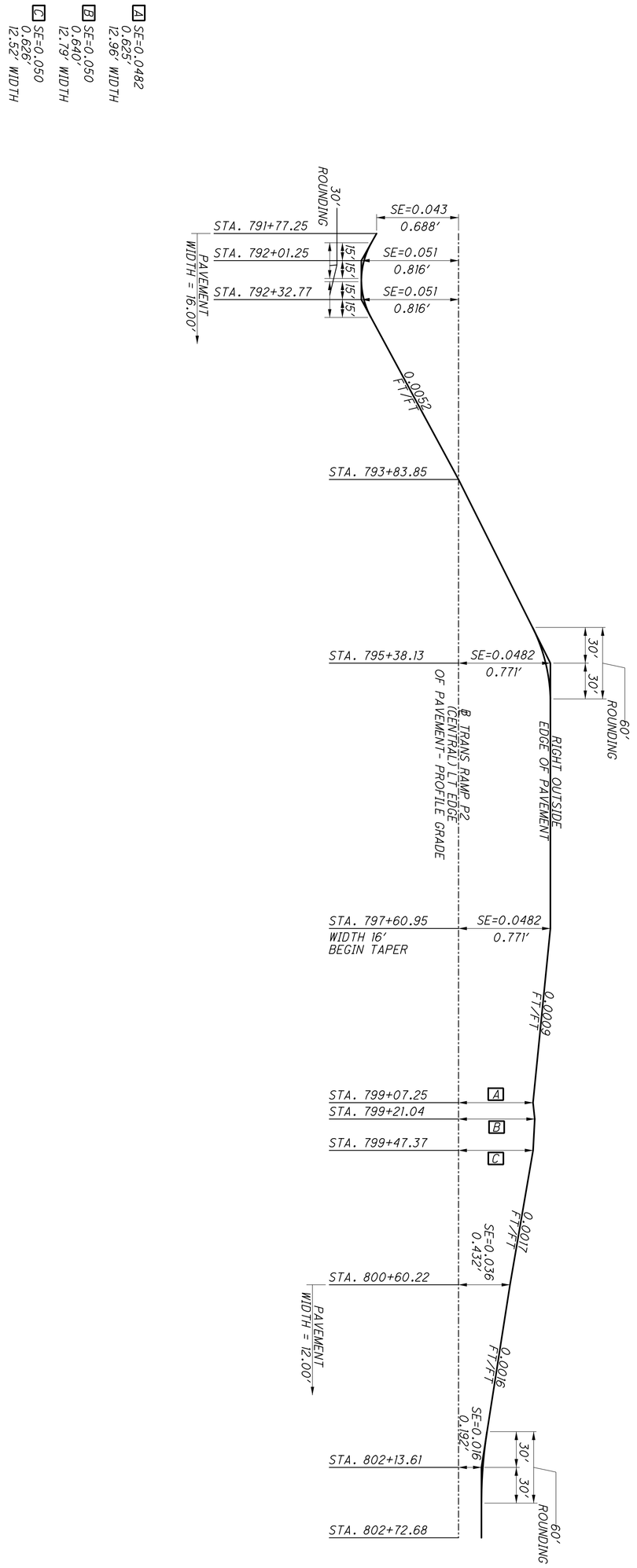

1066 2317	**FRA-70-14.54**	**SUPERELEVATION DIAGRAM TRANS RAMP P2 (CENTRAL)**

CALCULATED MAH
CHECKED TAZ

ms consultants, inc.

SUPERELEVATION TABLE

P.I. STA. 798+00.05 | Dc = 3° 16′ 27″

LEFT SIDE					CENTERLINE CONTROL		RIGHT SIDE					REMARKS
EDGE ELEVATION	TRANSITION RATE	ELEVATION CORRECTION	CROSS SLOPE	WIDTH	STATION	PROFILE GRADE	WIDTH	CROSS SLOPE	ELEVATION CORRECTON	TRANSITION RATE	EDGE ELEVATION	
779.34		-0.53	-0.045	12.00	795+71.12	779.88	12.00	0.045	0.53		780.41	PC
779.36	216:1	-0.55	-0.046	12.00	795+75.00	779.91	12.00	0.046	0.55	216:1	780.46	
779.43		-0.63	-0.052	12.00	795+91.12	780.05	12.00	0.052	0.63		780.68	FS
779.51		-0.63	-0.052	12.00	796+00.00	780.13	12.00	0.052	0.63		780.76	
779.73		-0.63	-0.052	12.00	796+25.00	780.35	12.00	0.052	0.63		780.98	
779.94		-0.63	-0.052	12.00	796+50.00	780.57	12.00	0.052	0.63		781.19	
780.10		-0.63	-0.052	12.00	796+75.00	780.73	12.00	0.052	0.63		781.35	
780.21		-0.63	-0.052	12.00	797+00.00	780.83	12.00	0.052	0.63		781.46	
780.26		-0.63	-0.052	12.00	797+25.00	780.89	12.00	0.052	0.63		781.51	
780.26		-0.63	-0.052	12.00	797+50.00	780.88	12.00	0.052	0.63		781.51	
780.20		-0.63	-0.052	12.00	797+75.00	780.83	12.00	0.052	0.63		781.45	
780.09		-0.63	-0.052	12.00	798+00.00	780.71	12.00	0.052	0.63		781.34	
779.92		-0.63	-0.052	12.00	798+25.00	780.55	12.00	0.052	0.63		781.17	
779.70		-0.63	-0.052	12.00	798+50.00	780.33	12.00	0.052	0.63		780.95	
779.42		-0.63	-0.052	12.00	798+75.00	780.05	12.00	0.052	0.63		780.68	
779.12		-0.63	-0.052	12.00	798+97.99	779.75	12.00	0.052	0.63		780.37	FS
779.10		-0.62	-0.051	12.00	799+00.00	779.72	12.00	0.051	0.62		780.33	
778.84		-0.49	-0.041	12.00	799+25.00	779.33	12.00	0.041	0.49		779.82	
778.53	200:1	-0.37	-0.031	12.00	799+50.00	778.89	12.00	0.031	0.37		779.26	
778.16		-0.24	-0.020	12.00	799+75.00	778.40	12.00	0.020	0.24		778.64	
778.01		-0.19	-0.016	12.00	799+84.87	778.20	12.00	0.016	0.19	200:1	778.40	
777.71		-0.19	-0.016	12.00	800+00.00	777.90	12.00	0.010	0.12		778.02	
777.24		-0.19	-0.016	12.00	800+23.27	777.44	12.00	0.000	0.00		777.44	HALF FLAT
777.21		-0.19	-0.016	12.00	800+25.00	777.40	12.00	-0.001	-0.01	□	777.39	
777.18		-0.19	-0.016	12.00	800+26.39	777.37	12.00	-0.001	-0.02		777.35	NC/PT

SUPERELEVATION TABLE

LEFT SIDE					CENTERLINE CONTROL		RIGHT SIDE					REMARKS
EDGE ELEVATION	TRANSITION RATE	ELEVATION CORRECTION	CROSS SLOPE	WIDTH	STATION	PROFILE GRADE	WIDTH	CROSS SLOPE	ELEVATION CORRECTON	TRANSITION RATE	EDGE ELEVATION	

CALCULATED | CHECKED

SUPERELEVATION TABLE TRANS. I-71 NB
STA. 795+71.12 TO STA. 800+26.39

FRA-70-14.54

1067
2317

FOR SUPERELEVATION BREAKPOINT ROUNDING SEE THE SUPERELEVATION DIAGRAM FOLLOWING THE TRANS I-70 WB (WEST SIDE) SUPERELEVATION TABLES

ms consultants, inc.

ms consultants, inc.
msconsultants.com
www.msconsultants.com

Ohio DOT Workspace
70\71 East Interchange 2E

PLOT.CEL
1" 0.5" 0
Batchplot Spec: \\vmsconsultants.com\files\production\03\60\06634_2E\standards\plotdrv\batchplt.spc PCF: ohdot1V8i
Pen Table: \\vmsconsultants.com\files\Standards\astm\ohdot\V8i\ms\plotting\pen\V8i_ms_std.tbl PCF: 60-06634_2E_Columbus
Plot Driver: \\vmsconsultants.com\files\Standards\astm\ohdot\V8i\ms\plotting\PDF.pltcfg
Model: Sheet View: FENCE_VIEW1
Printed: 6/19/2018 @ 9:00:12 AM By: jdouglas
File: N:\03\60\06634_2E\roadway\sheets\105226E051DGN
34" x 22"

34" x 22"
Model: Sheet
Printed: 6/19/2018 @ 9:00:13 AM
File: N:\03\60\06634_2E\roadway\sheets\1053222GE205.DGN
View: FENCE_VIEW1
By: jdouglas
Batchplot Spec: \\msconsultants.com\files\production\03\60\06634_2E\standards\plotdrv\batchplt.spc
Pen Table: N:\03\60\06634_2E\standards\tables\V8i_ms_std_06634_2D_Plan View.tbl
Plot Driver: \\msconsultants.com\files\Standards\ustn\ohdot\v8i\ms\plotting\PDF.pltcfg
0 1" 0.5"
DGF: ohdotV8i
PCF: 60-06634_2E_Columbus
Ohio DOT Workspace
70\71 East Interchange 2E
ms consultants, inc.
msconsultants.com
PLOT.CEL
www.msconsultants.com

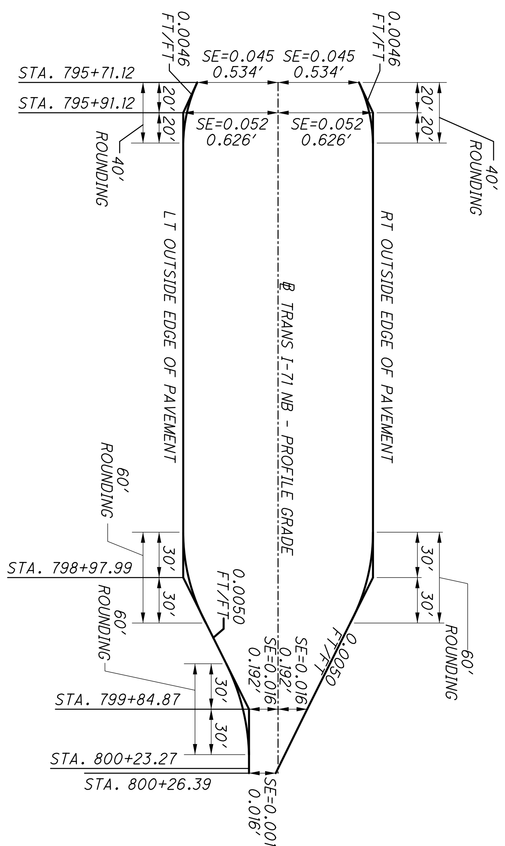

1068 2317	**FRA-70-14.54**	**SUPERELEVATION DIAGRAM TRANS I-71 NB**

CALCULATED MAH
CHECKED TAZ

ms consultants, inc.

PLOT.CEL

ms consultants, inc.
msconsultants.com

www.msconsultants.com
70\71 East Interchange 2E
Ohio DOT Workspace

1" 0.5" 0

PDF: ohdot1V8i
PLOTCF: 60-06634_2E_Columbus

Batchplot Spec: \\msconsultants.com\files\production\03\60\06634_2E\standards\plotdr\batchplt.spc
Pen Table: \\msconsultants.com\files\Standards\usitn\ohdot\V8i\ms\plotting\pen\V8i_ms_std.tbl
Plot Driver: \\msconsultants.com\files\Standards\usitn\ohdot\v8i\ms\plotting\PDF.pltcfg

Model: Sheet
Printed: 6/19/2018 @ 9:00:14 AM
File: N:\03\60\06634_2E\roadway\sheets\105226E052.DGN
View: FENCE_VIEW1
By: jdouglas

34" x 22"

SUPERELEVATION TABLE

P.I. STA. 60+81.18 | Dc = 0° 45′ 00″

LEFT SIDE					CENTERLINE CONTROL		RIGHT SIDE					REMARKS
EDGE ELEVATION	TRANSITION RATE	ELEVATION CORRECTION	CROSS SLOPE	WIDTH	STATION	PROFILE GRADE	WIDTH	CROSS SLOPE	ELEVATION CORRECTON	TRANSITION RATE	EDGE ELEVATION	
766.52	247:1	-0.28	-0.023	12.00	57+33.78	766.80	12.00	0.023	0.28	247:1	767.08	□
766.67		-0.21	-0.018	12.00	57+50.00	766.88	12.00	0.018	0.21		767.09	
766.73		-0.19	-0.016	12.00	57+54.85	766.92	12.00	0.016	0.19		767.11	NC
766.90		-0.19	-0.016	12.00	57+75.00	767.10	12.00	0.016	0.19		767.29	NC
767.06	166:1	-0.19	-0.016	12.00	57+90.44	767.25	12.00	0.016	0.19	166:1	767.44	NC/PC
767.09		-0.22	-0.018	12.00	57+96.42	767.31	12.00	0.018	0.22		767.52	FS
767.13		-0.22	-0.018	12.00	58+00.00	767.34	12.00	0.018	0.22		767.56	
767.39		-0.22	-0.018	12.00	58+25.00	767.60	12.00	0.018	0.22		767.82	
767.60		-0.22	-0.018	12.00	58+50.00	767.81	12.00	0.018	0.22		768.03	
767.81		-0.22	-0.018	12.00	58+75.00	768.02	12.00	0.018	0.22		768.24	
768.02		-0.22	-0.018	12.00	59+00.00	768.23	12.00	0.018	0.22		768.45	
768.18		-0.22	-0.018	12.00	59+25.00	768.39	12.00	0.018	0.22		768.61	
768.36		-0.22	-0.018	12.00	59+50.00	768.57	12.00	0.018	0.22		768.79	
768.58		-0.22	-0.018	12.00	59+75.00	768.80	12.00	0.018	0.22		769.01	
768.80		-0.22	-0.018	12.00	60+00.00	769.02	12.00	0.018	0.22		769.23	
769.02		-0.22	-0.018	12.00	60+25.00	769.24	12.00	0.018	0.22		769.45	
769.24		-0.22	-0.018	12.00	60+50.00	769.46	12.00	0.018	0.22		769.67	
769.44		-0.22	-0.018	12.00	60+75.00	769.66	12.00	0.018	0.22		769.87	
769.60		-0.22	-0.018	12.00	61+00.00	769.81	12.00	0.018	0.22		770.03	
769.76		-0.22	-0.018	12.00	61+25.00	769.97	12.00	0.018	0.22		770.19	
769.91		-0.22	-0.018	12.00	61+50.00	770.13	12.00	0.018	0.22		770.34	
770.07		-0.22	-0.018	12.00	61+75.00	770.28	12.00	0.018	0.22		770.50	
770.22		-0.22	-0.018	12.00	62+00.00	770.44	12.00	0.018	0.22		770.65	
770.38		-0.22	-0.018	12.00	62+25.00	770.59	12.00	0.018	0.22		770.81	
770.53		-0.22	-0.018	12.00	62+50.00	770.75	12.00	0.018	0.22		770.96	
770.69		-0.22	-0.018	12.00	62+75.00	770.90	12.00	0.018	0.22		771.12	
770.83		-0.22	-0.018	12.00	63+00.00	771.04	12.00	0.018	0.22		771.26	
770.96		-0.22	-0.018	12.00	63+25.00	771.17	12.00	0.018	0.22		771.39	
771.07		-0.22	-0.018	12.00	63+50.00	771.28	12.00	0.018	0.22		771.50	
771.11	417:1	-0.22	-0.018	12.00	63+61.63	771.33	12.00	0.018	0.22	417:1	771.54	FS
771.20		-0.19	-0.016	12.00	63+71.63	771.39	12.00	0.016	0.19		771.58	NC/PT

SUPERELEVATION TABLE

LEFT SIDE					CENTERLINE CONTROL		RIGHT SIDE					REMARKS
EDGE ELEVATION	TRANSITION RATE	ELEVATION CORRECTION	CROSS SLOPE	WIDTH	STATION	PROFILE GRADE	WIDTH	CROSS SLOPE	ELEVATION CORRECTON	TRANSITION RATE	EDGE ELEVATION	

□ *TRANSITION CONTINUES FROM RAMP P2*

FOR SUPERELEVATION BREAKPOINT ROUNDING SEE THE SUPERELEVATION DIAGRAM FOLLOWING THE TRANS I-70 WB (WEST SIDE) SUPERELEVATION TABLES

CALCULATED MAH | CHECKED TAZ

SUPERELEVATION TABLE TRANS EASTSIDE P2
STA. 57+33.78 TO STA. 63+71.63

FRA-70-14.54

1069
2317

34" x 22"
0 1" 0.5"
PLOT.CEL
ms consultants, inc.
msconsultants.com
Model: Sheet View: FENCE_VIEW1
Printed: 6/19/2018 @ 9:00:16 AM By: jdouglas
File: N:\03\60\06634_2E\roadway\sheets\1053222GE208.DGN
Batchplot Spec: \\msconsultants.com\files\production\03\60\06634_2E\standards\plotdrv\batchplt.spc
Pen Table: N:\03\60\06634_2E\standards\tables\V8i_ms_std_06634_2D_Plan View.tbl
Plot Driver: \\msconsultants.com\files\Standards\ustn\ohdot\v8i\ms\plotting\PDF.pltcfg
DGF: ohdotV8i
PCF: 60-06634_2E_Columbus
Ohio DOT Workspace
70\71 East Interchange 2E
www.msconsultants.com

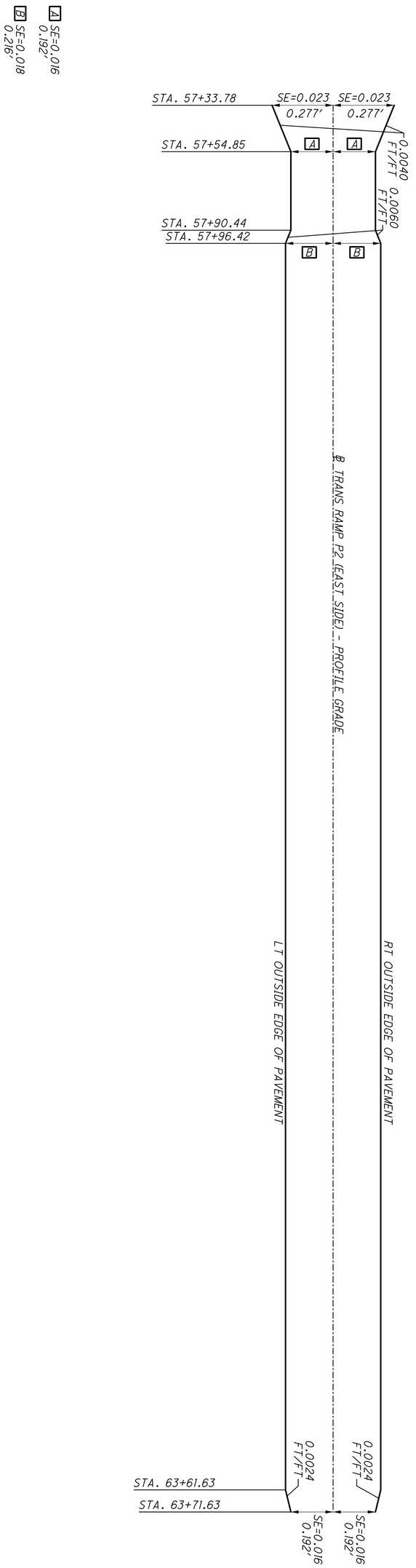

ms consultants, inc.

1070 / 2317	FRA-70-14.54	SUPERELEVATION DIAGRAM TRANS RAMP P2 (EAST SIDE)
		CALCULATED MAH CHECKED TAZ

PLOT.CEL
ms consultants, inc.
msconsultants.com
www.msconsultants.com
Ohio DOT Workspace
70\71 East Interchange 2E
1" 0.5" 0
Batchplot Spec: \\msconsultants.com\files\production\03\60\06634_2E\standards\plotdrv\batchplt.spc
Pen Table: \\msconsultants.com\files\Standards\astm\ohdot\V8i\ms\plotting\pen\V8i_ms_std.tbl
Plot Driver: \\msconsultants.com\files\Standards\astm\ohdot\v8i\ms\plotting\PDF.pltcfg
PDF: ohdotV8i
PCF: 60-06634_2E_Columbus
34" x 22"
Model: Sheet
Printed: 6/19/2018 @ 9:00:17 AM
File: N:\03\60\06634_2E\roadway\sheets\05322GE03.DGN
View: FENCE_VIEW1
By: jdouglas

SUPERELEVATION TABLE

P.I. STA. 218+77.22 | Dc = 3° 30′ 00″

LEFT SIDE					CENTERLINE CONTROL		RIGHT SIDE					
EDGE ELEVATION	TRANSITION RATE	ELEVATION CORRECTION	CROSS SLOPE	WIDTH	STATION	PROFILE GRADE	WIDTH	CROSS SLOPE	ELEVATION CORRECTON	TRANSITION RATE	EDGE ELEVATION	REMARKS
792.67		1.39	0.058	24.00	217+58.34	791.28						PC/FS
792.50		1.39	0.058	24.00	217+75.00	791.10						
792.23		1.39	0.058	24.00	218+00.00	790.84						
791.96		1.39	0.058	24.00	218+25.00	790.57						
791.70		1.39	0.058	24.00	218+50.00	790.31						
791.43		1.39	0.058	24.00	218+75.00	790.04						
791.17		1.39	0.058	24.00	219+00.00	789.78						
791.10		1.39	0.058	24.00	219+06.67	789.70						FS
790.81		1.31	0.054	24.00	219+25.00	789.51						
790.41		1.19	0.050	24.00	219+50.00	789.23						
790.01		1.07	0.045	24.00	219+75.00	788.94						
789.67		0.97	0.041	24.00	219+95.68	788.69						PT
789.59		0.95	0.040	24.00	220+00.00	788.64						
789.17		0.84	0.035	24.00	220+25.00	788.33						
788.73		0.72	0.030	24.00	220+50.00	788.01						
788.29	223:1	0.60	0.025	24.00	220+75.00	787.69						
787.84		0.48	0.020	24.00	221+00.00	787.35						
787.44		0.38	0.016	24.00	221+21.50	787.06						NC
787.39		0.38	0.016	24.00	221+25.00	787.01						NC
787.07		0.38	0.016	24.00	221+47.67	786.69						NC
787.03		0.37	0.016	24.00	221+50.00	786.65						
786.54		0.26	0.011	24.00	221+75.00	786.29						
786.05		0.14	0.006	24.00	222+00.00	785.92						
785.55		0.02	0.001	24.00	222+25.00	785.53						
785.46		-0.00	-0.000	24.00	222+29.47	785.46						FLAT

SUPERELEVATION TABLE

P.I. STA. 224.92.29 | Dc - 3° 00′ 00″

LEFT SIDE					CENTERLINE CONTROL		RIGHT SIDE					
EDGE ELEVATION	TRANSITION RATE	ELEVATION CORRECTION	CROSS SLOPE	WIDTH	STATION	PROFILE GRADE	WIDTH	CROSS SLOPE	ELEVATION CORRECTON	TRANSITION RATE	EDGE ELEVATION	REMARKS
785.46		0.00	0.000	24.00	222+29.47	785.46						
785.04		-0.10	-0.004	24.00	222+50.00	785.14						
784.53		-0.21	-0.009	24.00	222+75.00	784.74						
784.00		-0.33	-0.014	24.00	223+00.00	784.33						
783.46		-0.45	-0.019	24.00	223+25.00	783.91						
782.91	223:1	-0.57	-0.024	24.00	223+50.00	783.48						
782.75		-0.60	-0.025	24.00	223+57.27	783.35						PC
782.36		-0.68	-0.028	24.00	223+75.00	783.04						
781.79		-0.80	-0.033	24.00	224+00.00	782.59						
781.22		-0.92	-0.038	24.00	224+25.00	782.13						
780.63		-1.04	-0.043	24.00	224+50.00	781.67						
780.04		-1.15	-0.048	24.00	224+75.00	781.19						
779.80		-1.20	-0.050	24.00	224+85.10	781.00						FS
779.51		-1.20	-0.050	24.00	225+00.00	780.71						FS
779.27		-1.20	-0.050	24.00	225+11.83	780.47						FS
779.05		-1.16	-0.048	24.00	225+25.00	780.21						
778.63		-1.08	-0.045	24.00	225+50.00	779.71						
778.18		-1.01	-0.042	24.00	225+75.00	779.19						
777.74		-0.93	-0.039	24.00	226+00.00	778.67						
777.28	329:1	-0.86	-0.036	24.00	226+25.00	778.14						
777.25		-0.85	-0.035	24.00	226+26.86	778.10						PT
776.82		-0.78	-0.032	24.00	226+50.00	777.60						
776.34		-0.70	-0.029	24.00	226+75.00	777.04						
775.85		-0.63	-0.026	24.00	227+00.00	776.48						
775.37		-0.55	-0.023	24.00	227+25.00	775.92						
774.87		-0.48	-0.020	24.00	227+50.00	775.35						
774.39		-0.40	-0.017	24.00	227+75.00	774.79						
774.29		-0.38	-0.016	24.00	227+80.25	774.67						NC

SUPERELEVATION TABLE

P.I. STA. 234+82.91 | Dc - 0°30′00″

767.09		-0.38	-0.016	24.00	233+15.86	767.48						PCC/NC
767.17		-0.36	-0.015	24.00	233+25.00	767.53						
767.38		-0.30	-0.013	24.00	233+50.00	767.69						
767.59		-0.25	-0.010	24.00	233+75.00	767.84						
767.80		-0.19	-0.008	24.00	234+00.00	767.99						
768.01		-0.13	-0.005	24.00	234+25.00	768.14						
768.22		-0.07	-0.003	24.00	234+50.00	768.29						
768.43	429:1	-0.01	-0.001	24.00	234+75.00	768.44						
768.48		0.00	0.000	24.00	234+80.50	768.48						FLAT
768.64		0.05	0.002	24.00	235+00.00	768.60						
768.85		0.10	0.004	24.00	235+25.00	768.75						
769.06		0.16	0.007	24.00	235+50.00	768.90						
769.27		0.22	0.009	24.00	235+75.00	769.05						
769.48		0.28	0.012	24.00	236+00.00	769.20						
769.69		0.34	0.014	24.00	236+25.00	769.36						
769.86		0.38	0.016	24.00	236+45.13	769.48						NC

FOR SUPERELEVATION BREAKPOINT ROUNDING SEE THE SUPERELEVATION DIAGRAM FOLLOWING THE TRANS I-70 WB (EAST SIDE) SUPERELEVATION TABLES

CALCULATED | CHECKED

SUPERELEVATION TABLE TRANS I70 WB (EAST SIDE)
STA. 217+58.34 TO STA. 236+45.13

FRA-70-14.54

1071
2317

ms consultants, inc.

34" x 22"
Model: Sheet View: FENCE_VIEW1
Printed: 6/19/2018 @ 9:00:18 AM By: jdouglas
File: N:\03\60\06634_2E\roadway\sheets\1053222GE207.DGN
Batchplot Spec: \\msconsultants.com\files\production\03\60\06634_2E\standards\plotdrv\batchplt.spc
Pen Table: N:\03\60\06634_2E\standards\tables\V8i_ms_std_06634_2D_Plan View.tbl
Plot Driver: \\msconsultants.com\files\Standards\ustn\ohdot\v8i\ms\plotting\PDF.pltcfg
DGF: ohdotV8i
PCF: 60-06634_2E_Columbus
Ohio DOT Workspace
70\71 East Interchange 2E
0 0.5" 1"
ms consultants, inc.
msconsultants.com
PLOT.CEL
www.msconsultants.com

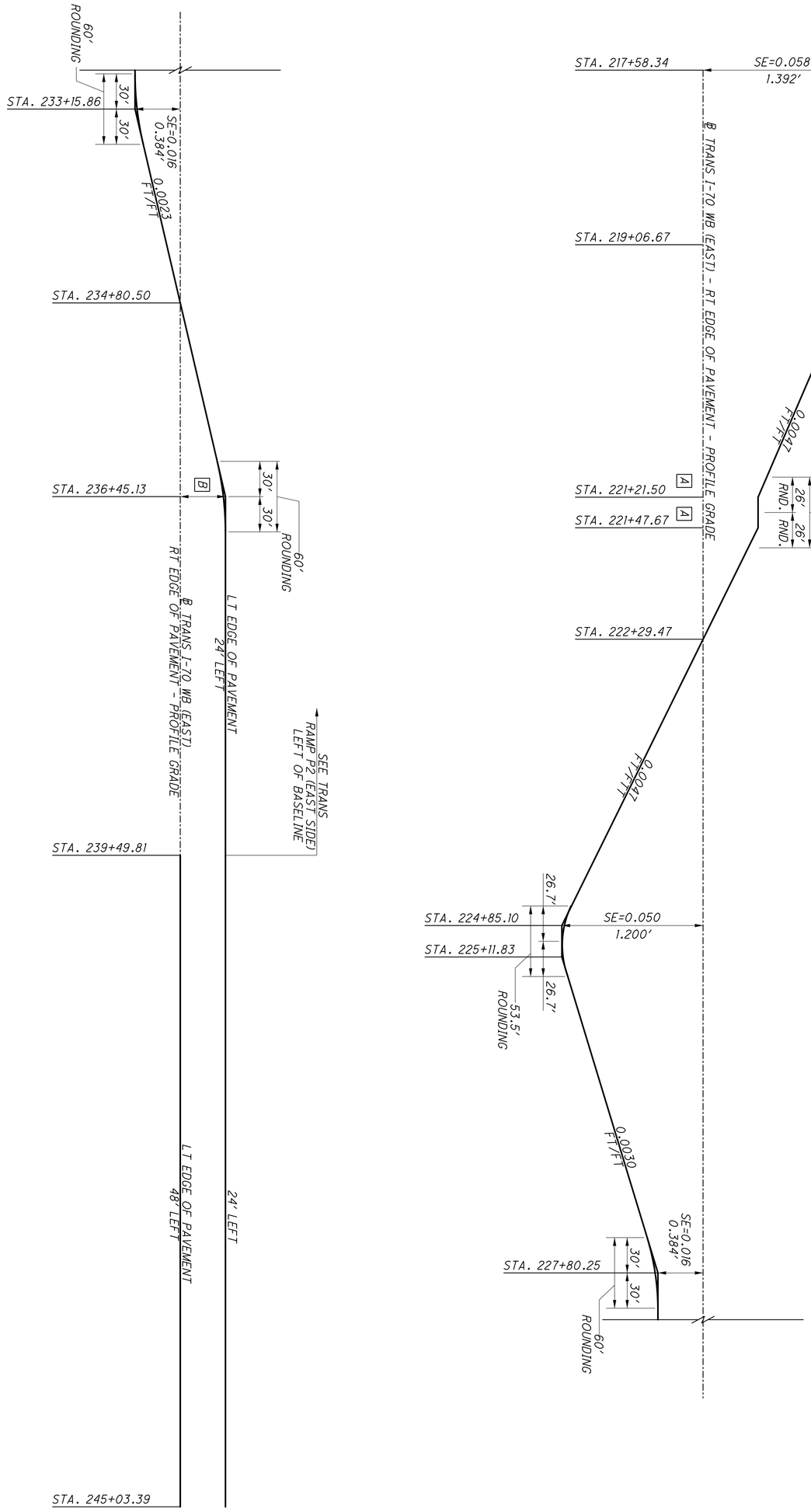

1072 2317	**FRA-70-14.54**	**SUPERELEVATION DIAGRAM TRANS I-70 WB (EAST SIDE)**

CALCULATED MAH
CHECKED TAZ

ms consultants, inc.

PLOT.CEL

ms consultants, inc.
msconsultants.com

www.msconsultants.com

Ohio DOT Workspace
70\71 East Interchange 2E

1"
0.5"
0

PDF: ohdot\V8i
PCF: 60-06634_2E_Columbus

Batchplot Spec: \\msconsultants.com\files\production\03\60\06634_2E\standards\plotdr\batchplt.spc
Pen Table: \\msconsultants.com\files\Standards\usth\ohdot\V8i\ms\plotting\pen\V8i_ms_std.tbl
Plot Driver: \\msconsultants.com\files\Standards\usth\ohdot\v8i\ms\plotting\PDF.pltcfg

Model: Sheet
Printed: 6/19/2018 @ 9:00:19 AM View: FENCE_VIEW1
File: N:\03\60\06634_2E\roadway\sheets\105322GE05.DGN By: jdouglas

34" x 22"

SUPERELEVATION TABLE

P.I. STA. 208+58.87 | Dc = 0°30'00"

INSIDE EDGE (PROFILE GRADE)		RIGHT SIDE, 12'				RIGHT SIDE, 24'				RIGHT SIDE, 36'				REMARKS
STATION	ELEVATION	CROSS SLOPE	ELEVATION CORRECTON	TRANSITION RATE	EDGE ELEVATION	CROSS SLOPE	ELEVATION CORRECTON	TRANSITION RATE	EDGE ELEVATION	CROSS SLOPE	ELEVATION CORRECTON	TRANSITION RATE	EDGE ELEVATION	
207+35.02	766.99	0.016	0.19		767.18	0.016	0.19		767.37	-0.016	-0.19		767.18	NC/PC
207+50.00	767.06	0.016	0.19		767.26	0.014	0.17		767.43	-0.016	-0.19		767.23	
207+75.00	767.23	0.016	0.19		767.42	0.011	0.13		767.55	-0.016	-0.19		767.36	
208+00.00	767.44	0.016	0.19		767.63	0.008	0.09		767.72	-0.016	-0.19		767.53	
208+25.00	767.67	0.016	0.19		767.86	0.005	0.06		767.92	-0.016	-0.19		767.73	
208+50.00	767.90	0.016	0.19		768.09	0.002	0.02	222:1	768.11	-0.016	-0.19		767.92	
208+63.02	768.02	0.016	0.19		768.21	0.000	0.00		768.21	-0.016	-0.19		768.02	FLAT
208+75.00	768.14	0.016	0.19		768.33	-0.001	-0.02		768.31	-0.016	-0.19		768.12	
209+00.00	768.37	0.016	0.19		768.56	-0.005	-0.06		768.51	-0.016	-0.19		768.31	
209+25.00	768.60	0.016	0.19		768.79	-0.008	-0.09		768.70	-0.016	-0.19		768.51	
209+50.00	768.83	0.016	0.19		769.03	-0.011	-0.13		768.90	-0.016	-0.19		768.70	
209+75.00	769.07	0.016	0.19		769.26	-0.014	-0.17		769.09	-0.016	-0.19		768.90	
209+82.72	769.14	0.016	0.19		769.33	-0.015	-0.18		769.15	-0.016	-0.19		768.96	PCC
209+91.03	769.22	0.016	0.19		769.41	-0.016	-0.19		769.22	-0.016	-0.19		769.03	NC

SUPERELEVATION TABLE

P.I. STA. 212+00.24 | Dc = 0°30'00"

211+61.71	770.72	0.016	0.19		770.91	-0.016	-0.19		770.72	-0.016	-0.19		770.53	NC
211+75.00	770.81	0.014	0.17		770.98	-0.016	-0.19		770.79	-0.016	-0.19		770.60	
212+00.00	770.98	0.011	0.13		771.11	-0.016	-0.19		770.92	-0.017	-0.20		770.72	
212+25.00	771.13	0.008	0.10		771.22	-0.016	-0.19		771.03	-0.017	-0.20		770.83	
212+50.00	771.26	0.005	0.06		771.32	-0.016	-0.19		771.13	-0.017	-0.21		770.92	
212+75.00	771.38	0.002	0.02	222:1	771.40	-0.016	-0.19		771.21	-0.018	-0.21	177.8:1	771.00	
212+89.71	771.44	0.000	0.00		771.44	-0.016	-0.19		771.25	-0.018	-0.22		771.03	FLAT
213+00.00	771.48	-0.001	-0.02		771.47	-0.016	-0.19		771.28	-0.018	-0.22		771.06	
213+25.00	771.57	-0.004	-0.05		771.52	-0.016	-0.19		771.33	-0.019	-0.22		771.11	
213+50.00	771.65	-0.008	-0.09		771.56	-0.016	-0.19		771.36	-0.019	-0.23		771.14	
213+75.00	771.70	-0.011	-0.13		771.58	-0.016	-0.19		771.38	-0.019	-0.23		771.15	
214+00.00	771.75	-0.014	-0.17		771.58	-0.016	-0.19		771.39	-0.020	-0.24		771.15	
214+17.71	771.77	-0.016	-0.19		771.58	-0.016	-0.19		771.39	-0.020	-0.24		771.15	NC/PT

FOR SUPERELEVATION BREAKPOINT ROUNDING SEE THE SUPERELEVATION DIAGRAM FOLLOWING THE TRANS I-70 EB (EAST SIDE) SUPERELEVATION TABLES

CALCULATED JAP | CHECKED JSS

SUPERELEVATION TABLE - EAST END TRANS. I-70 EB
STA 207+35.02TO STA 214+17.71

FRA-70-14.54

1073
2317

PLOT.CEL

ms consultants, inc.
msconsultants.com

www.msconsultants.com

Ohio DOT Workspace
70\71 East Interchange 2E

1"
0.5"
0

ODF: ohdot\V8i
PCF: 60-06634_2E_Columbus

Batchplot Spec: \\msconsultants.com\files\production\03\60\06634_2E\standards\plotdr\batchplt.spc
Pen Table: N:\03\60\06634_2E\standards\tables\V8i_ms_std_06634_2D_Plan View.tbl
Plot Driver: \\msconsultants.com\files\Standards\usetn\ohdot\v8i\ms\plotting\PDF.pltclg

Model: Sheet
Printed: 6/19/2018 @ 9:00:21 AM
File: N:\03\60\06634_2E\roadway\sheets\05322GE202.DGN

View: FENCE_VIEW1
By: jdouglas

34" x 22"

RIGHT OF BASELINE

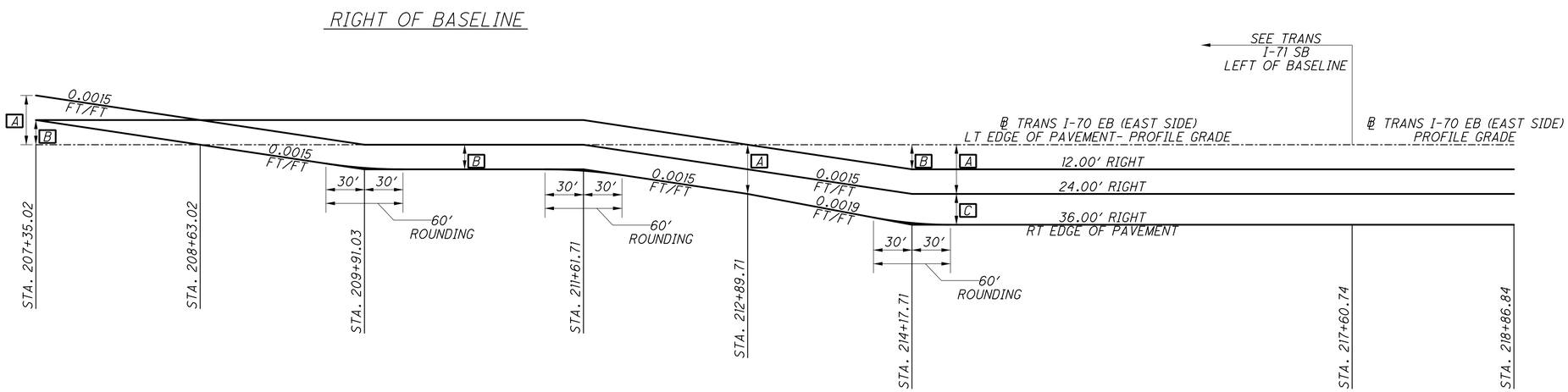

A SE=0.016
0.384′

B SE=0.016
0.192′

C SE=0.020
0.240′

LEFT OF BASELINE

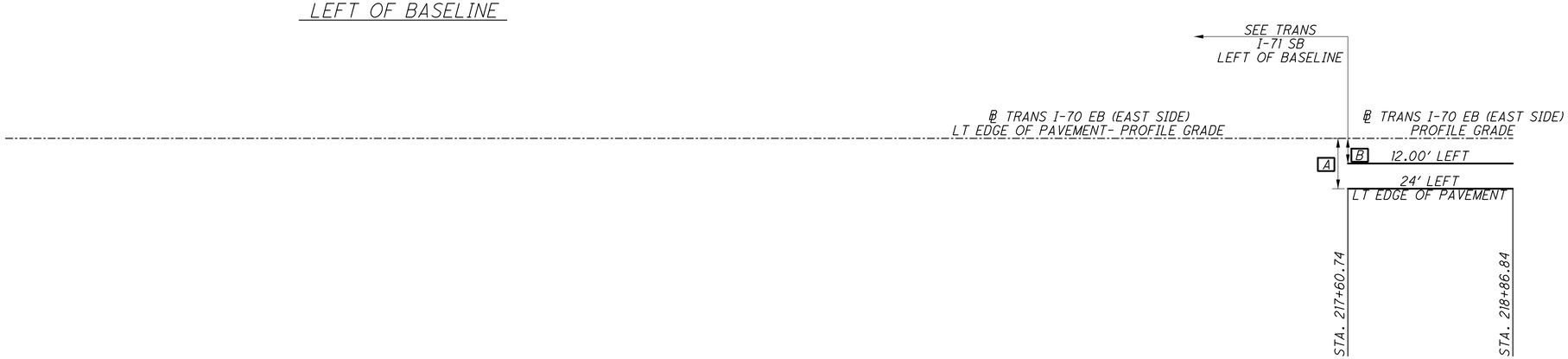

CALCULATED | CHECKED

SUPERELEVATION DIAGRAM
TRANS I-70 EB (EAST SIDE)

FRA-70-14.54

1074
2317

PLOT.CEL

ms consultants, inc.
msconsultants.com

SUPERELEVATION TABLE

P.I. STA. = 216+89.94 | Dc = 5°30'00"

LEFT SIDE					CENTERLINE CONTROL		RIGHT SIDE					REMARKS
EDGE ELEVATION	TRANSITION RATE	ELEVATION CORRECTION	CROSS SLOPE	WIDTH	STATION	PROFILE GRADE	WIDTH	CROSS SLOPE	ELEVATION CORRECTON	TRANSITION RATE	EDGE ELEVATION	
762.20		-0.93	-0.078	12.00	214+56.80	763.13	12.00	0.078	0.93		764.06	PC
762.85	214:1	-0.85	-0.070	12.00	214+75.00	763.70	12.00	0.070	0.85	214:1	764.55	
763.75		-0.73	-0.061	12.00	215+00.00	764.48	12.00	0.061	0.73		765.21	
763.82		-0.72	-0.060	12.00	215+01.80	764.54	12.00	0.060	0.72		765.26	FS
764.21		-0.72	-0.060	12.00	215+14.43	764.93	12.00	0.060	0.72		765.65	
764.53		-0.73	-0.060	12.19	215+25.00	765.26	12.00	0.060	0.72		765.98	
765.28		-0.76	-0.060	12.63	215+50.00	766.04	12.00	0.060	0.72		766.76	
766.04		-0.78	-0.060	13.08	215+75.00	766.82	12.00	0.060	0.72		767.54	
766.79		-0.81	-0.060	13.53	216+00.00	767.60	12.00	0.060	0.72		768.32	
767.54		-0.84	-0.060	13.97	216+25.00	768.38	12.00	0.060	0.72		769.10	
768.29		-0.87	-0.060	14.42	216+50.00	769.16	12.00	0.060	0.72		769.88	
768.88		-0.89	-0.060	14.77	216+69.63	769.77	12.00	0.060	0.72		770.49	
769.05		-0.89	-0.060	14.77	216+75.00	769.94	12.00	0.060	0.72		770.66	
769.83		-0.89	-0.060	14.77	217+00.00	770.72	12.00	0.060	0.72		771.44	
770.61		-0.89	-0.060	14.77	217+25.00	771.50	12.00	0.060	0.72		772.22	
771.39		-0.89	-0.060	14.77	217+50.00	772.28	12.00	0.060	0.72		773.00	
772.17		-0.89	-0.060	14.77	217+75.00	773.06	12.00	0.060	0.72		773.78	
772.95		-0.89	-0.060	14.77	218+00.00	773.84	12.00	0.060	0.72		774.56	
773.73		-0.89	-0.060	14.77	218+25.00	774.62	12.00	0.060	0.72		775.34	
774.51		-0.89	-0.060	14.77	218+50.00	775.40	12.00	0.060	0.72		776.12	
775.29		-0.89	-0.060	14.77	218+75.00	776.18	12.00	0.060	0.72		776.90	
776.03		-0.89	-0.060	14.77	219+00.00	776.92	12.00	0.060	0.72		777.64	
776.47		-0.89	-0.060	14.77	219+15.52	777.36	12.00	0.060	0.72		778.08	FS/CS
776.78		-0.83	-0.056	14.70	219+25.00	777.61	12.00	0.056	0.68		778.29	
777.58		-0.67	-0.047	14.34	219+50.00	778.25	12.00	0.047	0.56		778.81	
778.32		-0.51	-0.037	13.81	219+75.00	778.83	12.00	0.037	0.44		779.27	
778.99		-0.36	-0.027	13.21	220+00.00	779.35	12.00	0.027	0.32		779.67	
779.61		-0.22	-0.017	12.64	220+25.00	779.83	12.00	0.017	0.21		780.04	
779.69	214:1	-0.20	-0.016	12.57	220+28.45	779.89	12.00	0.016	0.19	214:1	780.08	
780.16		-0.09	-0.008	12.20	220+50.00	780.25	12.00	0.008	0.09		780.34	
780.54		0.00	0.000	12.00	220+69.52	780.54	12.00	0.000	0.00		780.54	FLAT/ST
780.64		0.03	0.002	11.90	220+75.00	780.61	11.90	-0.002	-0.03		780.58	
781.06		0.14	0.012	11.45	221+00.00	780.92	11.45	-0.012	-0.14		780.78	
781.22		0.18	0.016	11.25	221+10.52	781.04	11.25	-0.016	-0.18		780.86	NC
781.36		0.18	0.016	11.00	221+24.52	781.18	11.00	-0.016	-0.18		781.00	NC

SUPERELEVATION TABLE

P.I. STA. = 238+50.55 | Dc = 0°30'00"

LEFT SIDE					CENTERLINE CONTROL		RIGHT SIDE					REMARKS
EDGE ELEVATION	TRANSITION RATE	ELEVATION CORRECTION	CROSS SLOPE	WIDTH	STATION	PROFILE GRADE	WIDTH	CROSS SLOPE	ELEVATION CORRECTON	TRANSITION RATE	EDGE ELEVATION	
771.34		0.18	0.016	11.00	236+46.92	771.16	11.00	-0.016	-0.18		770.98	NC
771.35		0.17	0.015	11.00	236+50.00	771.18	11.00	-0.015	-0.17		771.01	
771.39		0.12	0.011	11.00	236+75.00	771.27	11.00	-0.011	-0.12		771.15	
771.43		0.07	0.006	11.00	237+00.00	771.36	11.00	-0.006	-0.07		771.29	
771.43	483:1	0.01	0.001	11.00	237+25.00	771.42	11.00	-0.001	-0.01	483:1	771.41	
771.44		0.00	0.000	11.00	237+31.84	771.44	11.00	0.000	0.00		771.44	FLAT
771.40		-0.04	-0.003	11.00	237+50.00	771.44	11.00	0.003	0.04		771.48	
771.35		-0.09	-0.008	11.00	237+75.00	771.44	11.00	0.008	0.09		771.53	
771.29		-0.14	-0.013	11.00	238+00.00	771.43	11.00	0.013	0.14		771.57	
771.24		-0.18	-0.016	11.00	238+16.92	771.42	11.00	0.016	0.18		771.60	NC

CALCULATED | CHECKED

SUPERELEVATION TABLE - EAST SIDE TRANSITIONAL I-71 SB
STA 214+56.80 TO STA 238+16.92

FRA-70-14.54

1075
2317

FOR SUPERELEVATION BREAKPOINT ROUNDING SEE THE SUPERELEVATION DIAGRAM FOLLOWING THE TRANS I-71 SB (EAST SIDE) SUPERELEVATION TABLES

ms consultants, inc.

Batchplot Spec: \\msconsultants.com\files\production\03\60\06634_2E\standards\plotdr\batchplt.spc
Pen Table: \\msconsultants.com\files\Standards\ustn\ohdot\V8i\ms\plotting\pen\V8i_ms_std.tbl
Plot Driver: \\msconsultants.com\files\Standards\ustn\ohdot\V8i\ms\plotting\PDF.prtcfg
PDF: ohdotV8i
PCF: 60-06634_2E_Columbus
Ohio DOT Workspace
70\71 East Interchange 2E
www.msconsultants.com
1" 0.5" 0
34" x 22"
Model: Sheet
Printed: 6/19/2018 @ 9:00:22 AM
File: N:\03\60\06634_2E\roadway\sheets\105326E100.DGN
View: FENCE_VIEW1
By: jdouglas

34" x 22"

Model: Sheet
Printed: 6/19/2018 @ 9:00:23 AM
File: N:\03\60\06634_2E\roadway\sheets\1053222GE206.DGN
View: FENCE_VIEW1
By: jdouglas

Batchplot Spec: \\msconsultants.com\files\production\03\60\06634_2E\standards\plotdrv\batchplt.spc
Pen Table: N:\03\60\06634_2E\standards\tables\V8i_ms_std_06634_2D_Plan View.tbl
Plot Driver: \\msconsultants.com\files\Standards\ustn\ohdot\v8i\ms\plotting\PDF.pltcfg
DGF: ohdotV8i
PCF: 60-06634_2E_Columbus
Ohio DOT Workspace
70\71 East Interchange 2E

0 0.5" 1"

ms consultants, inc.
msconsultants.com
PLOT.CEL

www.msconsultants.com

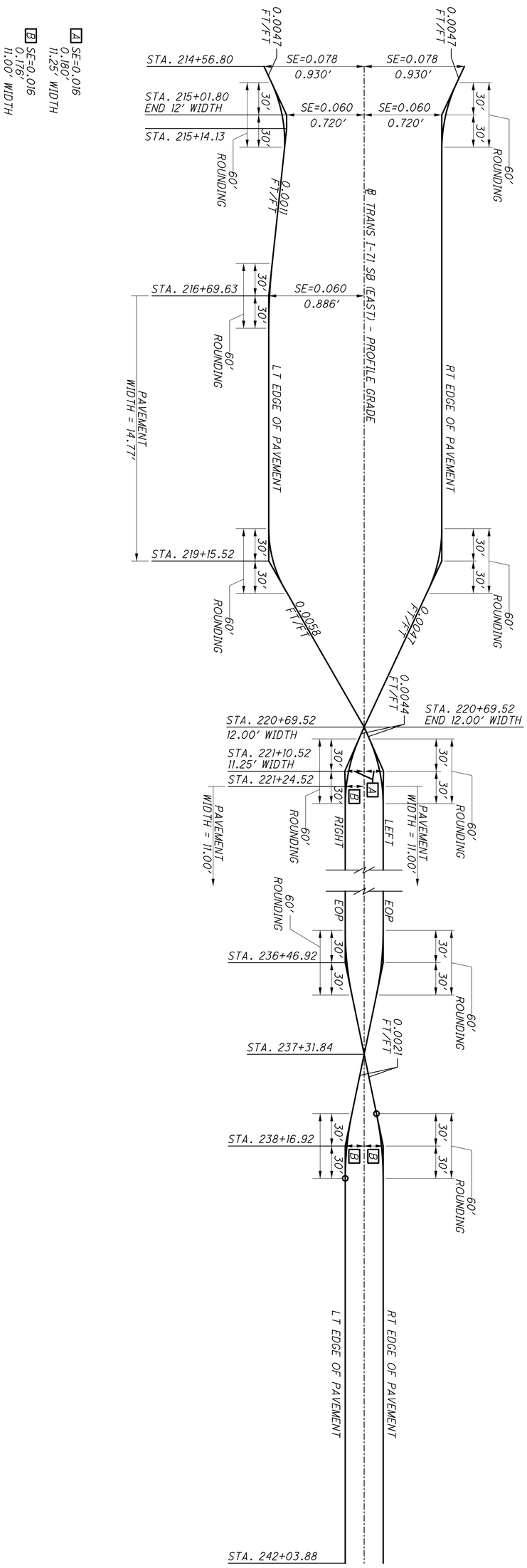

1076 2317	**FRA-70-14.54**	**SUPERELEVATION DIAGRAM TRANS I-71 SB (EAST SIDE)**

CALCULATED MAH
CHECKED TAZ

ms consultants, inc.

PLOT.CEL

ms consultants, inc.
msconsultants.com

www.msconsultants.com
70\71 East Interchange 2E
Ohio DOT Workspace

1" 0.5" 0

DGN: ohdot\V8i
PCF: 60-06634_2E_Columbus

34" x 22"

View: FENCE_VIEW1
By: jdouglas

Model: Sheet
Printed: 6/19/2018 @ 9:00:25 AM
File: N:\03\60\06634_2E\roadway\sheets\05322GE01DGN

Batchplot Spec: \\msconsultants.com\files\production\03\60\06634_2E\standards\plotdr\batchplt.spc
Pen Table: N:\03\60\06634_2E\standards\tables\V8i_ms_std_06634_2D_Plan View.tbl
Plot Driver: \\msconsultants.com\files\Standards\ustn\ohdot\v8i\ms\plotting\PDF.pltcfg

SUPERELEVATION TABLE

P.I. STA. = 689+59.74 | Dc = 7°23′02″

LEFT SIDE					CENTERLINE CONTROL		RIGHT SIDE					REMARKS
EDGE ELEVATION	TRANSITION RATE	ELEVATION CORRECTION	CROSS SLOPE	WIDTH	STATION	PROFILE GRADE	WIDTH	CROSS SLOPE	ELEVATION CORRECTON	TRANSITION RATE	EDGE ELEVATION	
762.67		-0.71	-0.059	12.00	689+89.23	763.38	12.00	0.059	0.71		764.09	FS
762.94		-0.71	-0.059	12.00	690+00.00	763.65	12.00	0.059	0.71		764.36	
763.49		-0.71	-0.059	12.00	690+25.00	764.20	12.00	0.059	0.71		764.91	
763.94		-0.71	-0.059	12.00	690+50.00	764.65	12.00	0.059	0.71		765.36	
764.00		-0.71	-0.059	12.00	690+53.64	764.71	12.00	0.059	0.71		765.42	FS
764.41		-0.59	-0.049	12.00	690+75.00	765.00	12.00	0.049	0.59		765.59	
764.79	185:1	-0.46	-0.038	12.00	691+00.00	765.25	12.00	0.038	0.46	185:1	765.71	
765.02		-0.34	-0.030	12.00	691+19.16	765.37	12.00	0.030	0.35		765.72	PT
765.07		-0.32	-0.027	12.00	691+25.00	765.39	12.00	0.027	0.32		765.71	
765.28		-0.19	-0.016	12.00	691+49.18	765.47	12.00	0.016	0.19		765.66	NC

SUPERELEVATION TABLE

P.I. STA. = 693+41.87 | Dc = 5°30′00″

LEFT SIDE					CENTERLINE CONTROL		RIGHT SIDE					REMARKS
EDGE ELEVATION	TRANSITION RATE	ELEVATION CORRECTION	CROSS SLOPE	WIDTH	STATION	PROFILE GRADE	WIDTH	CROSS SLOPE	ELEVATION CORRECTON	TRANSITION RATE	EDGE ELEVATION	
765.61		-0.19	0.016	12.00	692+22.98	765.80	12.00	0.016	0.19		765.99	NC
765.72		-0.34	-0.028	12.00	692+50.00	766.06	12.00	0.028	0.34		766.40	
765.75		-0.36	-0.030	12.00	692+54.08	766.11	12.00	0.030	0.36		766.50	
765.82	185:1	-0.42	-0.035	12.00	692+65.20	766.24	12.00	0.035	0.42	185:1	766.66	
765.91		-0.47	-0.039	12.00	692+75.00	766.38	12.00	0.039	0.47		766.85	
766.17		-0.61	-0.051	12.00	693+00.00	766.78	12.00	0.051	0.61		767.39	
766.38		-0.70	-0.058	12.00	693+16.19	767.08	12.00	0.058	0.70		767.78	
766.51		-0.74	-0.062	12.00	693+25.00	767.25	12.00	0.062	0.74		767.99	
766.74		-0.84	-0.070	12.00	693+42.92	767.58	12.00	0.070	0.84		768.42	FS
766.87		-0.84	-0.070	12.00	693+50.00	767.71	12.00	0.070	0.84		768.55	
767.32		-0.84	-0.070	12.00	693+75.00	768.16	12.00	0.070	0.84		769.00	
767.74		-0.84	-0.070	12.00	694+00.00	768.58	12.00	0.070	0.84		769.42	
768.04		-0.84	-0.070	12.00	694+18.27	768.88	12.00	0.070	0.84		769.72	FS

FOR SUPERELEVATION BREAKPOINT ROUNDING SEE THE SUPERELEVATION DIAGRAM FOLLOWING THE TRANS RAMP N4 SUPERELEVATION TABLES

CALCULATED | CHECKED

SUPERELEVATION TABLE - TRANSITIONAL RAMP N4
STA 689+89.23 TO STA 694+18.27

FRA-70-14.54

1077
2317

ms consultants, inc.

34" x 22"

Model: Sheet
Printed: 6/19/2018 @ 9:00:26 AM
File: N:\03\60\06634_2E\roadway\sheets\1053222E204.DGN
View: FENCE_VIEW1
By: jdouglas

Batchplot Spec: \\msconsultants.com\files\production\03\60\06634_2E\standards\plotdrv\batchplt.spc
Pen Table: N:\03\60\06634_2E\standards\tables\V8i_ms_std_06634_2D_Plan View.tbl
Plot Driver: \\msconsultants.com\files\Standards\ustn\ohdot\v8i\ms\plotting\PDF.pltcfg

0 1"
0.5"

DGF: ohdotV8i
PCF: 60-06634_2E_Columbus

Ohio DOT Workspace
70\71 East Interchange 2E

ms consultants, inc.
msconsultants.com

PLOT.CEL

www.msconsultants.com

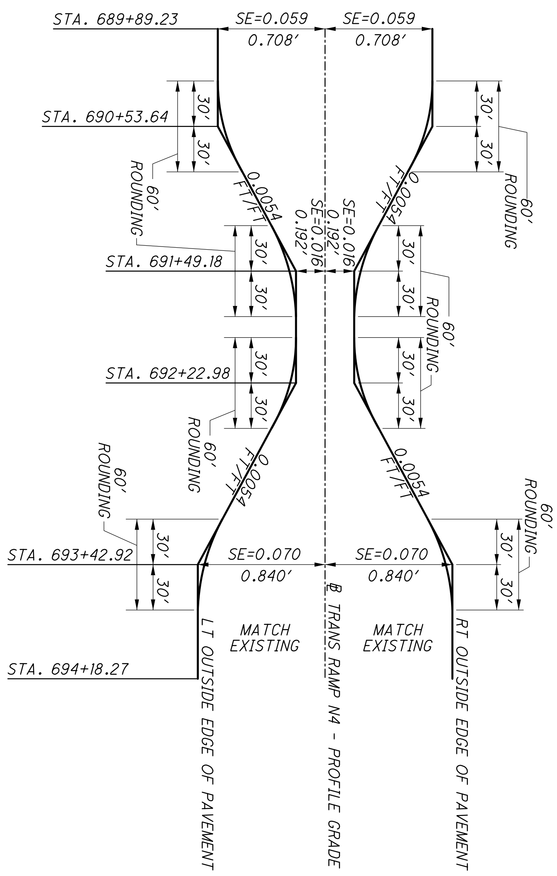

PLOT.CEL

ms consultants, inc.
msconsultants.com

www.msconsultants.com
Ohio DOT Workspace
70\71 East Interchange 2E

0 0.5" 1"

PCF: ohdot\V8i
PCF: 60-06634_2E_Columbus

Batchplot Spec: \\msconsultants.com\files\production\03\60\06634_2E\standards\plotdir\batchplt.spc
Pen Table: N:\03\60\06634_2E\standards\tables\V8i_ms_std_06634_2D_Plan View.tbl
Plot Driver: \\msconsultants.com\files\Standards\ustn\ohdot\v8i\ms\plotting\PDF.pltcfg

Model: Sheet 1
Printed: 6/19/2018 @ 9:00:27 AM
File: N:\03\60\06634_2E\roadway\sheets\105220E102.DGN
View: FENCE_VIEW1
By: jdouglas

34" x 22"

SUPERELEVATION TABLE

P.I. STA. 971+27.14 | Dc = 0° 28′ 09″

LEFT SIDE					CENTERLINE CONTROL		RIGHT SIDE					REMARKS
EDGE ELEVATION	TRANSITION RATE	ELEVATION CORRECTION	CROSS SLOPE	WIDTH	STATION	PROFILE GRADE	WIDTH	CROSS SLOPE	ELEVATION CORRECTON	TRANSITION RATE	EDGE ELEVATION	
743.17		-0.24	-0.020	12.00′	969+03.60	743.41	12.00′	0.016	0.19		743.60	PC/NC
743.64		-0.24	-0.020	12.00′	969+25.00	743.88	12.00′	0.016	0.19		744.07	
744.19		-0.24	-0.020	12.00′	969+50.00	744.43	12.00′	0.016	0.19		744.62	
744.76		-0.24	-0.020	12.00′	969+75.00	745.00	12.00′	0.016	0.19		745.19	
745.26		-0.24	-0.020	12.00′	970+00.00	745.50	12.00′	0.016	0.19		745.69	
745.77		-0.24	-0.020	12.00′	970+25.00	746.01	12.00′	0.016	0.19		746.20	
746.31		-0.24	-0.020	12.00′	970+50.00	746.55	12.00′	0.016	0.19		746.74	
746.88		-0.24	-0.020	12.00′	970+75.00	747.12	12.00′	0.016	0.19		747.31	
747.49		-0.24	-0.020	12.00′	971+00.00	747.73	12.00′	0.016	0.19		747.92	
748.13		-0.24	-0.020	12.00′	971+25.00	748.37	12.00′	0.016	0.19		748.56	
748.80		-0.24	-0.020	12.00′	971+50.00	749.04	12.00′	0.016	0.19		749.23	
749.51		-0.24	-0.020	12.00′	971+75.00	749.75	12.00′	0.016	0.19		749.94	
749.82	2|3:1	-0.24	-0.020	12.00′	971+85.31	750.06	12.00′	0.016	0.19		750.25	NC
750.17	2|3:1	-0.19	-0.016	12.00′	971+95.52	750.36	12.00′	0.016	0.19		750.55	NC

SUPERELEVATION TABLE

P.I. STA. 976+45.61 | Dc = 2° 52′ 56″

LEFT SIDE					CENTERLINE CONTROL		RIGHT SIDE					REMARKS
EDGE ELEVATION	TRANSITION RATE	ELEVATION CORRECTION	CROSS SLOPE	WIDTH	STATION	PROFILE GRADE	WIDTH	CROSS SLOPE	ELEVATION CORRECTON	TRANSITION RATE	EDGE ELEVATION	
754.41	2|3:1	-0.19	-0.016	12.00′	973+29.17	754.60	12.00′	0.016	0.19	2|3:1	754.79	NC
754.95		-0.29	-0.024	12.00′	973+50.00	755.24	12.00′	0.024	0.29		755.53	
754.97		-0.29	-0.024	12.00′	973+50.62	755.26	12.00′	0.024	0.29		755.55	PCC
755.51		-0.41	-0.034	12.00′	973+75.00	755.92	12.00′	0.034	0.41		756.33	
756.15		-0.52	-0.044	12.00′	974+00.00	756.67	12.00′	0.044	0.52		757.19	
756.55		-0.59	-0.049	12.00′	974+12.97	757.14	12.00′	0.049	0.59		757.73	FS
757.01		-0.59	-0.049	12.00′	974+25.00	757.60	12.00′	0.049	0.59		758.19	
758.13		-0.59	-0.049	12.00′	974+50.00	758.72	12.00′	0.049	0.59		759.31	
759.29		-0.59	-0.049	12.00′	974+75.00	759.88	12.00′	0.049	0.59		760.47	
760.42		-0.59	-0.049	12.00′	975+00.00	761.01	12.00′	0.049	0.59		761.60	
761.29		-0.59	-0.049	12.00′	975+20.36	761.88	12.00′	0.049	0.59		762.47	
761.49		-0.59	-0.049	12.00′	975+25.00	762.08	12.00′	0.049	0.59		762.67	
762.50		-0.59	-0.049	12.00′	975+50.00	763.09	12.00′	0.049	0.59		763.68	
763.46		-0.59	-0.049	12.00′	975+75.00	764.05	12.00′	0.049	0.59		764.64	
764.37		-0.59	-0.049	12.00′	976+00.00	764.96	12.00′	0.049	0.59		765.55	
765.22		-0.59	-0.049	12.00′	976+25.00	765.81	12.00′	0.049	0.59		766.40	
766.02		-0.59	-0.049	12.00′	976+50.00	766.61	12.00′	0.049	0.59		767.20	
766.76		-0.59	-0.049	12.00′	976+75.00	767.35	12.00′	0.049	0.59		767.94	
767.45		-0.59	-0.049	12.00′	977+00.00	768.04	12.00′	0.049	0.59		768.63	
768.08		-0.59	-0.049	12.00′	977+25.00	768.67	12.00′	0.049	0.59		769.26	
768.66		-0.59	-0.049	12.00′	977+50.00	769.25	12.00′	0.049	0.59		769.84	
769.18		-0.59	-0.049	12.00′	977+75.00	769.77	12.00′	0.049	0.59		770.36	
769.65		-0.59	-0.049	12.00′	978+00.00	770.24	12.00′	0.049	0.59		770.83	
770.06		-0.59	-0.049	12.00′	978+25.00	770.65	12.00′	0.049	0.59		771.24	
770.42		-0.59	-0.049	12.00′	978+50.00	771.01	12.00′	0.049	0.59		771.60	
770.72		-0.59	-0.049	12.00′	978+75.00	771.31	12.00′	0.049	0.59		771.90	
770.97		-0.59	-0.049	12.00′	979+00.00	771.56	12.00′	0.049	0.59		772.15	
771.16		-0.59	-0.049	12.00′	979+25.00	771.75	12.00′	0.049	0.59		772.34	
771.23		-0.59	-0.049	12.00′	979+36.33	771.82	12.00′	0.049	0.59		772.41	CS/FS

FOR SUPERELEVATION BREAKPOINT ROUNDING SEE THE SUPERELEVATION DIAGRAM FOLLOWING THE TRANS I-71 SB (EAST SIDE) SUPERELEVATION TABLES

CALCULATED JJR | CHECKED ALL

SUPERELEVATION TABLE - TRANS I-71 S.B.
STA. 969+03.60 TO STA. 979+36.33

FRA-70-14.54

1079
2317

PLOT.CEL

ms consultants, inc.
msconsultants.com

www.msconsultants.com
70\71 East Interchange 2E
Ohio DOT Workspace

PCF: 60-06634_2E_Columbus
PDF: ohdot\V8i

Batchplot Spec: \\msconsultants.com\files\production\03\60\06634_2E\standards\plotdr\batchplt.spc
Pen Table: N:\03\60\06634_2E\standards\tables\V8i_ms_std_06634_2D_Plan View.tbl
Plot Driver: \\msconsultants.com\files\Standards\ustn\ohdot\v8i\ms\plotting\PDF.pltcfg

34" x 22"

View: FENCE_VIEW1
By: jdouglas
Model: Sheet 1
Printed: 6/19/2018 @ 9:00:28 AM
File: N:\03\60\06634_2E\roadway\sheets\105220E103.DGN

SUPERELEVATION TABLE

P.I. STA. 985+52.46 | Dc = 5° 30′ 00″

LEFT SIDE					CENTERLINE CONTROL		RIGHT SIDE					REMARKS
EDGE ELEVATION	TRANSITION RATE	ELEVATION CORRECTION	CROSS SLOPE	WIDTH	STATION	PROFILE GRADE	WIDTH	CROSS SLOPE	ELEVATION CORRECTON	TRANSITION RATE	EDGE ELEVATION	
771.23		-0.59	-0.049	12.00′	979+36.33	771.82	12.00′	0.049	0.58		772.40	CS/FS
771.29		-0.60	-0.050	12.10′	979+50.00	771.89	12.00′	0.050	0.60		772.49	
771.33		-0.65	-0.052	12.47′	979+75.00	771.98	12.00′	0.052	0.62		772.60	
771.31	1190:1	-0.70	-0.053	13.00′	980+00.00	772.01	12.00′	0.053	0.64	1190:1	772.65	
771.23		-0.75	-0.055	13.58′	980+25.00	771.98	12.00′	0.055	0.66		772.64	
771.10		-0.80	-0.057	14.14′	980+50.00	771.90	12.00′	0.057	0.68		772.58	
770.92		-0.85	-0.059	14.56′	980+75.00	771.77	12.00′	0.059	0.70		772.47	
770.72		-0.89	-0.060	14.75′	980+96.33	771.61	12.00′	0.060	0.72		772.33	SC/FS
770.69		-0.89	-0.060	14.75′	981+00.00	771.58	12.00′	0.060	0.72		772.30	
770.44		-0.89	-0.060	14.75′	981+25.00	771.33	12.00′	0.060	0.72		772.05	
770.14		-0.89	-0.060	14.75′	981+50.00	771.03	12.00′	0.060	0.72		771.75	
769.79		-0.89	-0.060	14.75′	981+75.00	770.68	12.00′	0.060	0.72		771.40	
769.38		-0.89	-0.060	14.75′	982+00.00	770.27	12.00′	0.060	0.72		770.99	
768.92		-0.89	-0.060	14.75′	982+25.00	769.81	12.00′	0.060	0.72		770.53	
768.40		-0.89	-0.060	14.75′	982+50.00	769.29	12.00′	0.060	0.72		770.01	
767.83		-0.89	-0.060	14.75′	982+75.00	768.72	12.00′	0.060	0.72		769.44	
767.20		-0.89	-0.060	14.75′	983+00.00	768.09	12.00′	0.060	0.72		768.81	
766.52		-0.89	-0.060	14.75′	983+25.00	767.41	12.00′	0.060	0.72		768.13	
765.78		-0.89	-0.060	14.75′	983+50.00	766.67	12.00′	0.060	0.72		767.39	
764.99		-0.89	-0.060	14.75′	983+75.00	765.88	12.00′	0.060	0.72		766.60	
764.18		-0.89	-0.060	14.75′	984+00.00	765.07	12.00′	0.060	0.72		765.79	
763.38		-0.89	-0.060	14.75′	984+25.00	764.27	12.00′	0.060	0.72		764.99	
762.57		-0.89	-0.060	14.75′	984+50.00	763.46	12.00′	0.060	0.72		764.18	
761.76		-0.89	-0.060	14.75′	984+75.00	762.65	12.00′	0.060	0.72		763.37	
760.95		-0.89	-0.060	14.75′	985+00.00	761.84	12.00′	0.060	0.72		762.56	
760.15		-0.89	-0.060	14.75′	985+25.00	761.04	12.00′	0.060	0.72		761.76	
759.34		-0.89	-0.060	14.75′	985+50.00	760.23	12.00′	0.060	0.72		760.95	
758.53		-0.89	-0.060	14.75′	985+75.00	759.42	12.00′	0.060	0.72		760.14	
757.74		-0.89	-0.060	14.75′	986+00.00	758.63	12.00′	0.060	0.72		759.35	
757.00		-0.89	-0.060	14.75′	986+25.00	757.89	12.00′	0.060	0.72		758.61	
756.31		-0.89	-0.060	14.75′	986+50.00	757.20	12.00′	0.060	0.72		757.92	
755.68		-0.89	-0.060	14.75′	986+75.00	756.57	12.00′	0.060	0.72		757.29	
755.10		-0.89	-0.060	14.75′	987+00.00	755.99	12.00′	0.060	0.72		756.71	
754.58		-0.89	-0.060	14.75′	987+25.00	755.47	12.00′	0.060	0.72		756.19	
754.11		-0.89	-0.060	14.75′	987+50.00	755.00	12.00′	0.060	0.72		755.72	
753.69		-0.89	-0.060	14.75′	987+75.00	754.58	12.00′	0.060	0.72		755.30	
753.33		-0.89	-0.060	14.75′	988+00.00	754.22	12.00′	0.060	0.72		754.94	
753.02		-0.89	-0.060	14.75′	988+25.00	753.91	12.00′	0.060	0.72		754.63	
752.77		-0.89	-0.060	14.75′	988+50.00	753.66	12.00′	0.060	0.72		754.38	
752.57		-0.89	-0.060	14.75′	988+75.00	753.46	12.00′	0.060	0.72		754.18	
752.43		-0.89	-0.060	14.75′	989+00.00	753.32	12.00′	0.060	0.72		754.04	
752.34		-0.89	-0.060	14.75′	989+25.00	753.23	12.00′	0.060	0.72		753.95	
752.33		-0.89	-0.060	14.75′	989+30.74	753.22	12.00′	0.060	0.72		753.94	FS
752.43		-0.77	-0.052	14.75′	989+50.00	753.20	12.00′	0.052	0.63		753.83	
752.46	213:1	-0.74	-0.050	14.75′	989+56.21	753.20	12.00′	0.050	0.60		753.80	CS
752.60		-0.62	-0.043	14.59′	989+75.00	753.22	12.00′	0.043	0.51		753.73	
752.82		-0.47	-0.033	14.19′	990+00.00	753.29	12.00′	0.033	0.39		753.68	
753.10		-0.32	-0.023	13.64′	990+25.00	753.42	12.00′	0.023	0.28		753.70	
753.33		-0.21	-0.016	13.22′	990+43.20	753.54	12.00′	0.016	0.19	213:1	753.73	NC
753.39		-0.21	-0.016	13.06′	990+50.00	753.60	12.00′	0.013	0.16		753.76	
753.64		-0.20	-0.016	12.52′	990+75.00	753.84	12.00′	0.004	0.04		753.88	
753.74		-0.20	-0.016	12.36′	990+84.10	753.94	12.00′	0.000	0.00		753.94	FLAT
753.94		-0.19	-0.016	12.13′	991+00.00	754.13	12.00′	-0.006	-0.07		754.06	
754.15		-0.19	-0.016	12.00′	991+16.21	754.34	12.00′	-0.013	-0.15		754.19	ST
754.28		-0.19	-0.016	12.00′	991+25.00	754.47	12.00′	-0.016	-0.19		754.28	NC

SUPERELEVATION TABLE

LEFT SIDE					CENTERLINE CONTROL		RIGHT SIDE					REMARKS
EDGE ELEVATION	TRANSITION RATE	ELEVATION CORRECTION	CROSS SLOPE	WIDTH	STATION	PROFILE GRADE	WIDTH	CROSS SLOPE	ELEVATION CORRECTON	TRANSITION RATE	EDGE ELEVATION	

CALCULATED JJR | CHECKED ALL

SUPERELEVATION TABLE - TRANS I-71 S.B.
STA. 979+36.33 TO STA. 991+25.00

FRA-70-14.54

FOR SUPERELEVATION BREAKPOINT ROUNDING SEE THE SUPERELEVATION DIAGRAM FOLLOWING THE TRANS I-71 SB (EAST SIDE) SUPERELEVATION TABLES

1080
2317

PLOT.CEL

ms consultants, inc.
msconsultants.com

www.msconsultants.com

Ohio DOT Workspace
70\71 East Interchange 2E

PCF: 60-06634_2E_Columbus

ODF: ohdot\V8i

Batchplot Spec: \\msconsultants.com\Files\production\03\60\06634_2E\standards\plotdrv\batchplt.spc
Pen Table: N:\03\60\06634_2E\standards\tables\V8i_ms_std_06634_2D_Plan View.tbl
Plot Driver: \\msconsultants.com\Files\Standards\usth\ohdot\v8i\ms\plotting\PDF.pltcfg

Model: Sheet
Printed: 6/19/2018 @ 9:00:30 AM
File: N:\03\60\06634_2E\roadway\sheets\105220E09.DGN

View: FENCE_VIEW1
By: jdouglas

34" x 22"

1"
0.5"
0

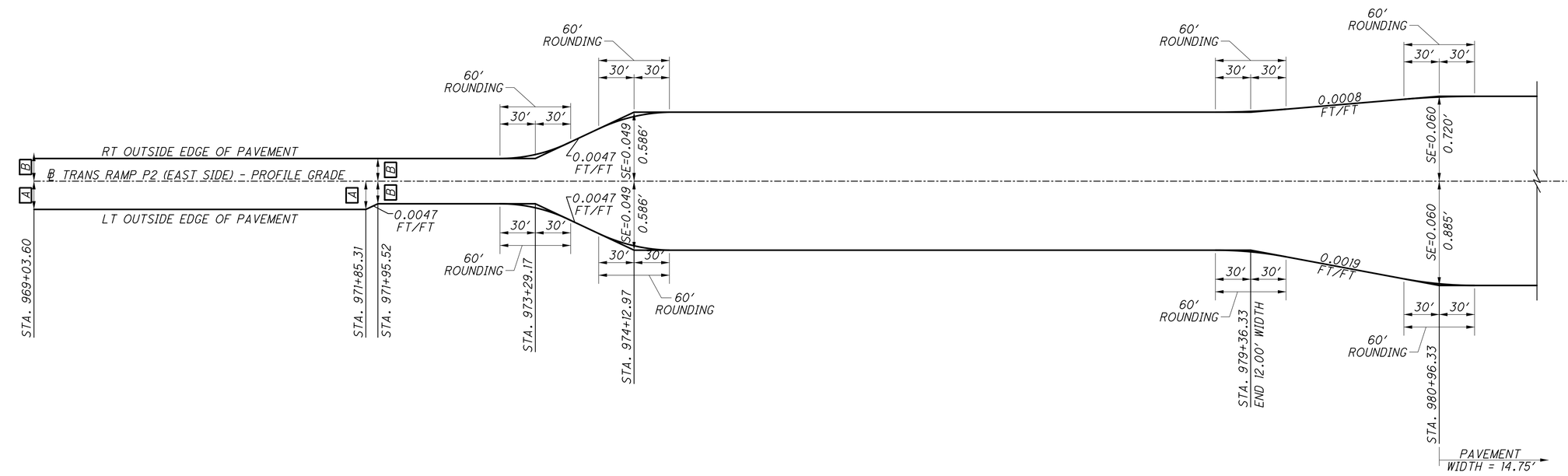

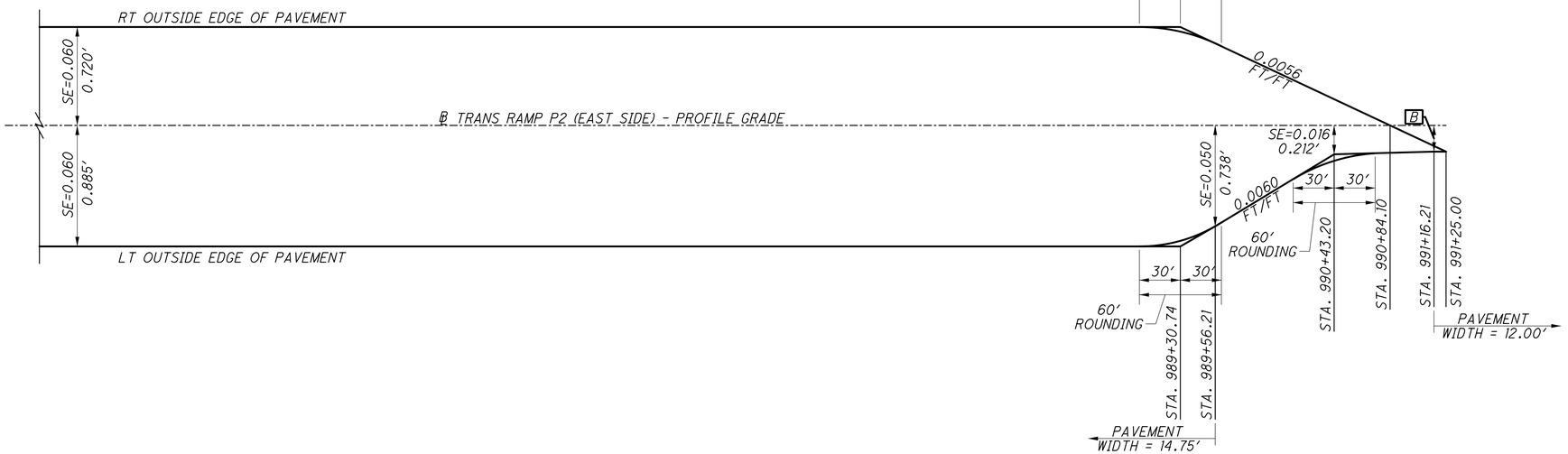

CALCULATED MAH
CHECKED TAZ

SUPERELEVATION DIAGRAM
TRANS RAMP I-71 SB (EAST SIDE)

FRA-70-14.54

1081
2317

PLOT.CEL

ms consultants, inc.
msconsultants.com

www.msconsultants.com
Ohio DOT Workspace
70\71 East Interchange 2E

1" 0.5" 0

PCF: ohdot\V8i
PCF: 60-06634_2E_Columbus

Batchplot Spec: \\msconsultants.com\files\production\03\60\06634_2E\standards\plotdr\batchplt.spc
Pen Table: N:\03\60\06634_2E\standards\tables\V8i_ms_std_06634_2D_Plan View.tbl
Plot Driver: \\msconsultants.com\files\Standards\ustn\ohdot\v8i\ms\plotting\PDF.pltcfg

Model: Sheet 1
Printed: 6/19/2018 @ 9:00:31 AM
Sheet: N:\03\60\06634_2E\roadway\sheets\105220E104.DGN

View: FENCE_VIEW1
By: jdouglas

34" x 22"

SUPERELEVATION TABLE

P.I. STA. 669+61.10 | Dc = 0° 45′ 00″ .

LEFT SIDE					CENTERLINE CONTROL		RIGHT SIDE					REMARKS
EDGE ELEVATION	TRANSITION RATE	ELEVATION CORRECTION	CROSS SLOPE	WIDTH	STATION	PROFILE GRADE	WIDTH	CROSS SLOPE	ELEVATION CORRECTON	TRANSITION RATE	EDGE ELEVATION	
743.61		-0.19	-0.016	12.00′	669+03.60	743.80	12.00′	-0.0160	-0.19		743.61	PC
744.08		-0.09	-0.007	12.00′	669+25.00	744.16	12.00′	-0.0160	-0.19		743.97	
744.45	200:1	0.00	0.000	12.00′	669+42.00	744.45	12.00′	-0.0160	-0.19		744.26	FLAT
744.63		0.04	0.003	12.00′	669+50.00	744.59	12.00′	-0.0160	-0.19		744.40	
745.20		0.17	0.014	12.00′	669+75.00	745.04	12.00′	-0.0160	-0.19		744.85	
745.33		0.19	0.016	12.00′	669+80.40	745.14	12.00′	-0.0160	-0.19		744.95	NC

SUPERELEVATION TABLE

P.I. STA. 676+00.11 | Dc = 3° 45′ 00″

LEFT SIDE					CENTERLINE CONTROL		RIGHT SIDE					REMARKS
EDGE ELEVATION	TRANSITION RATE	ELEVATION CORRECTION	CROSS SLOPE	WIDTH	STATION	PROFILE GRADE	WIDTH	CROSS SLOPE	ELEVATION CORRECTON	TRANSITION RATE	EDGE ELEVATION	
752.56		0.19	0.016	12.00′	672+54.55	752.37	12.00′	-0.016	-0.19		752.18	NC
753.16		0.09	0.007	12.00′	672+75.00	753.07	12.00′	-0.007	-0.09		752.98	
753.71		0.00	0.000	12.00′	672+93.04	753.71	12.00′	0.000	0.00		753.71	FLAT
753.93		-0.04	-0.003	12.00′	673+00.00	753.97	12.00′	0.003	0.04		754.01	
754.73	200:1	-0.16	-0.013	12.00′	673+25.00	754.89	12.00′	0.013	0.16	200:1	755.05	
755.02		-0.20	-0.017	12.00′	673+33.75	755.22	12.00′	0.017	0.20		755.42	PC
755.56		-0.29	-0.024	12.00′	673+50.00	755.85	12.00′	0.024	0.29		756.14	
756.08		-0.36	-0.030	12.00′	673+64.95	756.44	12.00′	0.030	0.36		756.80	
756.43		-0.41	-0.034	12.00′	673+75.00	756.84	12.00′	0.034	0.41		757.25	
757.33		-0.54	-0.045	12.00′	674+00.00	757.87	12.00′	0.045	0.54		758.41	
757.82		-0.60	-0.050	12.00′	674+12.95	758.42	12.00′	0.050	0.60		759.02	FS
758.33		-0.60	-0.050	12.00′	674+25.00	758.93	12.00′	0.050	0.60		759.53	
759.41		-0.60	-0.050	12.00′	674+50.00	760.01	12.00′	0.050	0.60		760.61	*
760.49		-0.60	-0.050	12.00′	674+75.00	761.09	12.00′	0.050	0.60		761.69	
761.57		-0.60	-0.050	12.00′	675+00.00	762.17	12.00′	0.050	0.60		762.77	
762.62		-0.60	-0.050	12.00′	675+25.00	763.22	12.00′	0.050	0.60		763.82	
763.62		-0.60	-0.050	12.00′	675+50.00	764.22	12.00′	0.050	0.60		764.82	
764.56		-0.60	-0.050	12.00′	675+75.00	765.16	12.00′	0.050	0.60		765.76	
765.45		-0.60	-0.050	12.00′	676+00.00	766.05	12.00′	0.050	0.60		766.65	
766.29		-0.60	-0.050	12.00′	676+25.00	766.89	12.00′	0.050	0.60		767.49	
767.08		-0.60	-0.050	12.00′	676+50.00	767.68	12.00′	0.050	0.60		768.28	
767.81		-0.60	-0.050	12.00′	676+75.00	768.41	12.00′	0.050	0.60		769.01	
768.49		-0.60	-0.050	12.00′	677+00.00	769.09	12.00′	0.050	0.60		769.69	
769.11		-0.60	-0.050	12.00′	677+25.00	769.71	12.00′	0.050	0.60		770.31	
769.68		-0.60	-0.050	12.00′	677+50.00	770.28	12.00′	0.050	0.60		770.88	
770.20		-0.60	-0.050	12.00′	677+75.00	770.80	12.00′	0.050	0.60		771.40	
770.33		-0.60	-0.050	12.00′	677+81.96	770.94	12.00′	0.050	0.60		771.53	FS
770.75		-0.51	-0.042	12.00′	678+00.00	771.26	12.00′	0.042	0.51		771.77	
771.30		-0.38	-0.032	12.00′	678+25.00	771.68	12.00′	0.032	0.38		772.07	
771.77		-0.26	-0.022	12.00′	678+50.00	772.03	12.00′	0.022	0.26		772.29	
771.98	200:1	-0.20	-0.017	12.00′	678+61.16	772.18	12.00′	0.017	0.20	200:1	772.38	PT
772.24		-0.13	-0.011	12.00′	678+75.00	772.37	12.00′	0.011	0.13		772.50	
772.71		-0.01	-0.001	12.00′	679+00.00	772.72	12.00′	0.001	0.01		772.73	
772.75		0.00	0.000	12.00′	679+01.96	772.75	12.00′	0.000	0.00		772.75	FLAT
773.25		0.12	0.010	12.00′	679+25.00	773.13	12.00′	-0.010	-0.12		773.01	
773.59		0.19	0.016	12.00′	679+40.36	773.40	12.00′	-0.016	-0.19		773.21	NC

FOR SUPERELEVATION BREAKPOINT ROUNDING SEE THE SUPERELEVATION DIAGRAM FOLLOWING THE TRANS I-70 WB (WEST SIDE) SUPERELEVATION TABLES

CALCULATED JJR | CHECKED ALL

SUPERELEVATION TABLE - TRANS I-70 W.B.
STA. 669+03.60 TO STA. 679+40.36

FRA-70-14.54

1082
2317

ms consultants, inc.

PLOT.CEL

ms consultants, inc.
msconsultants.com

www.msconsultants.com
70\71 East Interchange 2E
Ohio DOT Workspace

1" 0 0.5"

PCF: 60-06634_2E_Columbus
DF: ohdot1V8i

Batchplot Spec: \\msconsultants.com\files\production\03\60\06634_2E\standards\plotdrv\batchplt.spc
Pen Table: N:\03\60\06634_2E\standards\tables\V8i_ms_std_06634_2D_Plan View.tbl
Plot Driver: \\msconsultants.com\files\Standards\ustn\ohdot\v8i\ms\plotting\PDF.pltcfg

Model: Sheet 1
Printed: 6/19/2018 @ 9:00:32 AM
File: D:\60\06634_2E\roadway\sheets\105322GE105.DGN

View: FENCE_VIEW1
By: jdouglas

34" x 22"

SUPERELEVATION TABLE

P.I. STA. 681+52.68 | Dc = 4° 30′ 00″

LEFT SIDE					CENTERLINE CONTROL		RIGHT SIDE					REMARKS
EDGE ELEVATION	TRANSITION RATE	ELEVATION CORRECTION	CROSS SLOPE	WIDTH	STATION	PROFILE GRADE	WIDTH	CROSS SLOPE	ELEVATION CORRECTON	TRANSITION RATE	EDGE ELEVATION	
743.97		0.19	0.016	12.00′	679+60.10	773.78	12.00	-0.016	-0.19		773.59	
774.19		0.19	0.016	12.00′	679+70.75	774.00	12.12′	-0.016	-0.19		773.81	NC
774.30		0.21	0.018	12.00′	679+75.00	774.09	12.18′	-0.018	-0.22		773.87	
774.98	200:1	0.34	0.028	12.00′	680+00.00	774.64	12.67′	-0.028	-0.36	200:1	774.28	
775.11		0.36	0.030	12.00′	680+04.35	774.75	12.78	-0.030	-0.38		774.37	
775.45		0.42	0.035	12.00′	680+16.35	775.03	13.13′	-0.035	-.046		774.57	PC
775.71		0.46	0.039	12.00′	680+25.00	775.25	13.38′	-0.039	-0.52		774.73	
776.49		0.59	0.049	12.00′	680+50.00	775.90	13.95′	-0.049	-0.68		775.22	
776.88		0.65	0.054	12.00′	680+61.95	776.23	14.13′	-0.054	-0.76		775.47	FS
777.19		0.65	0.054	12.00′	680+72.60	776.54	14.25	-0.054	-0.77		775.77	
777.26		0.65	0.054	12.00′	680+75.00	776.61	14.25	-0.054	-0.77		775.84	
778.01		0.65	0.054	12.00′	681+00.00	777.36	14.25	-0.054	-0.77		776.59	
778.70		0.65	0.054	12.00′	681+22.50	778.05	14.25	-0.054	-0.77		777.28	
778.78		0.65	0.054	12.00′	681+25.00	778.13	14.20′	-0.054	-0.77		777.36	
779.55		0.65	0.054	12.00′	681+50.00	778.90	13.70′	-0.054	-0.74		778.16	
780.32		0.65	0.054	12.00′	681+75.00	779.67	13.20′	-0.054	-0.71		778.96	
781.09		0.65	0.054	12.00′	682+00.00	780.44	12.70′	-0.054	-0.69		779.75	
781.19		0.65	0.054	12.00′	682+03.28	780.54	12.63′	-0.054	-0.68		779.86	FS
781.61		0.67	0.056	12.00′	682+16.28	780.94	12.37′	-0.056	-0.69		780.25	
781.89	528:1	0.69	0.057	12.00′	682+25.00	781.20	12.20′	-0.057	-0.70	528:1	780.50	
782.24		0.71	0.059	12.00′	682+36.29	781.53	12.00′	-0.059	-0.71		780.82	
782.40		0.72	0.060	12.00′	682+41.28	781.68	12.00′	-0.060	-0.72		780.96	FS
782.65		0.72	0.060	12.00′	682+50.00	781.93	12.00′	-0.060	-0.72		781.21	FS
783.17		0.72	0.060	12.00′	682+68.26	782.45	12.00′	-0.060	-0.72		781.73	EX. FS

SUPERELEVATION TABLE

LEFT SIDE					CENTERLINE CONTROL		RIGHT SIDE					REMARKS
EDGE ELEVATION	TRANSITION RATE	ELEVATION CORRECTION	CROSS SLOPE	WIDTH	STATION	PROFILE GRADE	WIDTH	CROSS SLOPE	ELEVATION CORRECTON	TRANSITION RATE	EDGE ELEVATION	

FOR SUPERELEVATION BREAKPOINT ROUNDING SEE THE SUPERELEVATION DIAGRAM FOLLOWING THE TRANS I-70 WB (WEST SIDE) SUPERELEVATION TABLES

CALCULATED JJR | CHECKED ALL

SUPERELEVATION TABLE - TRANS I-70 W.B.
STA. 679+70.75 TO STA. 682+68.26

FRA-70-14.54

1083
2317

ms consultants, inc.

34" x 22"
Model: Sheet View: FENCE_VIEW1
Printed: 6/19/2018 @ 9:00:34 AM By: jdouglas
File: N:\03\60\06634_2E\roadway\sheets\105322GE201.DGN
Batchplot Spec: \\msconsultants.com\files\production\03\60\06634_2E\standards\plotdrv\batchplt.spc
Pen Table: N:\03\60\06634_2E\standards\tables\V8i_ms_std_06634_2D_Plan View.tbl
Plot Driver: \\msconsultants.com\files\Standards\ustn\ohdot\v8i\ms\plotting\PDF.pltcfg
DGF: ohdotV8i
PCF: 60-06634_2E_Columbus
Ohio DOT Workspace
70\71 East Interchange 2E
ms consultants, inc.
msconsultants.com
PLOT.CEL
www.msconsultants.com

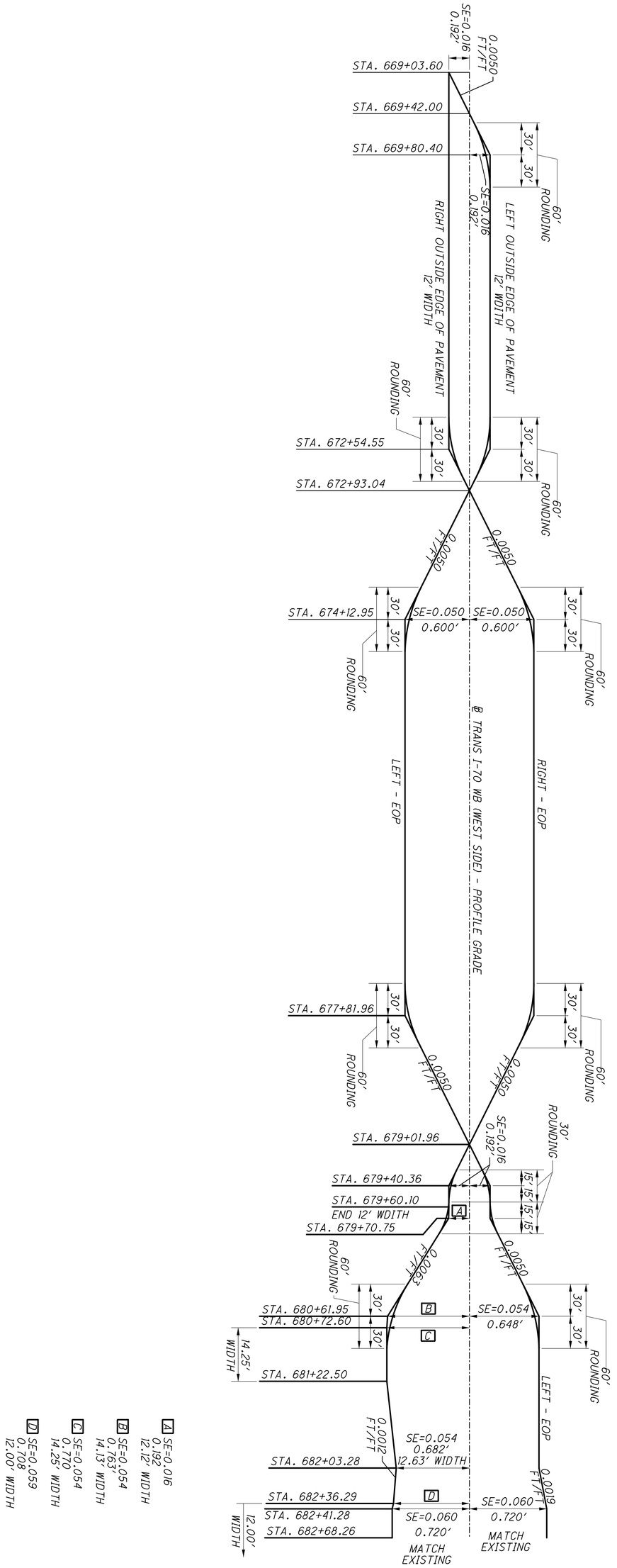

1084 2317	**FRA-70-14.54**	**SUPERELEVATION DIAGRAM TRANS I-70 WB (WEST SIDE)**

CALCULATED MAH
CHECKED TAZ

ms consultants, inc.

PLOT.CEL
ms consultants, inc.
msconsultants.com
www.msconsultants.com
Ohio DOT Workspace
70\71 East Interchange 2E
DGN: ohdot\V8i
PCF: 60-06634_2E_Columbus
Batchplot Spec: \\msconsultants.com\files\production\03\60\06634_2E\standards\plotdrv\batchplt.spc
Pen Table: N:\03\60\06634_2E\standards\tables\V8i_ms_std_06634_2D_Plan View.tbl
Plot Driver: \\msconsultants.com\files\Standards\usetn\ohdot\v8i\ms\plotting\PDF.pltcfg
Model: Sheet
Printed: 6/19/2018 @ 9:00:42 AM
File: N:\03\60\06634_2E\roadway\sheets\1741_1053226016.dgn
View: FENCE_VIEW1
By: jdouglas
34" x 22"

EXISTING UTILITY DISPOSITION
ALL SURFACE UTILITY OBJECTS SHALL BE ADJUSTED TO GRADE AS NEEDED. SEE PLAN SHEET INDEX (SHEET 903) FOR EXISTING UTILITY SYMBOLS.

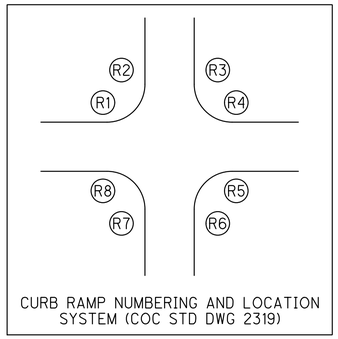

CURB RAMP NUMBERING AND LOCATION SYSTEM (COC STD DWG 2319)

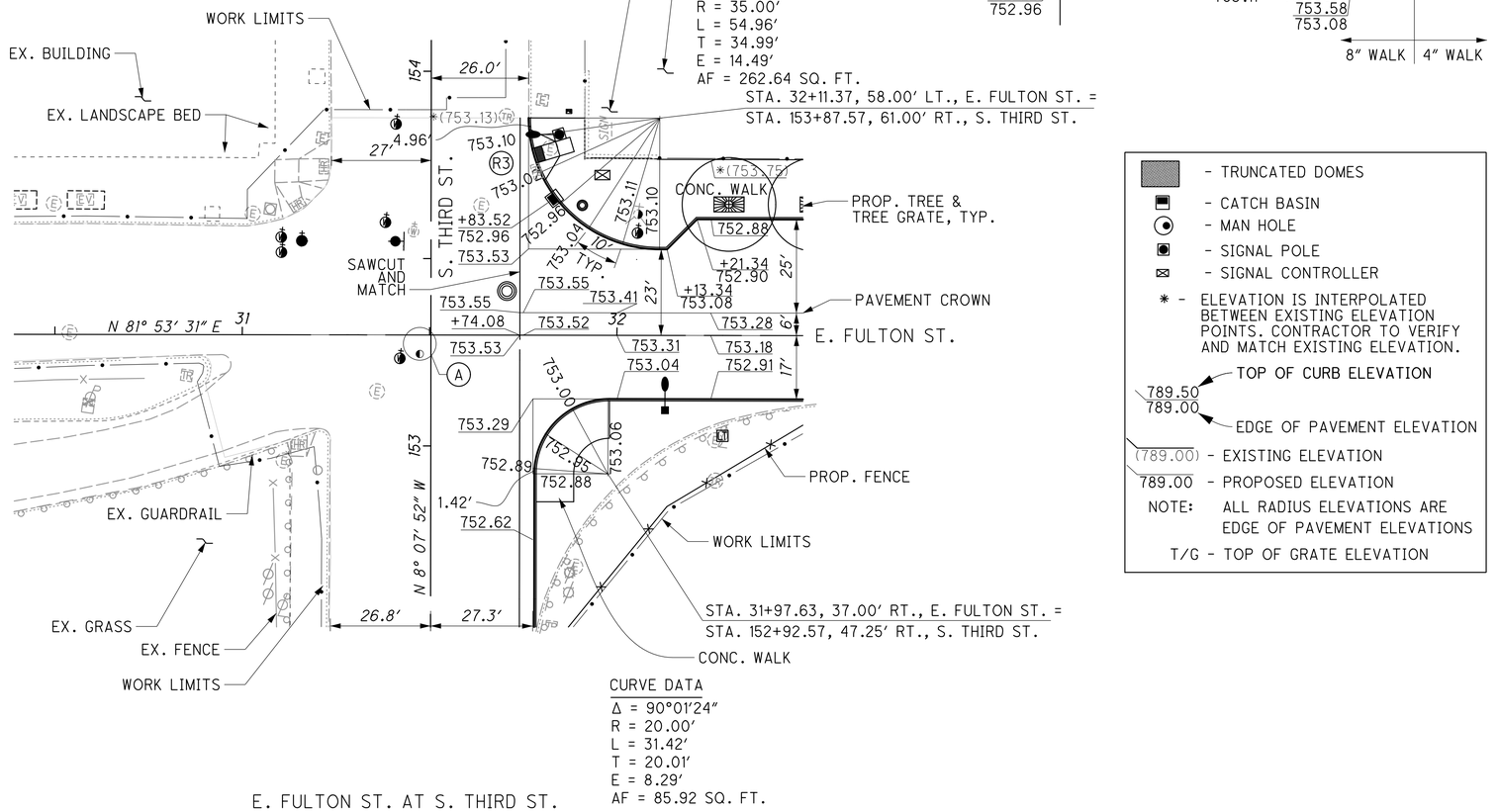

- TRUNCATED DOMES
- CATCH BASIN
- MAN HOLE
- SIGNAL POLE
- SIGNAL CONTROLLER
- ✱ - ELEVATION IS INTERPOLATED BETWEEN EXISTING ELEVATION POINTS. CONTRACTOR TO VERIFY AND MATCH EXISTING ELEVATION.

789.50 / 789.00 - TOP OF CURB ELEVATION / EDGE OF PAVEMENT ELEVATION

(789.00) - EXISTING ELEVATION

789.00 - PROPOSED ELEVATION

NOTE: ALL RADIUS ELEVATIONS ARE EDGE OF PAVEMENT ELEVATIONS

T/G - TOP OF GRATE ELEVATION

E. FULTON ST. AT S. THIRD ST.

Ⓐ STA 31+50.36, ℄ FULTON ST. =
STA 153+29.59, ℄ THIRD ST.

CALCULATED DJK
CHECKED SPK

INTERSECTION & CURB RAMP DETAILS
E. FULTON ST. AT S. THIRD ST.

FRA-70-14.54

1085
2317

PLOT.CEL
ms consultants, inc.
msconsultants.com
www.msconsultants.com
Ohio DOT Workspace
70\71 East Interchange 2E
DGN: ohdot\V8i
PCF: 60-06634_2E_Columbus
Batchplot Spec: \\msconsultants.com\files\production\03\60\06634_2E\standards\plotdir\batchplt.spc
Pen Table: N:\03\60\06634_2E\standards\tables\V8i_ms_std_06634_2D_Plan View.tbl
Plot Driver: \\msconsultants.com\files\Standards\ustn\ohdot\v8i\ms\plotting\PDF.pltcfg
Model: Sheet
Printed: 6/19/2018 @ 9:00:47 AM
File: N:\03\60\06634_2E\roadway\sheets\1742_1053220029.dgn
View: FENCE_VIEW1
By: jbougha
34" x 22"

DETAIL SCALE IN FEET:

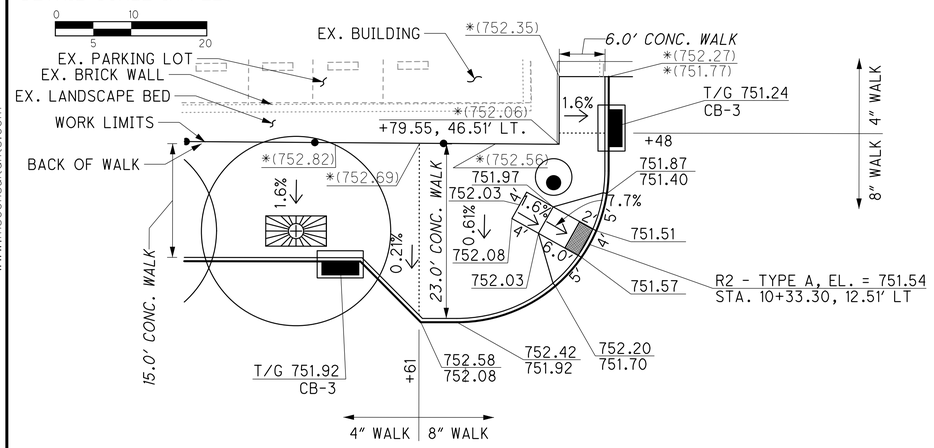

EXISTING UTILITY DISPOSITION
ALL SURFACE UTILITY OBJECTS SHALL BE ADJUSTED TO GRADE AS NEEDED. SEE PLAN SHEET INDEX (SHEET 903) FOR EXISTING UTILITY SYMBOLS.

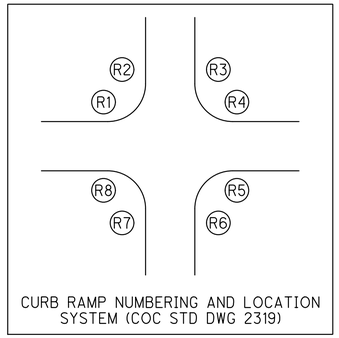

CURB RAMP NUMBERING AND LOCATION SYSTEM (COC STD DWG 2319)

DETAIL SCALE IN FEET:

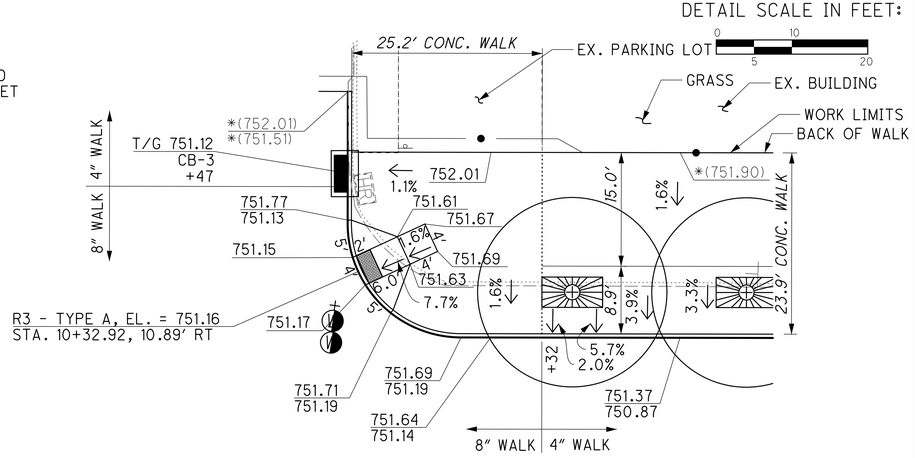

CURVE DATA
Δ = 90°00'00"
R = 20.00'
L = 31.42'
T = 20.00'
E = 8.28'
AF = 85.84 SQ. FT.

CURVE DATA
Δ = 90°00'00"
R = 15.00'
L = 23.56'
T = 15.00'
E = 6.21'
AF = 48.29 SQ. FT.

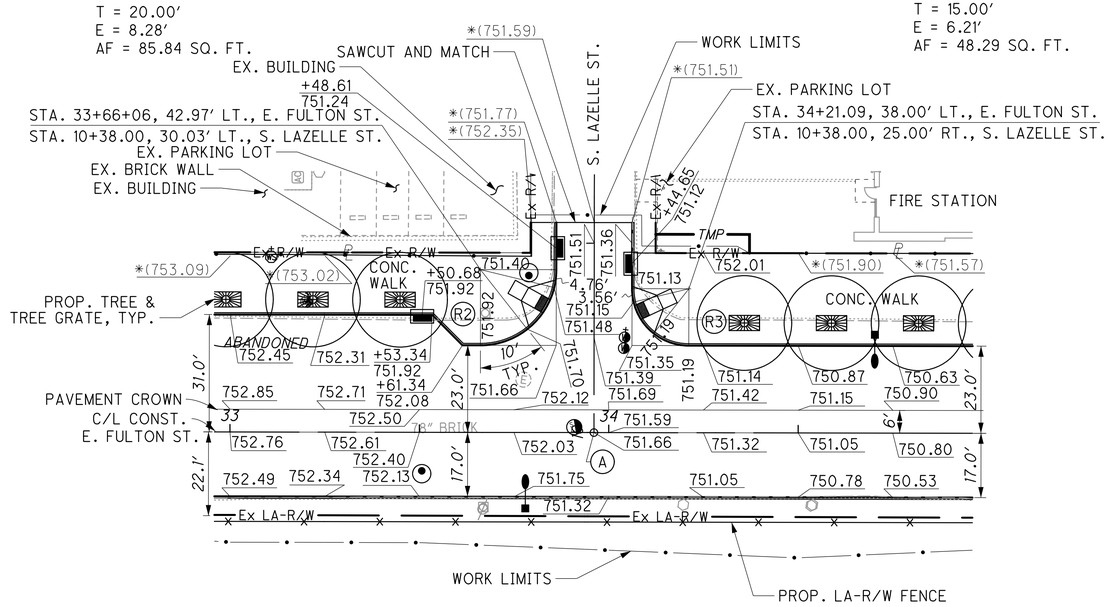

- TRUCTATED DOMES
- CATCH BASIN
- MAN HOLE
- SIGNAL POLE
- SIGNAL CONTROLLER
- ELEVATION IS INTERPOLATED BETWEEN EXISTING ELEVATION POINTS. CONTRACTOR TO VERIFY AND MATCH EXISTING ELEVATION.

789.50 / 789.00 — TOP OF CURB ELEVATION / EDGE OF PAVEMENT ELEVATION
(789.00) - EXISTING ELEVATION
789.00 - PROPOSED ELEVATION
NOTE: ALL RADIUS ELEVATIONS ARE EDGE OF PAVEMENT ELEVATIONS
T/G - TOP OF GRATE ELEVATION

E. FULTON ST. AT S. LAZELLE ST.

(A) STA 33+96.01, ℄ FULTON ST. = STA 10+00.00, ℄ LAZELLE ST.

HORIZONTAL SCALE IN FEET
0 10 20 40

CALCULATED DJK
CHECKED SPK

INTERSECTION & CURB RAMP DETAILS
E. FULTON ST. AT S. LAZELLE ST.

FRA-70-14.54

1086
2317

ms consultants, inc.

PLOT.CEL

ms consultants, inc.
msconsultants.com

Ohio DOT Workspace
70\71 East Interchange 2E
www.msconsultants.com
DGN: ohdot\V8i
PCF: 60-06634_2E_Columbus

Batchplot Spec: \\msconsultants.com\files\production\03\60\06634_2E\standards\plotdrv\batchplt.spc
Pen Table: N:\03\60\06634_2E\standards\tables\V8i_ms_std_06634_2D_Plan View.tbl
Plot Driver: \\msconsultants.com\files\Standards\usetn\ohdot\v8i\ms\plotting\PDF.pltcfg

Model: Sheet
Printed: 8/27/2018 @ 8:46:47 AM
File: N:\03\60\06634_2E\roadway\sheets\1743_105322C017.dgn
View: FENCE_VIEW1
By: jbougas

34" x 22"

DETAIL SCALE IN FEET: 0 10 5 20

*(751.21)
15' CONC. WALK
T/G 750.13
CB-3
+84
750.84
750.26
8" WALK 4" WALK
*(750.66)
+00.62, 47.43 LT.
1.6%
750.70
6.16'
WORK LIMITS
PRIVATE SIGN
*(751.52)
750.76
1.56%
5.4%
6.5'
4.5'
750.35
BACK OF WALK
16.08'
750.76
750.65
750.74
750.67
750.61
750.59
750.71
750.21
750.78
750.28
750.68
750.18
750.54
750.04
750.15
7.7%
R2 - TYPE A, EL. = 750.35
STA. 154+74.82, 26.09' LT.
750.35 STA. 154+74.82, 26.09' LT.
750.82
750.32
24' CONC. WALK
6.0% 1.6%
14'
10'
6.0'
5'
4'
2'
+88
750.13
750.60
750.10
4" WALK 8" WALK
R1 - TYPE A, EL. = 750.14
STA. 35+96.03, 23.00' LT.

EXISTING UTILITY DISPOSITION
ALL SURFACE UTILITY OBJECTS SHALL BE ADJUSTED TO GRADE AS NEEDED. SEE PLAN SHEET INDEX (SHEET 903) FOR EXISTING UTILITY SYMBOLS.

R2 R3 R1 R4 R8 R5 R7 R6
CURB RAMP NUMBERING AND LOCATION SYSTEM (COC STD DWG 2319)

CURVE DATA
Δ = 89°58'45"
R = 20.00'
L = 31.41'
T = 19.99'
E = 8.28'
AF = 85.77 SQ. FT.

WORK LIMITS
*(750.37)
*(750.85)
*(750.24)
EX. WALL
EX. LANDSCAPE BED
EX. PARKING LOT
PRIVATE SIGN
STA. 35+96.03, 43.00' LT., E. FULTON ST. =
STA. 154+73.35, 46.09' LT., S. FOURTH ST.
*(751.21)
26'
26'
750.73
750.36
750.77
750.16
155
+90.39
750.17
5'
R2
R3
750.58
750.27
750.35
1.41'
750.34
*(751.14)
*(751.52)
750.28
(E)
+63.82
750.39
CONC. WALK
750.04
+58.03
750.02
750.04
R1
750.14
750.12
750.31
750.32
750.44
750.46
750.62
750.52
23'
PAVEMENT CROWN
C/L CONST.
E. FULTON ST.
750.21
750.22
750.34
36'
750.48
+60.18
749.93
+89.49
750.07
+09.49
749.94
750.11
750.56
17'
749.88
750.45
750.73
750.57
750.64
750.67
750.84
R8
R7
5.7'
154'
9.26'
750.87
751.04
751.29
751.23
+85.68
751.08
751.85
CONC. WALK
*(751.57)
*(751.17)
25.21'
12.5'
+30.67
END OF PROP. CURB LT.
PAVEMENT CROWN
S. FOURTH ST.
*(752.24)
*(751.49)
END OF EXISTING APPROACH SLAB, (DND)
SAW CUT AND MATCH
EX. PARKING LOT
+98.00
749.95
*(750.79)
PRIVATE SIGN
STA. 36+78.03, 33.00' LT., E. FULTON ST. =
STA. 154+63.38, 35.91' RT., S. FOURTH ST.
EX. FENCE
*(751.82)
*(750.98)
*(751.50)
+28.65
750.36
CONC. WALK
+24.91
750.49
(750.82)
+16.91
750.54
(751.22)
750.89
750.59
750.80
(751.12)
6'
31'
17'
+79.41
750.18
750.38
750.61
750.69
23'
750.54
750.51
+76.35
37'
750.54
+96.35
750.59
+70.84
750.20
750.62
A
10' TYP.
750.32
+21.04
750.32
750.53
(750.85)
CONC. WALK
751.18
(751.50)
750.98
PROP. SHRUBS
STA. 36+79.59, 42.00' RT., E. FULTON ST. =
STA. 153+88.38, 37.50' RT., S. FOURTH ST.
+06.22
750.81
750.68
750.24
GRASS
EX. FENCE
STA. 36+06.88, 27.00' RT., E. FULTON ST. =
STA. 153+03.36, 35.21' LT., S. FOURTH ST.
WORK LIMITS
751.70
751.74

CURVE DATA
Δ = 90°01'15"
R = 10.00'
L = 15.71'
T = 10.00'
E = 4.14'
AF = 21.46 SQ. FT.

14' CONC. WALK
TOC 750.61
PB
T/G 749.95
CB-3A
0.4%
TOC *(750.66)
EX. FENCE
EX. PARKING LOT
PRIVATE SIGN
TOC (750.61)
+82.82, 47.68' LT.
BACK OF WALK
WORK LIMITS
*(751.35)
*(751.50)
LT
0.4%
+84
750.01
750.56
750.05
750.57
6.23'
2'
5'
4'
7.65%
0.4%
4'
750.59
6.8'
4'
750.63
15.68'
*(750.98)
R3 - TYPE A, EL. = 750.07
STA. 154+74.82, 25.95' RT.
750.09
750.61
750.73
4'
750.13
750.68
750.63
750.74
750.17
750.71
750.22
750.80
750.18
750.85
T/G 750.18
CB-3
750.85
750.18
750.23
750.28
750.89
750.34
+96
8" WALK 4" WALK
R4 - TYPE A, EL. = 750.26
STA. 36+88.18, 23.00' LT.
8" WALK 4" WALK
24' CONC. WALK
9'
7'
1.6%
751.36
5.0%
1.29%
0.4%
750.79
16' CONC. WALK
750.88
750.38
751.04
750.54
751.00
750.39
T/G 750.37
CB-3

CURVE DATA
Δ = 90°01'15"
R = 10.00'
L = 15.71'
T = 10.00'
E = 4.14'
AF = 21.479 SQ. FT.

CURVE DATA
Δ = 89°58'45"
R = 25.00'
L = 39.26'
T = 25.03'
E = 10.37'
AF = 134.44 SQ. FT.

4" WALK 8" WALK
R8 - TYPE A, EL. = 750.05
STA. 35+96.12, 17.00' RT.
+98
750.06
750.51
750.04
750.01
750.59
750.09
750.61
750.11
750.45
749.89
749.95
750.45
5'
4'
5'
2'
LT
5.9'
7.7%
750.65
751.15
10' CONC. WALK
750.49
1.6%
750.51
750.57
4'
750.53
751.20
4'
750.70
750.55
B
751.26
1.6%
5.9'
5'
+98
8" WALK
4" WALK
R7 - TYPE A, EL. = 750.72
STA. 153+95.71, 25.21' LT.
4'
2'
5'
4"
750.75
751.31
751.25
751.32
751.32
4.77'
7.7%
GRASS
EX. FENCE
WORK LIMITS
BACK OF WALK
751.70
1.6%
751.54
751.04
10' CONC WALK

BACK OF CURVE DATA
Δ = 90°01'15"
R = 3.00'
L = 4.71'
T = 3.00'
E = 1.24'

DETAIL SCALE IN FEET: 0 10 5 20

(B) STA. 36+03.38, 30.50' RT., E. FULTON ST. =
STA. 153+99.86, 38.71' LT., S. FOURTH ST.

E. FULTON ST. AT S. FOURTH ST.

(A) STA 36+42.11, ℄ FULTON ST. =
STA 154+30.37, ℄ FOURTH ST.

8" WALK 4" WALK
R5 - TYPE A, EL. = 750.27
STA. 36+88.12, 17.00' RT.
750.26
750.82
750.25
+86
750.27
750.80
750.30
750.82
750.32
T/G 750.19
CB-3
750.83
750.24
5'
4'
5'
TOC 750.71
1.23'
2'
7.2%
750.74
4.02'
10' CONC. WALK
750.94
750.44
750.73
1.6%
4'
1.6%
4'
751.13
750.63
750.79
750.80
750.86
750.98
751.25
750.75
6.0'
4'
1.6%
751.10
751.31
5'
4'
751.37
750.81
751.41
750.91
7.7%
751.31
4.01'
BACK OF WALK
4" WALK 8" WALK
+78
751.58
751.08
751.85
1.6%
10' CONC. WALK
R6 - TYPE A, EL. = 750.78
STA. 153+92.83, 12.90' RT.
DETAIL SCALE IN FEET: 0 10 5 20

- TRUNCATED DOMES
TOC - TOP OF CURB
- CATCH BASIN
- MAN HOLE
- SIGNAL POLE
- SIGNAL CONTROLLER
* - ELEVATION IS INTERPOLATED BETWEEN EXISTING ELEVATION POINTS. CONTRACTOR TO VERIFY AND MATCH EXISTING ELEVATION.
789.50 - TOP OF CURB ELEVATION
789.00 - EDGE OF PAVEMENT ELEVATION
(789.00) - EXISTING ELEVATION
789.00 - PROPOSED ELEVATION
NOTE: ALL RADIUS ELEVATIONS ARE EDGE OF PAVEMENT ELEVATIONS
T/G - TOP OF GRATE ELEVATION

N
0 20 40
0 0.5" 1"
HORIZONTAL SCALE IN FEET
CALCULATED DJK
CHECKED SPK

INTERSECTION & CURB RAMP DETAILS E. FULTON ST. AT S. FOURTH ST.

FRA-70-14.54

1087
2317

ms consultants, inc.

PLOT.CEL
ms consultants, inc.
msconsultants.com
Ohio DOT Workspace
70\71 East Interchange 2E
www.msconsultants.com
PCF: 60-06634_2E_Columbus
DGF: ohdot\V8i
Batchplot Spec: \\msconsultants.com\files\production\03\60\06634_2E\standards\plotdrv\batchplt.spc
Pen Table: N:\03\60\06634_2E\standards\tables\V8i_ms_std_06634_2D_Plan View.tbl
Plot Driver: \\msconsultants.com\files\Standards\ustn\ohdot\v8i\ms\plotting\PDF.pltcfg
Model: Sheet View: FENCE_VIEW1
Printed: 8/27/2018 @ 9:14:35 AM By: jdoughas
File: N:\03\60\06634_2E\roadway\sheets\1750_1053220023.dgn
34" x 22"

EXISTING UTILITY DISPOSITION
ALL SURFACE UTILITY OBJECTS SHALL BE ADJUSTED TO GRADE AS NEEDED. SEE PLAN SHEET INDEX (SHEET 903) FOR EXISTING UTILITY SYMBOLS.

CURB RAMP NUMBERING AND LOCATION SYSTEM (COC STD DWG 2319)

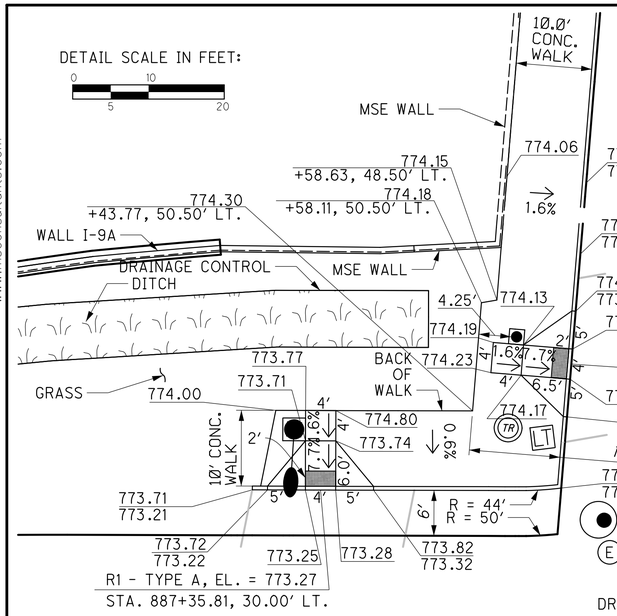

Ⓔ EOP
CURVE DATA
Δ = 5°50'41"
R = 50.00'
L = 5.10'
T = 2.55'
E = 0.065'

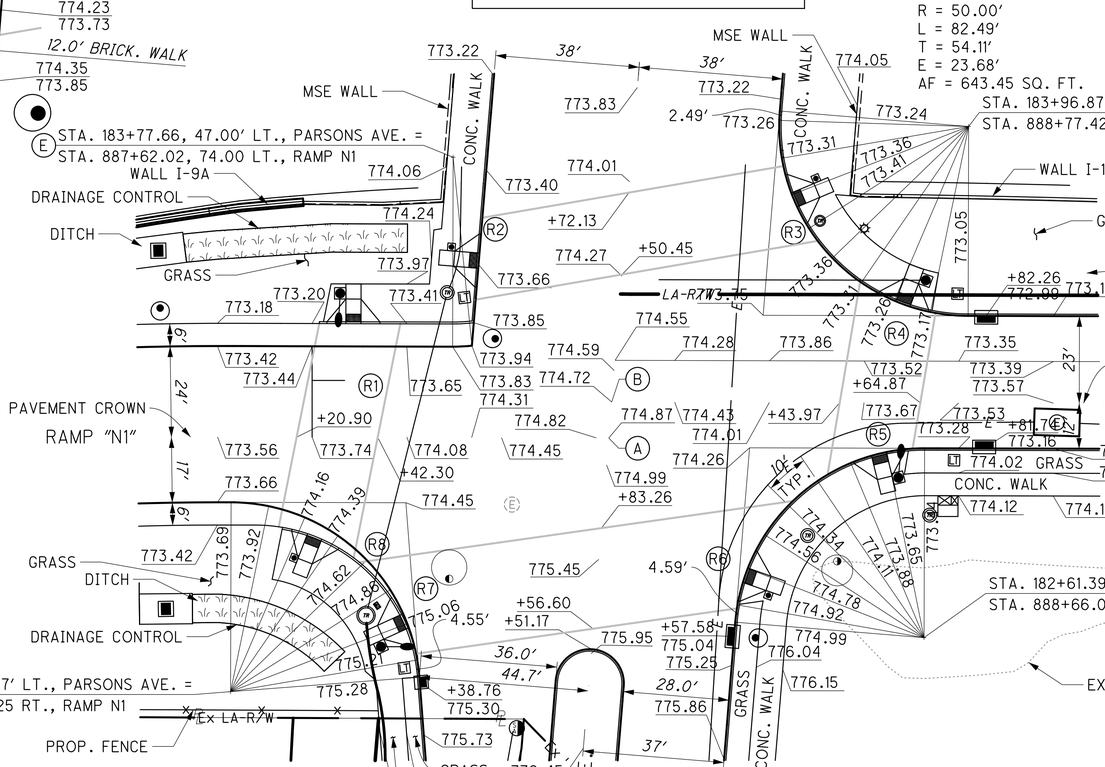

CURVE DATA
Δ = 94°31'30"
R = 50.00'
L = 82.49'
T = 54.11'
E = 23.68'
AF = 643.45 SQ. FT.
STA. 183+96.87, 88.00' RT., PARSONS AVE. =
STA. 888+77.42, 73.00' RT., MOOBERRY ST.
R4 - TYPE A, EL. = 773.25
STA. 888+60.17, 26.07' LT.

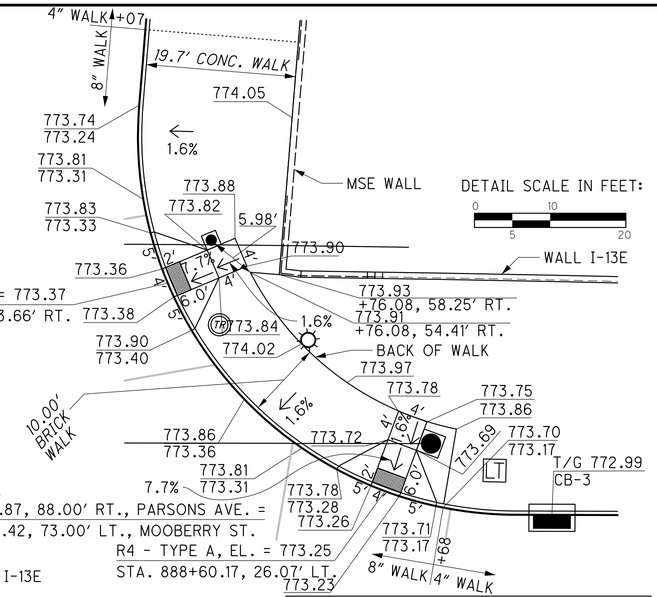

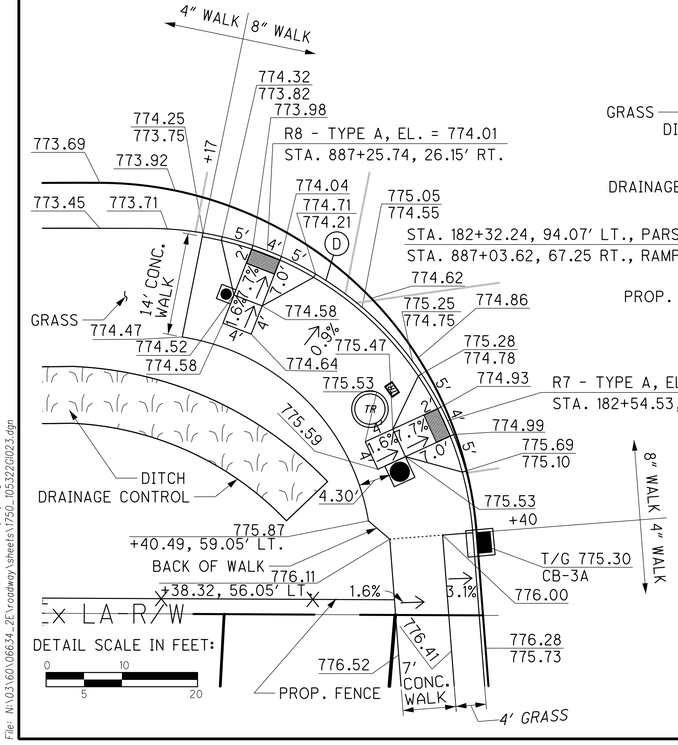

Ⓓ CURB
CURVE DATA
Δ = 85°26'05"
R = 43.48'
L = 64.84'
T = 40.15'
E = 15.69'
AF = 336.04 SQ. FT.
STA. 887+10.12, 66.73' RT., RAMP N1 =
STA. 182+33.27, 87.63' LT., PARSONS AVE.

CURVE DATA
Δ = 85°26'05"
R = 50.00'
L = 74.56'
T = 46.16'
E = 18.05'
AF = 444.31 SQ. FT.

CURVE DATA
Δ = 85°28'30"
R = 50.00'
L = 74.59'
T = 46.20'
E = 18.08'
AF = 445.19 SQ. FT.

R6 - TYPE A, EL. = 774.81
STA. 182+73.96, 38.88' RT.

PARSONS AVE. AT MOOBERRY ST. & RAMP "N1"

Ⓐ STA 888+03.31, ℄ RAMP "N1" =
STA 183+07.14, ℄ PARSONS AVE.

Ⓑ STA 887+83.37, ℄ MOOBERRY ST. =
STA 183+16.67, ℄ PARSONS AVE.

Ⓒ STA. 182+61.93, 87.78' RT., PARSONS AVE. =
STA. 888+66.55, 61.50' RT., MOOBERRY ST.

- TRUNCATED DOMES
- CATCH BASIN
- MAN HOLE
- SIGNAL POLE
- SIGNAL CONTROLLER
- ELEVATION IS INTERPOLATED BETWEEN EXISTING ELEVATION POINTS. CONTRACTOR TO VERIFY AND MATCH EXISTING ELEVATION.

789.50 / 789.00 - TOP OF CURB ELEVATION

(789.00) - EXISTING ELEVATION

789.00 - PROPOSED ELEVATION

NOTE: ALL RADIUS ELEVATIONS ARE EDGE OF PAVEMENT ELEVATIONS

T/G - TOP OF GRATE ELEVATION

HORIZONTAL SCALE IN FEET
0 20 40

CALCULATED DJK
CHECKED DWO

INTERSECTION & CURB RAMP DETAILS
PARSONS AVE. AT MOOBERRY ST. & RAMP "N1"

FRA-70-14.54

1088
2317

ms consultants, inc.

PLOT.CEL

ms consultants, inc.
msconsultants.com

www.msconsultants.com

Ohio DOT Workspace
70\71 East Interchange 2E

PCF: 60-06634_2E_Columbus
DF: ohdot\V8i

Batchplot Spec: \\msconsultants.com\files\production\03\60\06634_2E\standards\plotdrv\batchplt.spc
Pen Table: N:\03\60\06634_2E\standards\tables\V8i_ms_std_06634_2D_Plan View.tbl
Plot Driver: \\msconsultants.com\files\Standards\ustn\ohdot\v8i\ms\plotting\PDF.pltdrv

Model: Sheet
Printed: 6/19/2018 @ 9:01:08 AM
File: N:\03\60\06634_2E\roadway\sheets\1751_1053220021.dgn
View: FENCE_VIEW1
By: jdouglas

34" x 22"

EXISTING UTILITY DISPOSITION
ALL SURFACE UTILITY OBJECTS SHALL BE ADJUSTED TO GRADE AS NEEDED. SEE PLAN SHEET INDEX (SHEET 903) FOR EXISTING UTILITY SYMBOLS.

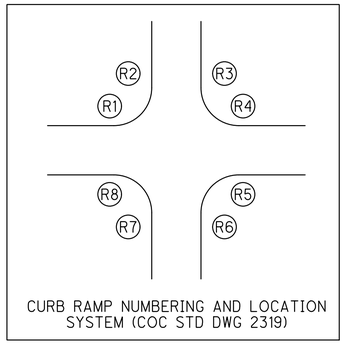

CURB RAMP NUMBERING AND LOCATION SYSTEM (COC STD DWG 2319)

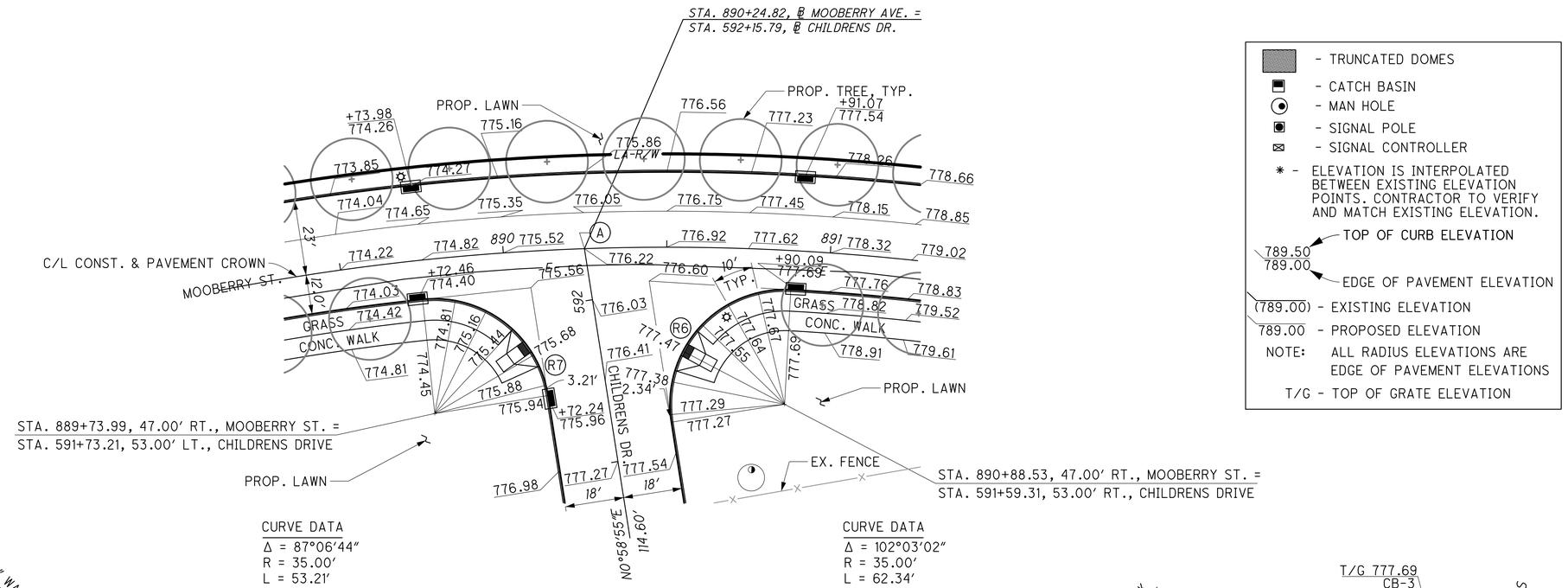

- TRUNCATED DOMES
- CATCH BASIN
- MAN HOLE
- SIGNAL POLE
- SIGNAL CONTROLLER
- ELEVATION IS INTERPOLATED BETWEEN EXISTING ELEVATION POINTS. CONTRACTOR TO VERIFY AND MATCH EXISTING ELEVATION.

789.50 / 789.00 - TOP OF CURB ELEVATION / EDGE OF PAVEMENT ELEVATION

(789.00) - EXISTING ELEVATION

789.00 - PROPOSED ELEVATION

NOTE: ALL RADIUS ELEVATIONS ARE EDGE OF PAVEMENT ELEVATIONS

T/G - TOP OF GRATE ELEVATION

CURVE DATA
Δ = 87°06'44"
R = 35.00'
L = 53.21'
T = 33.28'
E = 13.30'
AF = 233.522 SQ. FT.

CURVE DATA
Δ = 102°03'02"
R = 35.00'
L = 62.34'
T = 43.26'
E = 20.65'
AF = 423.179 SQ. FT.

MOOBERRY ST. AT CHILDRENS DR.

Ⓐ STA 890+24.82, ℄ MOOBERRY ST. =
STA 592+15.79, ℄ CHILDRENS DR.

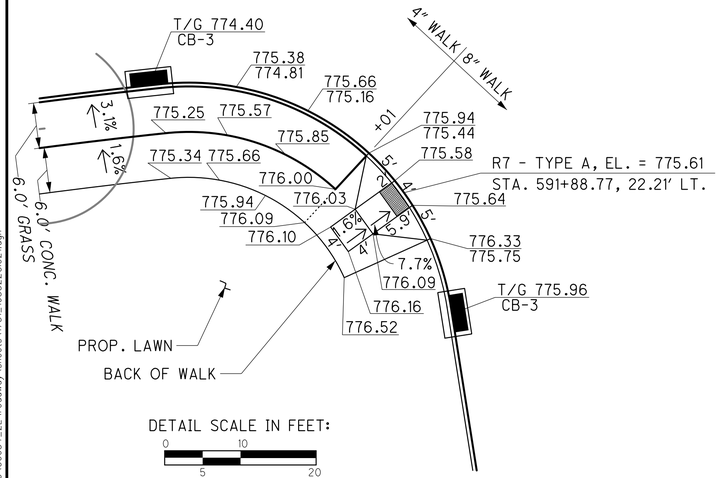

DETAIL SCALE IN FEET:
0 10
5 20

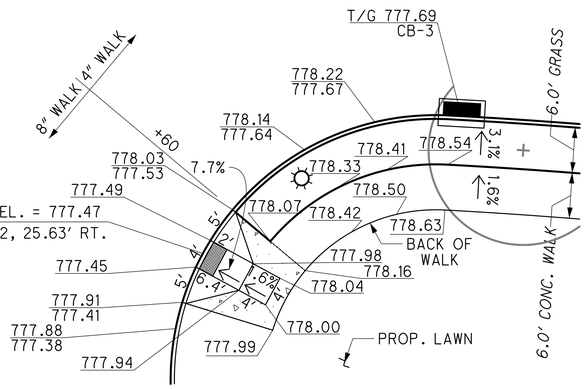

DETAIL SCALE IN FEET:
0 10
5 20

0 0.5" 1"

HORIZONTAL SCALE IN FEET
0 20 40

CALCULATED DJK
CHECKED SPK

INTERSECTION & CURB RAMP DETAILS
MOOBERRY ST. AT CHILDRENS DR.

FRA-70-14.54

1089
2317

ms consultants, inc.

PLOT.CEL
ms consultants, inc.
msconsultants.com
www.msconsultants.com
Ohio DOT Workspace
70\71 East Interchange 2E
DGN: ohdot\V8i
PCF: 60-06634_2E_Columbus
1" 0.5" 0
Batchplot Spec: \\msconsultants.com\Files\production\03\60\06634_2E\standards\plotdrv\batchplt.spc
Pen Table: N:\03\60\06634_2E\standards\tables\V8i_ms_std_06634_2D_Plan View.tbl
Plot Driver: \\msconsultants.com\Files\Standards\ustn\ohdot\v8i\ms\plotting\PDF.pltcfg
34" x 22"
View: FENCE_VIEW1
By: jdouglas
Model: Sheet
Printed: 6/19/2018 @ 9:01:11 AM
File: N:\03\60\06634_2E\roadway\sheets\1752_105322G022.dgn

EXISTING UTILITY DISPOSITION
ALL SURFACE UTILITY OBJECTS SHALL BE ADJUSTED TO GRADE AS NEEDED. SEE PLAN SHEET INDEX (SHEET 903) FOR EXISTING UTILITY SYMBOLS.

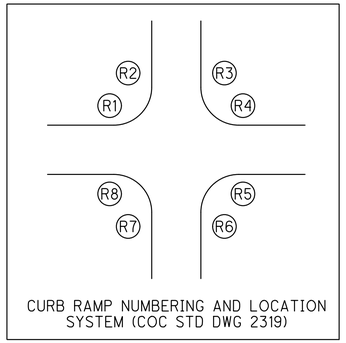

CURB RAMP NUMBERING AND LOCATION SYSTEM (COC STD DWG 2319)

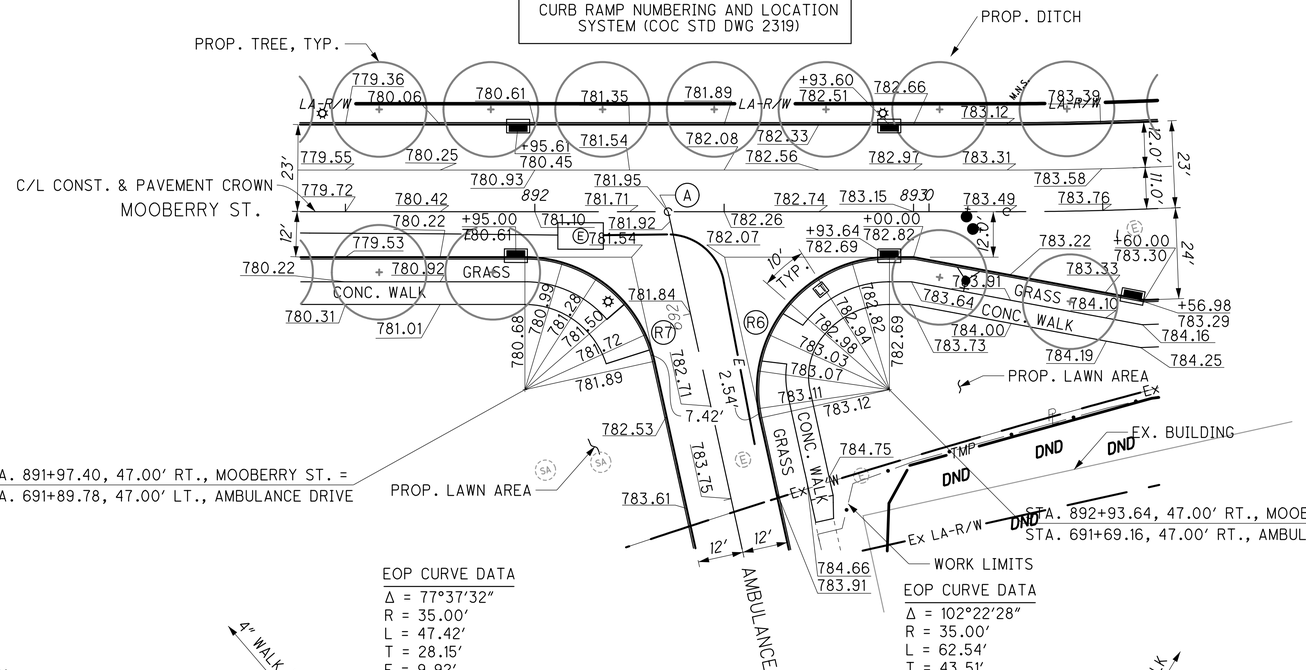

- TRUNCATED DOMES
- CATCH BASIN
- MAN HOLE
- SIGNAL POLE
- SIGNAL CONTROLLER
- ELEVATION IS INTERPOLATED BETWEEN EXISTING ELEVATION POINTS. CONTRACTOR TO VERIFY AND MATCH EXISTING ELEVATION.

789.50 - TOP OF CURB ELEVATION
789.00 - EDGE OF PAVEMENT ELEVATION
(789.00) - EXISTING ELEVATION
789.00 - PROPOSED ELEVATION
NOTE: ALL RADIUS ELEVATIONS ARE EDGE OF PAVEMENT ELEVATIONS
T/G - TOP OF GRATE ELEVATION

EOP CURVE DATA
Δ = 77°37'32"
R = 35.00'
L = 47.42'
T = 28.15'
E = 9.92'
AF = 155.547 SQ. FT.

EOP CURVE DATA
Δ = 102°22'28"
R = 35.00'
L = 62.54'
T = 43.51'
E = 20.84'
AF = 428.5 SQ. FT.

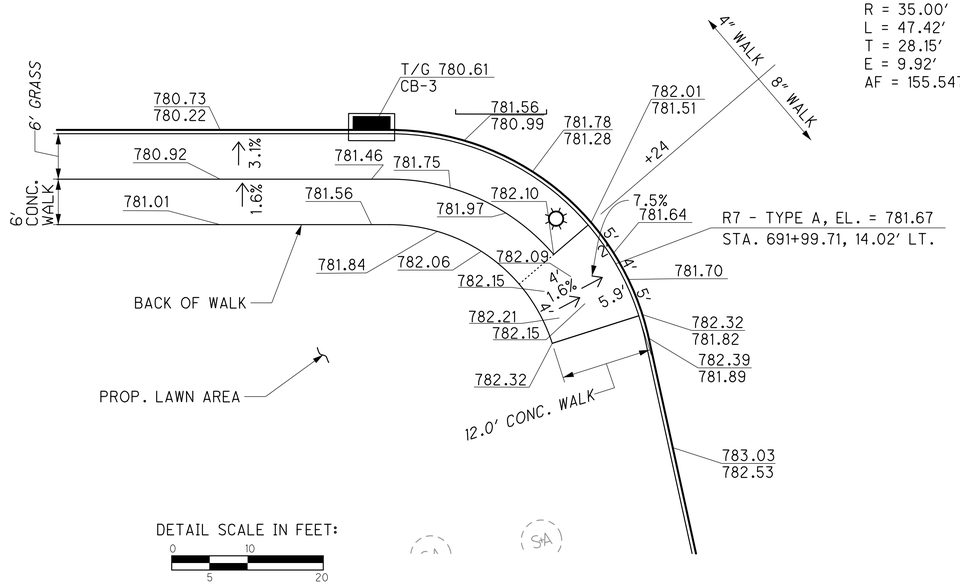

MOOBERRY ST. AT AMBULANCE DR.

(A) STA 892+35.21, ℄ MOOBERRY ST. = STA 692+27.59, ℄ AMBULANCE DR.

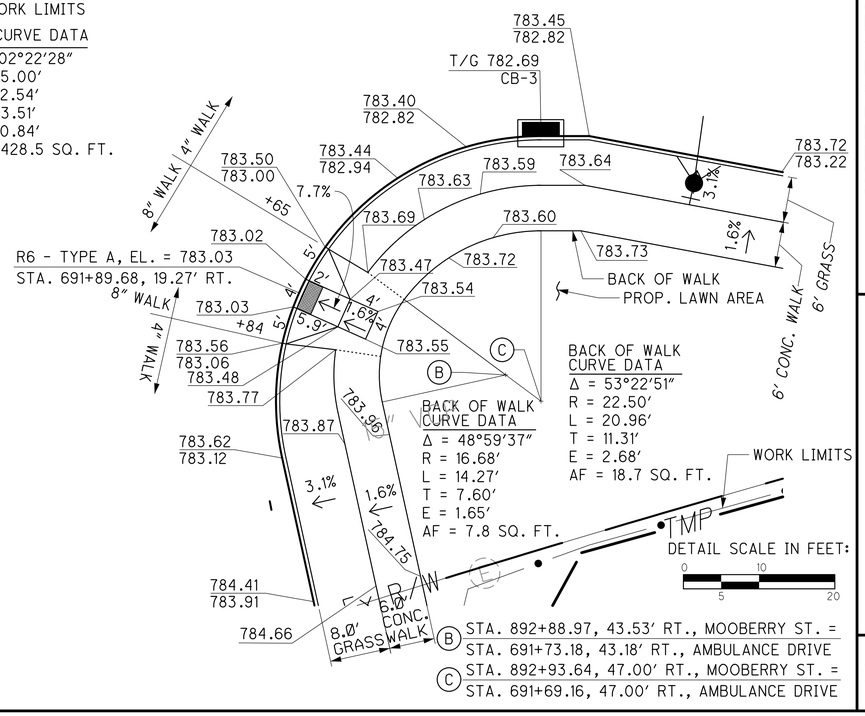

(B) STA. 892+88.97, 43.53' RT., MOOBERRY ST. = STA. 691+73.18, 43.18' RT., AMBULANCE DRIVE
(C) STA. 892+93.64, 47.00' RT., MOOBERRY ST. = STA. 691+69.16, 47.00' RT., AMBULANCE DRIVE

HORIZONTAL SCALE IN FEET
0 10 20 40
CALCULATED DJK
CHECKED SPK

INTERSECTION & CURB RAMP DETAILS MOOBERRY ST. AT AMBULANCE DR.

FRA-70-14.54

1090
2317

ms consultants, inc.

PLOT.CEL
ms consultants, inc.
msconsultants.com
www.msconsultants.com
Ohio DOT Workspace
70\71 East Interchange 2E
PDF: ohdot\V8i
PCF: 60-06634_2E_Columbus
Batchplot Spec: \\msconsultants.com\files\production\03\60\06634_2E\standards\plotdrv\batchplt.spc
Pen Table: N:\03\60\06634_2E\standards\tables\V8i_ms_std_06634_2D_Plan View.tbl
Plot Driver: \\msconsultants.com\files\Standards\ustn\ohdot\v8i\ms\plotting\PDF.pltcfg
Model: Sheet
Printed: 7/31/2018 @ 11:49:14 AM
File: N:\03\60\06634_2E\roadway\sheets\1753_1053220024.dgn
View: FENCE_VIEW1
By: jdoughas
34" x 22"

EXISTING UTILITY DISPOSITION
ALL SURFACE UTILITY OBJECTS SHALL BE ADJUSTED TO GRADE AS NEEDED. SEE PLAN SHEET INDEX (SHEET 903) FOR EXISTING UTILITY SYMBOLS.

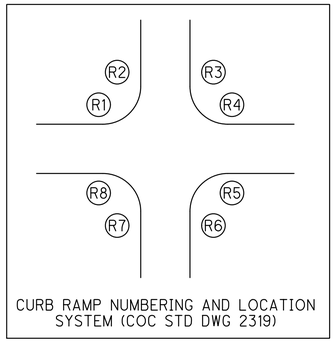

CURB RAMP NUMBERING AND LOCATION SYSTEM (COC STD DWG 2319)

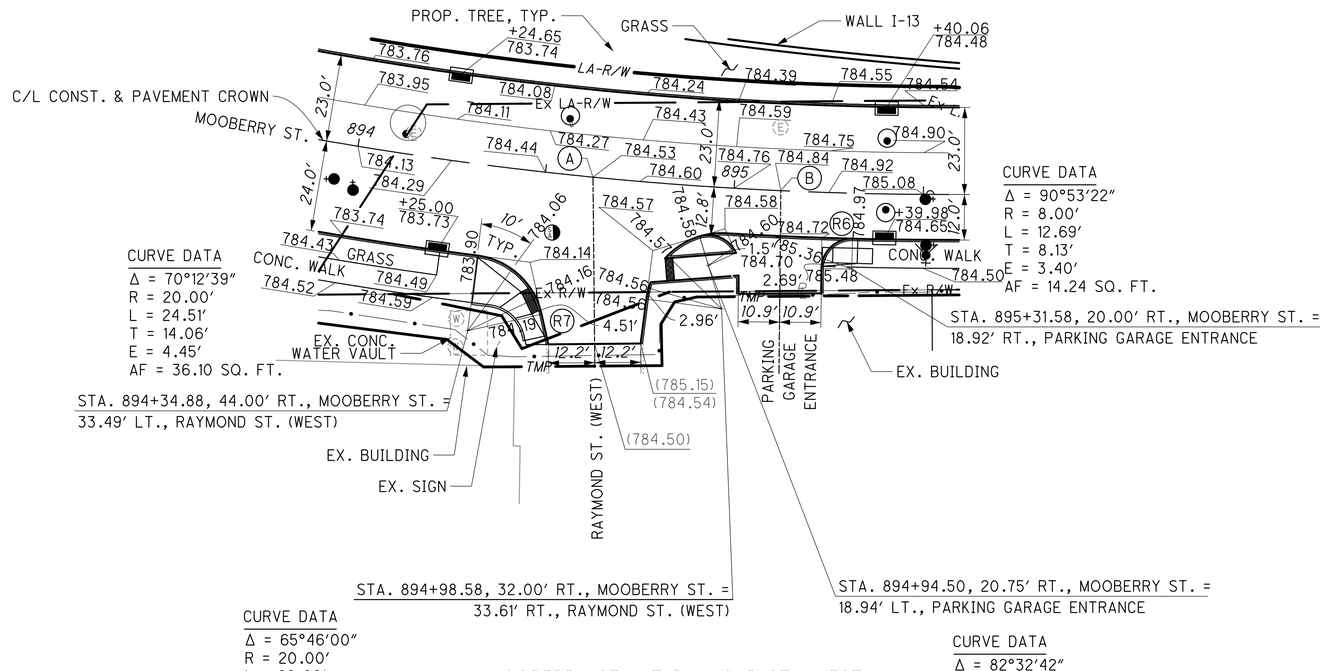

MOOBERRY ST. AT RAYMOND ST. (WEST)

Ⓐ STA 894+62.60, ℄ MOOBERRY ST. = ℄ RAYMOND ST. (WEST)

Ⓑ STA 895+12.33, ℄ MOOBERRY ST. = ℄ PARKING GARAGE ENTRANCE

- TRUNCATED DOMES
- CATCH BASIN
- MAN HOLE
- SIGNAL POLE
- SIGNAL CONTROLLER
- * - ELEVATION IS INTERPOLATED BETWEEN EXISTING ELEVATION POINTS. CONTRACTOR TO VERIFY AND MATCH EXISTING ELEVATION.

789.50 / 789.00 - TOP OF CURB ELEVATION
789.50 / 789.00 - EDGE OF PAVEMENT ELEVATION
(789.00) - EXISTING ELEVATION
789.00 - PROPOSED ELEVATION
NOTE: ALL RADIUS ELEVATIONS ARE EDGE OF PAVEMENT ELEVATIONS
T/G - TOP OF GRATE ELEVATION

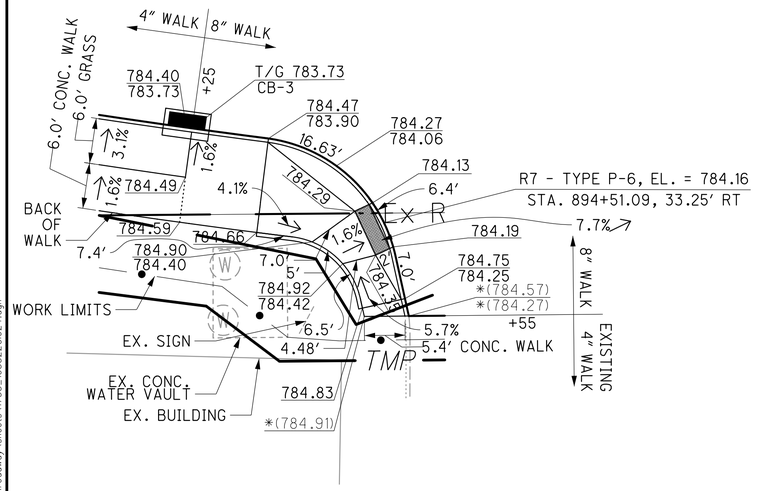

DETAIL SCALE IN FEET:
0 10
5 20

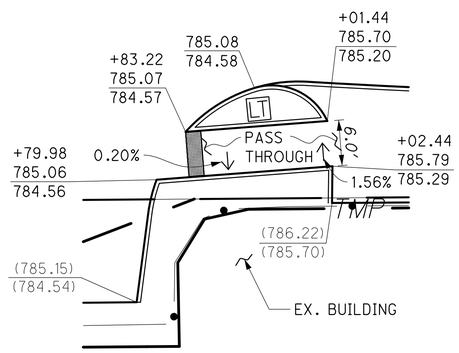

DETAIL SCALE IN FEET:
0 10
5 20

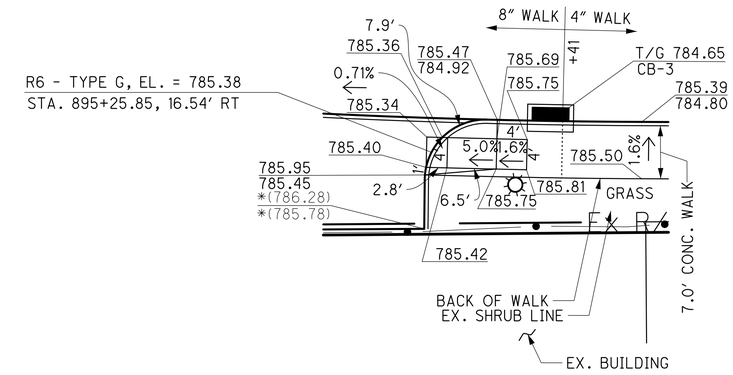

DETAIL SCALE IN FEET:
0 10
5 20

HORIZONTAL SCALE IN FEET
0 20 40
0 5 10

CALCULATED DJK
CHECKED SPK

INTERSECTION & CURB RAMP DETAILS
MOOBERRY ST. AT RAYMOND ST. (WEST)

FRA-70-14.54

1091
2317

ms consultants, inc.

PLOT.CEL
ms consultants, inc.
msconsultants.com
www.msconsultants.com
Ohio DOT Workspace
70\71 East Interchange 2E
DF: ohdot\V8i
PCF: 60-06634_2E_Columbus
Batchplot Spec: \\msconsultants.com\Files\production\03\60\06634_2E\standards\plotdrv\batchplt.spc
Pen Table: N:\03\60\06634_2E\standards\tables\V8i_ms_std_06634_2D_Plan View.tbl
Plot Driver: \\msconsultants.com\Files\Standards\usetn\ohdot\v8i\ms\plotting\PDF.pltdrv
Model: Sheet
Printed: 7/31/2018 @ 11:49:21 AM
By: jdougtas
View: FENCE_VIEW1
File: N:\03\60\06634_2E\roadway\sheets\1754_105220025.dgn
34" x 22"

EXISTING UTILITY DISPOSITION
ALL SURFACE UTILITY OBJECTS SHALL BE ADJUSTED TO GRADE AS NEEDED. SEE PLAN SHEET INDEX (SHEET 903) FOR EXISTING UTILITY SYMBOLS.

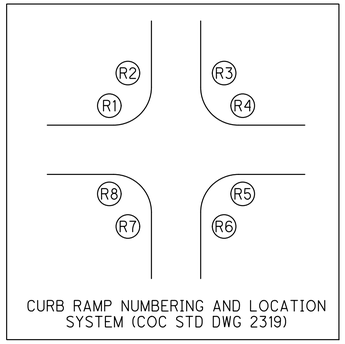

CURB RAMP NUMBERING AND LOCATION SYSTEM (COC STD DWG 2319)

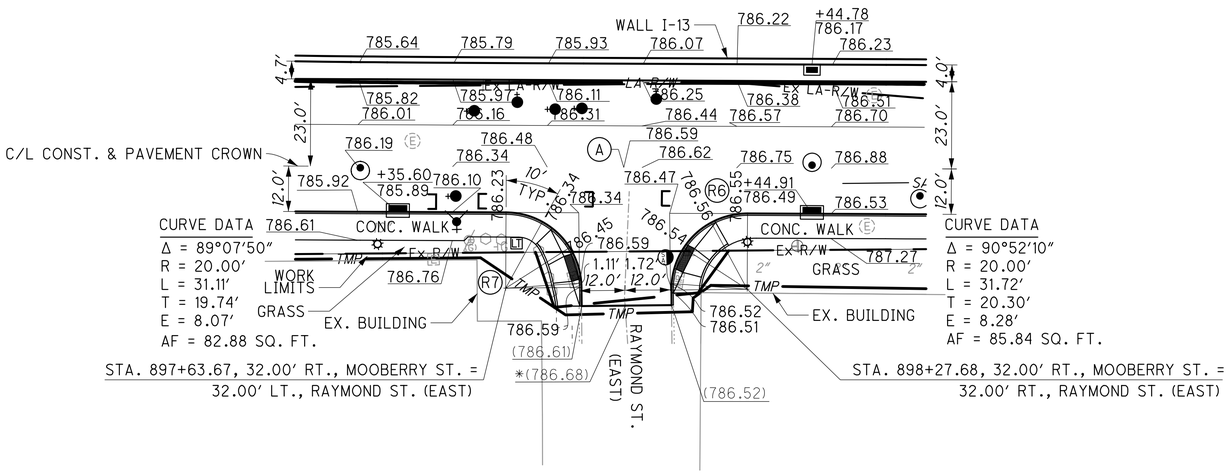

MOOBERRY ST. AT RAYMOND ST. (EAST)

(A) STA 888+95.19, ℄ MOOBERRY ST. = ℄ RAYMOND ST. (EAST)

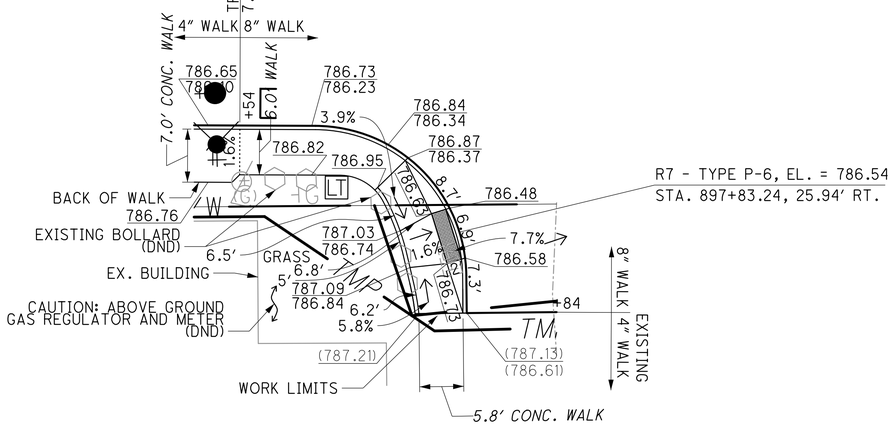

DETAIL SCALE IN FEET:
0 10
5 20

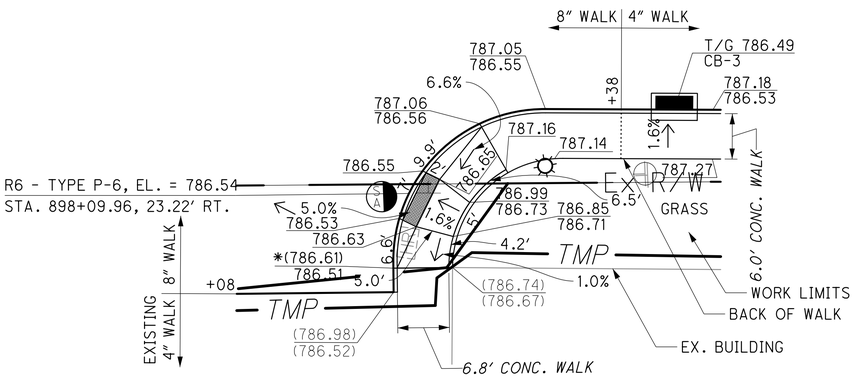

DETAIL SCALE IN FEET:
0 10
5 20

- TRUNCATED DOMES
- CATCH BASIN
- MAN HOLE
- SIGNAL POLE
- SIGNAL CONTROLLER
- ELEVATION IS INTERPOLATED BETWEEN EXISTING ELEVATION POINTS. CONTRACTOR TO VERIFY AND MATCH EXISTING ELEVATION.

789.50 TOP OF CURB ELEVATION
789.00 EDGE OF PAVEMENT ELEVATION

(789.00) - EXISTING ELEVATION
789.00 - PROPOSED ELEVATION

NOTE: ALL RADIUS ELEVATIONS ARE EDGE OF PAVEMENT ELEVATIONS

T/G - TOP OF GRATE ELEVATION

HORIZONTAL SCALE IN FEET
0 20 40
0105

CALCULATED DJK
CHECKED SPK

INTERSECTION & CURB RAMP DETAILS MOOBERRY ST. AT RAYMOND ST. (EAST)

FRA-70-14.54

1092
2317

ms consultants, inc.

PLOT.CEL

ms consultants, inc.
msconsultants.com

www.msconsultants.com

Ohio DOT Workspace
70\71 East Interchange 2E

PDF: ohdotV8i
PCF: 60-06634_2E_Columbus

34" x 22"

Batchplot Spec: \\msconsultants.com\files\production\03\60\06634_2E\standards\plotdrv\batchplt.spc
Pen Table: N:\03\60\06634_2E\standards\tables\V8i_ms_std_06634_2D_Plan View.tbl
Plot Driver: \\msconsultants.com\files\Standards\ustn\ohdot\v8i\ms\plotting\PDF.pltcfg
View: FENCE_VIEW1
By: jdoughas
Model: Sheet @ 11:49:25 AM
Printed: 7/31/2018
File: N:\03\60\06634_2E\roadway\sheets\1755_1053220026.dgn

EXISTING UTILITY DISPOSITION
ALL SURFACE UTILITY OBJECTS SHALL BE ADJUSTED TO GRADE AS NEEDED. SEE PLAN SHEET INDEX (SHEET 903) FOR EXISTING UTILITY SYMBOLS.

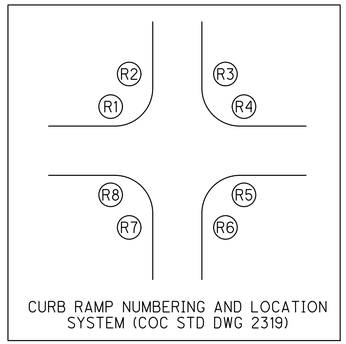

CURB RAMP NUMBERING AND LOCATION SYSTEM (COC STD DWG 2319)

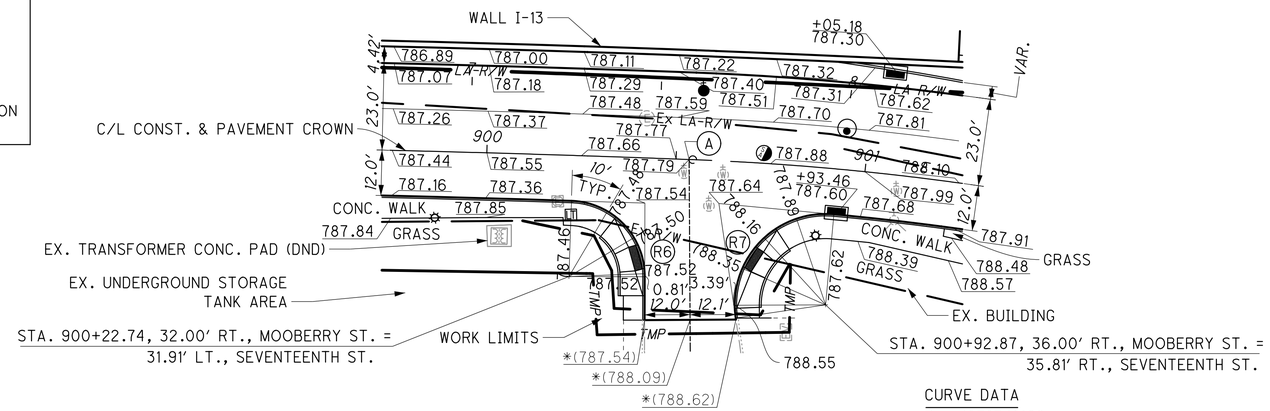

CURVE DATA
Δ = 88°15'49"
R = 20.00'
L = 30.81'
T = 19.40'
E = 7.87'
AF = 79.96 SQ. FT.

CURVE DATA
Δ = 103°34'46"
R = 24.00'
L = 43.39'
T = 30.49'
E = 14.80'
AF = 211.05 SQ. FT.

- TRUNCATED DOMES
- CATCH BASIN
- MAN HOLE
- SIGNAL POLE
- SIGNAL CONTROLLER
- ELEVATION IS INTERPOLATED BETWEEN EXISTING ELEVATION POINTS. CONTRACTOR TO VERIFY AND MATCH EXISTING ELEVATION.

789.50 — TOP OF CURB ELEVATION
789.00 — EDGE OF PAVEMENT ELEVATION
(789.00) - EXISTING ELEVATION
789.00 - PROPOSED ELEVATION
NOTE: ALL RADIUS ELEVATIONS ARE EDGE OF PAVEMENT ELEVATIONS
T/G - TOP OF GRATE ELEVATION

MOOBERRY ST. AT SEVENTEENTH ST.

(A) STA 900+53.45, ℄ MOOBERRY ST. = ℄ SEVENTEENTH AVE.

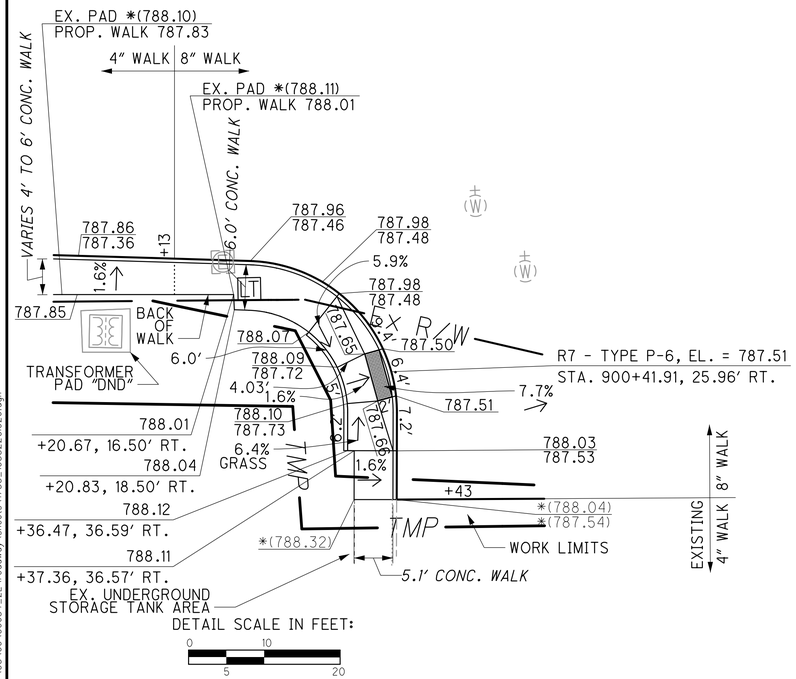

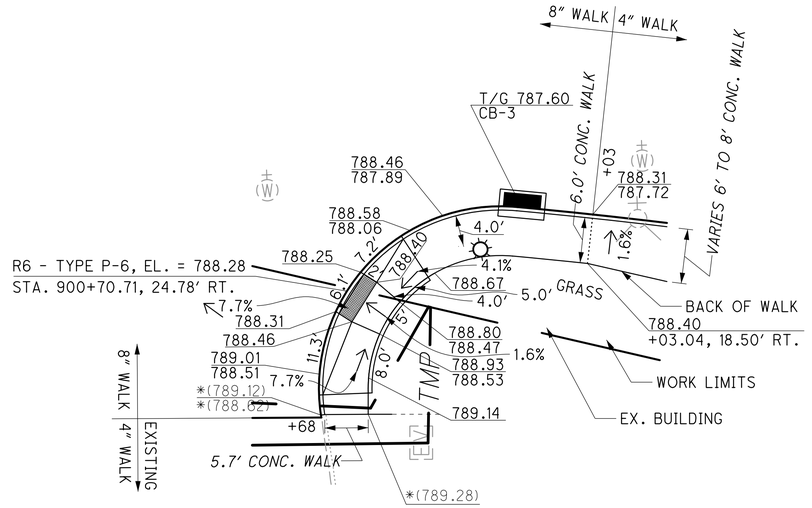

CALCULATED DJK
CHECKED SPK

INTERSECTION & CURB RAMP DETAILS
MOOBERRY ST. AT SEVENTEENTH ST.

FRA-70-14.54

1093
2317

PLOT.CEL
ms consultants, inc.
msconsultants.com
www.msconsultants.com
Ohio DOT Workspace
70\71 East Interchange 2E
PDF: ohdot\V8i
PCF: 60-06634_2E_Columbus
Batchplot Spec: \\msconsultants.com\files\production\03\60\06634_2E\standards\plotdr\batchplt.SSS
Pen Table: N:\03\60\06634_01\standards\tables\V8i_ms_std_06634_2D_Plan View.tbl
Plot Driver: \\msconsultants.com\files\Standards\usetn\ohdot\v8i\ms\plotting\PDF.pltcfg
Model: Sheet
Printed: 8/27/2018 @ 8:47:32 AM
File: \\msconsultants.com\files\Production\03\60\06634_2E\roadway\sheets\1053220037.dgn
View: SHEET
By: jdouglas
34" x 22"

EXISTING UTILITY DISPOSITION

ALL SURFACE UTILITY OBJECTS SHALL BE ADJUSTED TO GRADE AS NEEDED. SEE PLAN SHEET INDEX (SHEET 579) FOR EXISTING UTILITY SYMBOLS.

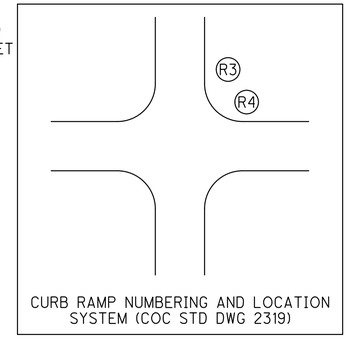

CURB RAMP NUMBERING AND LOCATION SYSTEM (COC STD DWG 2319)

BACK OF WALK
CURVE DATA
Δ = 90°05'46"
R = 5.50'
L = 8.65'
T = 5.51'
E = 2.28'
AF = 6.517 SQ. FT.

R3 - TYPE A, EL. = 764.73
STA. 157+75.90, 23.74' RT.

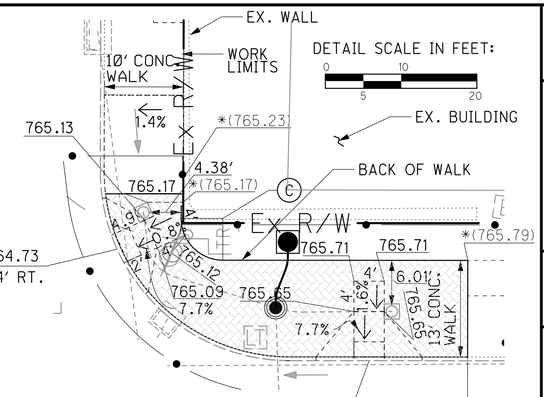

R4 - TYPE A, EL. = 765.15
STA. 60+57.00, 13.00' LT.

(C) STA. 60+37.69, 31.76' LT., E. FULTON ST. =
STA. 157+79.96, 37.70' RT., S. GRANT AVE.

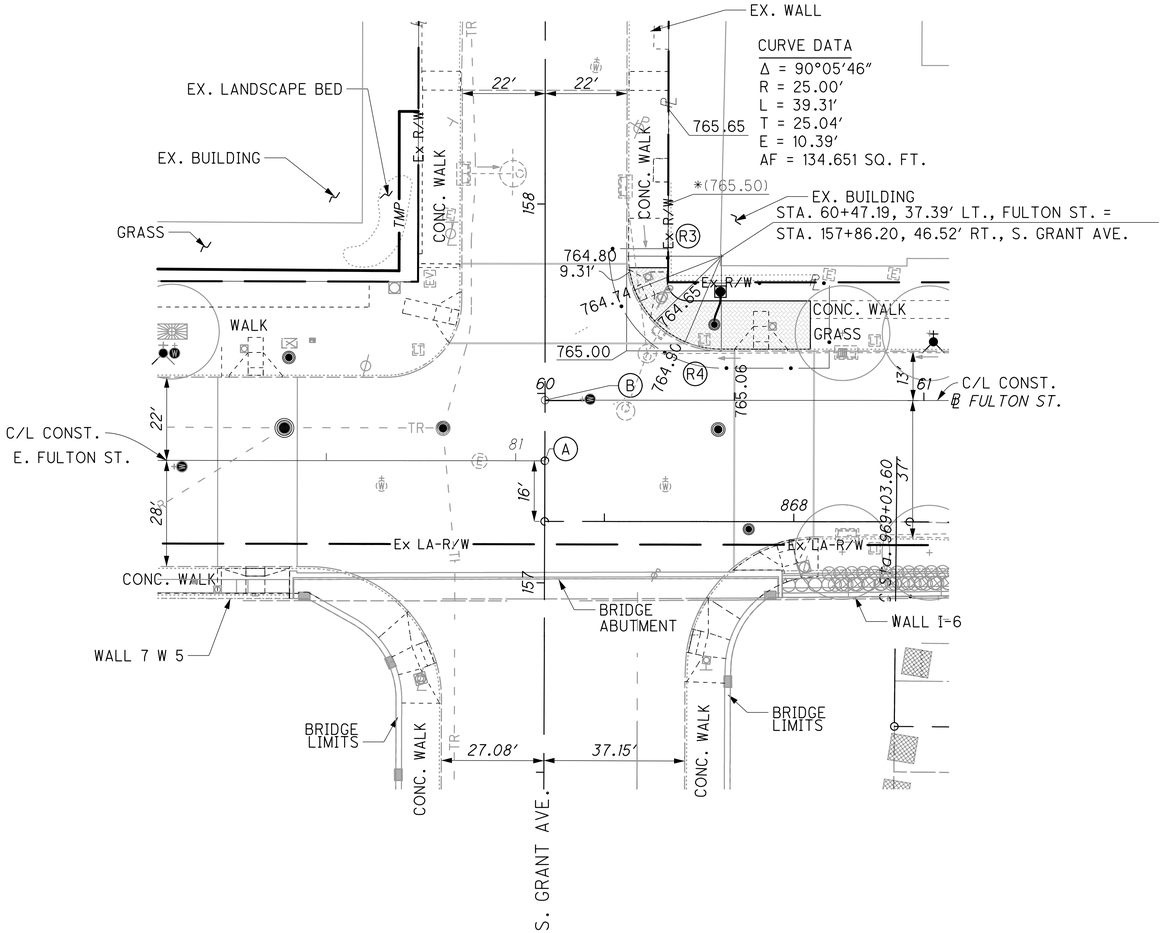

E. FULTON ST. AT S. GRANT AVE.

(A) STA 81+7.69, ℄ FULTON ST. =
STA 157+32.22, ℄ GRANT AVE.

(B) STA 60+00.00, ℄ FULTON ST. =
STA 157+48.13, ℄ GRANT AVE.

- TRUNCATED DOMES
- CATCH BASIN
- MAN HOLE
- SIGNAL POLE
- SIGNAL CONTROLLER
- * - ELEVATION IS INTERPOLATED BETWEEN EXISTING ELEVATION POINTS. CONTRACTOR TO VERIFY AND MATCH EXISTING ELEVATION.

TOP OF CURB ELEVATION
789.50
789.00
EDGE OF PAVEMENT ELEVATION

(789.00) - EXISTING ELEVATION
789.00 - PROPOSED ELEVATION
NOTE: ALL RADIUS ELEVATIONS ARE EDGE OF PAVEMENT ELEVATIONS
T/G - TOP OF GRATE ELEVATION

HORIZONTAL SCALE IN FEET
0 10 20 40

CALCULATED DJK
CHECKED SPK

INTERSECTION & CURB RAMP DETAILS
E. FULTON ST. AT S. GRANT AVE.

FRA-70-14.54

1094
2317

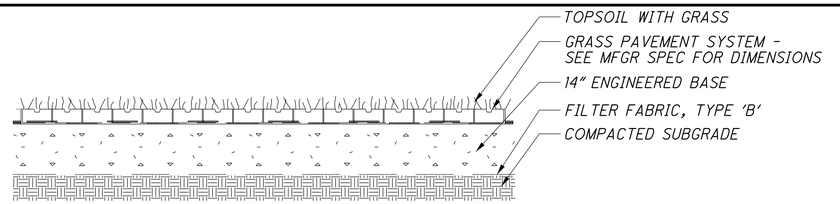

SECTION

NTS

ENGINEERED BASE:

ENGINEERED BASE SHALL CONSIST OF A HOMOGENEOUS MIXTURE OF 1) CLEAR CRUSHED STONE HAVING AN AASHTO #5 OR SIMILAR DESIGNATION BLENDED WITH 2) PULVERIZED TOPSOIL AND 3) VOID COMPONENT GENERALLY CONTAINING AIR AND/OR WATER. THIS HOMOGENOUS MIXTURE WILL PROMOTE VEGETATIVE GROWTH AND PROVIDE STRUCTURAL SUPPORT.

THE AGGREGATE PORTION SHALL HAVE A PARTICLE RANGE FROM 0.375 TO 1.0 IN WITH A D50 OF 0.5 IN. THE PERCENTAGE VOID SPACE AFTER COMPACTION SHALL BE AT LEAST 30%. THE PULVERIZED TOPSOIL SHALL EQUAL 25% OF THE TOTAL VOLUME AND BE ADDED AND BLENDED TO PRODUCE A HOMOGENEOUS MIXTURE PRIOR TO PLACEMENT. ONCE PLACED, THE MIXTURE SHALL BE COMPACTED TO 95% STANDARD PROCTOR.

GRASS PAVEMENT SYSTEM

NTS

CALCULATED

CHECKED

DECORATIVE GATE AND GRASS PAVEMENT DETAIL AND LANDSCAPE BED LAYOUT AT NE CORNER OF PARSONS/MAIN

FRA-70-14.54

1101
2317

PLOT.CEL
ms consultants, inc.
msconsultants.com
Ohio DOT Workspace
70\71 East Interchange 2E
www.msconsultants.com
Batchplot Spec: \\msconsultants.com\files\production\03\60\06634_2E\standards\plotdrv\batchplt.spec
Pen Table: \\msconsultants.com\files\Standards\ustn\ohdot\V8i\ms\plotting\pen\V8i_ms_std.tbl
Plot Driver: \\msconsultants.com\files\Standards\ustn\ohdot\v8i\ms\plotting\PDF.pltcfg
PCF: ohdotV8i
PCF: 60-06634_2E_Columbus
34" x 22"
Model: Sheet
Printed: 6/19/2018 @ 9:01:41 AM
File: N:\03\60\06634_2E\roadway\sheets\105322GM002.dgn
View: FENCE_VIEW1
By: jdougas
ms consultants, inc.

PLOT.CEL
ms consultants, inc.
rmsconsultants.com
www.rmsconsultants.com
Ohio DOT Workspace
70\71 East Interchange 2E
PDF: ohdot\V8i
DGN: 60-06634_2E_Columbus
Batchplot Spec: \\rmsconsultants.com\files\production\03\60\06634_2E\standards\plotdir\batchplt.spc
Pen Table: \\rmsconsultants.com\files\Standards\ustn\ohdot\V8i\rms\plotting\pen\V8i_ms_std.tbl
Plot Driver: \\rmsconsultants.com\files\Standards\ustn\ohdot\v8i\rms\plotting\PDF.pltcfg
Model: Sheet
Printed: 6/19/2018 @ 9:01:43 AM
File: N:\03\60\06634_2E\roadway\sheets\105322GM003.dgn
View: FENCE_VIEW1
By: jdouglas
34" x 22"

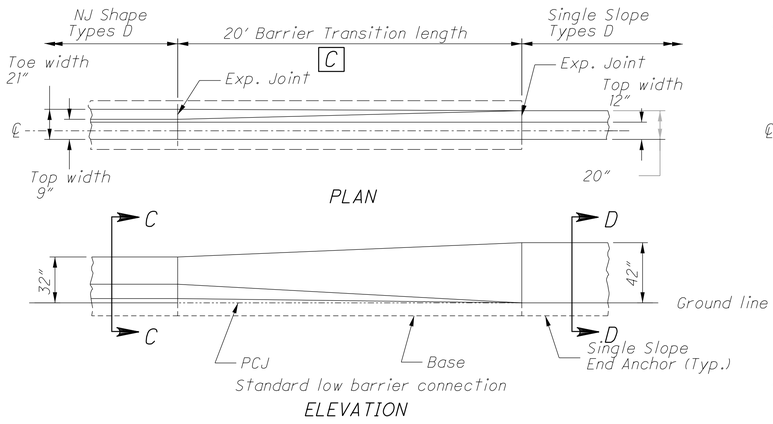

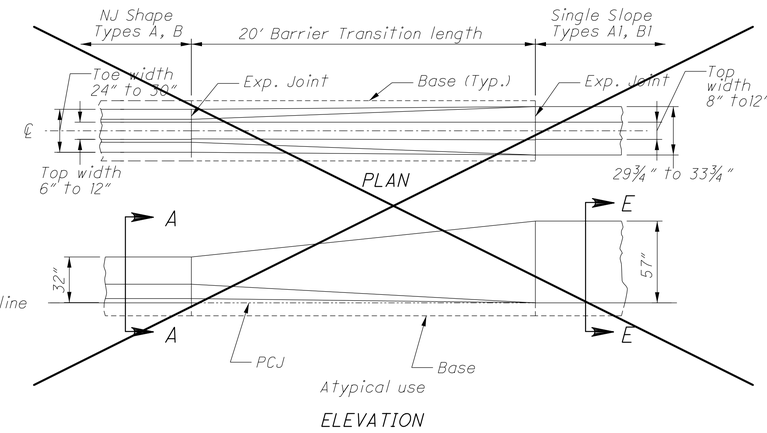

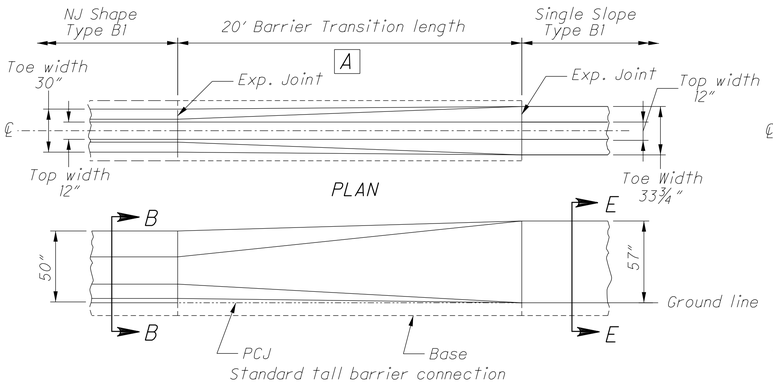

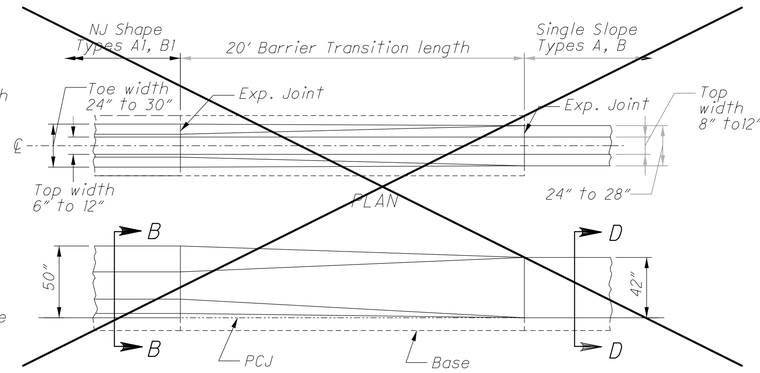

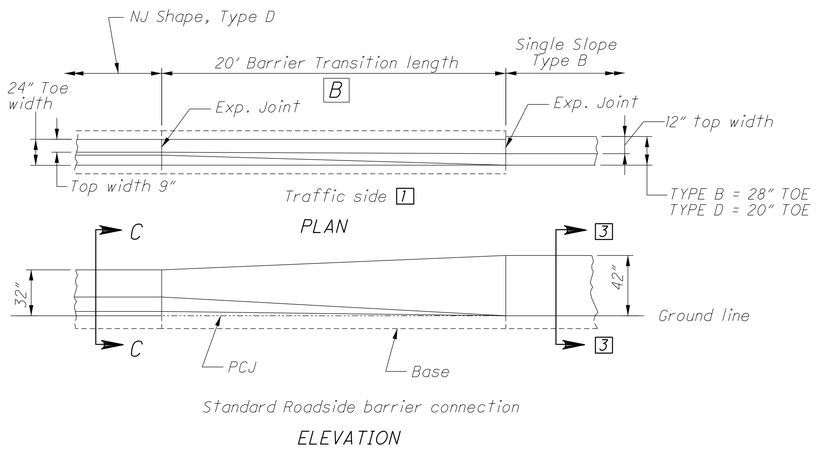

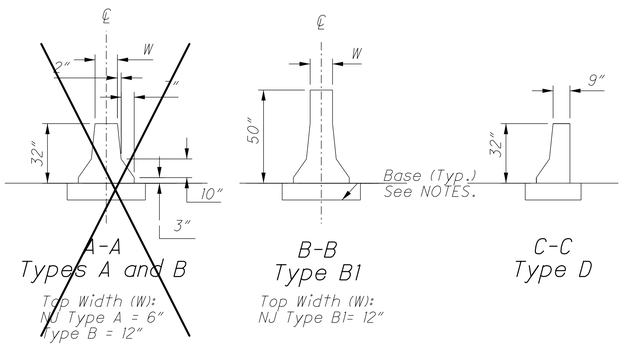

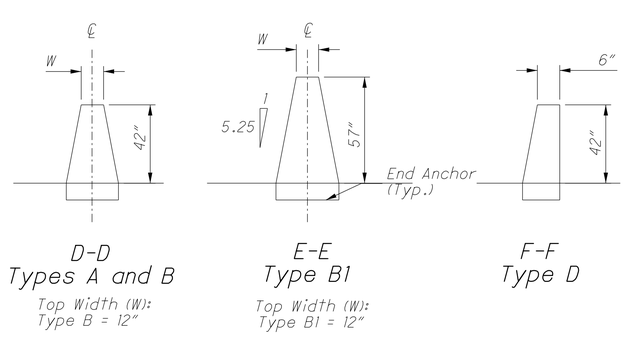

NOTES

GENERAL: This insert details the Barrier Transition, to connect existing NJ Concrete Barrier (safety shape) to a new run of Single Slope Concrete Barrier at locations shown on the plans. For NJ barrier shape and other details see the respective plan insert sheets. For Single Slope barrier details, see SCD RM-4.3 (RM-4.5 for Type D).

ADJACENT CONCRETE BARRIER RUNS: Remove any tapered end sections, Impact attenuators, or other guardrail hardware from existing barrier end. The barrier to barrier transition is not intended to be used at transition sections (those shown on SCD RM-4.4), Inlets, or on Type C or C1 Barrier. If proposed adjacent single slope barrier is Type A or A1, the Barrier Transition should contain horizontal reinforcing steel similiar to that required in the respective single slope barrier. Reinforcement is not shown and should be detailed separately. The adjacent single slope end should be terminated with a reinforced End Anchor as detailed on the SCDs.

BARRIER FACE TRANSITION: To prevent vehicle snagging, a smooth transition from the safety shape face to the single slope face is made over a 20' length. The actual shape of the Transition is dependent on both the adjacent NJ barrier and the single slope barrier Types, as detailed on the plans. The contractor and Engineer will agree on a construction method to ensure a smooth barrier face.

MATERIALS: Materials are same for those shown on RM-4.3 and RM-4.5, except that cast-in-place is the only acceptable method. Edges may be chamfered or radiused as shown on those drawings.

CONCRETE BASE: Construct base as shown on the NJ shape insert sheets, including the methods detailing the footing joint, Permissible Construction Joint (PCJ), and Dowelling requirements. The width of the base matches the existing NJ barrier.

JOINTS: Construct joints as shown on respective barrier drawings.

RACEWAYS: When specified, place raceway(s) to match raceway elevation in adjoining segments. Place to obtain maximum concrete cover.

METRIC UNITS: Refer to respective barrier drawings or inserts for metric dimensions.

PAYMENT: This Barrier Transition shall include all material and labor needed to construct this sections, including any raceways, reinforcing steel, dowels and other necessary incidentals. Payment shall be made at the unit price for Item 622 - Barrier Transition, Each.

1 TRAFFIC SIDE, TRANSITION SINGLE SLOPE BARRIER FACE TO NJ BARRIER FACE. RETAINING WALL SIDE, TRANSITION FROM SINGLE SLOPE BARRIER FACE TO VERTICAL FACE OF BACK SIDE OF NJ BARRIER.

3 DD = SEE B1
FF = SEE B2

C BARRIER TRANSITION OCCURS AT THE FOLLOWING LOCATIONS:
1. TRANS. I-71 SB (E) STA. 214+56.80 TO STA. 214+77.16 LT

A BARRIER TRANSITION OCCURS AT THE FOLLOWING LOCATIONS:
1. TRANS. I-70 EB STA. 857+00.00 TO STA. 857+20.00 LT
2. TRANS. I-70 EB STA. 218+58.12 TO STA. 218+78.17 LT

B BARRIER TRANSITION OCCURS AT THE FOLLOWING LOCATIONS:
1. TRANS. I-70 EB STA. 858+50.00 TO STA. 858+69.85 RT

NJ SHAPE SECTIONS
See Plan Insert sheets for specific NJ Shape Concrete barrier details.

SINGLE SLOPE SECTIONS
See SCD RM-4.3 and RM-4.5 for specific Single Slope concrete barrier details.

OFFICE OF ROADWAY ENGINEERING
DESIGNED | REVIEWED
REVISION DATE | CHECKED
PID NUMBER

PLAN INSERT SHEET
NJ SHAPE TO SINGLE SLOPE BARRIER TRANSITION

FRA-70-14.54

1102
2317

ms consultants, inc.

PLOT.CEL
ms consultants, inc.
msconsultants.com
www.msconsultants.com
Ohio DOT Workspace
70\71 East Interchange 2E
PDF: ohdotV8i
DGN: 60-06634_2E_Columbus
Batchplot Spec: \\msconsultants.com\Files\Production\03\60\06634_2E\standards\plotdrv\batchplt.spc
Pen Table: \\msconsultants.com\Files\Standards\usitn\ohdot\V8i\ms\plotting\pen\V8i_ms_std.tbl
Plot Driver: \\msconsultants.com\Files\Standards\usitn\ohdot\v8i\ms\plotting\PDF.pltcfg
Model: Sheet
Printed: 6/19/2018 @ 9:01:44 AM
File: N:\03\60\06634_2E\roadway\sheets\105322GM004.dgn
View: FENCE_VIEW1
By: jdouglas
34" x 22"

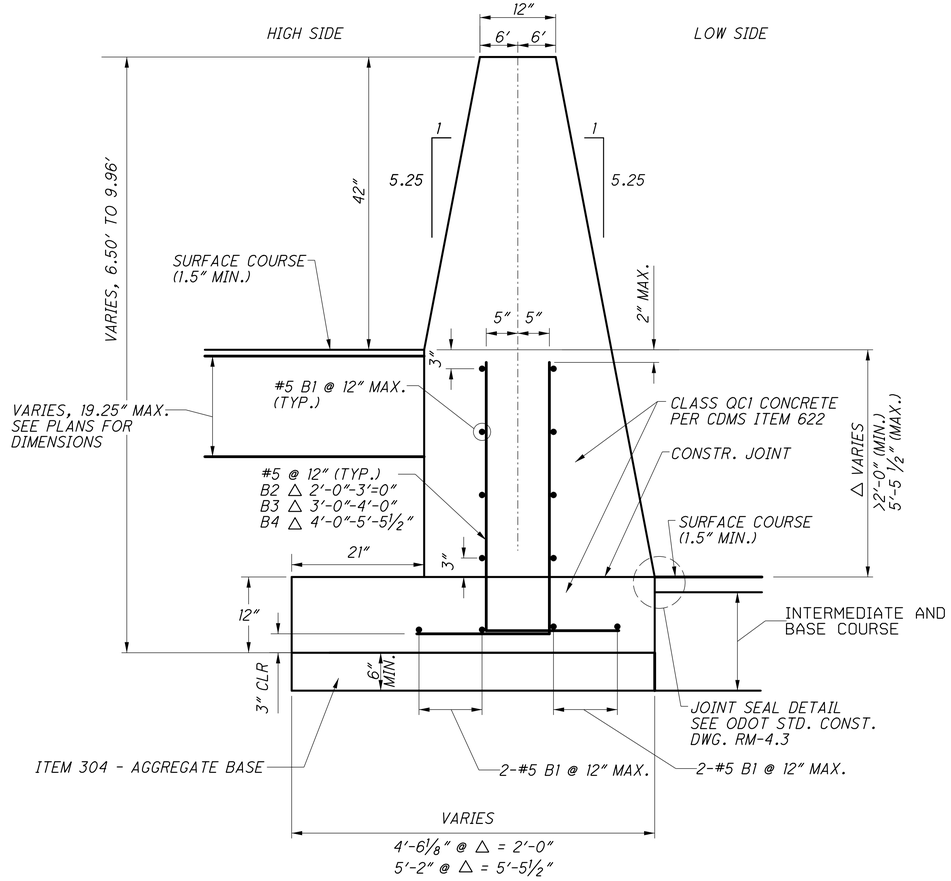

CONCRETE BARRIER, SINGLE SLOPE TYPE C, AS PER PLAN "B"

ITEM 622
GRADE DIFFERENCE: △ >2′-0″ (MIN.) TO 5′-5½″ (MAX.)
NOT TO SCALE

MEDIAN BARRIER REINFORCING						
BAR MARK	* No.	SIZE	TYPE	LENGTH	DIMENSIONS A	DIMENSIONS B
B1	*	5	6	*	-	-
B2	*	5	6	5′-4″	3′-7″	1′-9″
B3	*	5	6	6′-9″	4′-9″	2′-0″
B4	*	5	6	8′-6″	6′-6″	2′-0″

* AS DETERMINED BY THE PROJECT ENGINEER.

NOTE:
#5 BARS TO BE EPOXY COATED.

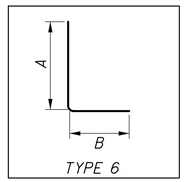

TYPE 6

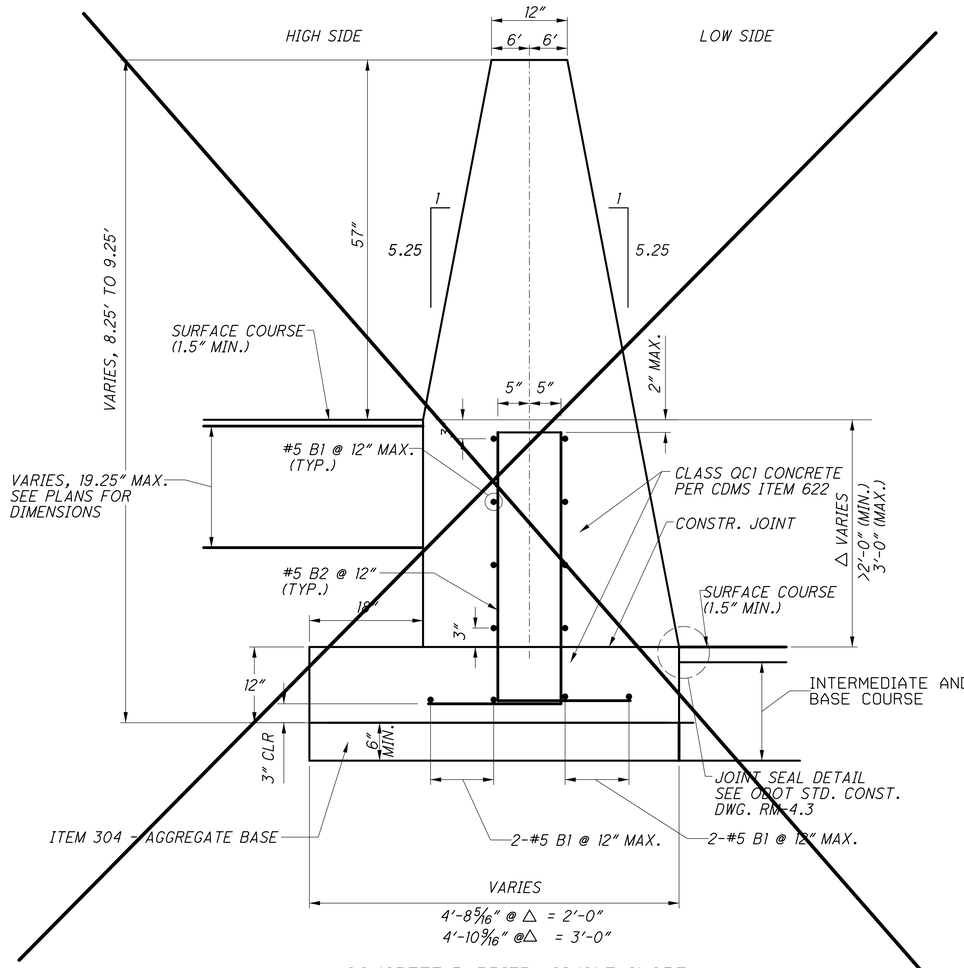

CONCRETE BARRIER, SINGLE SLOPE, TYPE C1, AS PER PLAN

ITEM 622
GRADE DIFFERENCE: △ > 2′-0″ (MIN.) TO 3′-0″ (MAX.)
NOT TO SCALE

EXPANSION AND CONTRACTION JOINTS

TYPE C AND TYPE C1 BARRIERS, AS PER PLAN, SHALL BE CONSTRUCTED WITH EXPANSION JOINTS AT THE END OF EACH SLIP FORM RUN AND CONTRACTION JOINTS AT MAX. 20 FT SPACING.

AFTER MEDIAN BARRIER IS CONSTRUCTED, DO NOT UNDERMINE OR DISTURB PROPERLY COMPACTED MATERIAL BELOW BARRIER

NOTE:

ITEM 622 - SINGLE SLOPE BARRIER, TYPE C AND TYPE C1, AS PER PLAN SHALL BE PLACED IN LOCATIONS SHOWN ON PLAN SHEETS AND TYPICAL SECTIONS SHEETS.

ITEM 304 - AGGREGATE BASE, AND SUBGRADE COMPACTION SHALL BE INCLUDED FOR PAYMENT IN ITEM 622 - SINGLE SLOPE BARRIER, TYPE C OR C1, AS PER PLAN.

NOTE: FOR CONSTRUCTION NOTES AND LEGEND NOT SHOWN ON THIS SHEET, REFER TO ODOT STANDARD CONSTRUCTION DRAWING RM-4.3, SHEET 1.

CALCULATED | CHECKED

CONCRETE BARRIER, SINGLE SLOPE, TYPE C & C1, A.P.P.

FRA-70-14.54

1103
2317

ms consultants, inc.

PLOT.CEL
ms consultants, inc.
msconsultants.com
Ohio DOT Workspace
70\71 East Interchange 2E
www.msconsultants.com
Batchplot Spec: \\msconsultants.com\files\production\03\60\06634_2E\standards\plotdrv\batchplt.spc
Pen Table: \\msconsultants.com\files\Standards\ustn\ohdot\V8i\ms\plotting\pen\V8i_ms_std.tbl
Plot Driver: \\msconsultants.com\files\Standards\ustn\ohdot\v8i\ms\plotting\PDF.pltcfg
PCF: ohdotV8i
PCF: 60-06634_2E_Columbus
34" x 22"
Model: Sheet
Printed: 6/19/2018 @ 9:01:45 AM
File: N:\03\60\06634_2E\roadway\sheets\105322GM030.dgn
View: FENCE_VIEW1
By: jdouglas

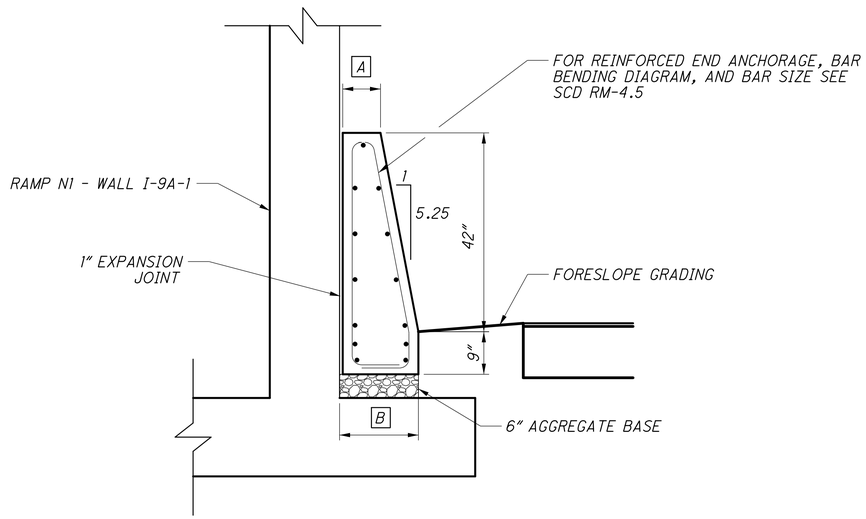

CONCRETE BARRIER END ANCHORAGE, REINFORCED, TYPE D, AS PER PLAN

RAMP N1

A STA. N1 - 876+63.14 TO STA. 876+75.64 = 1.00' - 1.42'
STA. N1 - 876+75.64 TO STA. 876+80.16 = SEE STRUCTURE PLANS FOR WALL INTERGRAL SAFETY SHAPE
STA. N1 - 876+80.16 TO STA. 876+876+99.77 = 1.42'
STA. N1 - 876+99.77 TO 877+09.10 = SEE STRUCTURE PLANS FOR WALL INTERGRAL SAFETY SHAPE
STA. N1 - 877+09.10 TO STA. 877+12.56 = 1.42' - 1.00'

B STA. N1 - 876+63.14 TO STA. 876+75.64 = 1.67' - 1.92'
STA. N1 - 876+75.64 TO STA. 876+80.16 = SEE STRUCTURE PLANS FOR WALL INTERGRAL SAFETY SHAPE
STA. N1 - 876+80.16 TO STA. 876+876+99.77 = 1.92'
STA. N1 - 876+99.77 TO 877+09.10 = SEE STRUCTURE PLANS FOR WALL INTERGRAL SAFETY SHAPE
STA. N1 - 877+09.10 TO STA. 877+12.56 = 1.92' - 1.67'

NOTE: FOR MISSING DIMENSIONS, DETAILS AND NOTES FOR THE TYPE D BARRIER, SEE ODOT'S STANDARD CONSTRUCTION DRAWINGS, RM-4.5.

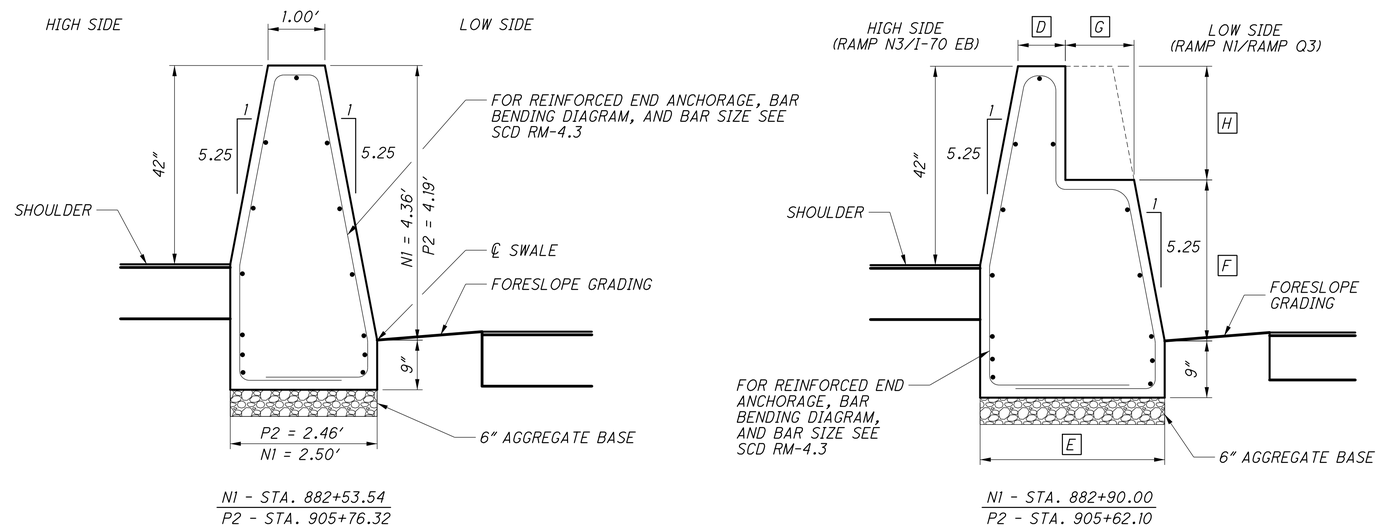

N1 - STA. 882+53.54
P2 - STA. 905+76.32

N1 - STA. 882+90.00
P2 - STA. 905+62.10

CONCRETE BARRIER, END ANCHORAGE, REINFORCED, TYPE C, AS PER PLAN "A"

RAMP N1

D STA. N1 - 882+53.54 TO STA. 882+90.00 = 1.00' - 1.54'

E STA. N1 - 882+53.54 TO STA. 882+90.00 = 2.50' - 3.96'

F STA. N1 - 882+53.54 TO STA. 882+90.00 = 4.36' - 3.50'

G STA. N1 - 882+53.54 TO STA. 882+90.00 = 0.00' - 1.08'

H STA. N1 - 882+53.54 TO STA. 882+90.00 = 0.00' - 1.99'

RAMP P2

D STA. P2 - 905+62.10 TO STA. 905+76.32 = 1.00'

E STA. P2 - 905+62.10 TO STA. 905+76.32 = 3.34' - 2.46'

F STA. P2 - 905+62.10 TO STA. 905+76.32 = 4.18' - 4.19'

G STA. P2 - 905+62.10 TO STA. 905+76.32 = 1.00' - 0.00'

H STA. P2 - 905+62.10 TO STA. 905+76.32 = 0.68' - 0.00'

NOTE: FOR MISSING DIMENSIONS, DETAILS AND NOTES FOR THE TYPE C BARRIER, SEE ODOT'S STANDARD CONSTRUCTION DRAWINGS, RM-4.3.

SEE TYPICAL SECTIONS FOR RACEWAY PLACEMENT LOCATIONS.

CALCULATED
CHECKED

SINGLE SLOPE, BARRIER END ANCHORAGE DETAILS

FRA-70-14.54

ms consultants, inc.

PLOT.CEL

ms consultants, inc.
msconsultants.com

www.msconsultants.com
Ohio DOT Workspace
70\71 East Interchange 2E
DGN: ohdot\V8i
DCF: 60-06634_2E_Columbus

1"
0.5"
0

Batchplot Spec: \\msconsultants.com\files\production\03\60\06634_2E\standards\plotdrv\batchplt.spc
Pen Table: \\msconsultants.com\files\Standards\ustn\ohdot\V8i\ms\plotting\pen\V8i_ms_std.tbl
Plot Driver: \\msconsultants.com\files\Standards\ustn\ohdot\V8i\ms\plotting\PDF.pltcfg

34" x 22"

View: FENCE_VIEW1
By: jdouglas
Model: Sheet @ 9:01:47 AM
Printed: 6/19/2018
File: N:\03\60\06634_2E\roadway\sheets\1053220M034.dgn

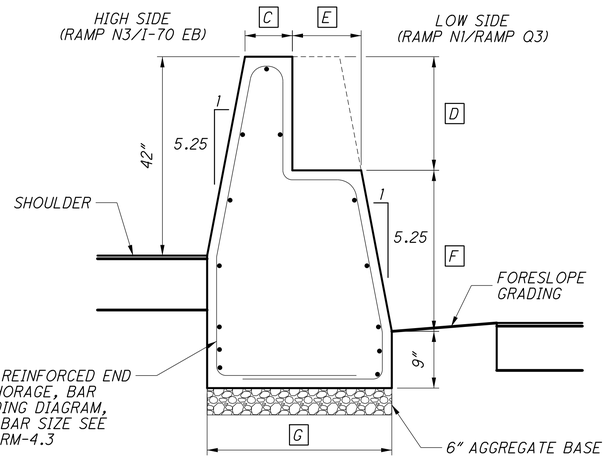

DETAIL SECTION A-A

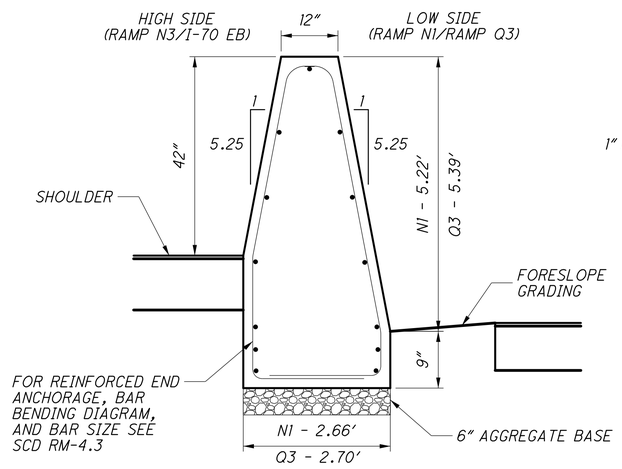

DETAIL SECTION B-B

RAMP N1

- C STA. N1 - 878+25.00 TO STA. 878+35.00 = 0.83' - 1.00'
- D STA. N1 - 878+25.00 TO STA. 878+35.00 = 2.00' - 0.00'
- E STA. N1 - 878+25.00 TO STA. 878+35.00 = 1.08' - 0.00'
- F STA. N1 - 878+25.00 TO STA. 878+35.00 = 3.50' - 5.22'
- G STA. N1 - 878+25.00 TO STA. 878+35.00 = 3.25' - 2.66'

RAMP Q3

- C STA. Q3 - 900+66.19 TO STA. 900+76.16 = 0.83' - 1.00'
- D STA. Q3 - 900+66.19 TO STA. 900+76.16 = 1.91' - 0.00'
- E STA. Q3 - 900+66.19 TO STA. 900+76.16 = 1.08' - 0.00'
- F STA. Q3 - 900+66.19 TO STA. 900+76.16 = 3.50' - 5.39'
- G STA. Q3 - 900+66.19 TO STA. 900+76.16 = 3.25' - 2.70'

NOTE: FOR MISSING DIMENSIONS, DETAILS AND NOTES FOR THE TYPE C BARRIER, SEE ODOT'S STANDARD CONSTRUCTION DRAWINGS, RM-4.3.

SEE TYPICAL SECTIONS FOR RACEWAY PLACEMENT LOCATIONS.

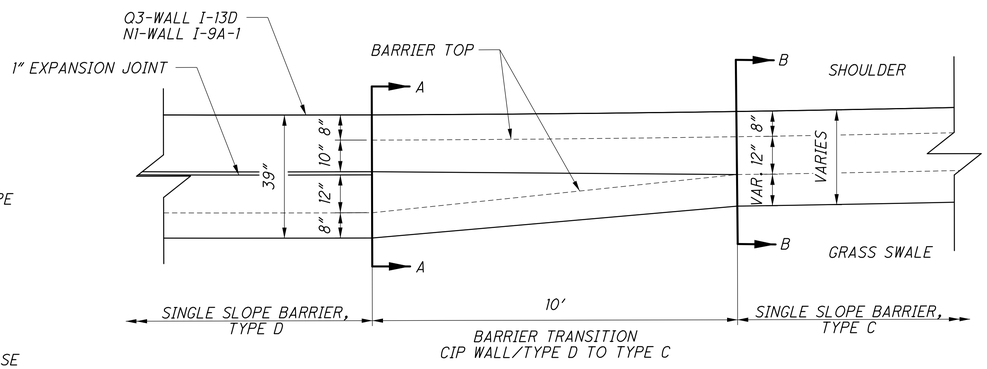

CONCRETE BARRIER, END ANCHORAGE, REINFORCED, TYPE C, AS PER PLAN "C"

BARRIER TRANSITION
CIP WALL/TYPE D TO TYPE C

PLAN VIEW

NTS

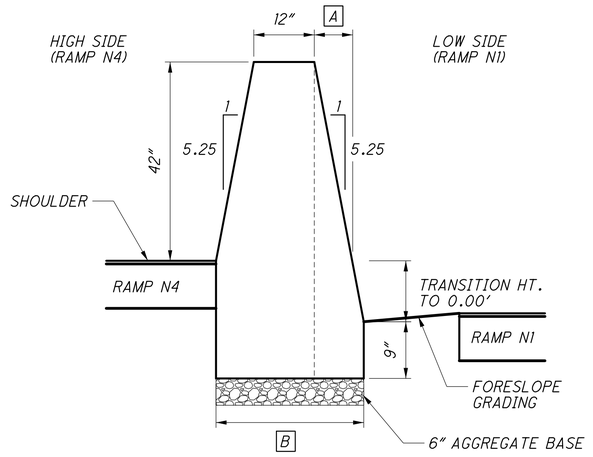

DETAIL SECTION C-C

RAMP N4

- A STA. N4 - 780+51.87 TO STA. 780+84.13 = 0.67' - 0.00'
- B STA. N4 - 780+51.87 TO STA. 780+84.13 = 2.33' - 1.67'

NOTE: FOR MISSING DIMENSIONS, DETAILS AND NOTES FOR THE TYPE C BARRIER, SEE ODOT'S STANDARD CONSTRUCTION DRAWINGS, RM-4.5.

SEE TYPICAL SECTIONS FOR RACEWAY PLACEMENT LOCATIONS.

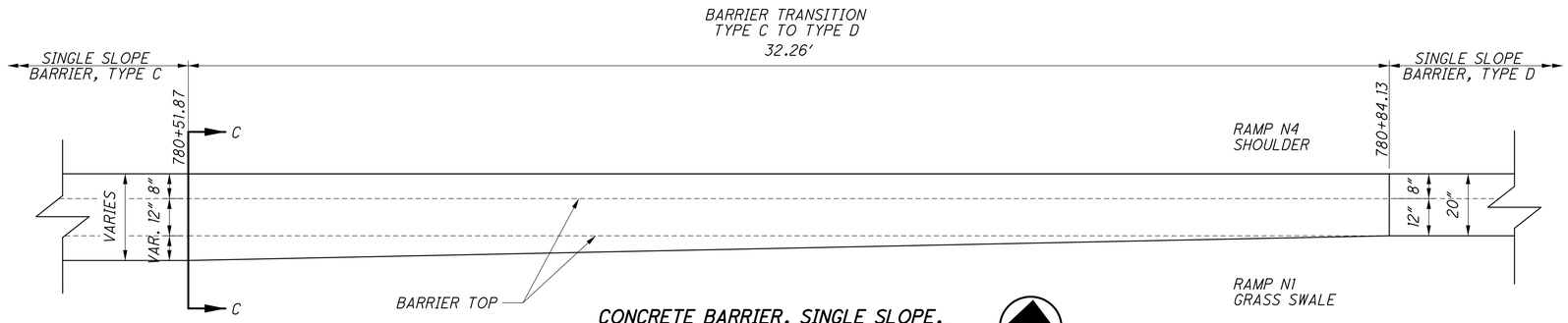

CONCRETE BARRIER, SINGLE SLOPE, TYPE C, AS PER PLAN "A"

BARRIER TRANSITION
TYPE C TO TYPE D

PLAN VIEW

NTS

CALCULATED | CHECKED

SINGLE SLOPE BARRIER DETAILS

FRA-70-14.54

1105
2317

ms consultants, inc.

PLOT.CEL
ms consultants, inc.
msconsultants.com
www.msconsultants.com
Ohio DOT Workspace
70\71 East Interchange 2E
DGN: ohdot\V8i
WCF: 60-06634_2E_Columbus
Batchplot Spec: \\msconsultants.com\Files\Production\03\60\06634_2E\standards\plotdrv\batchplt.spc
Pen Table: \\msconsultants.com\Files\Standards\ustn\ohdot\V8i\ms\plotting\pen\V8i_ms_std.tbl
Plot Driver: \\msconsultants.com\Files\Standards\ustn\ohdot\V8i\ms\plotting\PDF.pltcfg
Model: Sheet
Printed: 6/19/2018 @ 9:01:48 AM
File: N:\03\60\06634_2E\roadway\sheets\1053220M035.dgn
View: FENCE_VIEW1
By: jdouglas
34" x 22"

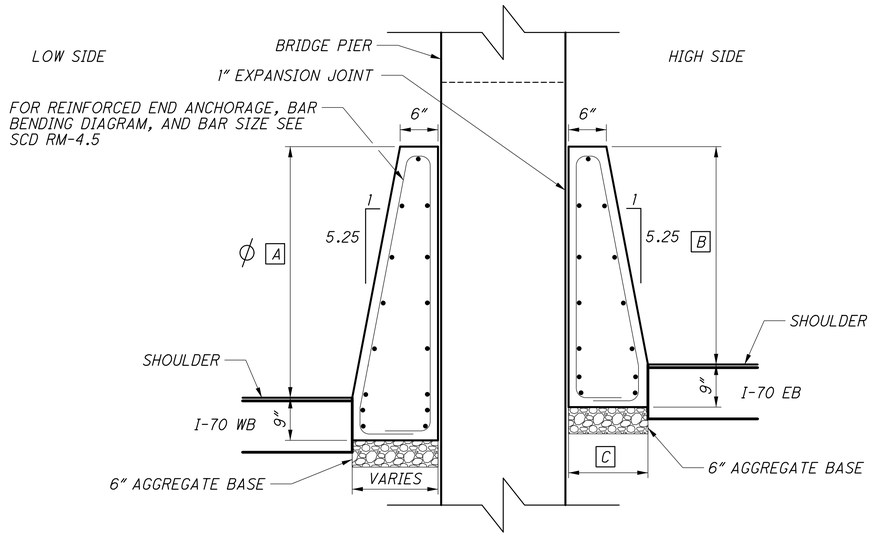

DETAIL SECTION C-C

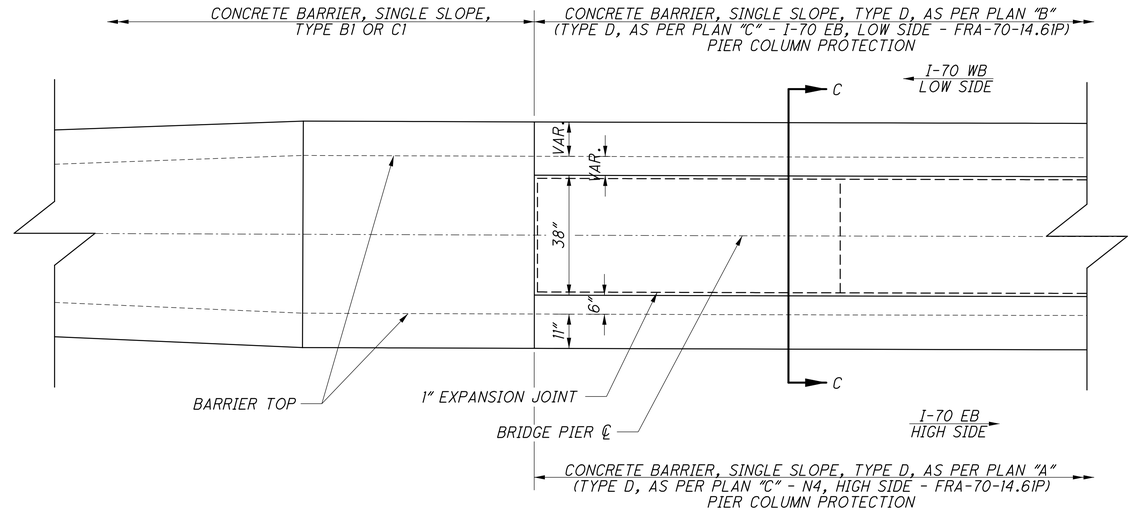

* [A] STA. I-70 (FRA-70-14.61P) - 772+29.63 TO STA. 773+28.79 = 58.5" - 57.38"
STA. I-70 (FRA-70-14.61P) - 773+32.81 TO STA. 774+31.98 = 42"
STA. I-70 (FRA-70-15.25C) - 804+37.94 TO STA. 805+05.61 = 57"

* [B] STA. I-70 (FRA-70-14.61P) - 772+29.63 TO STA. 773+28.79 = 57"
STA. I-70 (FRA-70-14.61P) - 773+32.81 TO STA. 774+31.98 = 42"
STA. I-70 (FRA-70-15.25C) - 804+37.94 TO STA. 805+05.61 = 57"

[C] STA. I-70 (FRA-70-14.61P) - 772+29.63 TO STA. 773+28.79 = 1.40'
STA. I-70 (FRA-70-14.61P) - 773+32.81 TO STA. 774+31.98 = 1.17'
STA. I-70 (FRA-70-15.25C) - 804+37.94 TO STA. 805+05.61 = 1.40'

* LOCATIONS WHERE BARRIER HEIGHT IS 57" IT WILL BE ITEM 622 CONCRETE BARRIER, SINGLE SLOPE, TYPE D, AS PER PLAN "A".
LOCATIONS WHERE BARRIER HEIGHT VARIES IT WILL BE ITEM 622 CONCRETE BARRIER, SINGLE SLOPE, TYPE D, AS PER PLAN "B".
LOCATIONS WHERE BARRIER HEIGHT IS 42" IT WILL BE ITEM 622 CONCRETE BARRIER, SINGLE SLOPE, TYPE D, AS PER PLAN "C".

NOTE: FOR MISSING DIMENSIONS, DETAILS AND NOTES FOR THE TYPE D BARRIER, SEE ODOT'S STANDARD CONSTRUCTION DRAWINGS, RM-4.5.
FOR BRIDGE PIER BARRIER TRANSITION SEE RM-4.4.
FOR BRIDGE PIER DETAILS SEE STRUCTURE SHEETS.

ϕ TOP OF BARRIER ON LOW SIDE SHALL MATCH TOP OF BARRIER ON HIGH SIDE.

CONCRETE BARRIER, SINGLE SLOPE, TYPE D, AS PER PLAN "A", "B" AND "C"

PIER COLUMN PROTECTION

PLAN VIEW

NTS

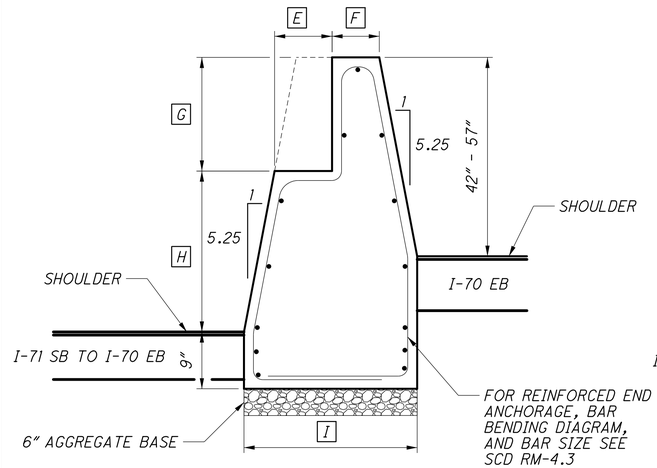

DETAIL SECTION A-A

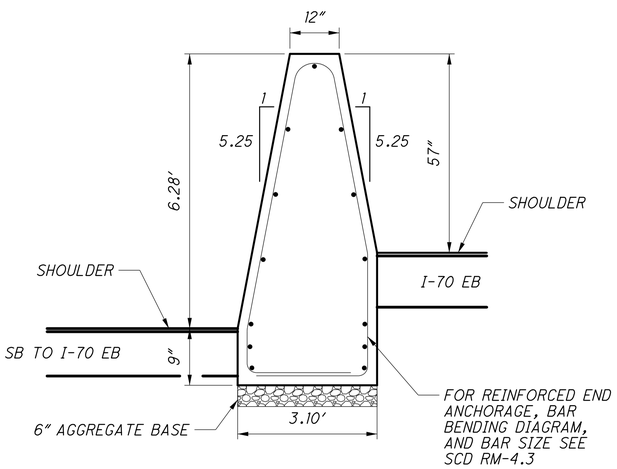

DETAIL SECTION B-B

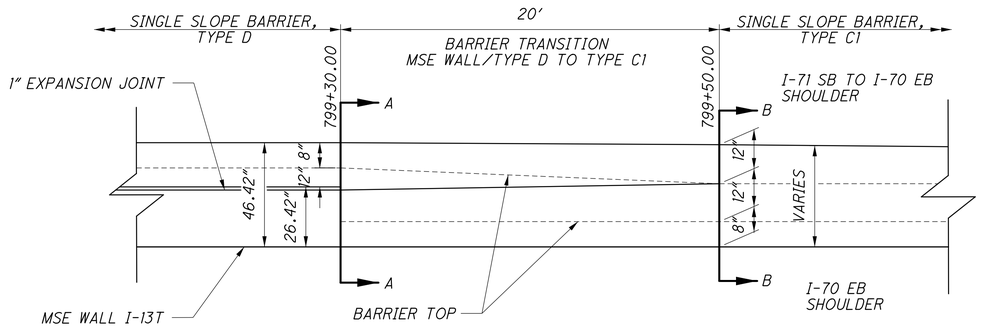

[E] STA. I-70 - 799+30.00 TO STA. 799+50.00 = 1.70' - 0.50'
[F] STA. I-70 - 799+30.00 TO STA. 799+50.00 = 0.83' - 0.50'
[G] STA. I-70 - 799+30.00 TO STA. 799+50.00 = 1.82' - 0.00'
[H] STA. I-70 - 799+30.00 TO STA. 799+50.00 = 3.50' - 6.28'
[I] STA. I-70 - 799+30.00 TO STA. 799+50.00 = 4.04' - 3.10'

NOTE: FOR MISSING DIMENSIONS, DETAILS AND NOTES FOR THE TYPE C BARRIER, SEE ODOT'S STANDARD CONSTRUCTION DRAWINGS, RM-4.3.

SEE TYPICAL SECTIONS FOR RACEWAY PLACEMENT LOCATIONS.

CONCRETE BARRIER END ANCHORAGE, REINFORCED, TYPE C1, AS PER PLAN "B"

BARRIER TRANSITION
CIP WALL/TYPE D TO TYPE C

PLAN VIEW

NTS

CALCULATED | CHECKED

SINGLE SLOPE BARRIER DETAILS

FRA-70-14.54

1106
2317

ms consultants, inc.

PLOT.CEL
ms consultants, inc.
msconsultants.com
www.msconsultants.com
Ohio DOT Workspace
70\71 East Interchange 2E
0 0.5" 1"
Batchplot Spec: \\msconsultants.com\Files\Production\03\60\06634_2E\standards\plotdir\batchplt.spc
Pen Table: \\msconsultants.com\Files\Standards\usth\ohdot\V8i\ms\plotting\pen\V8i_ms_std.tbl
Plot Driver: \\msconsultants.com\Files\Standards\usth\ohdot\v8i\ms\plotting\PDF.pltcfg
PDF: ohdot\V8i
PDF: 60-06634_2E_Columbus
Model: Sheet
Printed: 6/19/2018 @ 9:01:49 AM
File: N:\03\60\06634_2E\roadway\sheets\105322CM042.dgn
View: FENCE_VIEW1
By: jdouglas
34" x 22"

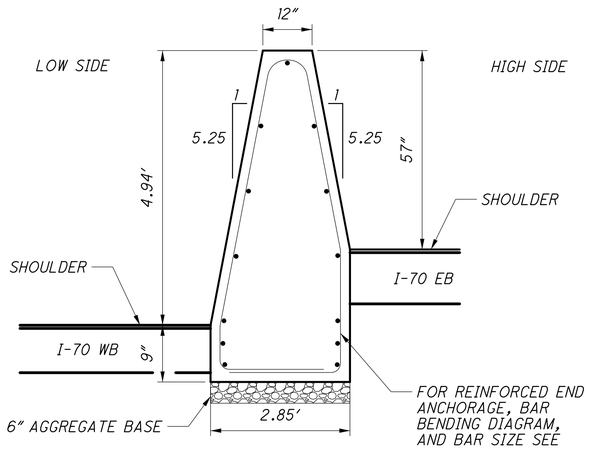

DETAIL SECTION A-A

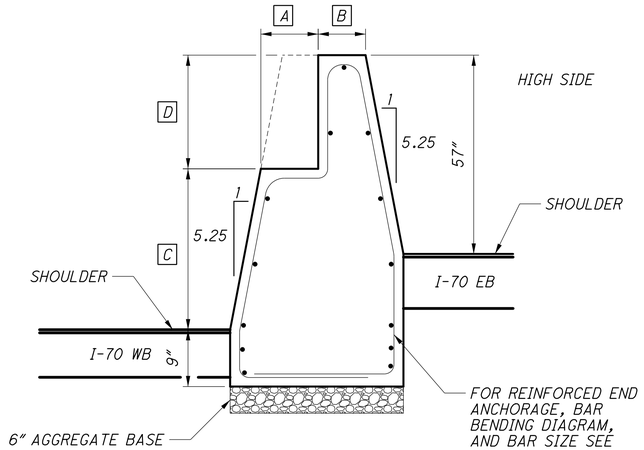

DETAIL SECTION B-B

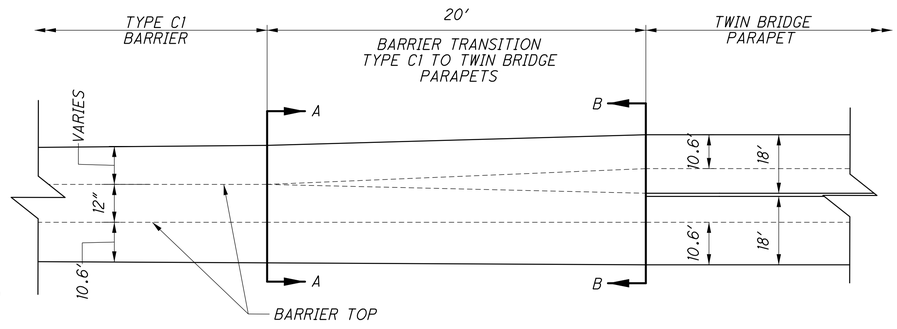

CONCRETE BARRIER END ANCHORAGE, REINFORCED, TYPE C1, AS PER PLAN "A"

BARRIER TRANSITION
TYPE C1 BARRIER TO TWIN 57″ BRIDGE PARAPETS
PLAN VIEW

NTS

MEDIAN BARRIER TRANSITION
(WEST OF BRIDGE)

- A STA. I-70 - 786+98.90 TO STA. 787+19.90 = 0.00′ - 0.60′
- B STA. I-70 - 786+98.90 TO STA. 787+19.90 = 1.00′ - 0.76′
- C STA. I-70 - 786+98.90 TO STA. 787+19.90 = 4.94′ - 4.75′
- D STA. I-70 - 786+98.90 TO STA. 787+19.90 = 0.00′ - 0.19′

MEDIAN BARRIER TRANSITION
(EAST OF BRIDGE)

- A STA. I-70 - 788.96.00 TO STA. 789+11.00 = 0.60′ - 0.00′
- B STA. I-70 - 788.96.00 TO STA. 789+11.00 = 0.76′ - 1.00′
- C STA. I-70 - 788.96.00 TO STA. 789+11.00 = 4.75′ - 4.94′
- D STA. I-70 - 788.96.00 TO STA. 789+11.00 = 0.19′ - 0.00′

NOTE: FOR MISSING DIMENSIONS, DETAILS AND NOTES FOR THE TYPE C BARRIER, SEE ODOT'S STANDARD CONSTRUCTION DRAWINGS, RM-4.3.

SEE TYPICAL SECTIONS FOR RACEWAY PLACEMENT LOCATIONS.

CALCULATED | CHECKED

CONCRETE

FRA-70-14.54

1107
2317

ms consultants, inc.

PLOT.CEL
ms consultants, inc.
msconsultants.com
www.msconsultants.com
Ohio DOT Workspace
70\71 East Interchange 2E
Batchplot Spec: \\msconsultants.com\files\production\03\60\06634_2E\standards\plotdir\batchplt.spc
Pen Table: \\msconsultants.com\files\Standards\astm\ohdot\V8i\ms\plotting\pen\V8i_ms_std.tbl
Plot Driver: \\msconsultants.com\files\Standards\astm\ohdot\V8i\ms\plotting\PDF.pltcfg
PDF: ohdotV8i
PDF: 60-06634_2E_Columbus
Model: Sheet
Printed: 6/19/2018 @ 9:01:51 AM
File: N:\03\60\06634_2E\roadway\sheets\105220M039.dgn
View: FENCE_VIEW1
By: jdouglas
34" x 22"

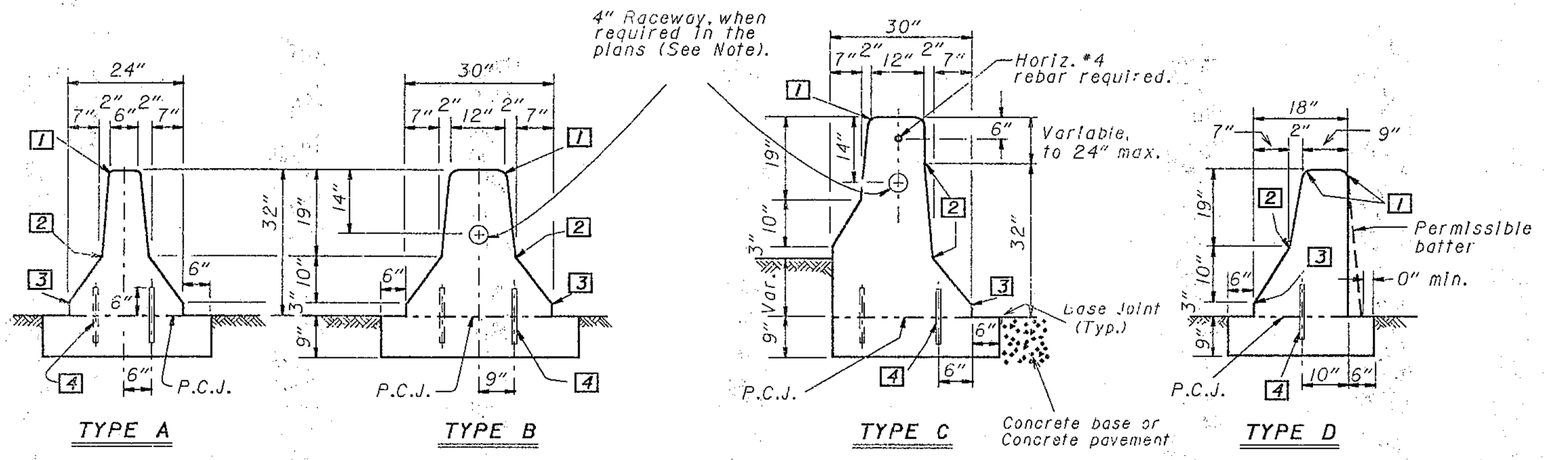

TYPE A TYPE B TYPE C TYPE D

NORMAL SECTIONS

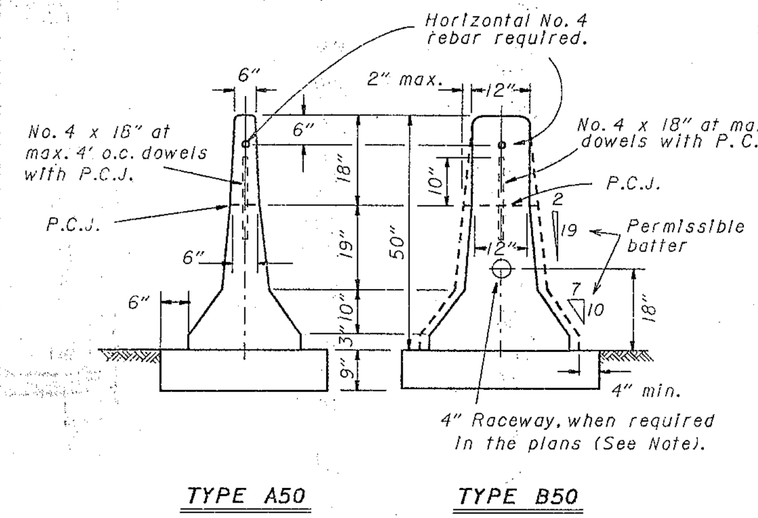

TYPE A50 TYPE B50

50" BARRIERS - TYPICAL SECTIONS

LEGEND

1. 1" Radius or 3/4" chamfer.
2. Permissible 10" radius.
3. Permissible 1" radius.
4. No. 8 epoxy coated deformed steel bars, 12" long, spaced 4' between successive bars on a staggered (except Type D) pattern. Omit dowels when top is constructed integral with the base.

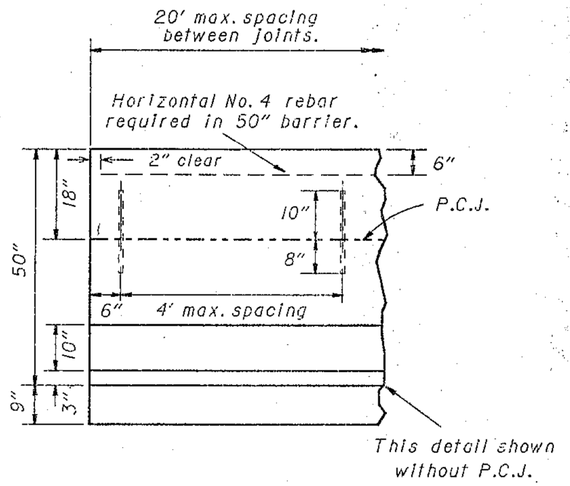

50" BARRIER

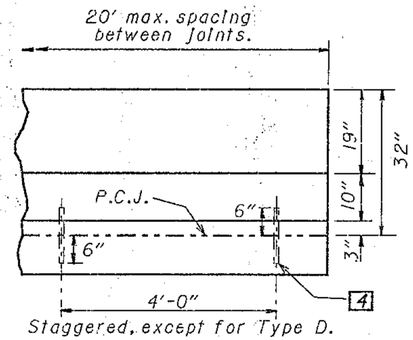

32" BARRIER

BARRIER ELEVATIONS

NOTES

JOINTS: Unsealed contraction joints spaced at 20' max. shall be constructed throughout the run of Concrete Barrier except that expansion joints shall be used at the center line of and around each bridge pier column and on either side of overhead sign supports, inlets and light pole foundations. If inlet top is slip formed, the expansion joints adjacent to it may be omitted.

Contraction joints may be constructed with metal inserts inside the forms, preformed full width joint filler, a grooving tool, or by sawing. Inserts, tooled or sawed joints shall have a 3" minimum depth. All joints shall be constructed for the full height of the barrier including the base. Sawing shall be done as soon as curing will allow, to prevent spalling.

BASE JOINTS: The vertical walls between the barrier base and a concrete pavement or concrete base shall be provided with a sealed, grooved joint as shown on Std. Const. Dwg. BP-2.1. Sealing material shall conform with CMS 705.04.

P.C.J. = Permissible Construction Joint

MEASUREMENT: 622 Concrete Barrier, including transitions and pier sections as per Standard Const. Drawing MC-9.4, is paid for in linear feet as one of the four types (A,B,C or D) or as Type A50 and B50, (for 50" high barrier), with appropriate deductions for other items such as:

604 I-3 Median Inlet	20 Lin. Ft.
625 Light pole foundation or pullbox	2.5 Lin. Ft.
630 Overhead sign support foundation	10 Lin. Ft.
630 Barrier wall assembly	10 Lin. Ft.

50 INCH HIGH BARRIER shall be built in locations specified in the plans. Construct the lower 32" of the barrier and the barrier base using the same dimensions as shown in the corresponding Normal Section. The upper 18" may be constructed integral with the bottom, or separately with No. 4 rebar dowels at 4 foot maximum spacing. Start and end dowels 6" from barrier contraction joints.

RACEWAY: The contractor shall insure that the electrical raceway is clear of internal obstructions. Cost of the 4 inch polyvinyl chloride raceway and No. 10 AWG copper-clad or aluminum-clad wire if needed for future installation of circuits shall be included in the unit cost per lineal foot for Item 622, Concrete Barrier.

STATION MARKING shall be impressed in the "green" concrete on both sides at the top of the barrier if specified in the plans, which cost shall be incidental to the unit cost per linear foot bid for Item 622, Concrete Barrier.

BUREAU OF LOCATION AND DESIGN
OHIO DEPARTMENT OF TRANSPORTATION

CONCRETE BARRIER

DATE 10-30-92

STANDARD CONSTRUCTION DRAWING **MC-9.3**

APPROVED E.K. Hildebrand ENGR., L & D

CALCULATED | CHECKED

BARRIER, MISC.: NEW JERSEY STYLE, TYPE B50, AS PER PLAN

FRA-70-14.54

1108
2317

ms consultants, inc.

PLOT.CEL
ms consultants, inc.
msconsultants.com
www.msconsultants.com
Ohio DOT Workspace
70\71 East Interchange 2E
Batchplot Spec: \\msconsultants.com\files\production\03\60\06634_2E\standards\plotdrv\batchplt.spc
Pen Table: \\msconsultants.com\files\Standards\ustn\ohdot\V8i\ms\plotting\pen\V8i_ms_std.tbl
Plot Driver: \\msconsultants.com\files\Standards\ustn\ohdot\V8i\ms\plotting\PDF.pltcfg
PDF: ohdotV8i
DGN: 60-06634_2E_Columbus
34" x 22"
View FENCE_VIEW1
By: jdougas
Model: Sheet @ 9:02:05 AM
Printed: 6/19/2018
File: N:\03\60\06634_2E\roadway\sheets\1053220M049.dgn

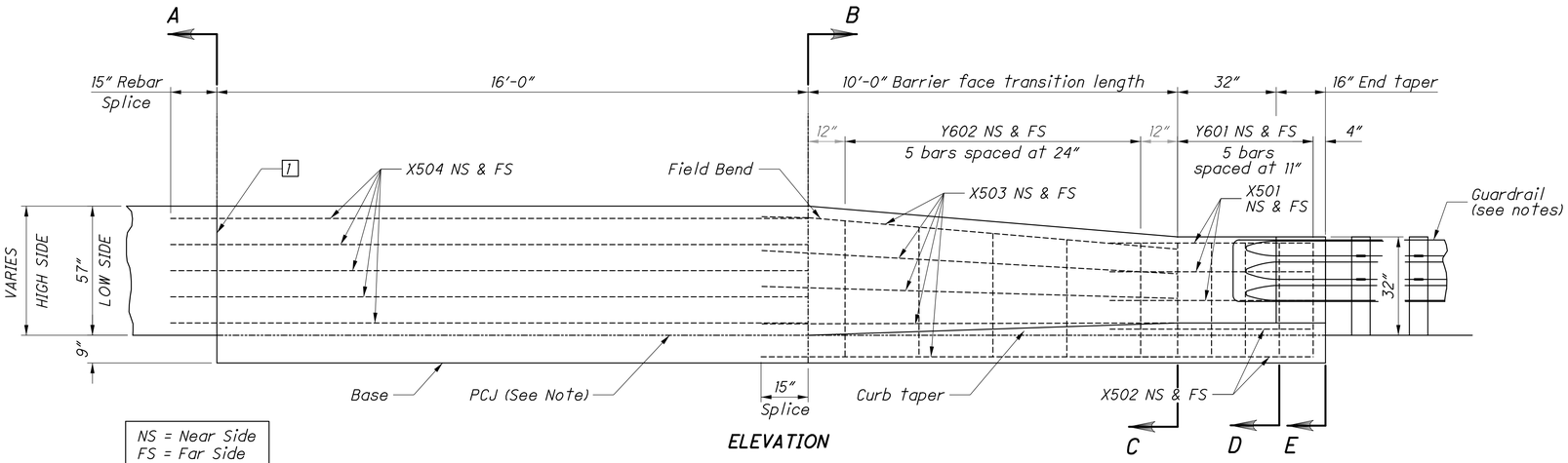

NS = Near Side
FS = Far Side

1 Contraction Joint. See NOTES on SCD RM-4.3. Provide rebar cover of 3½".

ELEVATION

BARRIER END SECTION TYPE C1

TYPE B STEEL LIST				
Mark	**Bar**	**Shape**	**No.**	**Length**
X501	#5	Bent	6	5'-6"
X502	#5	Straight	4	5'-6"
X503	#5	Straight	10	11'-1"
X504	#5	Straight	10	17'-2"
Y601	#6	Bent	10	Varies 4'-2" to 6'-2"
Y602	#6	Bent	1 series of 5	Varies 4'-3" to 7'-3"
Y603	#6	Bent	1 series of 5	Varies

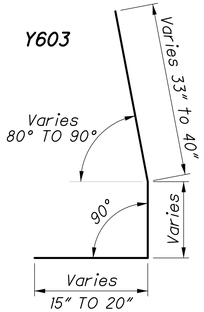

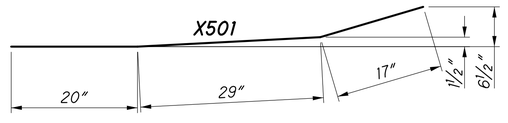

BENDING DIAGRAMS

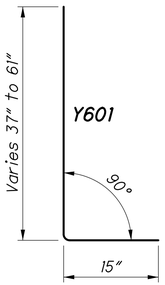

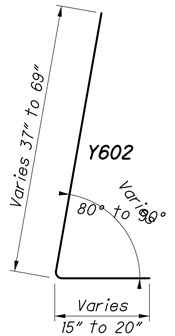

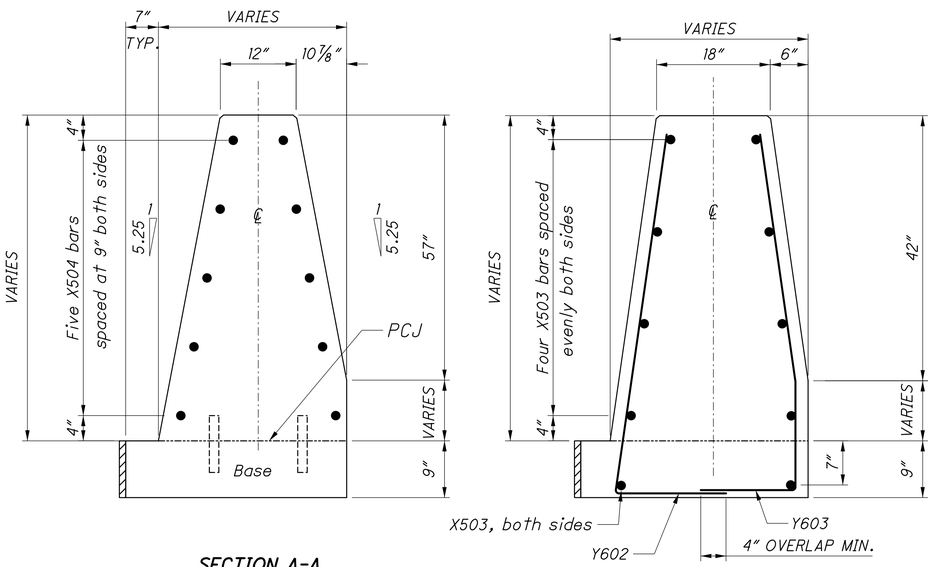

SECTION A-A

SECTION B-B

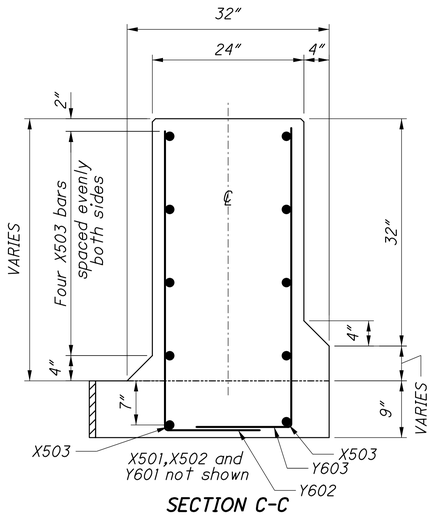

SECTION C-C

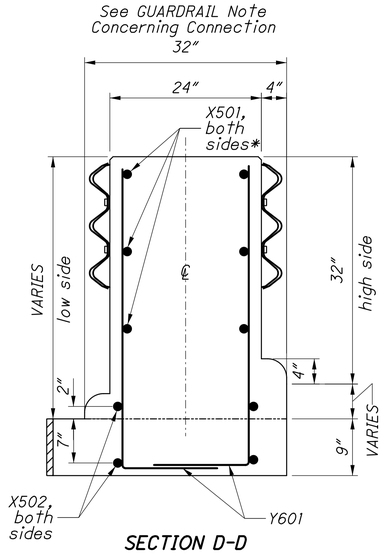

SECTION D-D
*evenly spaced

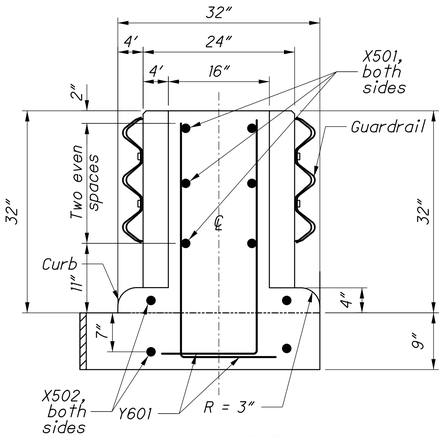

SECTION E-E

NOTE: FOR CONSTRUCTION NOTES, DETAILS AND LEGEND NOT SHOWN ON THIS SHEET, REFER TO ODOT STANDARD CONSTRUCTION DRAWING RM-4.6, SHEET 2.

CALCULATED | CHECKED

CONCRETE BARRIER END SECTION TYPE C1, AS PER PLAN

FRA-70-14.54

1109
2317

ms consultants, inc.

PLOT.CEL
ms consultants, inc.
msconsultants.com
www.msconsultants.com
Ohio DOT Workspace
70\71 East Interchange 2E
0 0.5" 1"
Batchplot Spec: \\msconsultants.com\files\production\03\60\06634_2E\standards\plotdrv\batchplt.spc
Pen Table: \\msconsultants.com\files\Standards\usth\ohdot\V8i\ms\plotting\pen\V8i_ms_std.tbl
Plot Driver: \\msconsultants.com\files\Standards\usth\ohdot\V8i\ms\plotting\PDF.pltcfg
PDF: ohdotV8i
PDF: 60-06634_2E_Columbus
Model: Sheet
Printed: 6/19/2018 @ 9:02:07 AM
File: N:\03\60\06634_2E\roadway\sheets\105220M040.dgn
View: FENCE_VIEW1
By: jdouglas
34" x 22"

NOTE

STANDARD BARRIERS: Types A, B, or C concrete barriers shall be constructed as per Std. Const. Drwg. MC-9.3 or as detailed in the plans.

LEGEND

1. 1" Radius or 3/4" chamfer.
2. Permissible 10" radius.
3. Permissible 1" radius.
4. No. 8 epoxy coated deformed steel bars, 12" long, spaced 2' between successive bars on a staggered (except Type D) pattern. Dowel bars shall begin 4' from the leading edge of the End Terminal. Omit dowels when top is constructed integral with the base.
5. Expansion joint, 3/4" min. Preformed Filler 705.03.

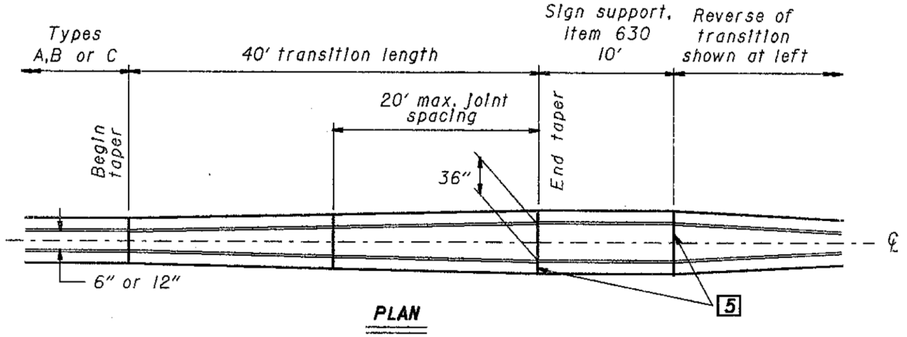

PLAN

SIGN SUPPORT TRANSITION

(For 50" barriers, the upper 18" varies from 6" or 12" width to 36" width.)

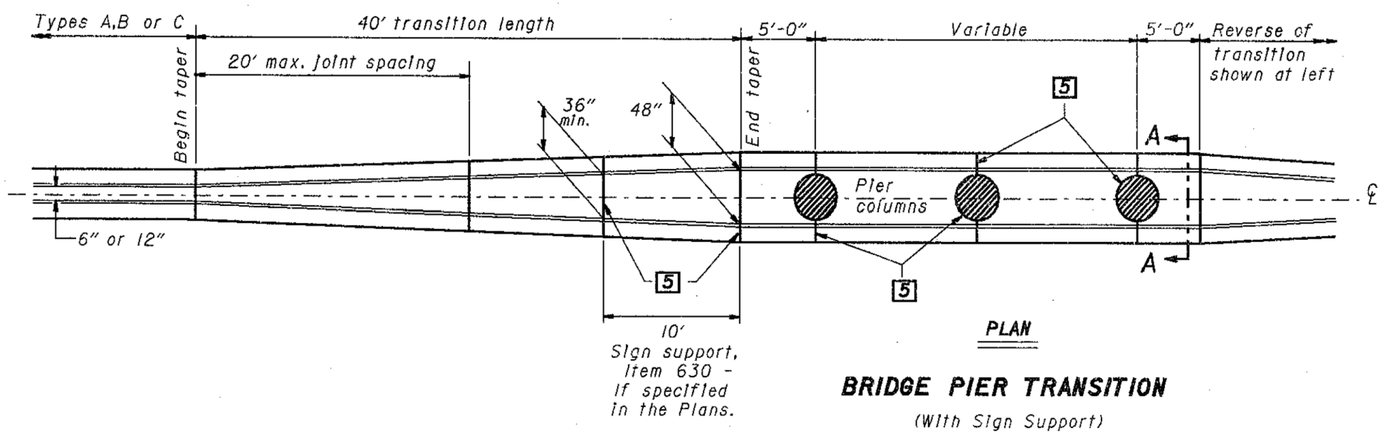

PLAN

BRIDGE PIER TRANSITION

(With Sign Support)

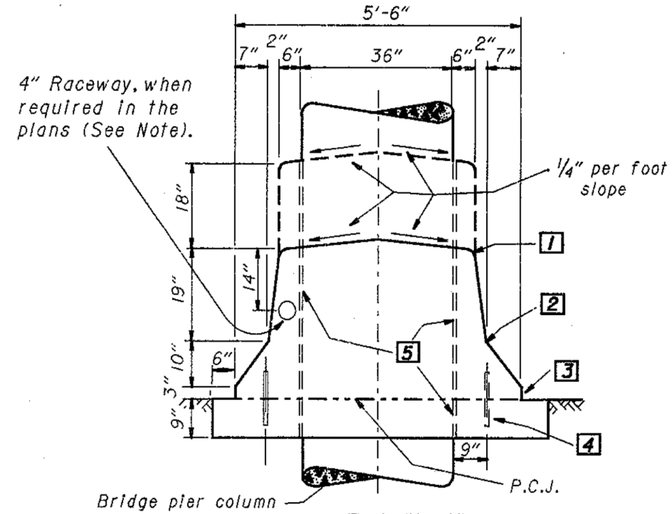

SECTION "A -A"

BUREAU OF LOCATION AND DESIGN
OHIO DEPARTMENT OF TRANSPORTATION

CONCRETE BARRIER TRANSITIONS

DATE 10-30-92

STANDARD CONSTRUCTION DRAWING **MC-9.4**

APPROVED N.K. Hutchinson ENGR., L & D

CALCULATED | CHECKED

CONCRETE BARRIER TRANSITIONS, NEW JERSEY STYLE, AS PER PLAN

FRA-70-14.54

1110
2317

ms consultants, inc.

PLOT.CEL
ms consultants, inc.
msconsultants.com
www.msconsultants.com
Ohio DOT Workspace
70\71 East Interchange 2E
Batchplot Spec: \\msconsultants.com\files\production\03\60\06634_2E\standards\plotdrv\batchplt.spc PCF: ohdot\V8i
Pen Table: \\msconsultants.com\files\Standards\usitn\ohdot\V8\ms\plotting\pen\V8i_ms_std.tbl PCF: 60-06634_2E_Columbus
Plot Driver: \\msconsultants.com\files\Standards\usitn\ohdot\v8\ms\plotting\PDF.pltcfg
Model: Sheet
Printed: 6/19/2018 @ 9:02:23 AM
File: N:\03\60\06634_2E\roadway\sheets\105226M005.dgn
View: FENCE_VIEW1
By: jdouglas
34" x 22"

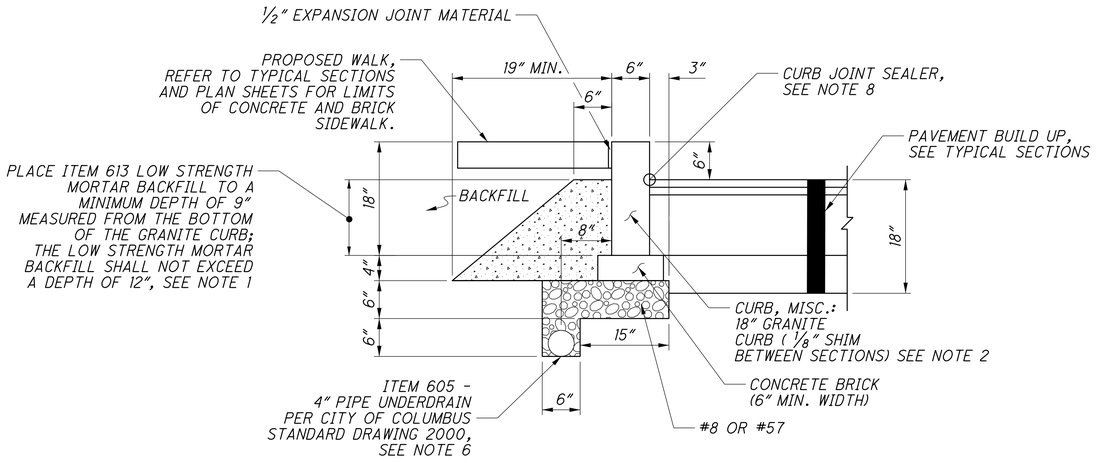

GRANITE CURB DETAIL WITH SIDEWALK
ITEM 609 - CURB, MISC.: 18" GRANITE CURB, AS PER PLAN
ITEM 605 - 4" BASE PIPE UNDERDRAIN DETAIL

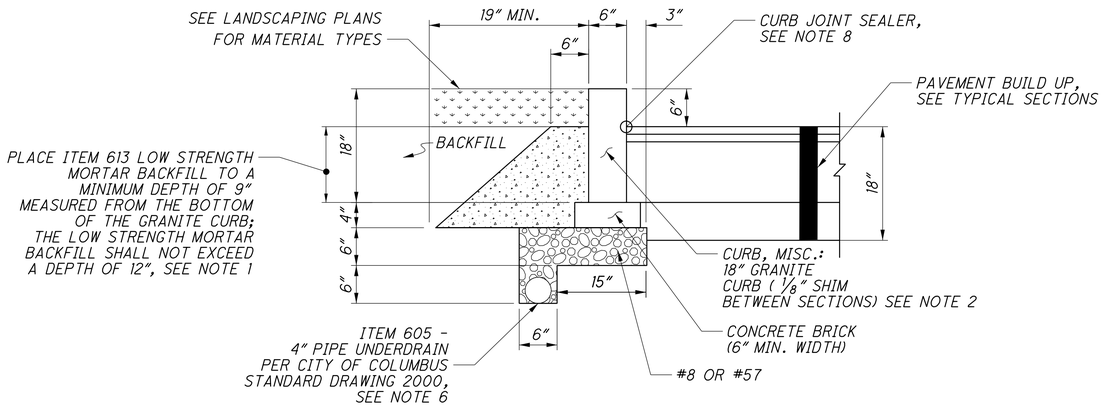

GRANITE CURB DETAIL WITHOUT SIDEWALK

NOTE 1: INSTALL ITEM 613 - LOW STRENGTH MORTAR BACKFILL, AS PER PLAN BEHIND GRANITE CURB. PLACE ITEM 613 - LOW STRENGTH MORTAR BACKFILL PER SECTION 613 OF THE CURRENT VERSION OF THE ODOT CMS PER THE DETAIL ON THIS SHEET. PROVIDE AN ALTERNATE MIX AS FOLLOWS: 100 LB CEMENT; 0 LB FLY ASH, CLASS F; 0 LB FLY ASH, CLASS C; 2850 LB SAND; AND 500 LB WATER (MAXIMUM).

NOTE 2: GRANITE COLOR SHALL BE AS FOLLOWS, WITH A SPLIT FACE FRONT AND BACK, SAWN TOP FACE, AND A FLAME FINISH. BUTT THE ENDS OF THE GRANITE CURB TIGHT TO ADJACENT CURB.

MT. AIRY GRANITE COLOR, THE UNIT COST DESCRIPTION SHALL BE: CURB, MISC.: STRAIGHT 18" GRANITE CURB, AS PER PLAN "A".

THE GRANITE CURB SHALL BE SUPPLIED BY:

ARCHITECTURAL SPECIALTIES, LTD
7871 BLACKS ROAD
P.O. BOX 1004
PATASKALA, OH 43062
PHONE: (740) 927-6628

OR

BFR & ASSOCIATES
200 GAY STREET
MANCHESTER, NH 03103
PHONE: (603) 623-3452
www.bfrandassociates.com/curbing2.html

OR

THE NORTH CAROLINA GRANITE CORPORATION
P.O. BOX 151
MOUNT AIRY, NC 27030
PHONE: (800) 227-6242
sales@ncgranite.com

OR APPROVED EQUAL

NOTE 3: PLACE GRANITE CURB AS SHOWN IN PLANS.

NOTE 4: FOR INSTALLATION DETAILS, SEE SHEET 1803 CONSTRUCTION SEQUENCING FOR GRANITE CURBS.

NOTE 5: WALK BEHIND GRANITE CURB SHALL BE BRICK OR CONCRETE. SEE PLAN & PROFILE SHEETS & INTERSECTION DETAIL SHEETS FOR MATERIAL LOCATIONS. FOR BRICK WALK DETAILS, SEE SHEET 1804.

NOTE 6: THE COSTS OF ITEM 605 - 4" BASE PIPE UNDERDRAIN, AND ASSOCIATED WORK AS DESCRIBED IN ODOT'S CMS ITEM 605 IS NOT INCLUDED IN THE COST OF THE CURB MISC.: 18" GRANITE CURB, AS PER PLAN.

NOTE 7: GRANITE SHALL BE FIELD CUT AT CURB RAMPS TO ALLOW FOR FIELD ADJUSTMENTS AS DIRECTED BY THE PROJECT ENGINEER.

NOTE 8: FOR ADDITIONAL DETAILS AND NOTES NOT SHOWN ON THIS SHEET, REFERENCE THE COC STD. DRAWING 2005 ON SHEET 1922A.

CALCULATED | CHECKED

MISC. DETAIL - STRAIGHT GRANITE CURB

FRA-70-14.54

ms consultants, inc.

PLOT.CEL
ms consultants, inc.
msconsultants.com
www.msconsultants.com
Ohio DOT Workspace
70\71 East Interchange 2E
0 0.5" 1"
Batchplot Spec: \\msconsultants.com\files\production\03\60\06634.2E\standards\plotdrv\batchplt.spc PDF: ohdot\V8i
Pen Table: \\msconsultants.com\files\Standards\astm\ohdot\V8i\ms\plotting\pen\V8i_ms_std.tbl PCF: 60-06634_2E_Columbus
Plot Driver: \\msconsultants.com\files\Standards\astm\ohdot\v8i\ms\plotting\PDF.pltcfg
Model: Sheet @ 9:02:25 AM View: FENCE_VIEW1
Printed: 6/19/2018 By: jdouglas
File: N:\03\60\06634.2E\roadway\sheets\105322600025.dgn
34" x 22"

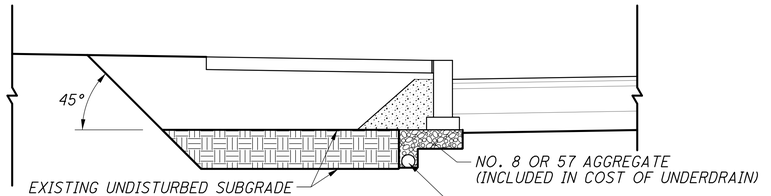

STEP 1 (N.T.S.)

- PERFORM CEMENT STABILIZED SUBGRADE PER TYPICAL SECTIONS (IF CALL OUT FOR)
- EXCAVATE FOR CURB INSTALLATION
- INSTALL 4" UNDERDRAIN WITH AGGREGATE IN ALTERNATE LOCATION

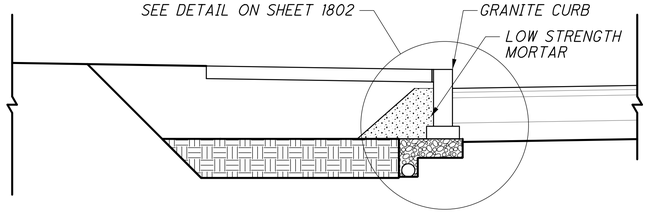

STEP 2 (N.T.S.)

- GRADE AND LEVEL SOIL AND UNDERDRAIN AGGREGATE BENEATH CURB.
- SET AND LEVEL CURB ON SHIMS TO FINISHED TOP OF CURB ELEVATION.
- POUR LOW STRENGTH MORTAR.

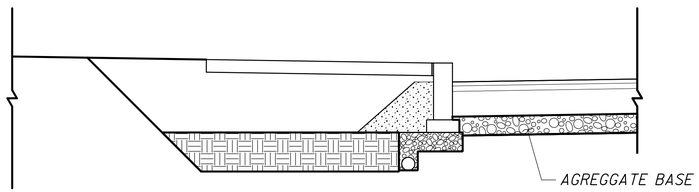

STEP 3 (N.T.S.)

- EXCAVATE AND COMPACT SUBGRADE, IN ACCORDANCE WITH CMS 203.
- INSTALL AGGREGATE BASE IN ACCORDANCE TO THE TYPICAL SECTIONS.

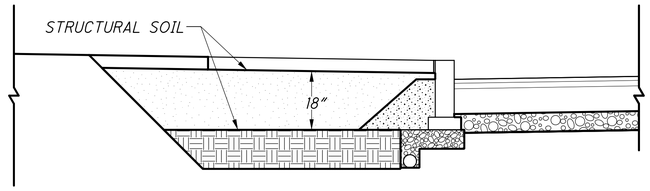

STEP 4 (N.T.S.)

- INSTALL STRUCTURAL SOIL TO SUBGRADE.
  (NOTE: SEQUENCING OF STEPS 4 AND 5 CAN BE REVERSED OR CONCURRENT)

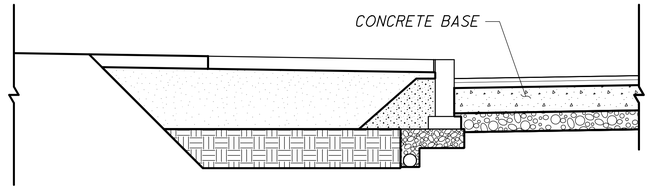

STEP 5 (N.T.S.)

- INSTALL CONCRETE BASE IN ACCORDANCE TO TYPICAL SECTIONS.
  (NOTE: SEQUENCING OF STEPS 4 AND 5 CAN BE REVERSED OR CONCURRENT)

NOTE: FOR BRICK PAVER WALK, GRANITE CURB SHALL HAVE A 3" DETACHMENT ON BACK FACE TO ALLOW FOR BRICK PAVERS TO CLEANLY ABUT THE CURB.

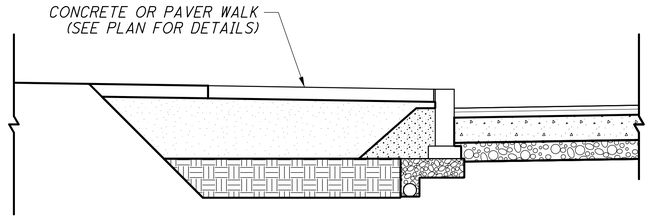

STEP 6 (N.T.S.)

- COMPACT SIDEWALK SUBGRADE IN ACCORDANCE WITH CMS 608.
- INSTALL CONCRETE AND/OR BRICK PAVER WALK AS SPECIFIED WITHIN THE PLANS.

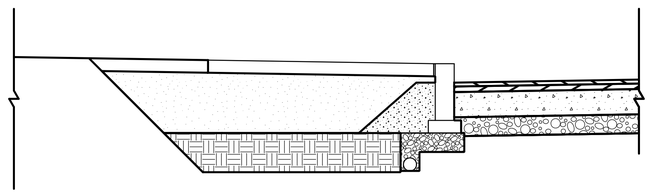

STEP 7 (N.T.S.)

- PERFORM PAVEMENT BUILDUP PER TYPICAL SECTIONS.
- APPLY CURB JOINT SEALER.

CONSTRUCTION SEQUENCE FOR GRANITE CURBS

CALCULATED | CHECKED

FRA-70-14.54

1112
2317

PLOT.CEL
ms consultants, inc.
msconsultants.com
www.msconsultants.com
Ohio DOT Workspace
70\71 East Interchange 2E
PDF: ohdot\V8i
PCF: 60-06634_2E_Columbus
Batchplot Spec: \\vnsconsultants.com\files\production\03\60\06634_2E\standards\plotdrv\batchplt.sbc
Pen Table: N:\03\60\06634_2E\standards\tables\V8i_ms_std_06634_2D_Plan View.tbl
Plot Driver: \\vnsconsultants.com\files\Standards\astm\ohdot\v8i\ms\plotting\PDF.pltcfg
Model: Sheet
Printed: 8/31/2018 @ 10:52:45 AM
File: N:\03\60\06634_2E\roadway\sheets\105320M008.dgn
View: SHEET
By: lbrendlinger
34" x 22"

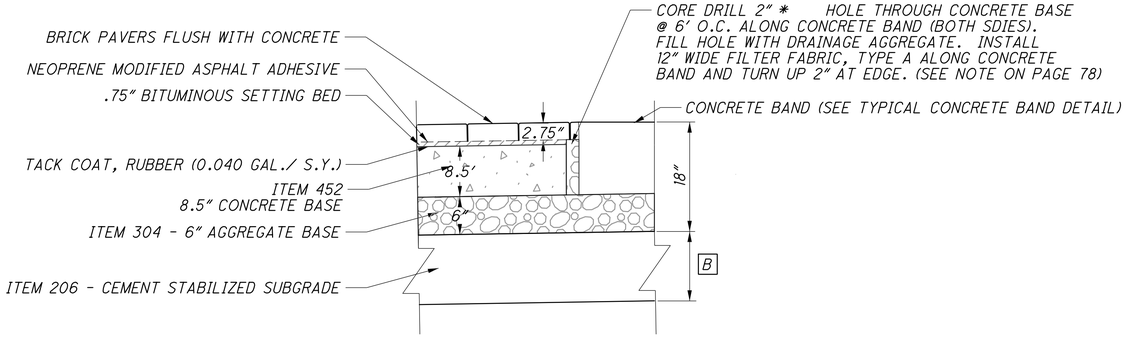

ITEM 608 - WALKWAY, MISC.: BRICK PAVER CROSSWALK, AS PER PLAN

CONCRETE BASE, CONCRETE APRON, AGGREGATE BASE, SUBGRADE COMPACTION AND APPURTENANCES SHALL BE INCLUDED IN ITEM 608 - WALKWAY, MISC.: BRICK PAVER CROSSWALK, AS PER PLAN.

MATERIAL NOTES

BRICK PAVER

SEE GENERAL NOTE SHEET 123 FOR SUPPLIER.
SEE DETAIL SHEET 1805 FOR PATTERN.

NEOPRENE - MODIFIED ASPHALT ADHESIVE

1. FURNISH NEOPRENE-MODIFIED ASPHALT ADHESIVE THAT CONTAINS 2 PERCENT NEOPRENE, GRADE WM1, OXIDIZED ASPHALT WITH A 150 DEGREE SOFTEN POINT (77 PENETRATION), AND 10 PERCENT LONG-FIBERED INERT MATERIAL, AS SUPPLIED BY:

   KARNAK
   330 CENTRAL AVENUE
   CLARK, NJ 07066
   (800) 526-4236
   http://www.karnakcorp.com

   HANOVER ARCHITECTUAL PRODUCTS
   5000 HANOVER ROAD
   HANOVER, PA 17331
   (717) 637-0500
   http://www.hanoverpavers.com

   OR APPROVED EQUAL

BITUMINOUS SETTING BED

1. FURNISH ASPHALT CEMENT CONFORMING TO ASTM 03381, VISCOSITY GRADE PG64-22.

2. FURNISH FINE AGGREGATE OF NATURAL SAND AND/OR STONE SAND, COMPOSED OF HARD, TOUGH, DURABLE, UNCOATED PARTICLES, FREE FROM CLAY, SILT, ORGANIC MATERIAL OR OTHER DELETERIOUS SUBSTANCES. INSURE THE SAND IS UNIFORMLY GRADED WITH ALL MATERIAL PASSING THE NO. 4 SIEVE AND MEETING THE REQUIREMENTS OF ASTM C136.

3. COMBINE THE DRIED FINE AGGREGATE WITH HOT ASPHALT CEMENT AND HEAT MIX TO APPROXIMATELY 300°F AT AN ASPHALT PLANT.

   A. PROVIDE AN APPROXIMATE PROPORTION OF MATERIALS OF 7 PERCENT ASPHALT CEMENT AND 93 PERCENT FINE AGGREGATE.

   B. PROVIDE EACH TON APPORTIONED BY WEIGHT TO 140 POUNDS OF ASPHALT CEMENT AND 1.860 POUNDS OF FINE AGGREGATE.

   ITEM SPECIAL - MISC: BRICK PAVER CROSSWALK, AS PER PLAN SHALL BE PLACED IN LOCATIONS AS SHOWN ON PLAN SHEETS AND DETAIL SHEETS.

   ITEM 608 - WALKWAY, MISC.: BRICK PAVER CROSSWALK, AS PER PLAN SHALL BE PLACED IN HERRINGBONE PATTERN.

4. FOR PROTECTION OF THE BRICK PAVERS IN THE CROSSWALK FROM CONSTRUCTION ACTIVITIES OF THIS PROJECT, SEE NOTE BRICK PAVER CROSSWALK CONSTRUCTION PROTECTION IN THE GENERAL NOTES.

5. BRICK PAVERS CONSTRUCTION FOR CROSSWALKS SHALL ALSO FOLLOW THE CITY OF COLUMBUS SUPPLEMENTAL SPECIFICATION 1524. SEE GENERAL NOTE SHEETS 130A AND 130B. FOR COLORS AND SUPPLIERS, SEE GENERAL NOTE SHEET 123.

A AND B

FULTON ST. / FOURTH ST. INTERSECTION

(44) 14" UNDERCUT

SEE SHEET 17 FOR LEGEND

NOTE: IF EDGING IS NEEDED TO HOLD BRICKS IN PLACE USE EDGING SHOWN ON SHEET 1213, STD. DWG. 2301, BRICK SIDEWALK DETAIL.

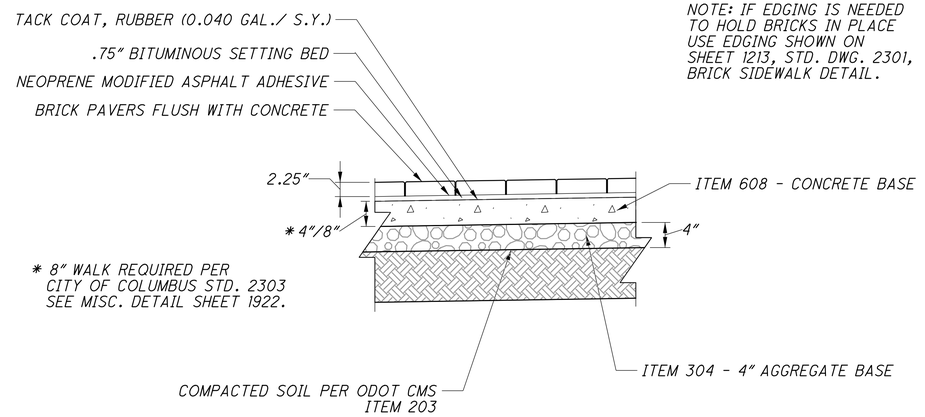

* 8" WALK REQUIRED PER CITY OF COLUMBUS STD. 2303 SEE MISC. DETAIL SHEET 1922.

ITEM 608 - WALKWAY MISC: BRICK PAVER WALK, AS PER PLAN

SEE ITEM 608 - WALKWAY, MISC.: BRICK PAVER CROSSWALK, AS PER PLAN FOR MATERIAL NOTES, WITH THE EXCEPTION OF NOTE 5 ON THIS SHEET.

ITEM 608 - WALKWAY, MISC.: BRICK PAVER WALK, AS PER PLAN SHALL BE PLACED IN LOCATIONS SHOWN ON PLAN SHEETS AND MISC. DETAIL SHEETS.

CONCRETE BASE, CONCRETE APRON AROUND STRUCTURES, AGGREGATE BASE, SUBGRADE COMPACTION AND APPURTENANCES SHALL BE INCLUDED IN ITEM 608 - WALKWAY, MISC.: BRICK PAVER WALK, AS PER PLAN.

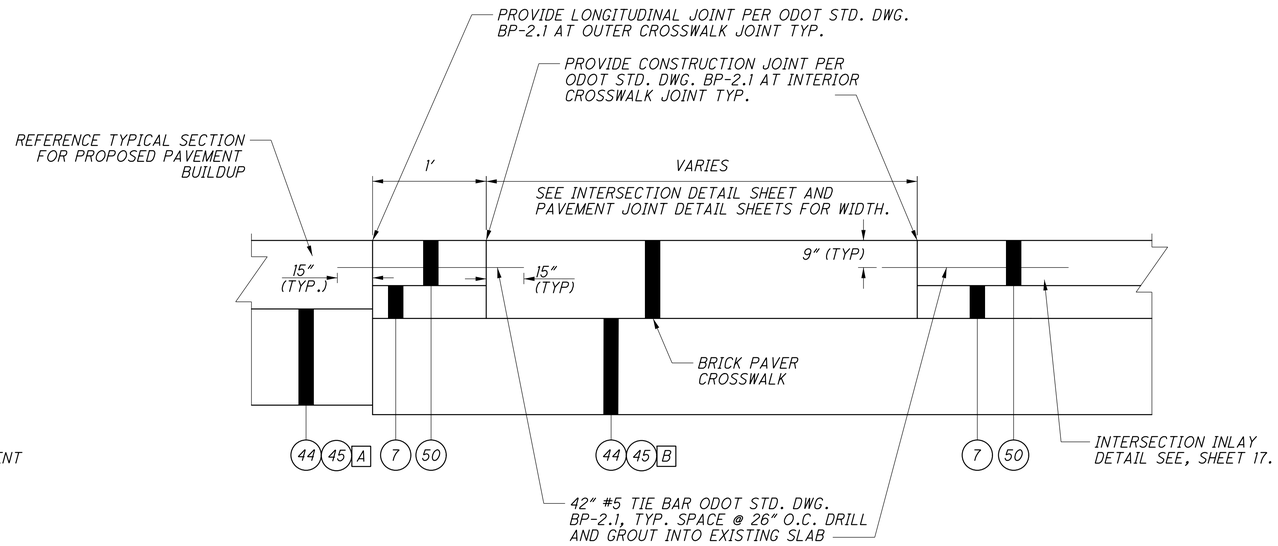

ITEM 452 - 12" NON-REINFORCED CONCRETE PAVEMENT TYPICAL CONCRETE BAND SECTION AT CROSS WALKS

ALL COSTS ASSOCIATED WITH THE FORMING AND CONSTRUCTION OF THE CONCRETE CROSSWALK BANDS SHALL BE INCLUDED IN ITEM 452 - 12" NON-REINFORCED CONCRETE PAVEMENT.

SEE SHEET 17 FOR ITEM LEGEND.

CALCULATED | CHECKED

BRICK CROSSWALK AND BRICK WALK

MISC. DETAILS - BRIC

FRA-70-14.54

1113
2317

PLOT.CEL
ms consultants, inc.
msconsultants.com
www.msconsultants.com
Ohio DOT Workspace
70\71 East Interchange 2E
1"
0
0.5"
ODF: ohdot\V8i
PCF: 60-06634_2E_Columbus
Batchplot Spec: \\msconsultants.com\files\production\03\60\06634_2E\standards\plotdr\batchplt.spc
Pen Table: N:\03\60\06634_2E\standards\tables\V8i_ms_std_06634_2D_Plan View.tbl
Plot Driver: \\msconsultants.com\files\Standards\usetn\ohdot\v8i\ms\plotting\PDF.pltcfg
34" x 22"
Model: Sheet @ 9:02:31 AM View: FENCE_VIEW1
Printed: 6/19/2018 By: jdougas
File: N:\03\60\06634_2E\roadway\sheets\1053226M007.dgn

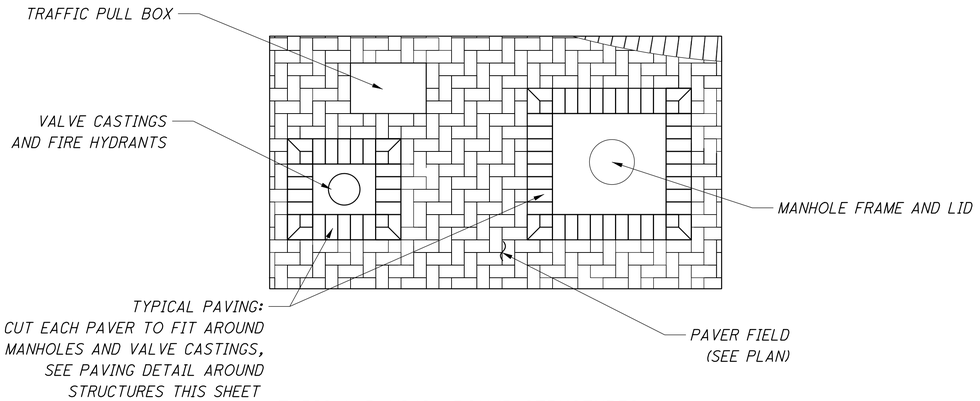

TYPICAL PAVING AROUND STRUCTURES

NTS

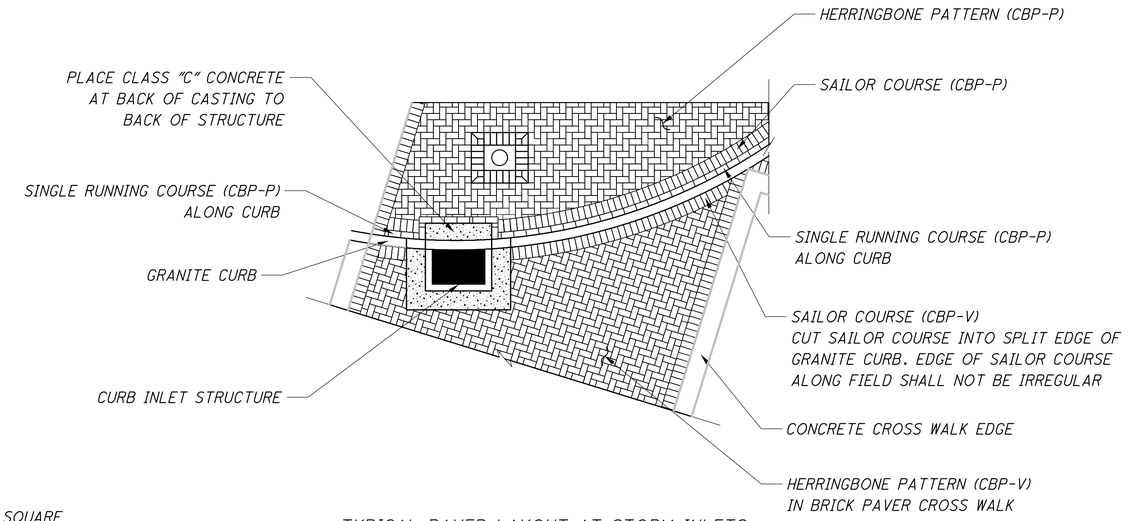

TYPICAL PAVER LAYOUT AT STORM INLETS

NTS

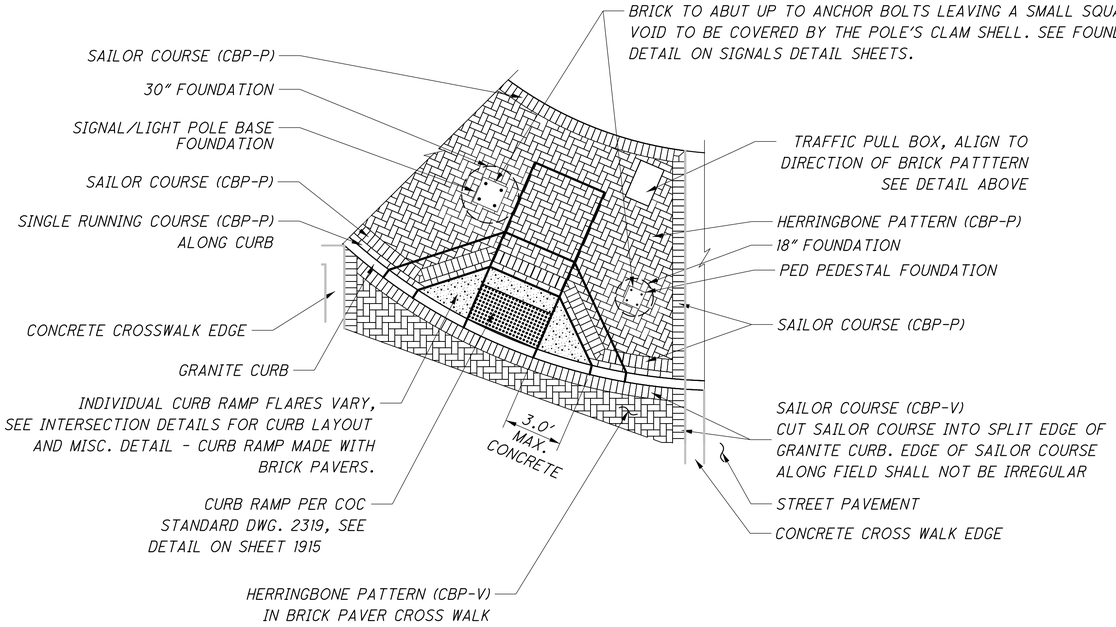

TYPICAL PAVER PATTERN LAYOUT AT CURB RAMPS

NTS

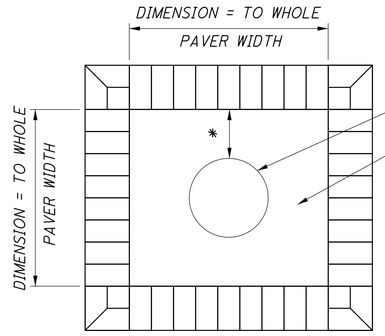

PAVING DETAIL AROUND STRUCTURES

NTS

NOTES:

1. FACE OF GRANITE CURB IS IRREGULAR. SAILOR COURSE SHALL BE CUT INTO THE CURB.
2. BRICK PIECES SMALLER THAN HALF THE SIZE OF A FULL PAVER SHALL NOT BE PERMITTED WITHOUT ODOT'S APPROVAL.
3. CONCRETE APRON AROUND STRUCTURES TO BE INCLUDED IN THE COST OF ITEM 608 - WALKWAY MISC.: BRICK PAVER WALK, AS PER PLAN (IF IN SIDEWALK), OR ITEM 608 - WALKWAY MISC.: BRICK PAVER CROSSWALK, AS PER PLAN, (IF IN CROSSWALK).

FINISH AND MATERIAL SCHEDULE

KEY	DESCRIPTION	SIZE	MANUFACTURE (BASE OF DESIGN)	MODEL / COLOR	TEXTURE / FINISH	EDGE
CBP-P	CLAY BRICK PAVER - PEDESTRIAN	4" x 8" x 2.25"	BELDEN, OR APPROVED EQUAL	REGIMENTAL / FULL RANGE	WIRE - CUT	STRAIGHT
CBP-V	CLAY BRICK PAVER - VEHICULAR	4" x 8" x 2.75"	BELDEN, OR APPROVED EQUAL	REGIMENTAL / FULL RANGE	WIRE - CUT	CHAMFERED WITH LUGS

CALCULATED | CHECKED

TYPICAL PAVER PATTERN LAYOUTS

FRA-70-14.54

1114
2317

PLOT.CEL
ms consultants, inc.
msconsultants.com
www.msconsultants.com
Ohio DOT Workspace
70\71 East Interchange 2E
0 1" 0.5"
DGN: ohdot\V8i
PCF: 60-06634_2E_Columbus
Batchplot Spec: \\msconsultants.com\files\production\03\60\06634_2E\standards\plotdrv\batchplt.spc
Pen Table: C:\Users\amcdaniel\Desktop\V8i_ms_std.tbl
Plot Driver: \\msconsultants.com\files\Standards_ustn\ohdot\v8i\ms\plotting\PDF.pltcfg
Model: Sheet
Printed: 9/27/2018 @ 11:19:17 AM
File: \\msconsultants.com\files\Production\03\60\06634_2E\structures\Wall_6W5-2\77370_6W5-2GM010.dgn
View: FENCE_VIEW1
By: amcdaniel
34" x 22"

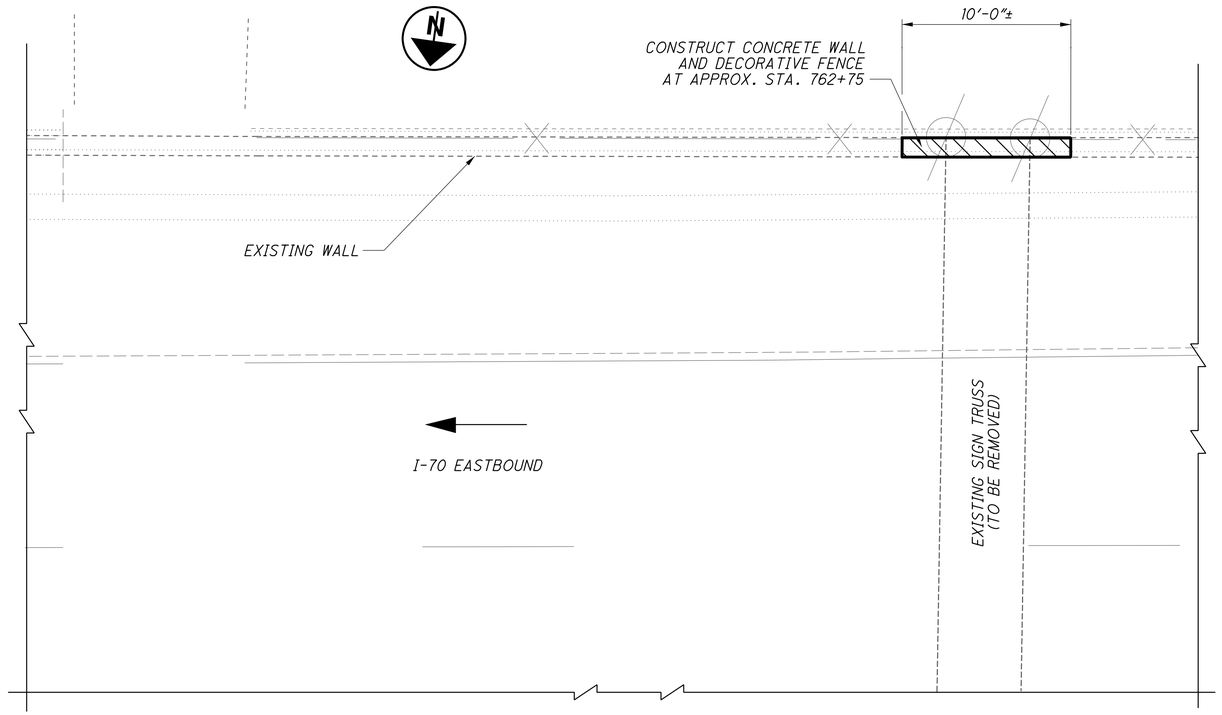

PLAN - MODIFIED EXISTING WALL

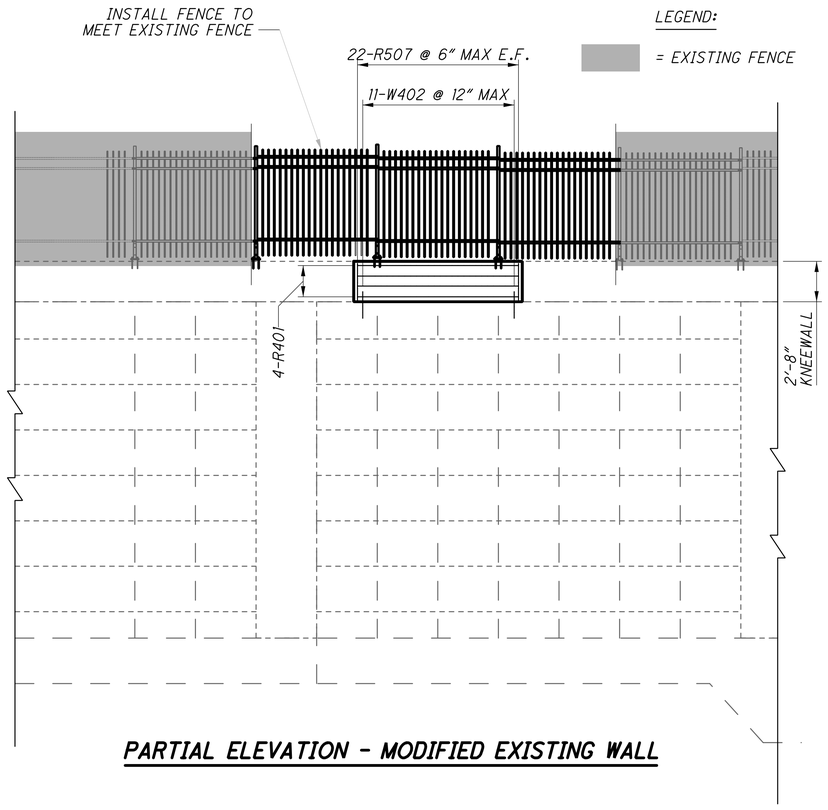

PARTIAL ELEVATION - MODIFIED EXISTING WALL

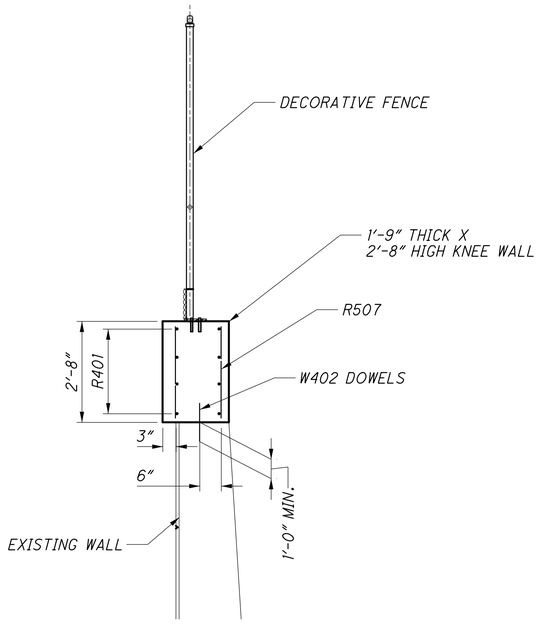

TYPICAL SECTION

MARK	NUMBER	LENGTH	WEIGHT	TYPE	DIMENSIONS					
					A	B	C	D	R	INC.
KNEE WALL BARS										
R401	8	10'-0"	54	STR						
R507	22	2'-4"	54	STR						
W402	11	2'-6"	19	STR						
TOTAL			127							

NOTES:

1. DIMENSIONS INDICATED ARE ±. MATCH EXISTING WALL AND FENCE CONSTRUCTED IN PREVIOUS PROJECT PHASE.
2. FENCE, POSTS, AND ANCHORS WERE PREVIOUSLY FABRICATED AND WILL BE MADE AVAILABLE TO THE CONTRACTOR BY THE DEPARTMENT.
3. FIELD MEASURE THE LENGTH OF WALL TO BE PLACED PRIOR TO ORDERING REINFORCING STEEL. ADJUST THE NUMBER AND LENGTH OF BARS ACCORDINGLY.
4. ALL REINFORCING STEEL SHALL BE EPOXY-COATED.
5. SEAL WALL WITH EPOXY URETHANE TO MATCH EXISTING ADJACENT WALLS.
6. ALL LABOR AND MATERIALS FOR WALL, DOWELS, REINFORCING STEEL, FENCE INSTALLATION, AND SEALING SHALL BE PAID FOR AS LUMP SUM ITEM 690 - KNEE WALL AND FENCE INSTALLATION.

CALCULATED ATM
CHECKED GLG

KNEE WALL AND FENCE INSTALLATION

FRA-70-14.54

1115
2317

PLOT.CEL
ms consultants, inc.
msconsultants.com
www.msconsultants.com
Ohio DOT Workspace
70\71 East Interchange 2E
PDF: ohdot\V8i
DGN: 60-06634_2E_Columbus
Batchplot Spec: \\msconsultants.com\files\production\Q3\60\06634_2E\standards\plotdr\batchplt.spc
Pen Table: \\msconsultants.com\files\Standards\usth\ohdot\V8\ms\plotting\pen\V8i_ms_std.tbl
Plot Driver: \\msconsultants.com\files\Standards\usth\ohdot\V8\ms\plotting\PDF.pltcfg
Model: Sheet View: FENCE_VIEW1
Printed: 6/19/2018 @ 9:02:34 AM By: jdouglas
File: N:\03\60\06634_2E\roadway\sheets\V8\I_105322GY002.dgn
34" x 22"

CL STATION	SIDE	TYPE	A	X1	X2	X3	X4	B	Y1	Y2	Y3	Y3 AREA PAVEMENT BUILDUP	TREE LAWN
MOOBERRY ST.													
894+62.60	RT	COMM.	894+98.58	20.00	12.17	12.23	20.00	894+34.88	0.00	0.00	19.91	ASPHALT	Y
895+12.33	RT	COMM.	895+31.58	8.00	10.94	10.94	8.00	894+91.73	3.14	6.04	5.98	CONCRETE	Y/N
897+95.19	RT	COMM.	898+27.93	20.00	12.25	11.50	20.00	897+64.17	0.00	0.00	24.45	ASPHALT	N
900+53.45	RT	COMM.	900+92.87	24.00	12.10	12.01	20.00	900+22.74	0.00	0.00	30.33	ASPHALT	N

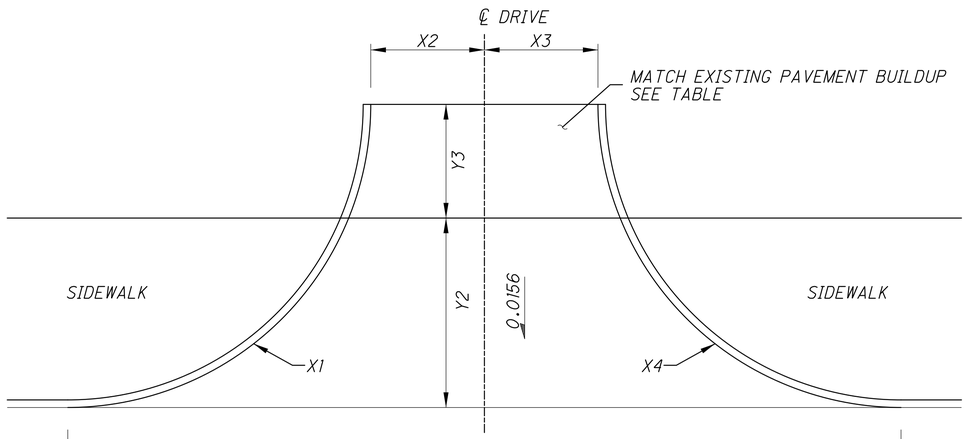

RADIAL DRIVE WITH CURB, WITHOUT DRIVE APRON
MOOBERRY 894+62.60
MOOBERRY 897+95.19
MOOBERRY 900+53.45

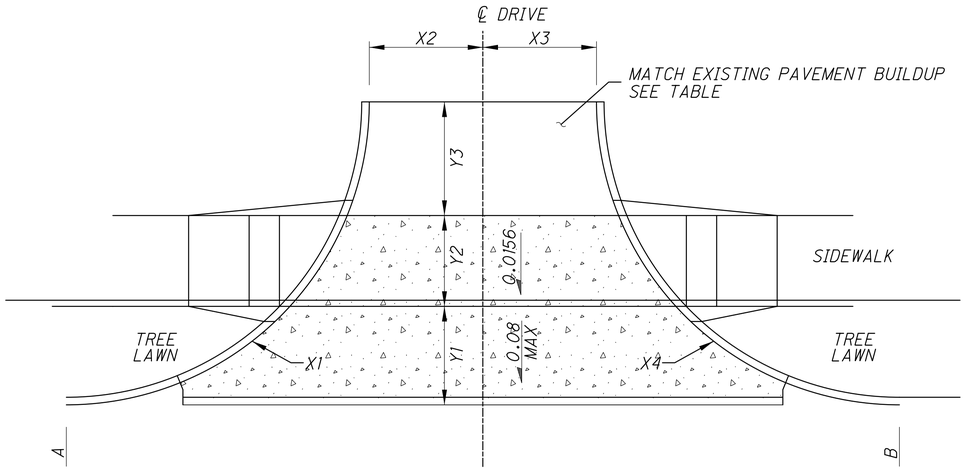

RADIAL DRIVE WITH TREE LAWN DETAIL
MOOBERRY 895+12.33

LEGEND

1. ITEM 452 - 6" NON-REINFORCED CONCRETE PAVEMENT
2. ITEM 441 - 3" ASPHALT CONCRETE INTERMEDIATE COURSE, TYPE 2, PG64-22 (448)
4. ITEM 304 - 6" AGGREGATE BASE
5. ITEM 452 - 8" NON-REINFORCED CONCRETE PAVEMENT
6. ITEM 441 - 4" ASPHALT CONCRETE SURFACE COURSE, TYPE 1, PG64-22 (448)
7. ITEM 304 - 8" AGGREGATE BASE
8. ITEM 204 - SUBGRADE COMPACTION

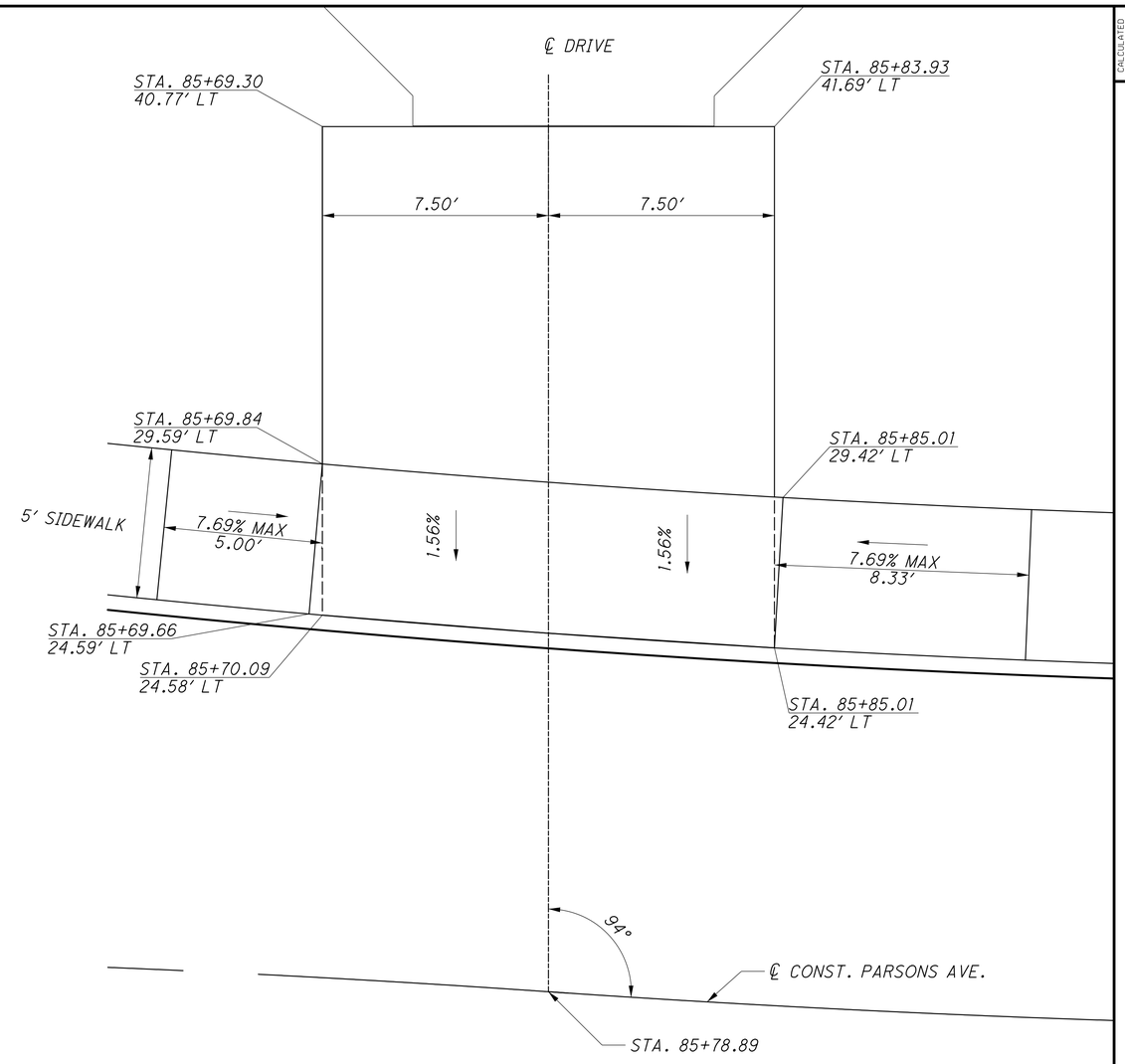

PARSONS AVE. DRIVE DETAIL
PARSON AVE. 85+78.89 LT
NTS

NOTE: FOR DRIVEWAY WIDTHS BEYOND BACK OF WALK, SEE PLAN AND PROFILE SHEETS.

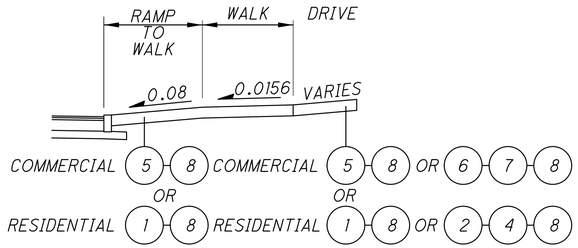

NOTE: ALL CITY STREETS DRIVEWAY LAYOUTS AND PAVEMENT BUILDUP SHALL FOLLOW THE CITY OF COLUMBUS STANDARD DRAWINGS. SEE CITY OF COLUMBUS STANDARD DRAWINGS ON SHEETS 1205-1213, MISC. DETAILS - DRIVEWAY DETAILS. THE CITY OF COLUMBUS DETAILS, IN PHASE 2E, SHALL APPLY FOR THE FOLLOWING STREETS:
- MOOBERRY ST.

CALCULATED AMF
CHECKED CSR

DRIVE DETAILS

FRA-70-14.54

1116
2317

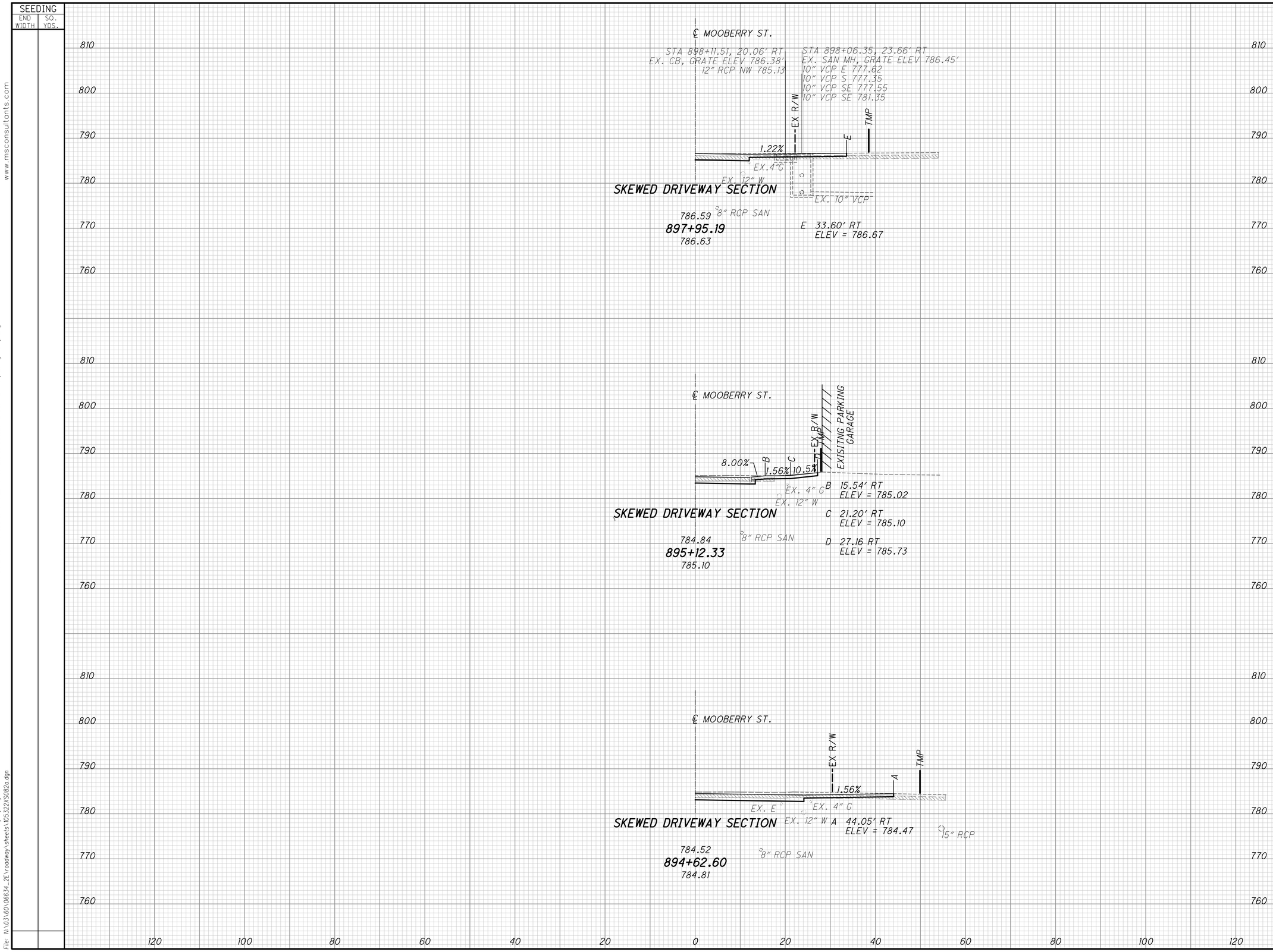

END AREA		VOLUME	
CUT	FILL	CUT	FILL

CALCULATED MAH
CHECKED BSB

DRIVE DETAILS - MOOBERRY ST.
STA. 894+62.60 TO STA. 897+95.19

FRA-70-14.54

1117
2317

ms consultants, inc.

PLOT.CEL

ms consultants, inc.
msconsultants.com

Ohio DOT Workspace
70\71 East Interchange 2E
www.msconsultants.com

Batchplot Spec: \\msconsultants.com\files\production\03\60\06634_2E\standards\plotdrv\batchplt.spc
Pen Table: \\msconsultants.com\files\Standards\ustn\ohdot\V8i\ms\plotting\pen\V8i_ms_std.tbl
Plot Driver: \\msconsultants.com\files\Standards\ustn\ohdot\v8i\ms\plotting\PDF.pltcfg

34" x 22"

View: FENCE_VIEW1
By: jdouglas
Model: Sheet
Printed: 6/19/2018 @ 9:02:36 AM
File: N:\03\60\06634_2E\roadway\sheets\105322XS082a.dgn

PLOT.CEL

ms consultants, inc.
msconsultants.com

www.msconsultants.com

Ohio DOT Workspace
70\71 East Interchange 2E

0 0.5" 1"

34" x 22"

Batchplot Spec: \\msconsultants.com\files\production\03\60\06634_2E\standards\plotdrv\batchplt.spc
Pen Table: \\msconsultants.com\files\Standards\usth\ohdot\V8i\ms\plotting\pen\V8i_ms_std.tbl
Plot Driver: \\msconsultants.com\files\Standards\usth\ohdot\v8i\ms\plotting\PDF.pltcfg
PCF: ohdotV8i
PCF: 60-06634_2E_Columbus

Model: Sheet
Printed: 6/19/2018 @ 9:02:35 AM
File: N:\03\60\06634_2E\roadway\sheets\105322X3082b.dgn
View: FENCE_VIEW1
By: jdouglas

SEEDING	
END WIDTH	SQ. YDS.

END AREA	
CUT	FILL

VOLUME	
CUT	FILL

CALCULATED MAH
CHECKED BSB

SEE SHEET 1145
FOR SITE GRADING

℄ TRANS PARSONS AVE.

3.85% 6.67% 1.56%

D C B

EX. ELEC

B 24.42' LT
ELEV = 773.28

C 30.22' LT
ELEV = 773.37

D 41.24' LT
ELEV = 774.11

773.56
85+78.89
773.77

SKEWED DRIVEWAY CROSS-SECTION

℄ MOOBERRY ST.

EX R/W

TMP

F G

1.56% 1.65%

EX. E
EX. 12" W

SKEWED DRIVEWAY SECTION

F 19.12' RT
ELEV = 787.70

G 42.34' RT
ELEV = 788.09

787.78
900+53.45
787.71

CEMENT STABILIZATION 16"

810 800 790 780 770 760

120 100 80 60 40 20 0 20 40 60 80 100 120

DRIVE DETAILS - MOOBERRY ST. / PARSONS AVE.
STA. 900+53.45 / STA. 85+78.89

FRA-70-14.54

1118
2317

ms consultants, inc.

PLOT.CEL

ms consultants, inc.
msconsultants.com

Ohio DOT Workspace
70\71 East Interchange 2E
www.msconsultants.com

0 0.5" 1"

Batchplot Spec: \\msconsultants.com\files\production\03\60\06634_2E\standards\plotdrv\batchplt.spc PCF: ohdot1V8i
Pen Table: \\msconsultants.com\files\Standards\usth\ohdot\V8i\ms\plotting\pen\V8i_ms_std.tbl PCF: 60-06634_2E_Columbus
Plot Driver: \\msconsultants.com\files\Standards\usth\ohdot\v8i\ms\plotting\PDF.pltcfg

Model: Sheet View: FENCE_VIEW1
Printed: 6/19/2018 @ 9:02:43 AM By: jdouglas
File: N:\03\60\06634_2E\roadway\sheets\105226A002.dgn

34" x 22"

LEGEND

- (A) PRESSURE RELIEF JOINT TYPE "A" AS PER BP-2.3
- (C) CONTRACTION JOINT, AS PER BP-2.2
- (D) EXPANSION JOINT (WITHOUT DOWELS), AS PER BP-2.2
- (E) EXPANSION JOINT, AS PER BP-2.2
- (L) STANDARD LONGITUDINAL JOINT WITH TIE BARS, AS PER BP-2.1
- (M) CONSTRUCTION JOINT, AS PER BP-2.2 "SEE MOT PLAN SHEETS"
- (S) STANDARD LONGITUDINAL JOINT WITHOUT TIE BARS, AS PER BP-2.1
- (Y) BUTT JOINT BETWEEN EXISTING PAVEMENT AND PROPOSED PAVEMENT, A DOWELLED TYPE Y JOINT, AS PER BP-2.5 SHALL BE PROVIDED.

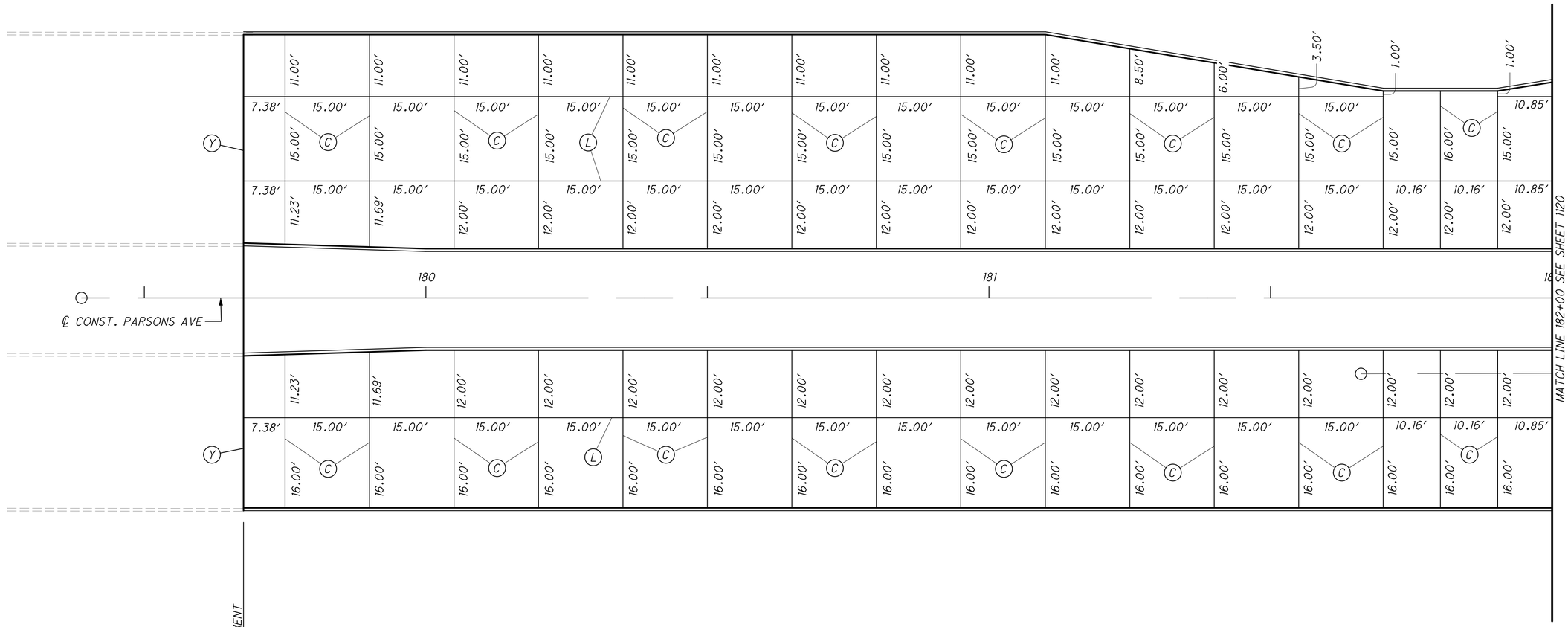

HORIZONTAL SCALE IN FEET
0 5 10 20

CALCULATED | CHECKED

PAVEMENT JOINT DETAIL
PARSONS AVE. - STA. 179+50 TO STA. 182+00

FRA-70-14.54

1119
2317

PLOT.CEL

ms consultants, inc.
msconsultants.com

Ohio DOT Workspace
70\71 East Interchange 2E
www.msconsultants.com

Batchplot Spec: \\msconsultants.com\files\production\03\60\06634_2E\standards\plotdir\batchplt.spc
Pen Table: \\msconsultants.com\files\Standards\ustn\ohdot\V8i\ms\plotting\pen\V8i_ms_std.tbl
Plot Driver: \\msconsultants.com\files\Standards\ustn\ohdot\v8i\ms\plotting\PDF.pltcfg

PCF: ohdotV8i
PCF: 60-06634_2E_Columbus

Model: Sheet
Printed: 6/19/2018 @ 9:02:44 AM
File: N:\03\60\06634_2E\roadway\sheets\1053220A003.dgn

View: FENCE_VIEW1
By: jdoughas

34" x 22"

NOTE

[1] REFER TO THE BRICK PAVER CROSSWALK DETAIL SHEET FOR ELEVATION DIFFERENCES IN THE CONCRETE PAVEMENT.

LEGEND

- (A) PRESSURE RELIEF JOINT TYPE "A" AS PER BP-2.3
- (C) CONTRACTION JOINT, AS PER BP-2.2
- (D) EXPANSION JOINT (WITHOUT DOWELS), AS PER BP-2.2
- (E) EXPANSION JOINT, AS PER BP-2.2
- (L) STANDARD LONGITUDINAL JOINT WITH TIE BARS, AS PER BP-2.1
- (M) CONSTRUCTION JOINT, AS PER BP-2.2 "SEE MOT PLAN SHEETS"
- (S) STANDARD LONGITUDINAL JOINT WITHOUT TIE BARS, AS PER BP-2.1
- (Y) BUTT JOINT BETWEEN EXISTING PAVEMENT AND PROPOSED PAVEMENT, A DOWELLED TYPE Y JOINT, AS PER BP-2.5 SHALL BE PROVIDED.

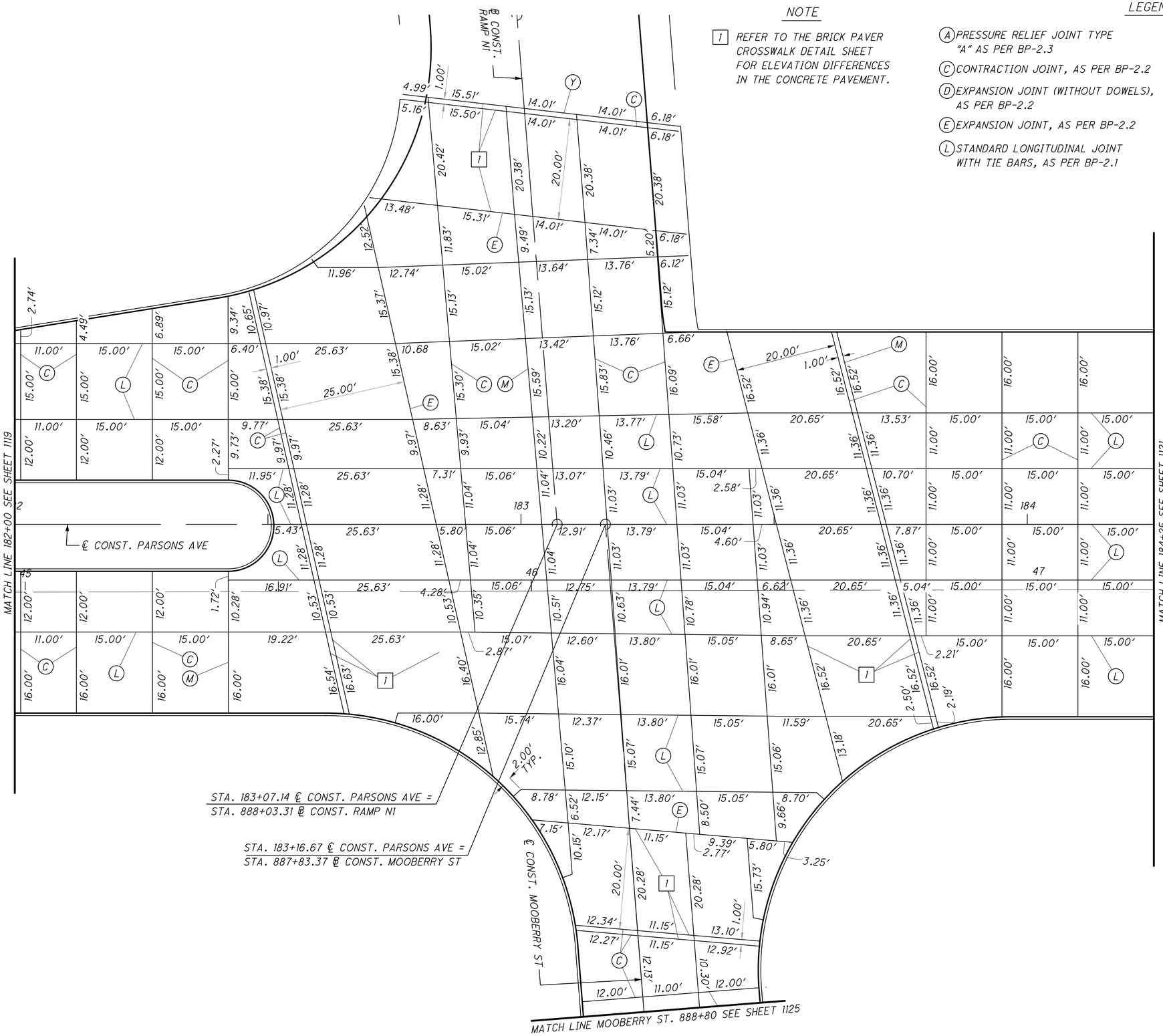

HORIZONTAL SCALE IN FEET
0 5 10 20

CALCULATED | CHECKED

PAVEMENT JOINT DETAIL - PARSONS/RAMP N1 & MOOBERRY ST - STA. 182+00 TO STA. 184+25

FRA-70-14.54

1120
2317

ms consultants, inc.

PLOT.CEL

ms consultants, inc.
msconsultants.com

www.msconsultants.com

Ohio DOT Workspace
70\71 East Interchange 2E

1"
0.5"
0

Batchplot Spec: \\msconsultants.com\files\production\03\60\06634.2E\standards\plotdrv\batchplt.SPC
Pen Table: \\msconsultants.com\files\Standards\usth\ohdot\V8i\ms\plotting\pen\V8i_ms_std.tbl PLOT: ohdotV8i
Plot Driver: \\msconsultants.com\files\Standards\usth\ohdot\v8i\ms\plotting\PDF.pltcfg PLOT: 60-06634_2E_Columbus

Model: Sheet @ 9:02:46 AM View: SHEET
Printed: 6/19/2018 By: jdouglas
File: N:\03\60\06634_2E\roadway\sheets\05322604004.dgn

34" x 22"

LEGEND

- (A) PRESSURE RELIEF JOINT TYPE "A" AS PER BP-2.3
- (C) CONTRACTION JOINT, AS PER BP-2.2
- (D) EXPANSION JOINT (WITHOUT DOWELS), AS PER BP-2.2
- (E) EXPANSION JOINT, AS PER BP-2.2
- (L) STANDARD LONGITUDINAL JOINT WITH TIE BARS, AS PER BP-2.1
- (M) CONSTRUCTION JOINT, AS PER BP-2.2 "SEE MOT PLAN SHEETS"
- (S) STANDARD LONGITUDINAL JOINT WITHOUT TIE BARS, AS PER BP-2.1
- (Y) BUTT JOINT BETWEEN EXISTING PAVEMENT AND PROPOSED PAVEMENT, A DOWELLED TYPE Y JOINT, AS PER BP-2.5 SHALL BE PROVIDED.

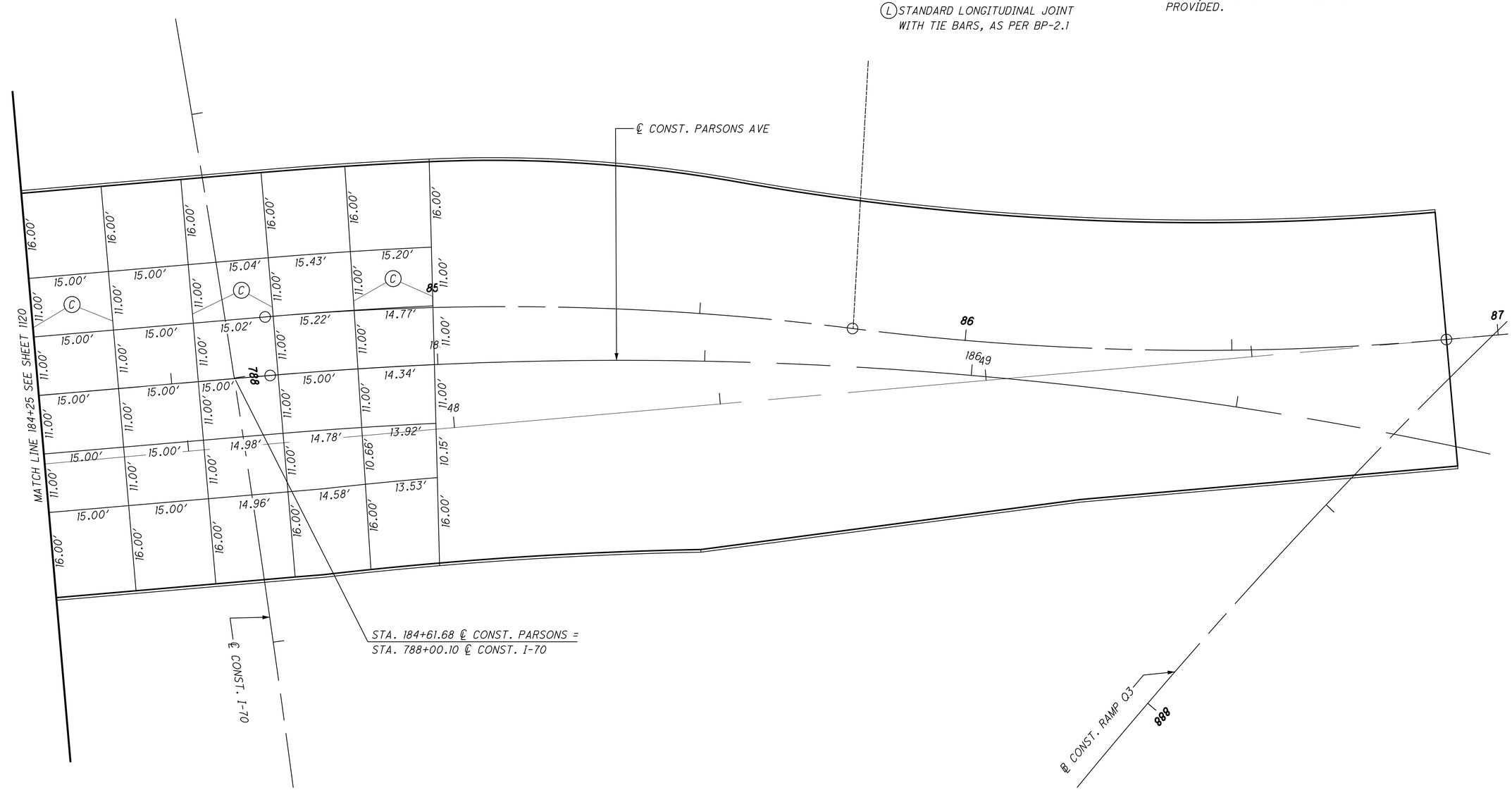

N

0 5 10 20
HORIZONTAL SCALE IN FEET

CALCULATED | CHECKED

PAVEMENT JOINT DETAIL
PARSONS AVE - STA. 184+25 TO STA. 186+50

FRA-70-14.54

1121
2317

PLOT.CEL

ms consultants, inc.
msconsultants.com

www.msconsultants.com

Ohio DOT Workspace
70\71 East Interchange 2E

1"
0.5"
0

Batchplot Spec: \\msconsultants.com\files\production\03\60\06634_2E\standards\plotdrv\batchplt.spc
Pen Table: \\msconsultants.com\files\Standards\astm\ohdot\V8i\ms\plotting\pen\V8i_ms_std.tbl
Plot Driver: \\msconsultants.com\files\Standards\astm\ohdot\v8i\ms\plotting\PDF.pltcfg
PDF: ohdot\V8i
PCF: 60-06634_2E_Columbus

34" x 22"

Model: Sheet
Printed: 6/19/2018 @ 9:02:48 AM
File: N:\03\60\06634_2E\roadway\sheets\105322GA021.dgn
View: FENCE_VIEW1
By: jdougas

LEGEND

- (A) PRESSURE RELIEF JOINT TYPE "A" AS PER BP-2.3
- (C) CONTRACTION JOINT, AS PER BP-2.2
- (D) EXPANSION JOINT (WITHOUT DOWELS), AS PER BP-2.2
- (E) EXPANSION JOINT, AS PER BP-2.2
- (L) STANDARD LONGITUDINAL JOINT WITH TIE BARS, AS PER BP-2.1
- (M) CONSTRUCTION JOINT, AS PER BP-2.2 "SEE MOT PLAN SHEETS"
- (S) STANDARD LONGITUDINAL JOINT WITHOUT TIE BARS, AS PER BP-2.1
- (Y) BUTT JOINT BETWEEN EXISTING PAVEMENT AND PROPOSED PAVEMENT, A DOWELLED TYPE Y JOINT, AS PER BP-2.5 SHALL BE PROVIDED.

HORIZONTAL SCALE IN FEET
0 5 10 20

CALCULATED | CHECKED

PAVEMENT JOINT DETAIL

FULTON & THIRD - STA. 31+50 TO STA. 33+00

FRA-70-14.54

1122
2317

PLOT.CEL

ms consultants, inc.
msconsultants.com

www.msconsultants.com

Ohio DOT Workspace
70\71 East Interchange 2E

0 1" 0.5"

Batchplot Spec: \\msconsultants.com\files\production\03\60\06634_2E\standards\plotdrv\batchplt.spc
Pen Table: \\msconsultants.com\files\Standards\ustn\ohdot\V8i\ms\plotting\pen\V8i_ms_std.tbl PCF: ohdotV8i
Plot Driver: \\msconsultants.com\files\Standards\ustn\ohdot\V8i\ms\plotting\PDF.pltcfg PCF: 60-06634_2E_Columbus

Model: Sheet
Printed: 6/19/2018 @ 9:02:50 AM View: FENCE_VIEW1
By: jdouglas
File: N:\03\60\06634_2E\roadway\sheets\05322GA022.dgn

34" x 22"

LEGEND

- (A) PRESSURE RELIEF JOINT TYPE "A" AS PER BP-2.3
- (C) CONTRACTION JOINT, AS PER BP-2.2
- (D) EXPANSION JOINT (WITHOUT DOWELS), AS PER BP-2.2
- (E) EXPANSION JOINT, AS PER BP-2.2
- (L) STANDARD LONGITUDINAL JOINT WITH TIE BARS, AS PER BP-2.1
- (M) CONSTRUCTION JOINT, AS PER BP-2.2 "SEE MOT PLAN SHEETS"
- (S) STANDARD LONGITUDINAL JOINT WITHOUT TIE BARS, AS PER BP-2.1
- (Y) BUTT JOINT BETWEEN EXISTING PAVEMENT AND PROPOSED PAVEMENT, A DOWELLED TYPE Y JOINT, AS PER BP-2.5 SHALL BE PROVIDED.

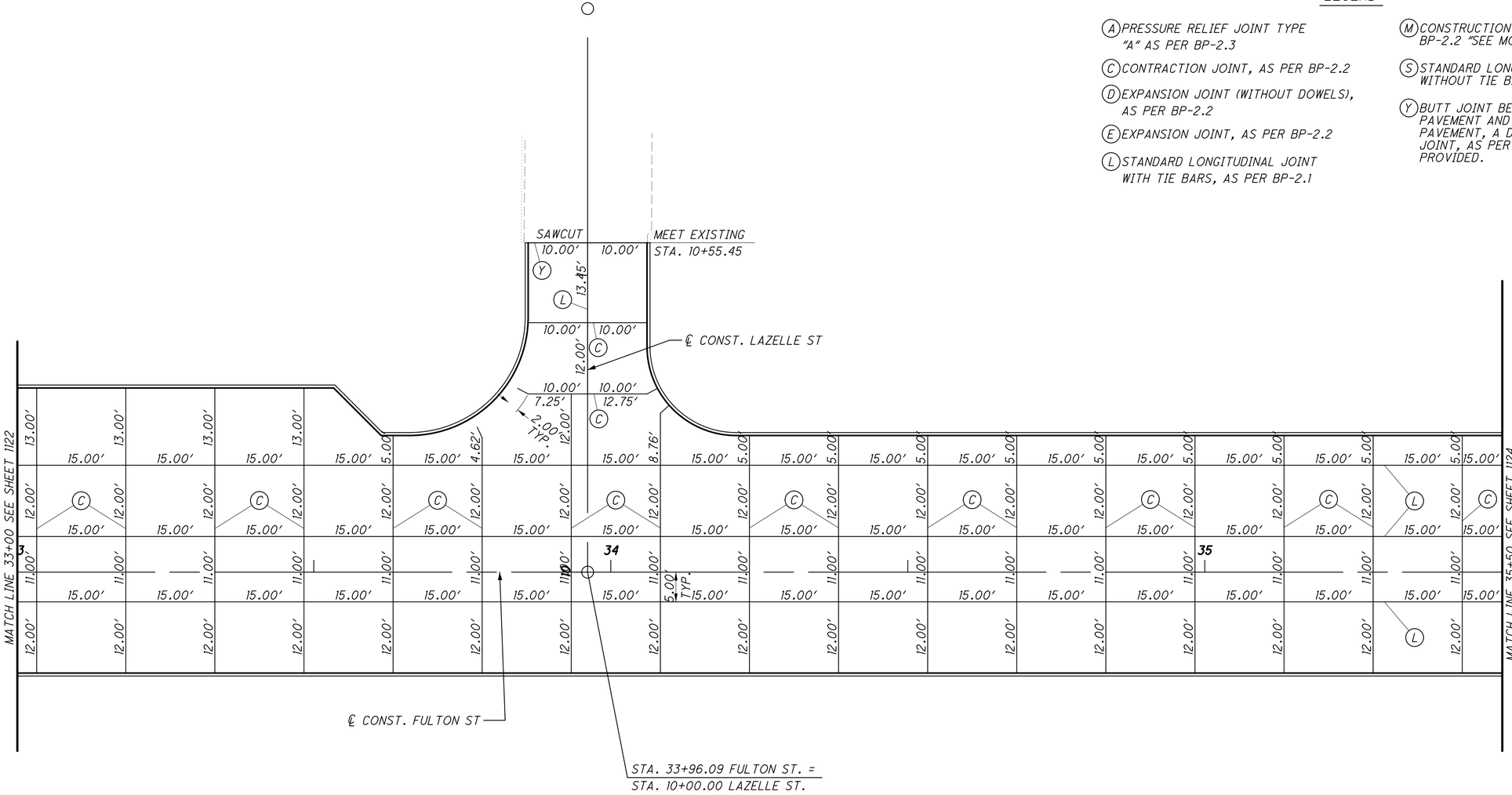

HORIZONTAL SCALE IN FEET
0 5 10 20

CALCULATED | CHECKED

PAVEMENT JOINT DETAIL
FULTON ST - STA. 33+00 TO STA. 35+50

FRA-70-14.54

1123
2317

PLOT.CEL

ms consultants, inc.
msconsultants.com

Ohio DOT Workspace
70\71 East Interchange 2E

www.msconsultants.com

0 0.5" 1"

Batchplot Spec: \\msconsultants.com\files\production\03\60\06634.2E\standards\olotdr\batchplt.SPC
Pen Table: \\msconsultants.com\files\Standards\astm\ohdot\V8i\ms\plotting\pen\V8i_ms_std.tbl PCF: ohdotV8i
Plot Driver: \\msconsultants.com\files\Standards\astm\ohdot\v8i\ms\plotting\PDF.pltcfg PCF: 60-06634_2E_Columbus

Model: Sheet
Printed: 8/15/2018 @ 1:38:26 PM View: SHEET
File: \\msconsultants.com\files\Production\03\60\06634.2E\roadway\sheets\1053226A023.dgn By: dhall

34" x 22"

NOTE

1 REFER TO THE BRICK PAVER CROSSWALK DETAIL SHEET FOR ELEVATION DIFFERENCES IN THE CONCRETE PAVEMENT.

LEGEND

- (A) PRESSURE RELIEF JOINT TYPE "A" AS PER BP-2.3
- (C) CONTRACTION JOINT, AS PER BP-2.2
- (D) EXPANSION JOINT (WITHOUT DOWELS), AS PER BP-2.2
- (E) EXPANSION JOINT, AS PER BP-2.2
- (L) STANDARD LONGITUDINAL JOINT WITH TIE BARS, AS PER BP-2.1
- (M) CONSTRUCTION JOINT, AS PER BP-2.2 "SEE MOT PLAN SHEETS"
- (S) STANDARD LONGITUDINAL JOINT WITHOUT TIE BARS, AS PER BP-2.1
- (Y) BUTT JOINT BETWEEN EXISTING PAVEMENT AND PROPOSED PAVEMENT, A DOWELLED TYPE Y JOINT, AS PER BP-2.5 SHALL BE PROVIDED.

MEET EXISTING PAVEMENT
STA. 155+20.00

MEET EXISTING PAVEMENT
STA. 37+50.00

+87.12

+00.35

+57.08 (Fourth)

2.00' TYP.

ASPHALT BUILDUP

SAWCUT

PROPOSED BUS PAD

MATCH LINE 35+50 SEE SHEET 1123

℄ CONST. FULTON ST

℄ CONST. FOURTH ST

STA. 36+42.11 ℄ CONST. FULTON ST =
STA. 154+30.37 ℄ CONST. FOURTH ST

36 37 38 155 154

HORIZONTAL SCALE IN FEET
0 5 10 20

CALCULATED | CHECKED

PAVEMENT JOINT DETAIL
FULTON ST - STA. 35+50 TO STA. 37+50

FRA-70-14.54

1124
2317

ms consultants, inc.

PLOT.CEL

ms consultants, inc.
msconsultants.com

Ohio DOT Workspace
70\71 East Interchange 2E
PLOT: 60-06634_2E_Columbus

PDF: ohdot\V8i
PLOT: 60-06634_2E_Columbus

Batchplot Spec: \\msconsultants.com\Files\Production\03\60\06634_2E\standards\plotdr\batchplt.spc
Pen Table: \\msconsultants.com\Files\Standards\ustn\ohdot\V8i\ms\plotting\pen\V8i_ms_std.tbl
Plot Driver: \\msconsultants.com\Files\Standards\ustn\ohdot\v8i\ms\plotting\PDF.pltcfg

Model: Sheet
Printed: 6/19/2018 @ 9:02:53 AM
File: N:\03\60\06634_2E\roadway\sheets\1053226A034.dgn

View: FENCE_VIEW1
By: jdougas

34" x 22"

www.msconsultants.com

LEGEND

- (A) PRESSURE RELIEF JOINT TYPE "A" AS PER BP-2.3
- (C) CONTRACTION JOINT, AS PER BP-2.2
- (D) EXPANSION JOINT (WITHOUT DOWELS), AS PER BP-2.2
- (E) EXPANSION JOINT, AS PER BP-2.2
- (L) STANDARD LONGITUDINAL JOINT WITH TIE BARS, AS PER BP-2.1
- (M) CONSTRUCTION JOINT, AS PER BP-2.2 "SEE MOT PLAN SHEETS"
- (S) STANDARD LONGITUDINAL JOINT WITHOUT TIE BARS, AS PER BP-2.1
- (Y) BUTT JOINT BETWEEN EXISTING PAVEMENT AND PROPOSED PAVEMENT, A DOWELLED TYPE Y JOINT, AS PER BP-2.5 SHALL BE PROVIDED.

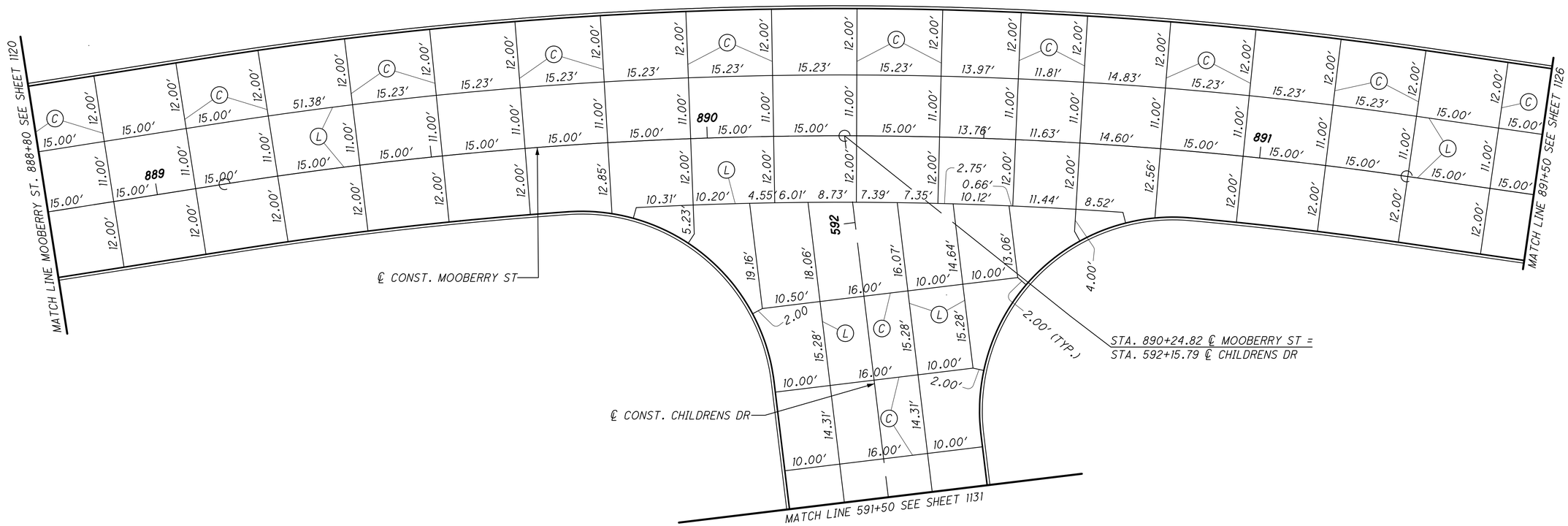

HORIZONTAL SCALE IN FEET
0 5 10 20

CALCULATED | CHECKED

PAVEMENT JOINT DETAIL
MOOBERRY ST - STA. 888+80 TO STA. 891+50

FRA-70-14.54

1125
2317

ms consultants, inc.

PLOT.CEL

ms consultants, inc.
msconsultants.com

www.msconsultants.com

Ohio DOT Workspace
70\71 East Interchange 2E

0 0.5" 1"

34" x 22"

LEGEND

- (A) PRESSURE RELIEF JOINT TYPE "A" AS PER BP-2.3
- (C) CONTRACTION JOINT, AS PER BP-2.2
- (D) EXPANSION JOINT (WITHOUT DOWELS), AS PER BP-2.2
- (E) EXPANSION JOINT, AS PER BP-2.2
- (L) STANDARD LONGITUDINAL JOINT WITH TIE BARS, AS PER BP-2.1
- (M) CONSTRUCTION JOINT, AS PER BP-2.2 "SEE MOT PLAN SHEETS"
- (S) STANDARD LONGITUDINAL JOINT WITHOUT TIE BARS, AS PER BP-2.1
- (Y) BUTT JOINT BETWEEN EXISTING PAVEMENT AND PROPOSED PAVEMENT, A DOWELLED TYPE Y JOINT, AS PER BP-2.5 SHALL BE PROVIDED.

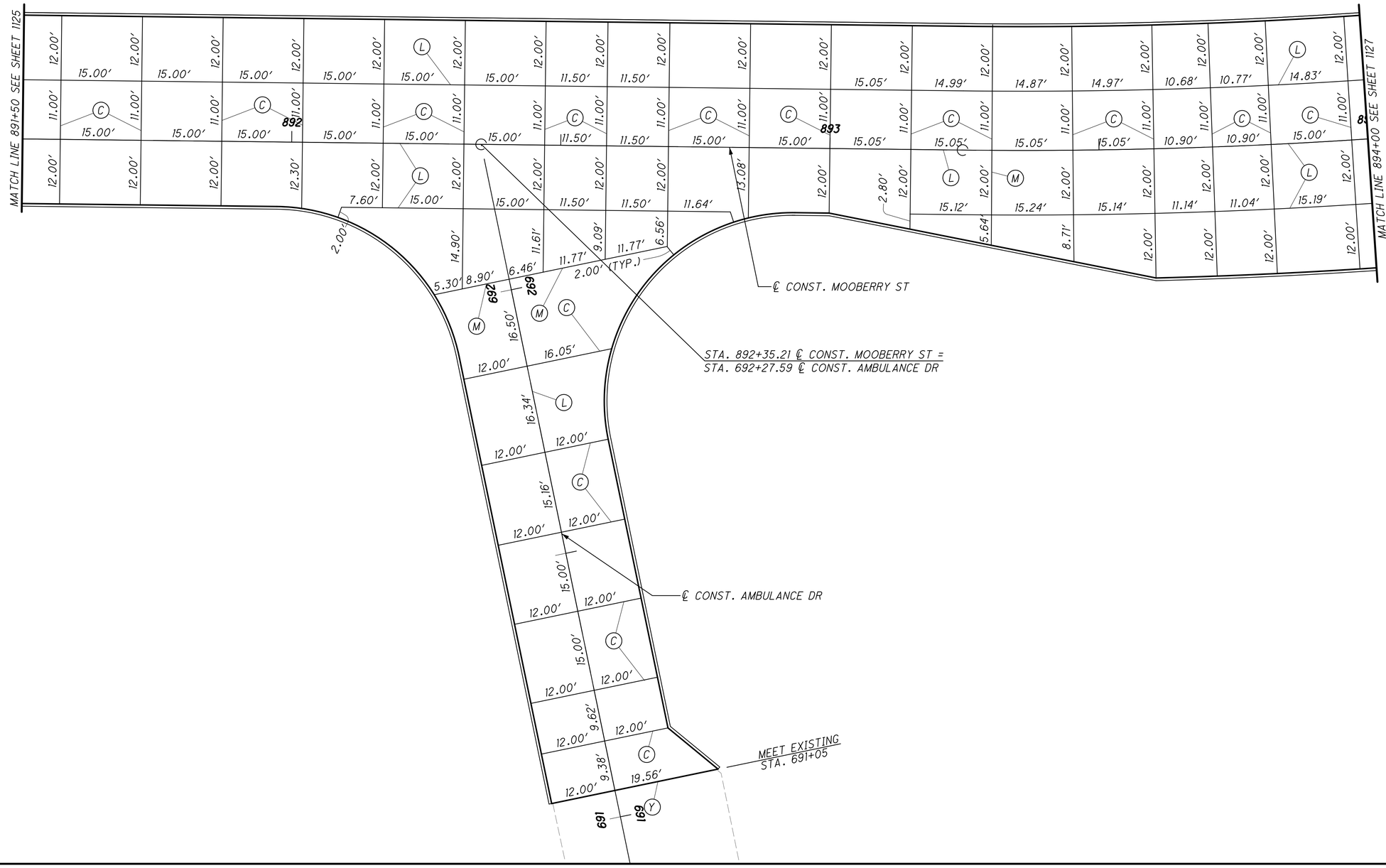

HORIZONTAL SCALE IN FEET
0 5 10 20

CALCULATED | CHECKED

PAVEMENT JOINT DETAIL
MOOBERRY & AMBULANCE - 891+50 TO 894+00

FRA-70-14.54

1126
2317

Model: Sheet
Printed: 8/15/2018 @ 1:30:47 PM
File: \\msconsultants.com\Files\Production\03\60\06634.2E\roadway\sheets\105322604035.dgn
View: SHEET
By: dhall
Batchplot Spec: \\msconsultants.com\Files\Standards\ustn\ohdot\V8\ms\plotting\pen\V8i_ms_std.pltcfg
Pen Table: \\msconsultants.com\Files\Standards\ustn\ohdot\V8\ms\plotting\pen\V8i_ms_std.tbl
Plot Driver: \\msconsultants.com\Files\Standards\ustn\ohdot\v8i\ms\plotting\PDF.pltcfg
PDF: ohdotV8i
PDF: 60-06634_2E_Columbus

ms consultants, inc.

PLOT.CEL

ms consultants, inc.
msconsultants.com

www.msconsultants.com

Ohio DOT Workspace
70\71 East Interchange 2E

0 0.5" 1"

PDF: ohdot\V8i
PLOT: 60-06634_2E_Columbus

Batchplot Spec: \\msconsultants.com\Files\Production\03\60\06634_2E\standards\plotdrv\batchplt.SPC
Pen Table: \\msconsultants.com\Files\Standards\astm\ohdot\V8\ms\plotting\pen\V8i_ms_std.tbl
Plot Driver: \\msconsultants.com\Files\Standards\astm\ohdot\v8i\ms\plotting\PDF.pltcfg

Model: Sheet
Printed: 8/15/2018 @ 1:28:48 PM View: SHEET
File: \\msconsultants.com\Files\Production\03\60\06634_2E\roadway\sheets\1053226036.dgn By: dhall

34" x 22"

LEGEND

- (A) PRESSURE RELIEF JOINT TYPE "A" AS PER BP-2.3
- (C) CONTRACTION JOINT, AS PER BP-2.2
- (D) EXPANSION JOINT (WITHOUT DOWELS), AS PER BP-2.2
- (E) EXPANSION JOINT, AS PER BP-2.2
- (L) STANDARD LONGITUDINAL JOINT WITH TIE BARS, AS PER BP-2.1
- (M) CONSTRUCTION JOINT, AS PER BP-2.2 "SEE MOT PLAN SHEETS"
- (S) STANDARD LONGITUDINAL JOINT WITHOUT TIE BARS, AS PER BP-2.1
- (Y) BUTT JOINT BETWEEN EXISTING PAVEMENT AND PROPOSED PAVEMENT, A DOWELLED TYPE Y JOINT, AS PER BP-2.5 SHALL BE PROVIDED.

N

0 5 10 20 HORIZONTAL SCALE IN FEET

CALCULATED | CHECKED

PAVEMENT JOINT DETAIL
MOOBERRY ST - STA. 894+00 TO STA. 896+50

FRA-70-14.54

1127
2317

LEGEND

- (A) PRESSURE RELIEF JOINT TYPE "A" AS PER BP-2.3
- (C) CONTRACTION JOINT, AS PER BP-2.2
- (D) EXPANSION JOINT (WITHOUT DOWELS), AS PER BP-2.2
- (E) EXPANSION JOINT, AS PER BP-2.2
- (L) STANDARD LONGITUDINAL JOINT WITH TIE BARS, AS PER BP-2.1
- (M) CONSTRUCTION JOINT, AS PER BP-2.2 "SEE MOT PLAN SHEETS"
- (S) STANDARD LONGITUDINAL JOINT WITHOUT TIE BARS, AS PER BP-2.1
- (Y) BUTT JOINT BETWEEN EXISTING PAVEMENT AND PROPOSED PAVEMENT, A DOWELLED TYPE Y JOINT, AS PER BP-2.5 SHALL BE PROVIDED.

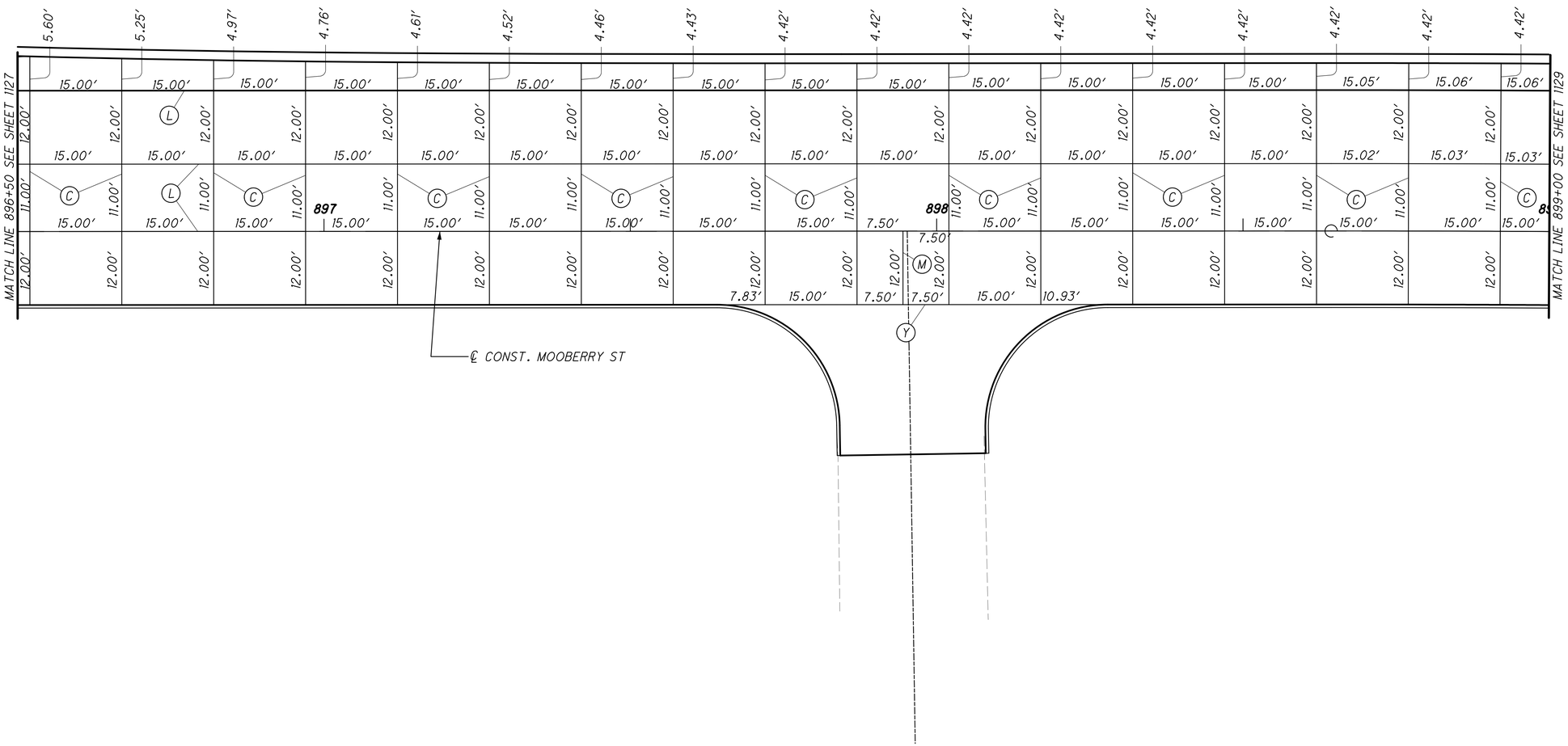

HORIZONTAL SCALE IN FEET 0 5 10 20

CALCULATED

CHECKED

PAVEMENT JOINT DETAIL
MOOBERRY ST - STA. 896+50 TO STA. 899+00

FRA-70-14.54

1128
2317

ms consultants, inc.

PLOT.CEL

ms consultants, inc.
msconsultants.com

Ohio DOT Workspace
70\71 East Interchange 2E
www.msconsultants.com

Batchplot Spec: \\msconsultants.com\files\production\03\60\06634_2E\standards\plotdrv\batchplt.spc
Pen Table: \\msconsultants.com\files\Standards\ustn\ohdot\V8i\ms\plotting\pen\V8i_ms_std.tbl
Plot Driver: \\msconsultants.com\files\Standards\ustn\ohdot\v8i\ms\plotting\PDF.pltcfg

34" x 22"

Model: Sheet
Printed: 8/15/2018 @ 1:26:11 PM
File: \\msconsultants.com\files\Production\03\60\06634_2E\roadway\sheets\105322GA037.dgn
View: SHEET
By: dhall

PLOT.CEL

ms consultants, inc.
msconsultants.com

Ohio DOT Workspace
70\71 East Interchange 2E

www.msconsultants.com

0 0.5" 1"

Batchplot Spec: \\msconsultants.com\files\production\03\60\06634_2E\standards\plotdrv\batchplt.SPC
Pen Table: \\msconsultants.com\files\Standards\astm\ohdot\V8i\ms\plotting\pen\V8i_ms_std.tbl PDF: ohdotV8i
Plot Driver: \\msconsultants.com\files\Standards\astm\ohdot\V8i\ms\plotting\PDF.plt.cfg PLOT: 60-06634_2E_Columbus

Model: Sheet
Printed: 8/15/2018 @ 1:34:05 PM View: SHEET
File: \\msconsultants.com\files\Production\03\60\06634_2E\roadway\sheets\06322GA038.dgn By: dhall

34" x 22"

LEGEND

- (A) PRESSURE RELIEF JOINT TYPE "A" AS PER BP-2.3
- (C) CONTRACTION JOINT, AS PER BP-2.2
- (D) EXPANSION JOINT (WITHOUT DOWELS), AS PER BP-2.2
- (E) EXPANSION JOINT, AS PER BP-2.2
- (L) STANDARD LONGITUDINAL JOINT WITH TIE BARS, AS PER BP-2.1
- (M) CONSTRUCTION JOINT, AS PER BP-2.2 "SEE MOT PLAN SHEETS"
- (S) STANDARD LONGITUDINAL JOINT WITHOUT TIE BARS, AS PER BP-2.1
- (Y) BUTT JOINT BETWEEN EXISTING PAVEMENT AND PROPOSED PAVEMENT, A DOWELLED TYPE Y JOINT, AS PER BP-2.5 SHALL BE PROVIDED.

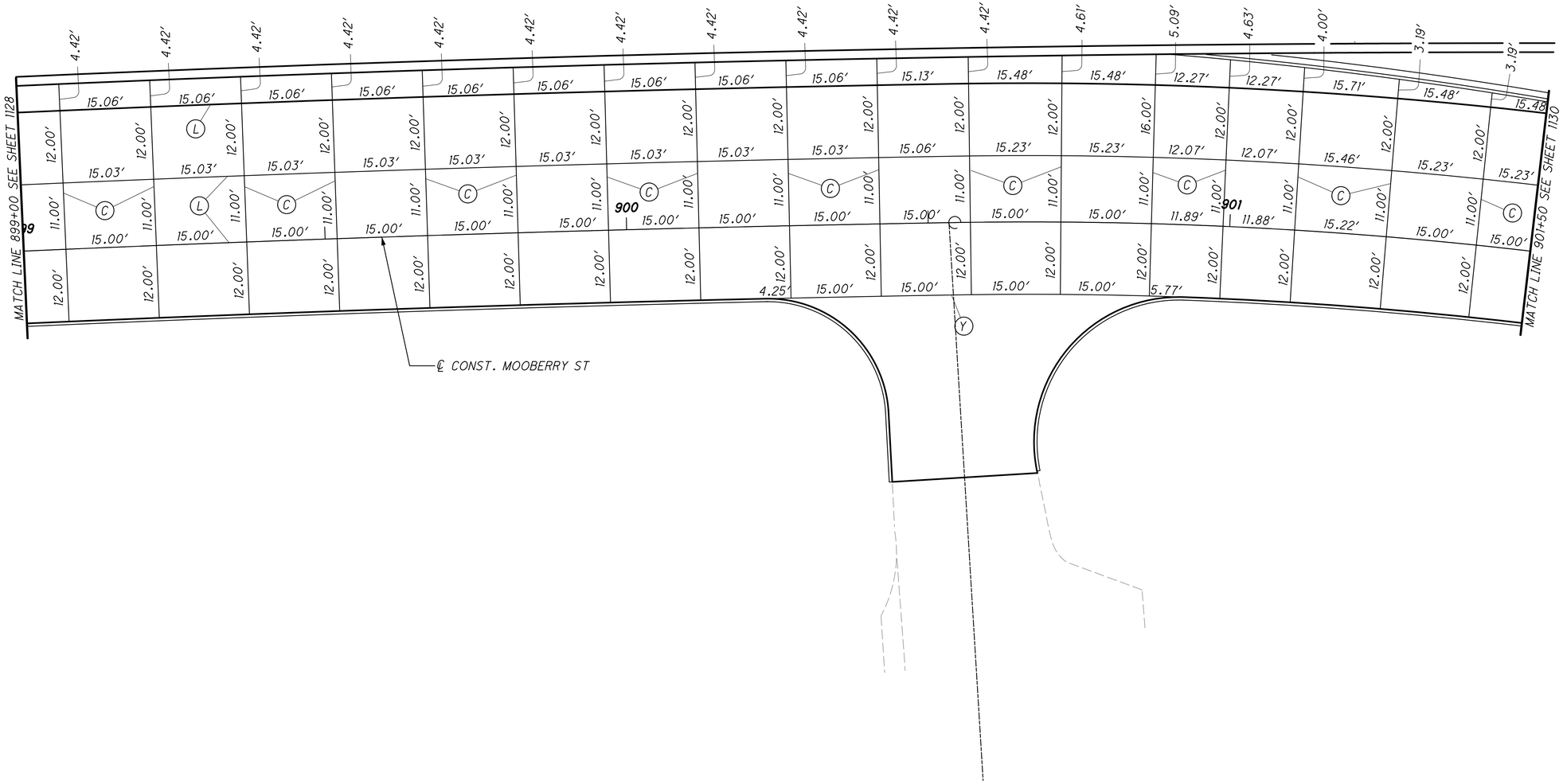

HORIZONTAL SCALE IN FEET
0 5 10 20

CALCULATED | CHECKED

PAVEMENT JOINT DETAIL
MOOBERRY ST - STA. 899+00 TO STA. 901+50

FRA-70-14.54

1129
2317

ms consultants, inc.

PLOT.CEL

ms consultants, inc.
msconsultants.com

Ohio DOT Workspace
70\71 East Interchange 2E

www.msconsultants.com

1"
0.5"
0

Batchplot Spec: \\msconsultants.com\files\Production\03\60\06634_2E\standards\plotdrv\batchplt.SPC
Pen Table: \\msconsultants.com\files\Production\03\60\06634_2E\standards\ustn\ohdot\V8i\ms\plotting\pen\V8i_ms_std.tbl PDF: ohdotV8i
Plot Driver: \\msconsultants.com\files\Production\03\60\06634_2E\standards\ustn\ohdot\v8i\ms\plotting\PDF.pltcfg PLOT: 60-06634_2E_Columbus

Model: Sheet
Printed: 8/15/2018 @ 1:35:39 PM View: SHEET
File: \\msconsultants.com\files\Production\03\60\06634_2E\roadway\sheets\1053220A039.dgn By: dhall

34" x 22"

LEGEND

- (A) PRESSURE RELIEF JOINT TYPE "A" AS PER BP-2.3
- (C) CONTRACTION JOINT, AS PER BP-2.2
- (D) EXPANSION JOINT (WITHOUT DOWELS), AS PER BP-2.2
- (E) EXPANSION JOINT, AS PER BP-2.2
- (L) STANDARD LONGITUDINAL JOINT WITH TIE BARS, AS PER BP-2.1
- (M) CONSTRUCTION JOINT, AS PER BP-2.2 "SEE MOT PLAN SHEETS"
- (S) STANDARD LONGITUDINAL JOINT WITHOUT TIE BARS, AS PER BP-2.1
- (Y) BUTT JOINT BETWEEN EXISTING PAVEMENT AND PROPOSED PAVEMENT, A DOWELLED TYPE Y JOINT, AS PER BP-2.5 SHALL BE PROVIDED.

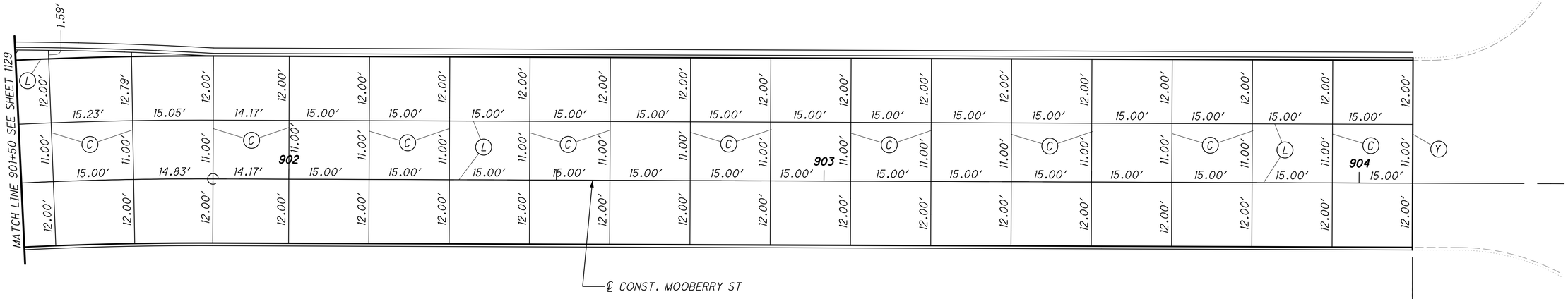

HORIZONTAL SCALE IN FEET
0 5 10 20

CALCULATED | CHECKED

PAVEMENT JOINT DETAIL
MOOBERRY ST - STA. 901+50 TO STA. 904+00

FRA-70-14.54

1130
2317

PLOT.CEL

ms consultants, inc.
msconsultants.com

www.msconsultants.com

Ohio DOT Workspace
70\71 East Interchange 2E

0 0.5" 1"

Batchplot Spec: \\msconsultants.com\files\production\03\60\06634_2E\standards\plotdrv\batchplt.spc
Pen Table: \\msconsultants.com\files\Standards\usth\ohdot\V8i\ms\plotting\pen\V8i_ms_std.tbl PCF: ohdot\V8i
Plot Driver: \\msconsultants.com\files\Standards\usth\ohdot\v8i\ms\plotting\PDF.pltcfg PCF: 60-06634_2E_Columbus

Model: Sheet View: FENCE_VIEW1
Printed: 6/19/2018 @ 9:03:04 AM By: jdouglas
File: N:\03\60\06634_2E\roadway\sheets\1052260440.dgn

34" x 22"

LEGEND

- (A) PRESSURE RELIEF JOINT TYPE "A" AS PER BP-2.3
- (C) CONTRACTION JOINT, AS PER BP-2.2
- (D) EXPANSION JOINT (WITHOUT DOWELS), AS PER BP-2.2
- (E) EXPANSION JOINT, AS PER BP-2.2
- (L) STANDARD LONGITUDINAL JOINT WITH TIE BARS, AS PER BP-2.1
- (M) CONSTRUCTION JOINT, AS PER BP-2.2 "SEE MOT PLAN SHEETS"
- (S) STANDARD LONGITUDINAL JOINT WITHOUT TIE BARS, AS PER BP-2.1
- (Y) BUTT JOINT BETWEEN EXISTING PAVEMENT AND PROPOSED PAVEMENT, A DOWELLED TYPE Y JOINT, AS PER BP-2.5 SHALL BE PROVIDED.

0 5 10 20 HORIZONTAL SCALE IN FEET

CALCULATED | CHECKED

PAVEMENT JOINT DETAIL
CHILDRENS DR - STA. 590+00 TO STA. 591+50

FRA-70-14.54

1131
2317

ms consultants, inc.

PLOT.CEL

ms consultants, inc.
msconsultants.com

www.msconsultants.com

Ohio DOT Workspace
70\71 East Interchange 2E

ODF: ohdot\V8i
PCF: 60-06634_2E_Columbus

0 0.5" 1"

Batchplot Spec: \\msconsultants.com\Files\production\03\60\06634_2E\standards\plotdrv\batchplt.spc
Pen Table: N:\03\60\06634_2E\standards\tables\V8i_ms_std_06634_2D_Plan View.tbl
Plot Driver: \\msconsultants.com\Files\Standards\ustn\ohdot\v8i\ms\plotting\PDF.pltcfg

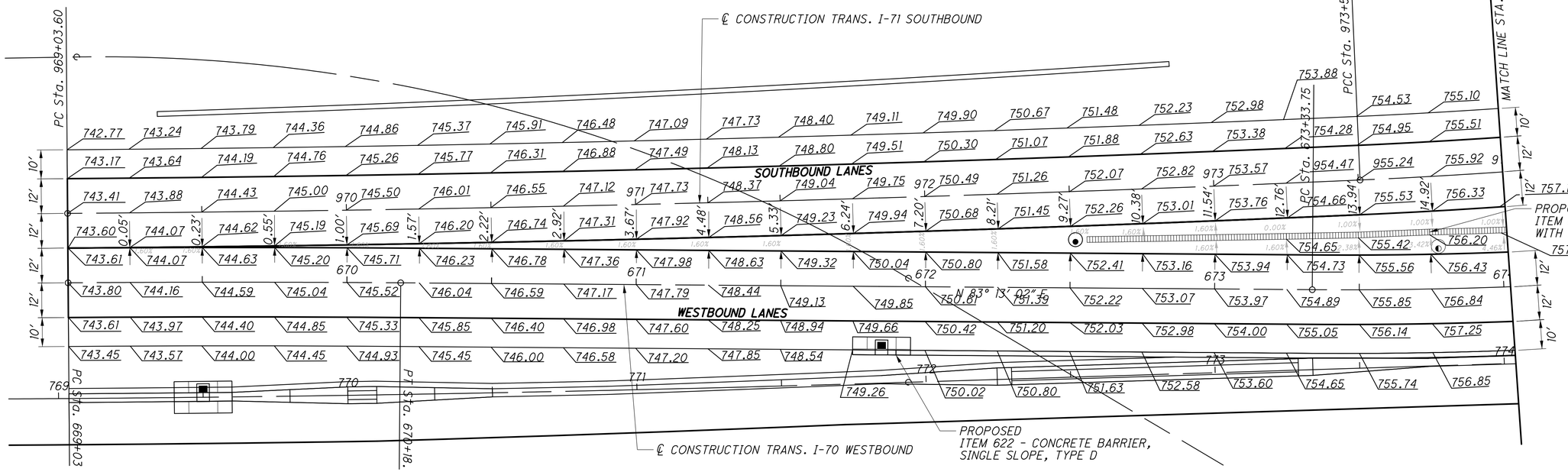

NOTE:
FOR STATIONS, WIDTH AND ELEVATIONS
NOT SHOWN SEE SUPERELEVATION TABLES.

Model: Sheet 1
Printed: 6/19/2018 @ 9:03:06 AM
File: N:\03\60\06634_2E\roadway\sheets\Sheets from 21MM\77370_GA001I2MM1.dgn

View: FENCE_VIEW1
By: jdouglas

34" x 22"

HORIZONTAL SCALE IN FEET
0 10 20 40

CALCULATED JJR
CHECKED TZ

PAVEMENT DETAIL SHEET
STA. 969+03.60 TO STA. 974+00.00
TRANS. I-71 SOUTHBOUND / TRANS. I-70 WESTBOUND

FRA-70-14.54

1132
2317

ms consultants, inc.

PLOT.CEL

ms consultants, inc.
msconsultants.com

www.msconsultants.com

Ohio DOT Workspace
70\71 East Interchange 2E

PCF: ohdot\V8i
PCF: 60-06634_2E_Columbus

Batchplot Spec: \\msconsultants.com\files\production\03\60\06634_2E\standards\plotdrv\batchplt.spc
Pen Table: N:\03\60\06634_2E\standards\tables\V8i_ms_std_06634_2D_Plan View.tbl
Plot Driver: \\msconsultants.com\files\Standards\usstn\ohdot\v8i\ms\plotting\PDF.pltcfg

Model: Sheet 1 @ 9:03:08 AM View: FENCE_VIEW1
Printed: 6/19/2018 By: jdouglas
File: N:\03\60\06634_2E\roadway\Sheets\Sheets from 2LMN\77370_GA00212LMN1.dgn

34" x 22"

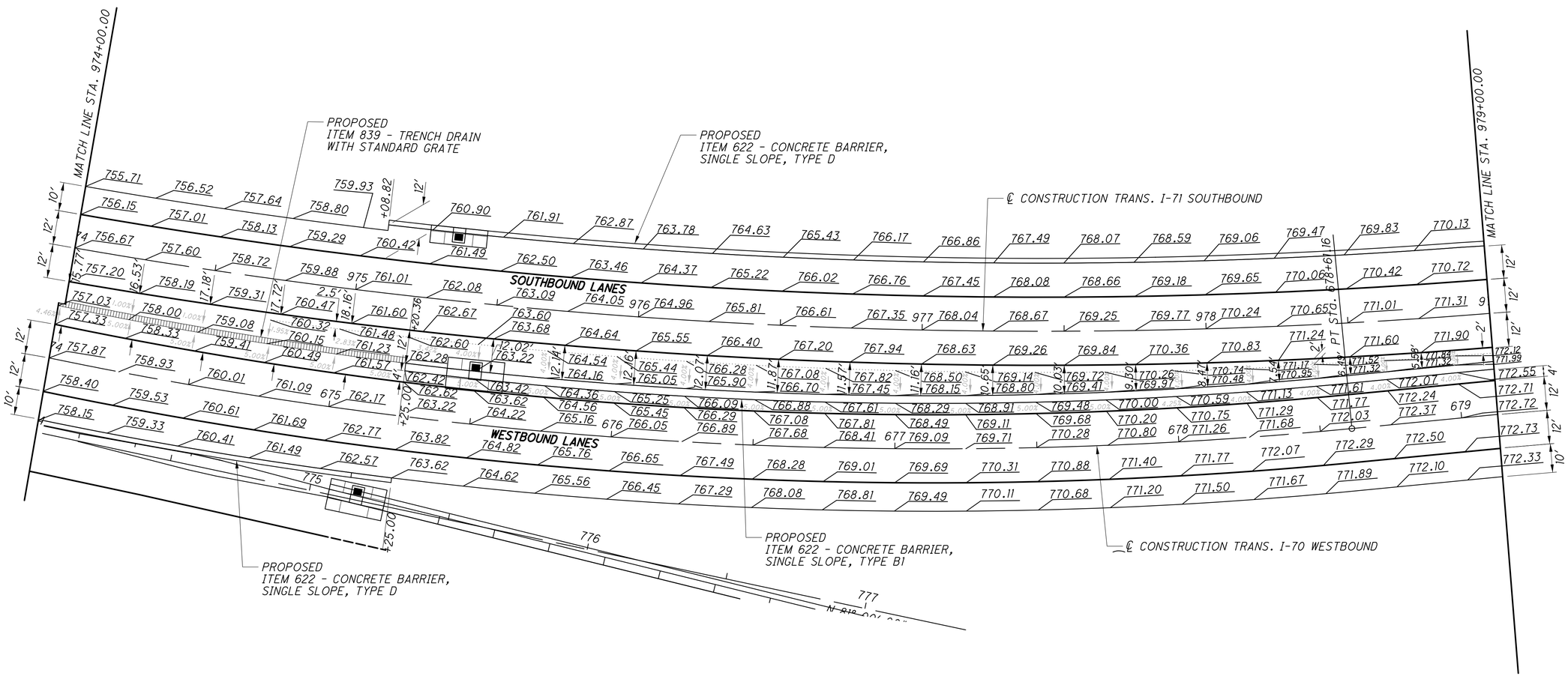

NOTE:
FOR STATIONS, WIDTH AND ELEVATIONS
NOT SHOWN SEE SUPERELEVATION TABLES.

HORIZONTAL SCALE IN FEET
0 10 20 40

CALCULATED JJR
CHECKED TZ

PAVEMENT DETAIL SHEET
STA. 974+00.00 TO STA. 979+00.00
TRANS. I-71 SOUTHBOUND / TRANS. I-70 WESTBOUND

FRA-70-14.54

1133
2317

ms consultants, inc.

PLOT.CEL

ms consultants, inc.
msconsultants.com

www.msconsultants.com

Ohio DOT Workspace
70\71 East Interchange 2E

ODF: ohdot\V8i
PCF: 60-06634_2E_Columbus

Batchplot Spec: \\msconsultants.com\Files\production\03\60\06634_2E\standards\plotdir\batchplt.spc
Pen Table: N:\03\60\06634_2E\standards\tables\V8i_ms_std_06634_2D_Plan View.tbl
Plot Driver: \\msconsultants.com\Files\Standards\ustn\ohdot\v8i\ms\plotting\PDF.pltcfg

Model: Sheet 1
Printed: 6/19/2018 @ 9:03:10 AM
File: N:\03\60\06634_2E\roadway\sheets\Sheets from ZLMN\77370_CA003I2LMN.dgn

View: FENCE_VIEW1
By: jdouglas

34" x 22"

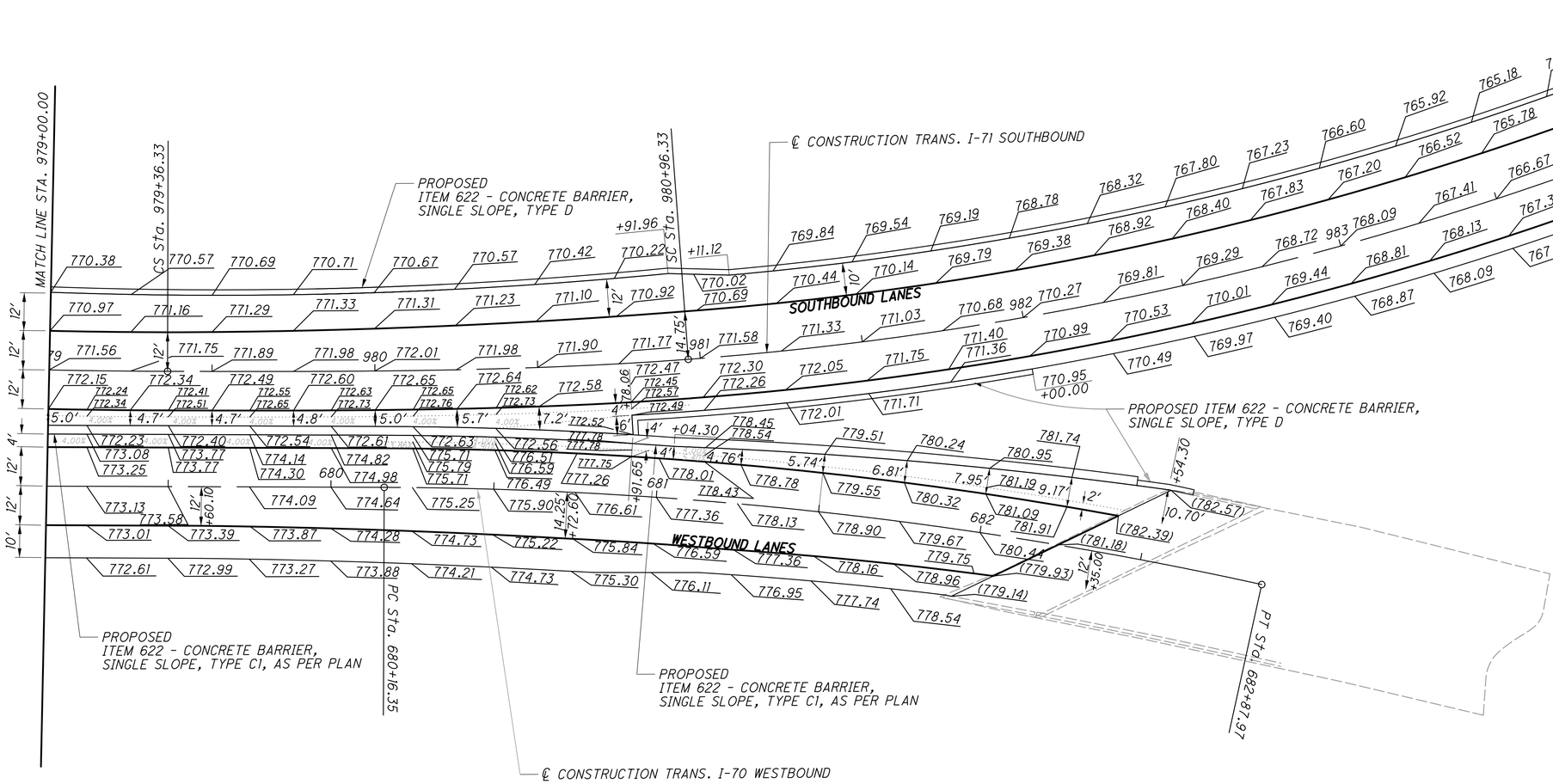

NOTE:
FOR STATIONS, WIDTH AND ELEVATIONS
NOT SHOWN SEE SUPERELEVATION TABLES.

HORIZONTAL SCALE IN FEET
0 10 20 40

CALCULATED JJR
CHECKED TZ

PAVEMENT DETAIL SHEET
STA. 979+00.00 TO STA. 984+00.00
TRANS. I-71 SOUTHBOUND / I-70 WESTBOUND

FRA-70-14.54

1134
2317

PLOT.CEL

ms consultants, inc.
msconsultants.com

www.msconsultants.com

Ohio DOT Workspace
70\71 East Interchange 2E

ODF: ohdot\V8i
PCF: 60-06634_2E_Columbus

0 1" 0.5"

34" x 22"

Batchplot Spec: \\msconsultants.com\files\production\03\60\06634_2E\standards\plotdr\batchplt.sdc
Pen Table: N:\03\60\06634_2E\standards\tables\V8i_ms_std_06634_2D_Plan View.tbl
Plot Driver: \\msconsultants.com\files\Standards\ustn\ohdot\v8i\ms\plotting\PDF.pltcfg

Model: Sheet 1 View: FENCE_VIEW1
Printed: 6/19/2018 @ 9:03:11 AM By: jdoughs
File: N:\03\60\06634_2E\roadway\sheets\Sheets from 2LMN\77370_040042L1MN.dgn

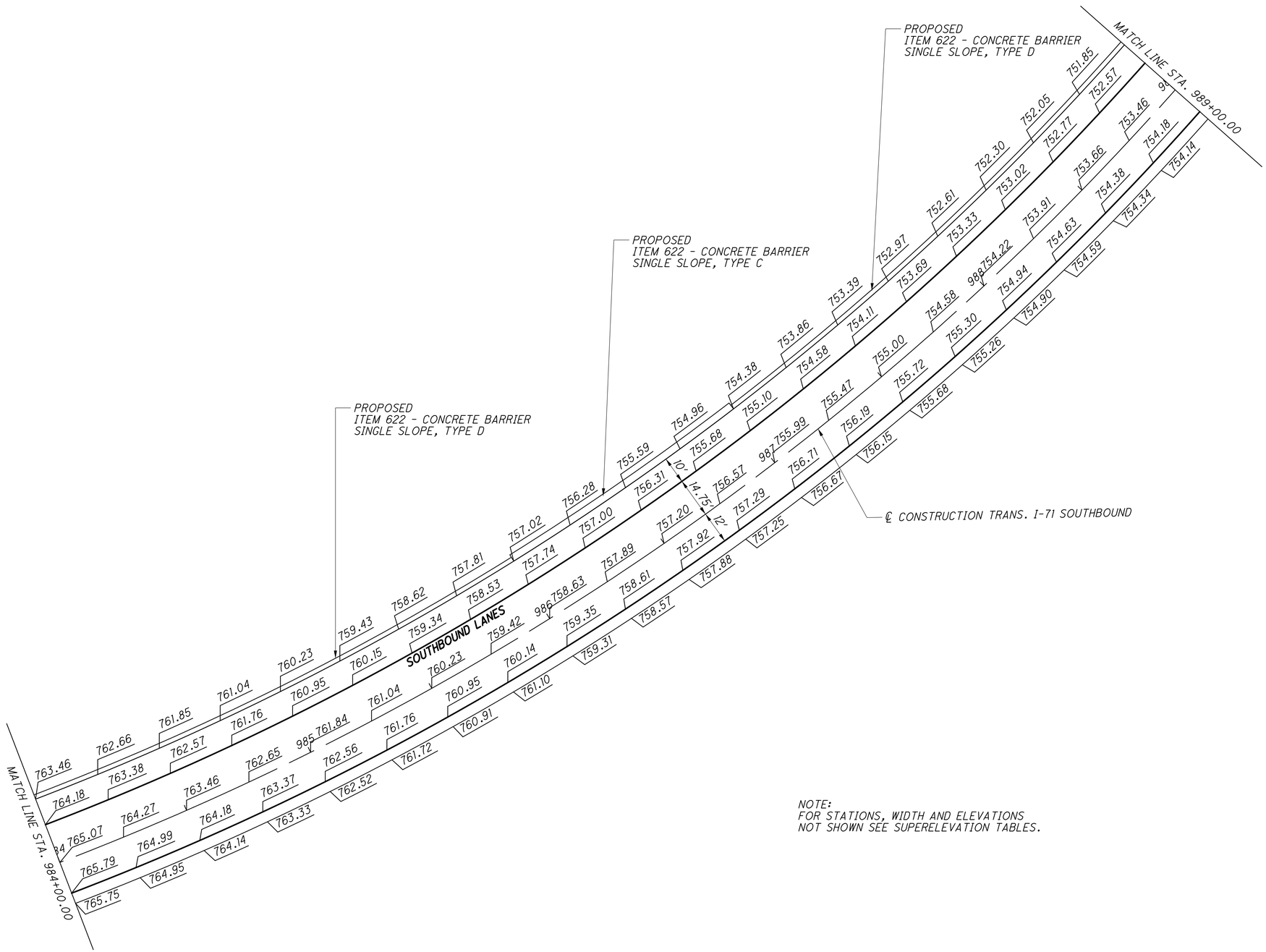

NOTE:
FOR STATIONS, WIDTH AND ELEVATIONS
NOT SHOWN SEE SUPERELEVATION TABLES.

0 10 20 40
HORIZONTAL
SCALE IN FEET

CALCULATED JJR
CHECKED TZ

PAVEMENT DETAIL SHEET
STA. 984+00.00 TO STA. 989+00.00
TRANS. I-71 SOUTHBOUND

FRA-70-14.54

1135
2317

PLOT.CEL

ms consultants, inc.
msconsultants.com

www.msconsultants.com

Ohio DOT Workspace
70\71 East Interchange 2E

ODF: ohdot\V8i
PCF: 60-06634_2E_Columbus

Batchplot Spec: \\msconsultants.com\files\production\03\60\06634_2E\standards\plotdr\batchplt.spc
Pen Table: N:\03\60\06634_2E\standards\tables\V8i_ms_std_06634_2D_Plan View.tbl
Plot Driver: \\msconsultants.com\files\Standards\usen\ohdot\v8i\ms\plotting\PDF.pltcfg

Model: Sheet 1
Printed: 6/19/2018 @ 9:03:13 AM
File: N:\03\60\06634_2E\roadway\sheets\Sheets from 2LMN\77370_CA005I2LMN.dgn

View: FENCE_VIEW1
By: jdoughs

34" x 22"

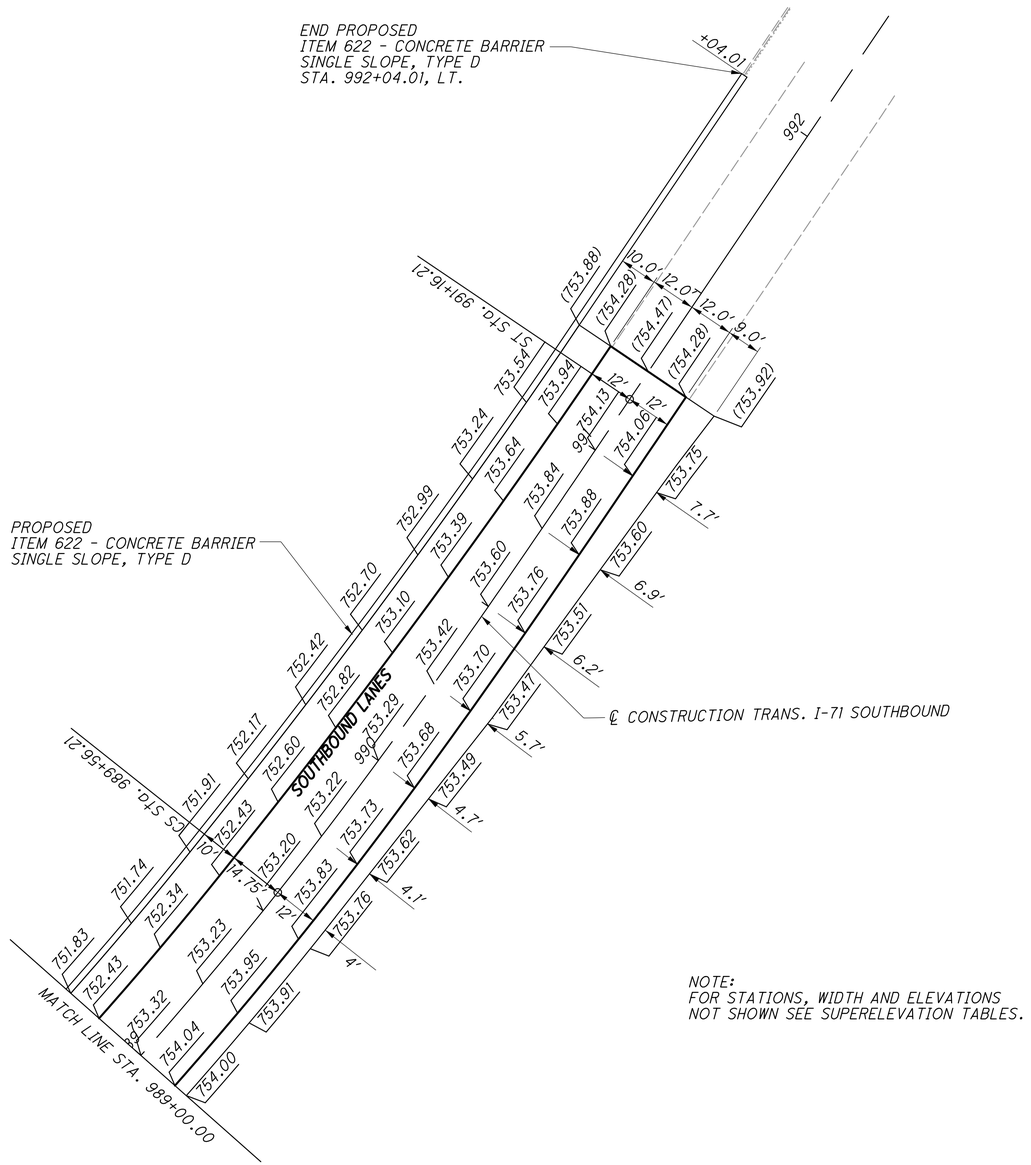

NOTE:
FOR STATIONS, WIDTH AND ELEVATIONS
NOT SHOWN SEE SUPERELEVATION TABLES.

HORIZONTAL SCALE IN FEET
0 10 20 40

CALCULATED JJR
CHECKED TZ

PAVEMENT DETAIL SHEET
STA. 989+00.00 TO STA. 991+25.00
TRANS. I-71 SOUTHBOUND

FRA-70-14.54

1136
2317

PLOT.CEL

ms consultants, inc.
msconsultants.com

www.msconsultants.com
Ohio DOT Workspace
70\71 East Interchange 2E
PDF: ohdot\V8i
PCF: 60-06634_2E_Columbus

Batchplot Spec: \\msconsultants.com\files\production\03\60\06634_2E\standards\plotdir\batchplt.spc
Pen Table: \\msconsultants.com\files\Standards\usth\ohdot\V8i\ms\plotting\pen\V8i_ms_std.tbl
Plot Driver: \\msconsultants.com\files\Standards\usth\ohdot\v8i\ms\plotting\PDF.pltcfg

Model: Sheet
Printed: 6/19/2018 @ 9:03:22 AM
File: N:\03\60\06634_2E\roadway\sheets\105322GI100.dgn
View: FENCE_VIEW1
By: jdouglas

34" x 22"

LEGEND
(XXX.XX) - EXISTING ELEV.
XXX.XX - PROPOSED ELEV.

HORIZONTAL SCALE IN FEET
0 5 10 20

CALCULATED | CHECKED

PAVEMENT DETAIL - I-70
775+06.56 TO STA. 777+50.00

FRA-70-14.54

1137
2317

FACE OF BARRIER
℄ I-70
N 81° 00' 00" E
℄ RAMP N4

STATION	PGL	EOP	DIFF.
775+06.56	14.74' RT	14.74' RT	0.00'
775+25.00	14.95' RT	15.08' RT	0.13'
775+50.00	15.25' RT	15.55' RT	0.30'
775+75.00	15.54' RT	16.02' RT	0.48'
776+00.00	15.84' RT	16.49' RT	0.65'
776+25.00	16.00' RT	16.96' RT	0.96'
776+50.00	16.00' RT	17.43' RT	1.43'
776+75.00	16.00' RT	17.90' RT	1.90'
777+00.00	16.00' RT	18.37' RT	2.37'
777+25.00	16.00' RT	18.84' RT	2.84'

PLOT.CEL

ms consultants, inc.
msconsultants.com

www.msconsultants.com
Ohio DOT Workspace
70\71 East Interchange 2E
PCF: ohdot\V8i
PCF: 60-06634_2E_Columbus

Batchplot Spec: \\msconsultants.com\files\production\03\60\06634_2E\standards\plotdir\batchplt.spc
Pen Table: \\msconsultants.com\files\Standards\ustn\ohdot\V8i\ms\plotting\pen\V8i_ms_std.tbl
Plot Driver: \\msconsultants.com\files\Standards\ustn\ohdot\V8i\ms\plotting\PDF.pltcfg

Model: Sheet
Printed: 6/19/2018 @ 9:03:24 AM
File: N:\03\60\06634_2E\roadway\sheets\1053220101.dgn
View: FENCE_VIEW1
By: jdougles

34" x 22"

LEGEND
(XXX.XX) - EXISTING ELEV.
XXX.XX - PROPOSED ELEV.

424' SUPERELEVATION TRANSITION

HORIZONTAL SCALE IN FEET
0 5 10 20

CALCULATED
CHECKED

PAVEMENT DETAIL - I-70
777+75.00 TO STA. 780+50.00

FRA-70-14.54

1138
2317

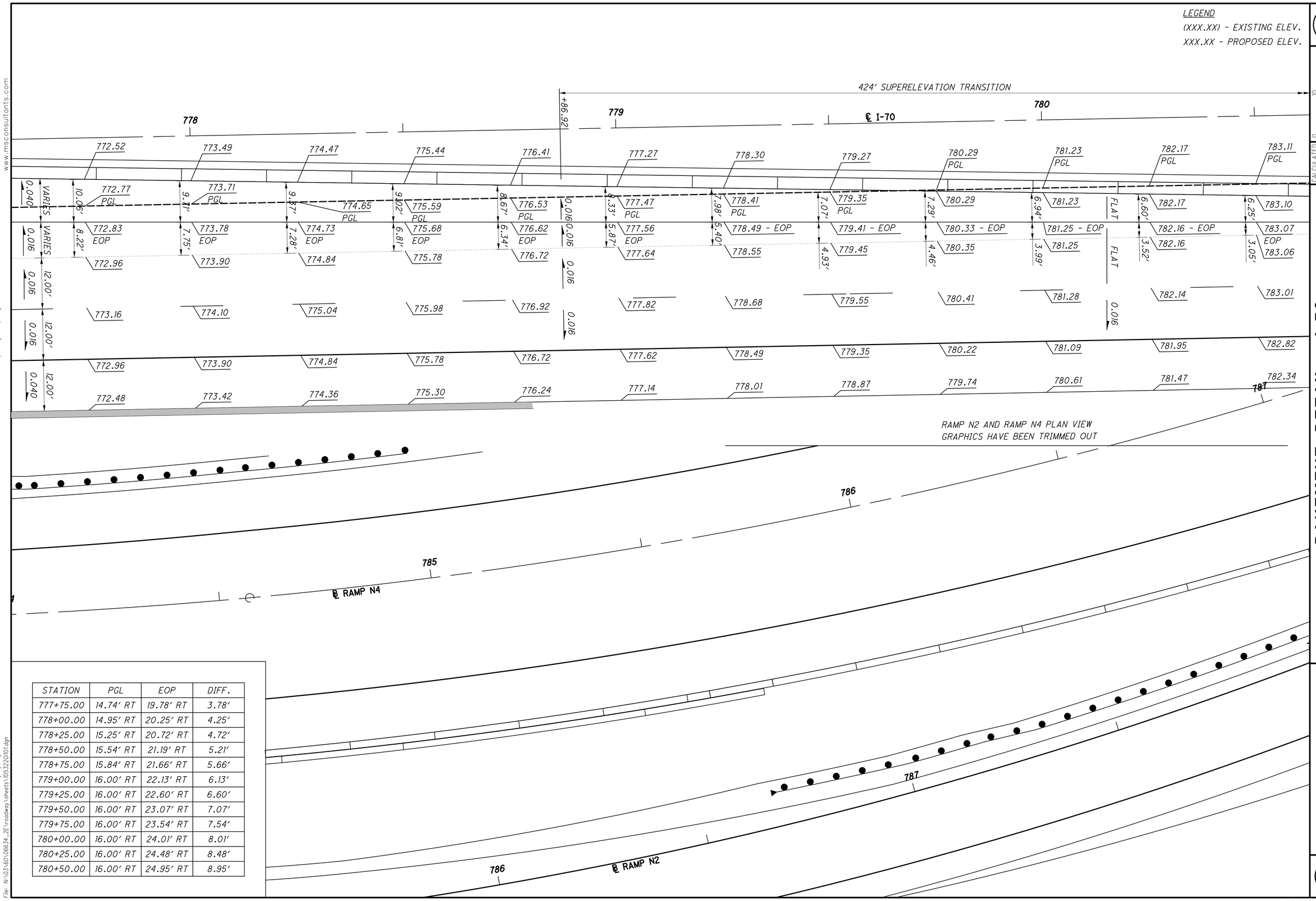

STATION	PGL	EOP	DIFF.
777+75.00	14.74' RT	19.78' RT	3.78'
778+00.00	14.95' RT	20.25' RT	4.25'
778+25.00	15.25' RT	20.72' RT	4.72'
778+50.00	15.54' RT	21.19' RT	5.21'
778+75.00	15.84' RT	21.66' RT	5.66'
779+00.00	16.00' RT	22.13' RT	6.13'
779+25.00	16.00' RT	22.60' RT	6.60'
779+50.00	16.00' RT	23.07' RT	7.07'
779+75.00	16.00' RT	23.54' RT	7.54'
780+00.00	16.00' RT	24.01' RT	8.01'
780+25.00	16.00' RT	24.48' RT	8.48'
780+50.00	16.00' RT	24.95' RT	8.95'

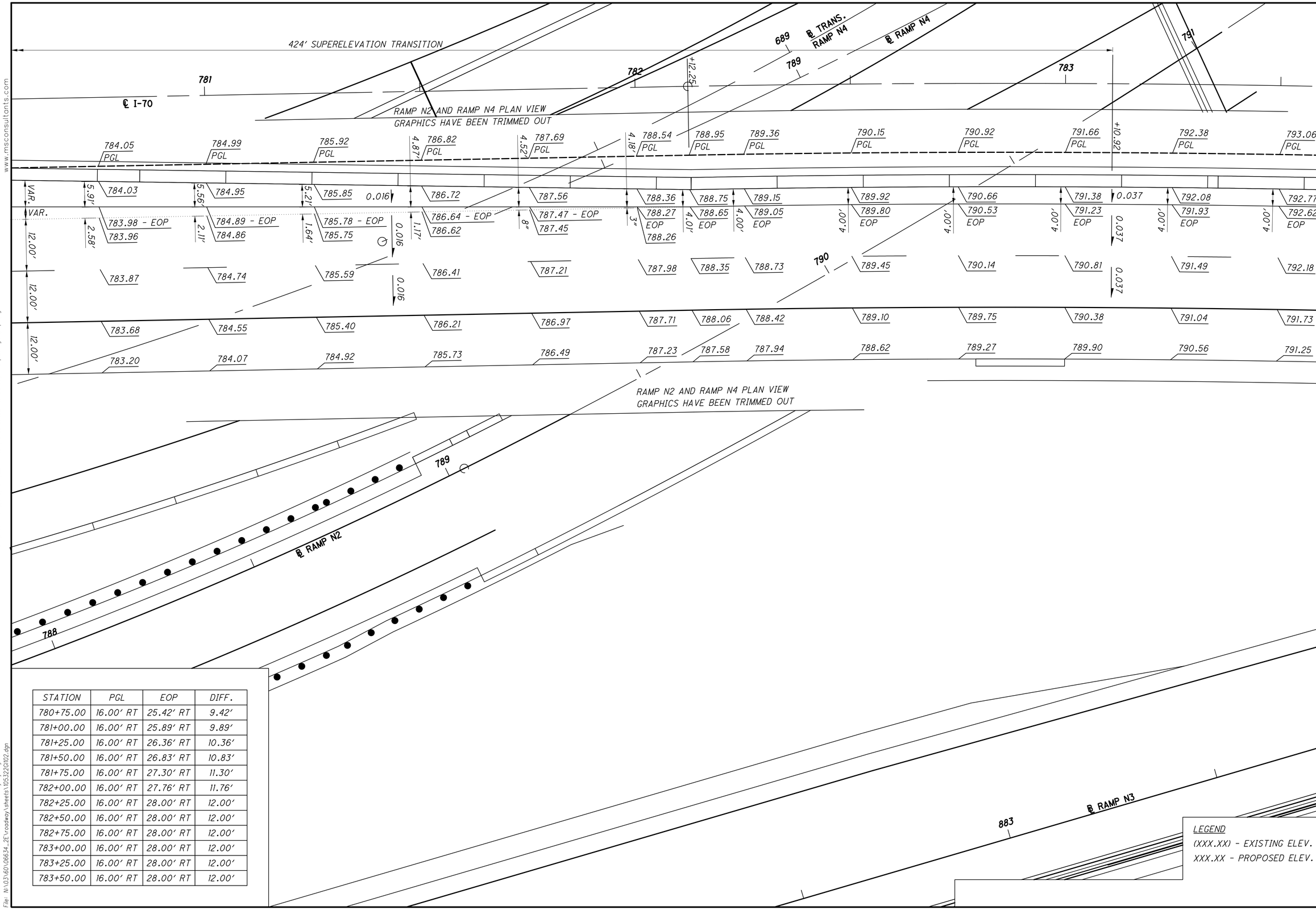

STATION	PGL	EOP	DIFF.
780+75.00	16.00' RT	25.42' RT	9.42'
781+00.00	16.00' RT	25.89' RT	9.89'
781+25.00	16.00' RT	26.36' RT	10.36'
781+50.00	16.00' RT	26.83' RT	10.83'
781+75.00	16.00' RT	27.30' RT	11.30'
782+00.00	16.00' RT	27.76' RT	11.76'
782+25.00	16.00' RT	28.00' RT	12.00'
782+50.00	16.00' RT	28.00' RT	12.00'
782+75.00	16.00' RT	28.00' RT	12.00'
783+00.00	16.00' RT	28.00' RT	12.00'
783+25.00	16.00' RT	28.00' RT	12.00'
783+50.00	16.00' RT	28.00' RT	12.00'

LEGEND
(XXX.XX) - EXISTING ELEV.
XXX.XX - PROPOSED ELEV.

HORIZONTAL SCALE IN FEET
0 5 10 20

CALCULATED
CHECKED

PAVEMENT DETAIL - I-70
780+75.00 TO STA. 783+50.00

FRA-70-14.54

ms consultants, inc.
msconsultants.com
Ohio DOT Workspace
70\71 East Interchange 2E
www.msconsultants.com
Batchplot Spec: \\msconsultants.com\files\production\03\60\06634_2E\standards\plotdrv\batchplt.spec
Pen Table: \\msconsultants.com\files\Standards\ustn\ohdot\V8i\ms\plotting\pen\V8i_ms_std.tbl
Plot Driver: \\msconsultants.com\files\Standards\ustn\ohdot\v8i\ms\plotting\PDF.pltcfg
34" x 22"
View: FENCE_VIEW1
By: jdouglas
Model: Sheet
Printed: 6/19/2018 @ 9:03:26 AM
File: N:\03\60\06634_2E\roadway\sheets\105322G1102.dgn

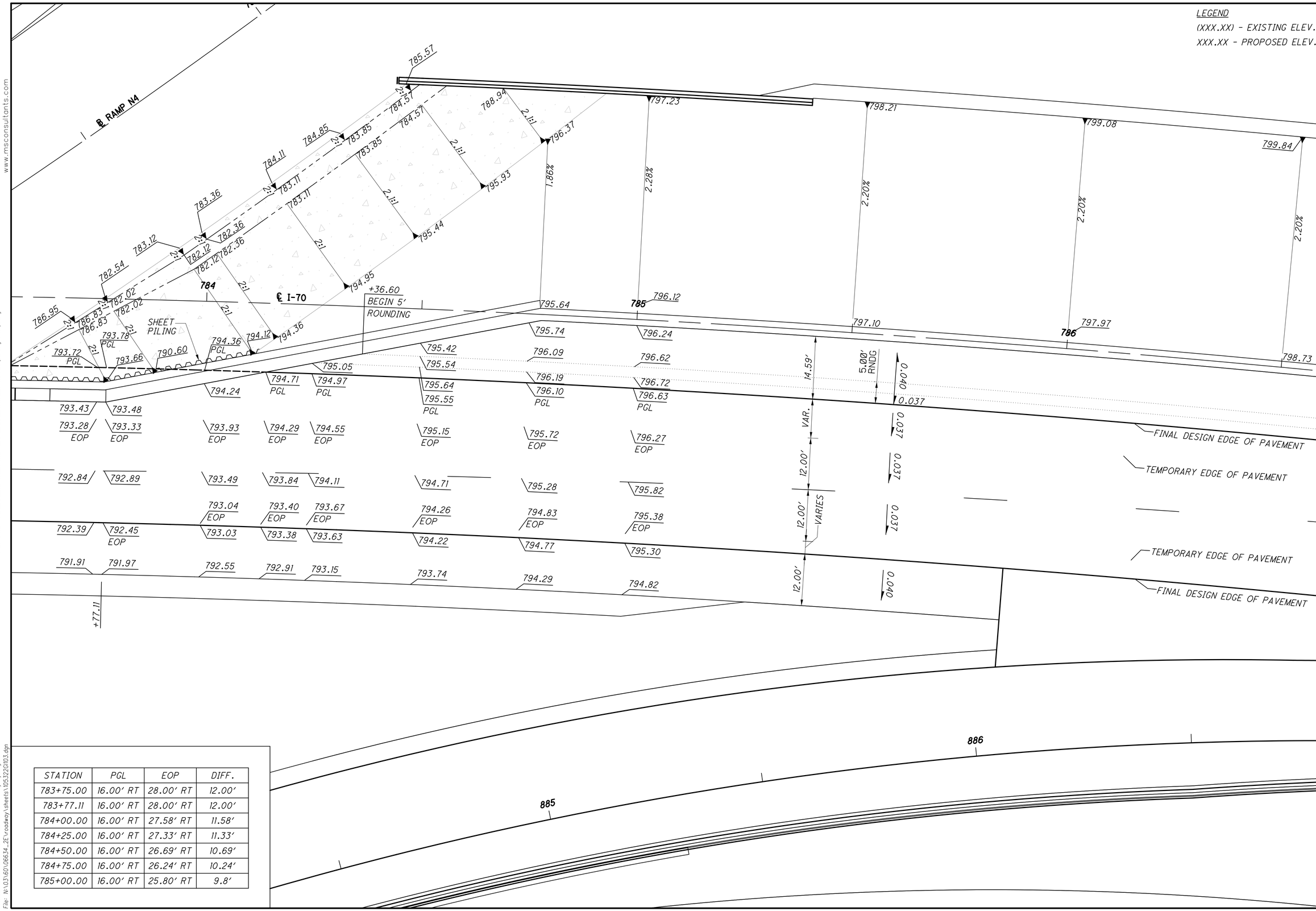

STATION	PGL	EOP	DIFF.
783+75.00	16.00' RT	28.00' RT	12.00'
783+77.11	16.00' RT	28.00' RT	12.00'
784+00.00	16.00' RT	27.58' RT	11.58'
784+25.00	16.00' RT	27.33' RT	11.33'
784+50.00	16.00' RT	26.69' RT	10.69'
784+75.00	16.00' RT	26.24' RT	10.24'
785+00.00	16.00' RT	25.80' RT	9.8'

PAVEMENT DETAIL - I-70
STA. 783+75.00 TO STA. 785+00.00

CALCULATED
CHECKED

FRA-70-14.54

1140
2317

PLOT.CEL
ms consultants, inc.
msconsultants.com
www.msconsultants.com
Ohio DOT Workspace
70\71 East Interchange 2E
PCF: ohdot\V8i
PCF: 60-06634_2E_Columbus
Batchplot Spec: \\msconsultants.com\files\production\03\60\06634_2E\standards\plotdrv\batchplt.spc
Pen Table: \\msconsultants.com\files\Standards\usln\ohdot\V8i\ms\plotting\pen\V8i_ms_std.tbl
Plot Driver: \\msconsultants.com\files\Standards\usln\ohdot\V8i\ms\plotting\PDF.pltcfg
34" x 22"
Model: Sheet
Printed: 6/19/2018 @ 9:03:28 AM
File: N:\03\60\06634_2E\roadway\sheets\105322G1103.dgn
View: SHEET
By: jdouglas
ms consultants, inc.

PLOT.CEL

ms consultants, inc.
msconsultants.com

www.msconsultants.com

Ohio DOT Workspace
70\71 East Interchange 2E

0 0.5" 1"

PDF: ohdot\V8i
PDF: 60-066.34_2E_Columbus

Batchplot Spec: \\msconsultants.com\files\production\03\60\06634_2E\standards\dot\v8i\batchplt.spc
Pen Table: \\msconsultants.com\files\Standards\ustn\ohdot\V8i\ms\plotting\pen\V8i_ms_std.tbl
Plot Driver: \\msconsultants.com\files\Standards\ustn\ohdot\v8i\ms\plotting\PDF.pltcfg

Model: Sheet
Printed: 6/19/2018 @ 9:03:35 AM
File: N:\03\60\06634_2E\roadway\sheets\105322X0001.dgn

View: FENCE_VIEW1
By: jdouglas

34" x 22"

COLUMBUS FIRE STATION #2
FFE = 752.40

FIFTH ST.

FULTON ST.

TRANS. I-70 WB

TRANS. I-70 EB

FOURTH ST.

MATCHLINE - SEE SHEET 1142

652 653 654 655 656 657 658 659 660 661 662 663

854 855 856 857 858 859 860 861 862 863

961 962 963

6:1 5:1 6:1 7:1 4:1 6:1 7:1 7:1 7:1 7:1 8:1 8:1 10:1

13:1 9:1 8:1 10:1 9:1 9:1 11:1 10:1 9:1

N

0 20 40 80
HORIZONTAL SCALE IN FEET

CALCULATED | CHECKED

GRADING DETAILS - TRANS. I-70 WEST SIDE

FRA-70-14.54

1141
2317

PLOT.CEL

ms consultants, inc.
msconsultants.com

www.msconsultants.com

Ohio DOT Workspace
70\71 East Interchange 2E

0 0.5" 1"

34" x 22"

Batchplot Spec: \\msconsultants.com\files\production\03\60\06634_2E\standards\plotdr\batchplt.spc
Pen Table: \\msconsultants.com\files\Standards\usitn\ohdot\V8i\ms\plotting\pen\V8i_ms_std.tbl
Plot Driver: \\msconsultants.com\files\Standards\usitn\ohdot\v8i\ms\plotting\PDF.pltcfg

PDF: ohdot\V8i
DGN: 60-06634_2E_Columbus

Model: Sheet
Printed: 6/19/2018 @ 9:03:39 AM
File: N:\03\60\06634_2E\roadway\sheets\1053220002.dgn

View: FENCE_VIEW1
By: jdougas

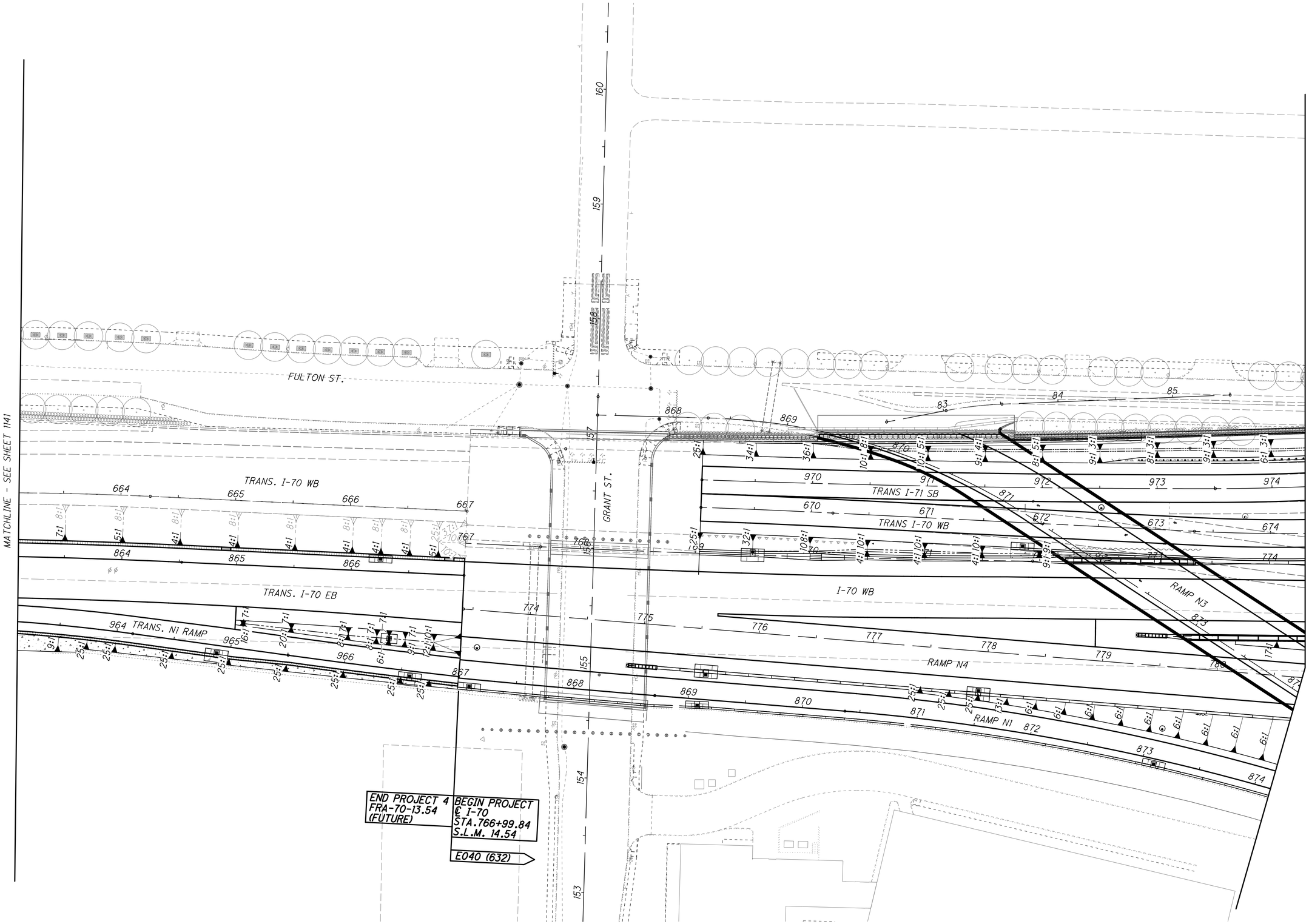

HORIZONTAL SCALE IN FEET
0 20 40 80

CALCULATED
CHECKED

GRADING DETAILS - TRANS. I-70
WEST SIDE / PROP. I-70

FRA-70-14.54

1142
2317

ms consultants, inc.

34" x 22"

Model: Sheet
Printed: 6/19/2018 @ 9:03:44 AM
File: N:\03\60\06634_2E\roadway\sheets\105322XG003.dgn
View: SHEET
By: jdouglas

Batchplot Spec: \\msconsultants.com\files\production\03\60\06634_2E\standards\plotdrv\batchplt.spc
Pen Table: \\msconsultants.com\files\Standards\ustn\ohdot\V8i\ms\plotting\pen\V8i_ms_std.tbl
Plot Driver: \\msconsultants.com\files\Standards\ustn\ohdot\v8i\ms\plotting\PDF.pltcfg
DGN: ohdotV8i
PCF: 60-06634_2E_Columbus

0 1"
0.5"

Ohio DOT Workspace
70\71 East Interchange 2E

ms consultants, inc.
msconsultants.com
www.msconsultants.com

PLOT.CEL

MATCHLINE - SEE SHEET 1142

FULTON ST.

I-70 EB

RAMP N4

RAMP N3

RAMP N1

RAMP N2

TRANS I-71 SB

TRANS I-70 WB

TRANS RAMP N4

N 7° 46' 11"

FOR CONTINUATION - SEE SHEET 1149

FOR CONTINUATION - SEE SHEET 1144

34" x 22"

Model: Sheet
Printed: 6/19/2018 @ 9:03:49 AM
File: N:\03\60\06634_2E\roadway\sheets\105322XG004.dgn
View: FENCE_VIEW1
By: jdouglas

Batchplot Spec: \\msconsultants.com\files\production\03\60\06634_2E\standards\plotdrv\batchplt.spc
Pen Table: \\msconsultants.com\files\Standards\ustn\ohdot\V8i\ms\plotting\pen\V8i_ms_std.tbl
Plot Driver: \\msconsultants.com\files\Standards\ustn\ohdot\v8i\ms\plotting\PDF.pltcfg
PCF: ohdotV8i
PCF: 60-06634_2E_Columbus

0 1"
0 0.5"

Ohio DOT Workspace
70\71 East Interchange 2E

ms consultants, inc.
msconsultants.com
PLOT.CEL

www.msconsultants.com

FOR CONTINUATION, SEE SHEET 1143

FOR CONTINUATION, SEE SHEET 1873

FOR CONTINUATION SEE SHEET 1146

PARSONS AVE.

TRANS PARSONS AVE.

CHILDREN'S DR.

AMBULANCE DR.

WOODBERRY ST.

RAMP N1

RAMP N3

RAMP O3

I-70 EB

I-70 WB

TRANS RAMP N4

TRANS I-71 SB

TRANS I-70 WB

SEE DETAIL ON SHEET 1145

FOR AEP WORK, SEE GENERAL NOTES, SHEET 1287

FOR ITS HUB PLANS, SEE SHEET 1404 AND SHEETS 1433-1435F.

FOR SITE LAYOUT DETAILS, SEE SHEET 1286.

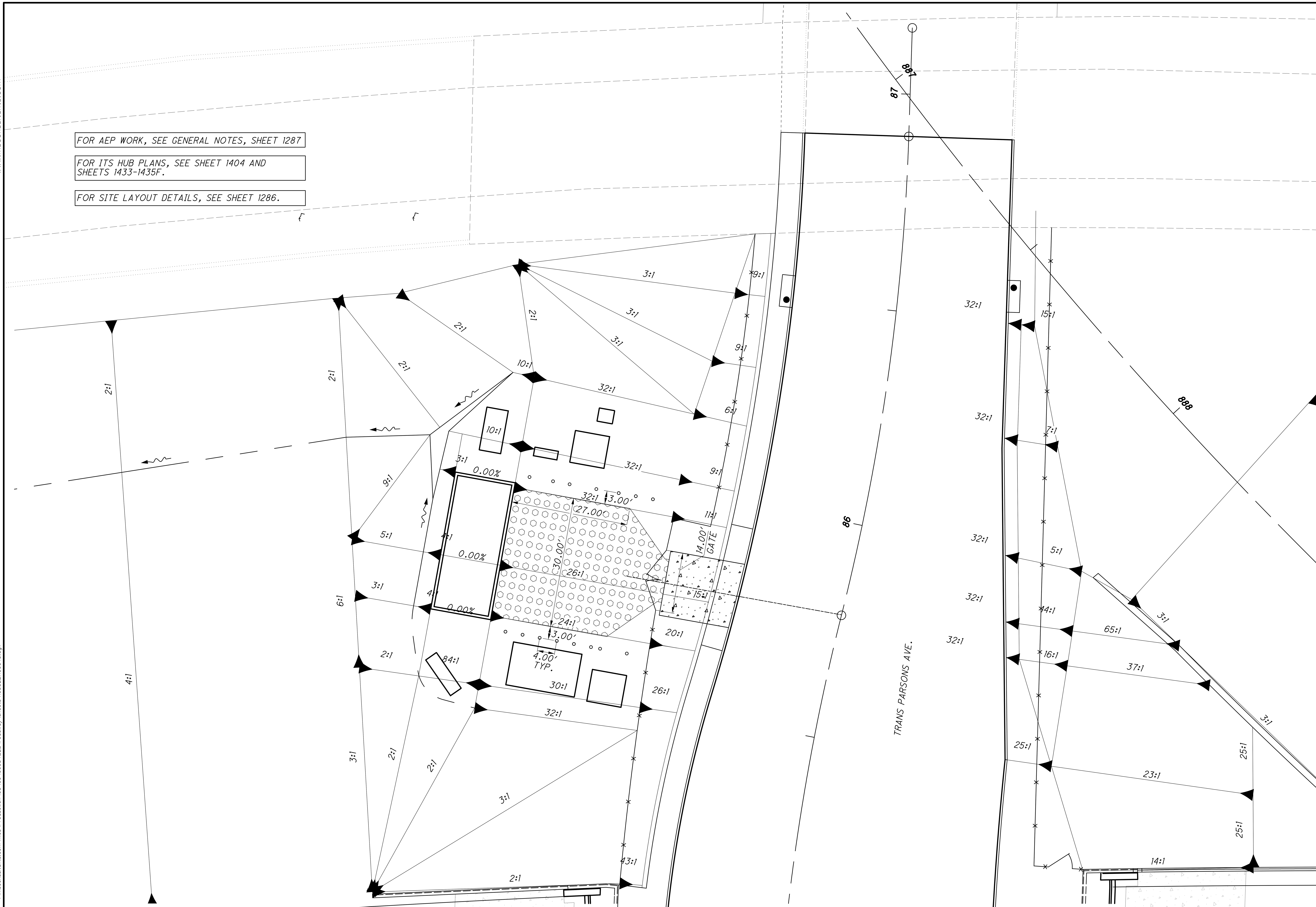

SITE GRADING PLAN

HORIZONTAL SCALE IN FEET
0 5 10 20

CALCULATED
CHECKED

FRA-70-14.54

PLOT.CEL
ms consultants, inc.
msconsultants.com
www.msconsultants.com
Ohio DOT Workspace
70\71 East Interchange 2E
Batchplot Spec: \\msconsultants.com\files\production\03\60\06634_2E\standards\plotdrv\batchplt.spc
Pen Table: \\msconsultants.com\files\Standards\ustn\ohdot\V8i\ms\plotting\pen\V8i_ms_std.tbl
Plot Driver: \\msconsultants.com\files\Standards\ustn\ohdot\v8i\ms\plotting\PDF.pltcfg
CDF: ohdot(V8i)
PDF: 60-06634_2E_Columbus
34" x 22"
Model: Sheet
View: SHEET
Printed: 2/27/2019 @ 8:37:40 AM
By: dhall
File: \\msconsultants.com\files\Production\03\60\06634_2E\roadway\sheets\105322XG004b.dgn
ms consultants, inc.

34" x 22"

Model: Sheet
Printed: 6/19/2018 @ 9:04:07 AM
File: N:\03\60\06634_2E\roadway\sheets\105322XG005.dgn
View: FENCE_VIEW1
By: jdouglas

Batchplot Spec: \\msconsultants.com\files\production\03\60\06634_2E\standards\plotdrv\batchplt.spc
Pen Table: \\msconsultants.com\files\Standards\ustn\ohdot\V8i\ms\plotting\pen\V8i_ms_std.tbl
Plot Driver: \\msconsultants.com\files\Standards\ustn\ohdot\v8i\ms\plotting\PDF.pltcfg
PCF: ohdotV8i
PCF: 60-06634_2E_Columbus

0 1"
0.5"

Ohio DOT Workspace
70\71 East Interchange 2E

ms consultants, inc.
msconsultants.com
www.msconsultants.com

PLOT.CEL

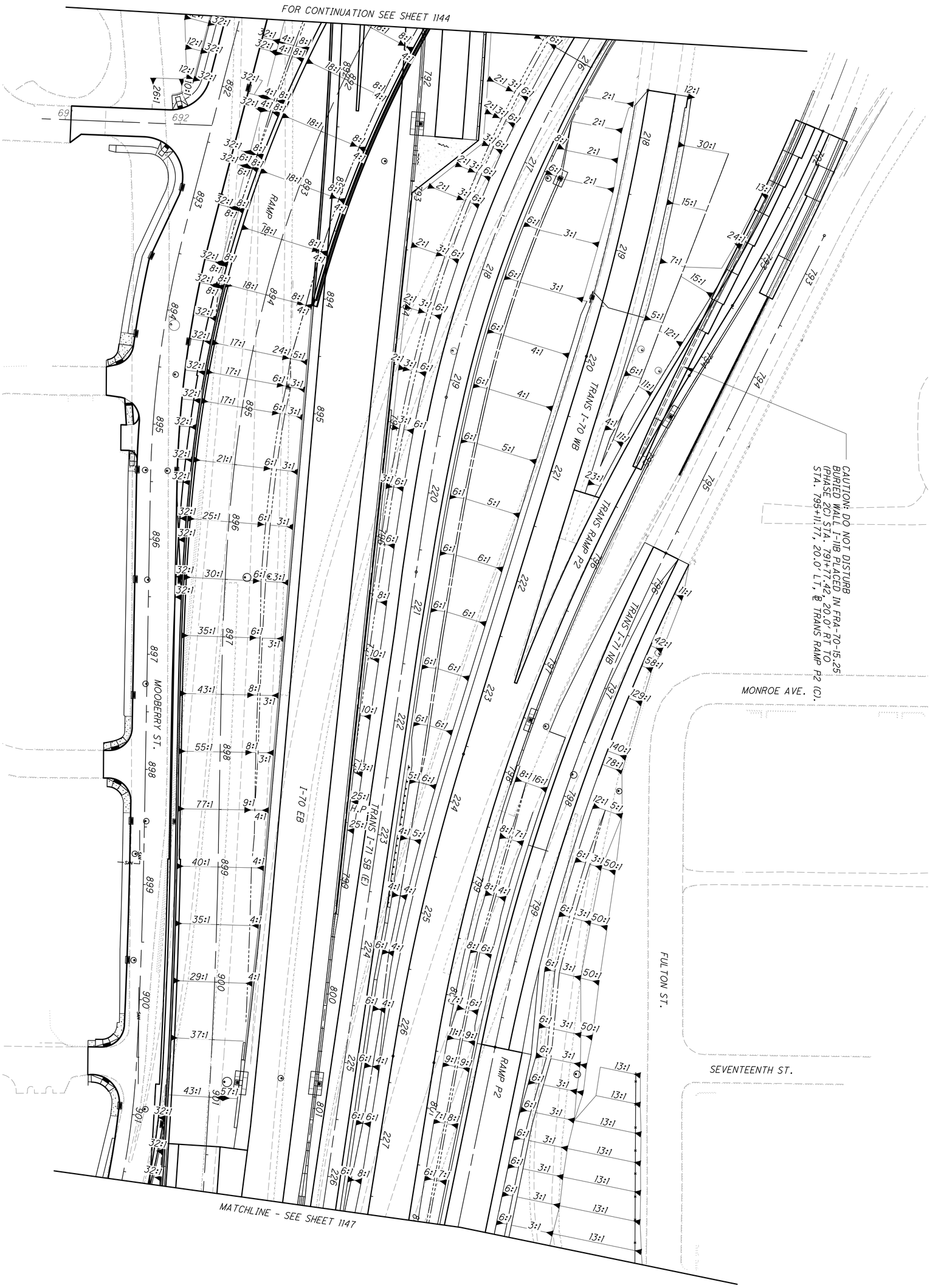

34" x 22"

Model: Sheet
Printed: 6/19/2018 @ 9:04:10 AM
File: N:\03\60\06634_2E\roadway\sheets\105322XG006.dgn
View: FENCE_VIEW1
By: jdouglas

Batchplot Spec: \\msconsultants.com\files\production\03\60\06634_2E\standards\plotdrv\batchplt.spc
Pen Table: \\msconsultants.com\files\Standards\ustn\ohdot\V8i\ms\plotting\pen\V8i_ms_std.tbl
Plot Driver: \\msconsultants.com\files\Standards\ustn\ohdot\v8i\ms\plotting\PDF.pltcfg
PCF: ohdotV8i
PCF: 60-06634_2E_Columbus

0 1"
0.5"

Ohio DOT Workspace
70\71 East Interchange 2E

ms consultants, inc.
msconsultants.com
www.msconsultants.com

PLOT.CEL

MATCHLINE - SEE SHEET 1146

MATCHLINE - SEE SHEET 1148

MOOBERRY ST.

EIGHTEENTH ST.

CARPENTER ST

GILBERT ST

FULTON ST.

ALLEY

RAMP O3

RAMP P2

TRANS. I-70 EB

TRANS I-71 SB (E)

TRANS I-70 WB

TRANS RAMP P2 (E)

END PROJECT
℄ I-70
STA. 807+35.02
S.L.M. 15.30

EOAO (632)

BEGIN
PROJECT 5
FRA-70-15.29
(FUTURE)

34" x 22"

0 1"
0.5"

Model: Sheet
Printed: 6/19/2018 @ 9:04:13 AM
File: N:\03\60\06634_2E\roadway\sheets\105322XG007.dgn
View: FENCE_VIEW1
By: jdouglas

Batchplot Spec: \\msconsultants.com\files\production\03\60\06634_2E\standards\plotdrv\batchplt.spc
Pen Table: \\msconsultants.com\files\Standards\ustn\ohdot\V8i\ms\plotting\pen\V8i_ms_std.tbl
Plot Driver: \\msconsultants.com\files\Standards\ustn\ohdot\v8i\ms\plotting\PDF.pltcfg
PCF: ohdotV8i
PCF: 60-06634_2E_Columbus

Ohio DOT Workspace
70\71 East Interchange 2E

ms consultants, inc.
msconsultants.com
PLOT.CEL

www.msconsultants.com

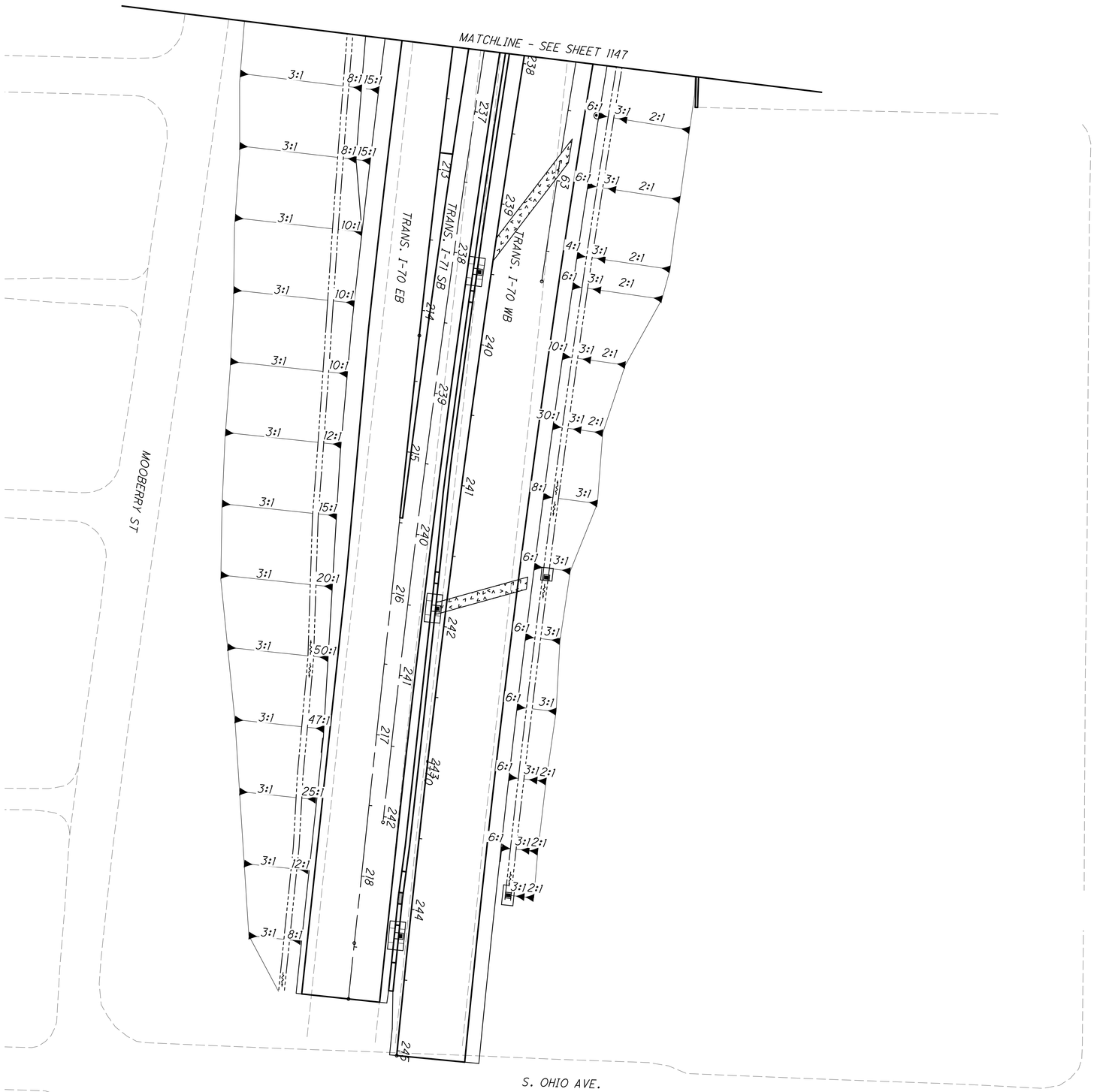

34" x 22"

0 1"
0.5"

Model: Sheet
Printed: 6/19/2018 @ 9:04:16 AM
File: N:\03\60\06634_2E\roadway\sheets\105322XG008.dgn

View: FENCE_VIEW1
By: jdouglas

Batchplot Spec: \\msconsultants.com\files\production\03\60\06634_2E\standards\plotdrv\batchplt.spc
Pen Table: \\msconsultants.com\files\Standards\ustn\ohdot\V8i\ms\plotting\pen\V8i_ms_std.tbl
Plot Driver: \\msconsultants.com\files\Standards\ustn\ohdot\v8i\ms\plotting\PDF.pltcfg

DGN: ohdotV8i
PCF: 60-06634_2E_Columbus

Ohio DOT Workspace
70\71 East Interchange 2E

ms consultants, inc.
msconsultants.com
PLOT.CEL

www.msconsultants.com

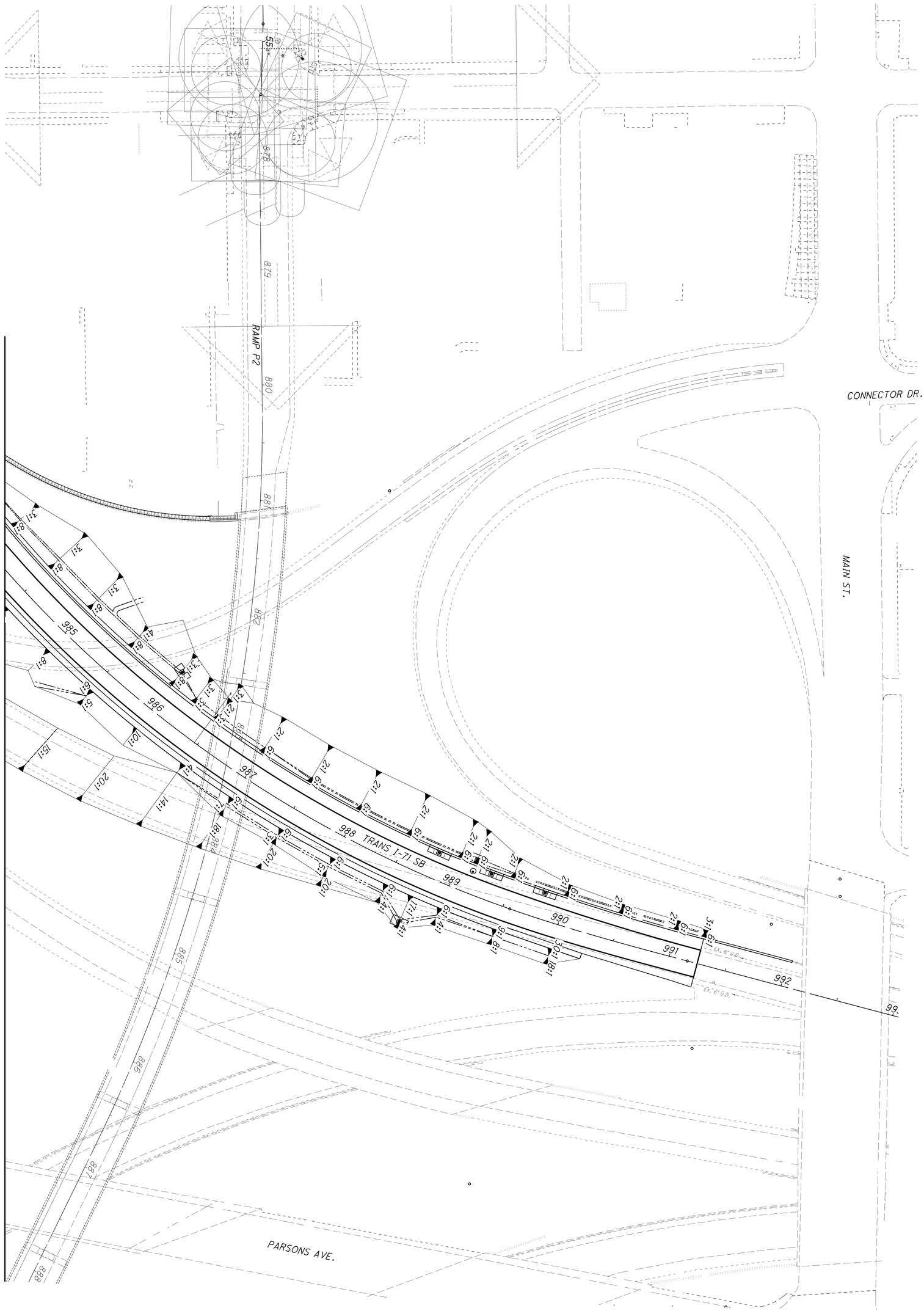

PLOT.CEL

ms consultants, inc.
msconsultants.com

www.msconsultants.com

Ohio DOT Workspace
70\71 East Interchange 2E

Batchplot Spec: \\msconsultants.com\Files\production\03\60\06634_2E\standards\plotdrv\batchplt.spec
Pen Table: \\msconsultants.com\Files\Standards\usth\ohdot\V8i\ms\plotting\pen\V8i_ms_std.tbl
Plot Driver: \\msconsultants.com\Files\Standards\usth\ohdot\V8i\ms\plotting\PDF: ohdotV8i
DGN: 60-06634_2E_Columbus

Model: Sheet
Printed: 6/19/2018 @ 9:04:21 AM
File: N:\03\60\06634_2E\roadway\sheets\1053226001.dgn
View: FENCE_VIEW1
By: jdougas

34" x 22"

LEGEND

(XXX.XX) - EXISTING ELEV.

XXX.XX - PROPOSED ELEV.

NOTE: ALL ELEVATIONS ARE TO BOTTOM OF CURB

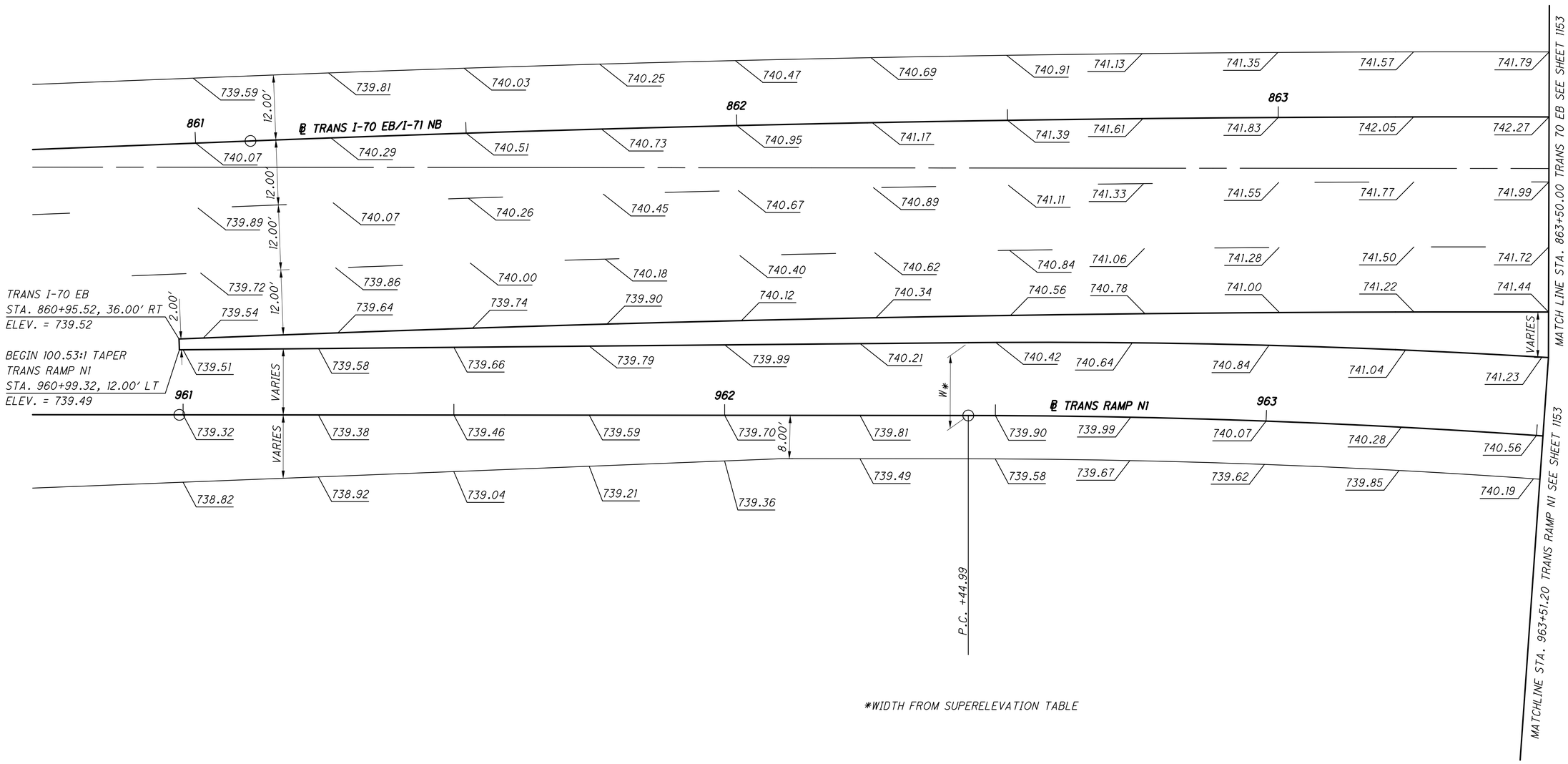

**WIDTH FROM SUPERELEVATION TABLE*

HORIZONTAL SCALE IN FEET
0 5 10 20

CALCULATED | CHECKED

GORE DETAILS
TRANS I-70 EB AND TRANS RAMP N1

FRA-70-14.54

1152
2317

ms consultants, inc.

PLOT.CEL

ms consultants, inc.
msconsultants.com

www.msconsultants.com

Ohio DOT Workspace
70\71 East Interchange 2E

DGN: ohdot\V8i
WCF: 60-06634_2E_Columbus

Batchplot Spec: \\msconsultants.com\files\production\03\60\06634.2E\standards\ohdot\v8i\batchplt.spc
Pen Table: \\msconsultants.com\files\Standards\usth\ohdot\V8i\ms\plotting\pen\V8i_ms_std.tbl
Plot Driver: \\msconsultants.com\files\Standards\usth\ohdot\v8i\ms\plotting\PDF.pltcfg

Model: Sheet
Printed: 6/19/2018 @ 9:04:25 AM
File: N:\03\60\06634.2E\roadway\sheets\1053220002.dgn

View: FENCE_VIEW1
By: jdouglas

34" x 22"

0 1" 0.5"

LEGEND

(XXX.XX) - EXISTING ELEV.

XXX.XX - PROPOSED ELEV.

NOTE: ALL ELEVATIONS ARE TO BOTTOM OF CURB

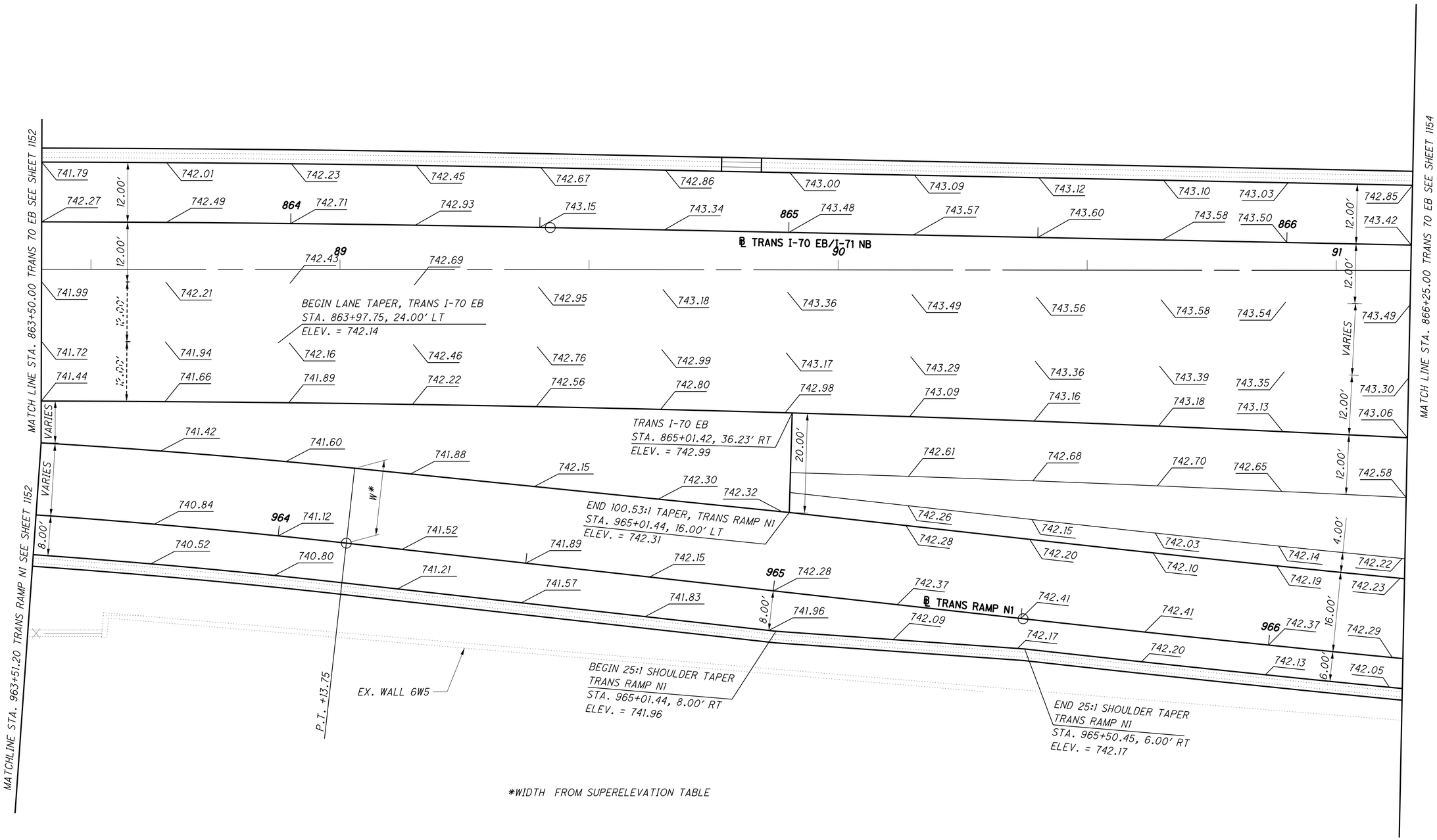

*WIDTH FROM SUPERELEVATION TABLE

HORIZONTAL SCALE IN FEET
0 5 10 20

CALCULATED | CHECKED

GORE DETAILS
TRANS I-70 EB AND TRANS RAMP N1

FRA-70-14.54

1153
2317

PLOT.CEL

ms consultants, inc.
msconsultants.com

www.msconsultants.com

Batchplot Spec: \\msconsultants.com\Files\production\03\60\06634_2E\standards\plotdrv\batchplt.spc
Pen Table: \\msconsultants.com\Files\Standards\ustn\ohdot\V8i\ms\plotting\pen\V8i_ms_std.tbl
Plot Driver: \\msconsultants.com\Files\Standards\ustn\ohdot\v8i\ms\plotting\PDF.pltcfg

PDF: ohdot\V8i
PCF: 60-06634_2E_Columbus

Ohio DOT Workspace
70\71 East Interchange 2E

34" x 22"

Model: Sheet
Printed: 6/19/2018 @ 9:04:33 AM
File: N:\03\60\06634_2E\roadway\sheets\05322G0103.dgn

View: FENCE_VIEW1
By: jdouglas

END PROJECT 4
FRA-70-13.54
(FUTURE)

BEGIN PROJECT
FRA-70-14.48
℄ I-70
STA. 766+99.84

℄ I-70/I-71

STA. 866+98.25, 28.00' LT TRANS I-70 EB =
STA. 766+99.84 I-70

MATCH LINE STA. 866+25.00 TRANS 70 EB SEE SHEET 1154

℄ TRANS I-70 EB/I-71 NB

STA. 866+98.25, 29.23 RT TRANS I-70 EB =
STA. 773+40.85 RAMP N4
ELEV. = 743.25

℄ RAMP N4

CENTER PIER
BRIDGE NO. FRA-70-1456

BEGIN 25:1 SHOULDER TAPER
I-70 , 768+61.59, 3.08' LT
ELEV. = 743.27

END 25:1 SHOULDER TAPER
I-70 , 769+01.61, 1.41' LT
ELEV. = 743.96

I-70, 768+78.24, 52.00' LT =
RAMP N4, 775+19.42, 12.00' LT
ELEV. = 744.43

MATCH LINE STA. 775+50.00 RAMP N4 SEE SHEET 1155

STA. 966+99.85, 1.29 RT TRANS RAMP N1 =
STA. 866+99.12 RAMP N1
ELEV. = 742.10

℄ TRANS RAMP N1

RAMP N4
775+13.88, 36.00' RT
ELEV. = 743.50

RAMP N1
868+70.86, 23.25' LT
ELEV. = 743.46

BEGIN 5:1 SHOULDER TAPER
TRANS RAMP N1
966+83.50, 6.00' RT
ELEV. = 741.91

END 5:1 SHOULDER TAPER
TRANS RAMP N1
966+99.97, 9.29' RT
ELEV. = 741.78

EX. WALL 6W5

SEE DETAIL "A"
THIS SHEET

WALL 6W5

SOUTH ABUTMENT
BRIDGE NO. FRA-70-1456

BEGIN 25:1 TAPER, RAMP N1
868+70.86, 8.00' RT
ELEV. = 742.68

GRANT AVE

VARIES

DETAIL "A"
NTS

SLOPE CONCRETE SLOPE
PROTECTION TOWARD INLET

H.P.

LEGEND
(XXX.XX) - EXISTING ELEV.
XXX.XX - PROPOSED ELEV.

NOTE: ALL ELEVATIONS
ARE TO BOTTOM OF CURB

HORIZONTAL
SCALE IN FEET
0 5 10 20

CALCULATED

CHECKED

GORE DETAILS
I-70 EB AND RAMP N4 AND RAMP N1

FRA-70-14.54

1154
2317

ms consultants, inc.

PLOT.CEL

ms consultants, inc.
msconsultants.com

www.msconsultants.com

Ohio DOT Workspace
70\71 East Interchange 2E

PDF: ohdot\V8i
DGN: 60-06634_2E_Columbus

BEGIN BARRIER TRANSITION
I-70, 769+60.03, 1.41' RT

END BARRIER TRANSITION
I-70, 770+00.03, 2.90' RT

BEGIN BARRIER TRANSITION
I-70, 770+10.03, 2.90' RT

END BARRIER TRANSITION
I-70, 770+50.03 1.41' RT

BEGIN 23:1 TAPER
I-70, 771+84.63, 0.22' RT
ELEV. = 750.35

770 ℄ I-70 771

744.28 744.67 745.13 745.63 746.13 746.66 747.27 747.91 748.59 749.30 750.06

BEGIN 80:1 TAPER
I-70, 770+00.47, 16.00' RT
ELEV. = 746.35

END 80:1 TAPER
I-70, 770+89.87, 15.00' RT
ELEV. = 748.20

13.59'

744.87 745.26 745.69 746.16 746.67 747.23 747.82 748.46 749.13 749.85 750.60

12.00'

745.06 745.45 745.88 746.35 746.86 747.42 748.01 748.65 749.33 750.04 750.80
745.25 745.64 746.07 746.54 747.05 747.61 748.21 748.84 749.52 750.23 750.99

12.00'

I-70
STA. 769+21.59, 52.00' RT
ELEV. = 745.00

745.06 745.45 745.88 746.35 746.86 747.42 748.01 748.65 749.33 750.04 750.80

12.00'

2.0'

744.79 745.14 745.52 745.95 746.41 746.91 747.44 748.02 748.63 749.28 749.97 750.70

RAMP N4
STA. 775+63.00, 12.00' LT
ELEV. = 744.98

776 ℄ RAMP N4 777 778

744.60 744.95 745.33 745.76 746.22 746.71 747.25 747.83 748.44 749.09 749.78 750.51

MATCH LINE STA. 775+50.00 RAMP N4 SEE SHEET 1154

744.41 744.76 745.14 745.56 746.02 746.52 747.06 747.63 748.25 748.90 749.59 750.32

MATCH LINE STA. 778+25.00 RAMP N4 SEE SHEET 1156

744.17 744.52 744.90 745.32 745.78 746.28 746.82 747.39 748.00 748.66 749.35 750.08
743.85 744.14 744.45 744.84 745.31 745.80 746.34 746.91 747.52 748.18 748.88 749.60

12.00'

743.85 744.13 744.49 745.08 745.92 746.69 747.45 748.27 749.09 749.95 750.91
743.94 744.33 744.78 745.36 746.13 746.90 747.67 748.43 748.34 749.25 749.16 750.11 750.03 751.07 750.98
743.62 744.01 744.46 744.96 745.54 746.17 746.86 747.62 748.44 749.31 750.26
743.38 743.77 744.22 744.72 745.30 745.93 746.59 747.35 748.17 749.30 749.99

4.00'
2.00'
16.00'
6.00'

870 ℄ RAMP N1 871

END 25:1 TAPER
RAMP N1 869+20.86, 6.00' RT
ELEV. = 743.32

BEGIN 4' ROUNDING, RAMP N1
870+15.64, 18.00' LT
ELEV. = 745.85

870+96.12, 22.00' LT
ELEV. = 748.14

LEGEND
(XXX.XX) - EXISTING ELEV.
XXX.XX - PROPOSED ELEV.

NOTE: ALL ELEVATIONS
ARE TO BOTTOM OF CURB

HORIZONTAL SCALE IN FEET
0 5 10 20

CALCULATED CHECKED

GORE DETAILS
I-70 EB AND RAMP N4

FRA-70-14.54

1155
2317

Batchplot Spec: \\msconsultants.com\files\production\03\60\06634_2E\standards\plotdir\batchplt.spc
Pen Table: \\msconsultants.com\files\Standards\ustn\ohdot\V8i\ms\plotting\pen\V8i_ms_std.tbl
Plot Driver: \\msconsultants.com\files\Standards\ustn\ohdot\v8i\ms\plotting\PDF.pltcfg

Model: Sheet
Printed: 6/19/2018 @ 9:04:36 AM
File: N:\03\60\06634_2E\roadway\sheets\053220004.dgn

View: FENCE_VIEW1
By: jdouglas

34" x 22"

PLOT.CEL

ms consultants, inc.
msconsultants.com

www.msconsultants.com

Ohio DOT Workspace
70\71 East Interchange 2E

PDF: ohdot\V8i
DGN: 60-06634_2E_Columbus

Batchplot Spec: \\msconsultants.com\files\production\03\60\06634_2E\standards\plotdir\batchplt.spc
Pen Table: \\msconsultants.com\files\Standards\astm\ohdot\V8i\ms\plotting\pen\V8i_ms_std.tbl
Plot Driver: \\msconsultants.com\files\Standards\astm\ohdot\v8i\ms\plotting\PDF.pltcfg

Model: Sheet
Printed: 6/19/2018 @ 9:04:38 AM
File: N:\03\60\06634_2E\roadway\sheets\0532200005.dgn

View: FENCE_VIEW1
By: jdoughas

34" x 22"

END 23:1 TAPER, I-70
772+24.63, 1.98' RT
ELEV. = 751.63

BEGIN 22:1 TAPER, I-70
773+33.83, 1.98' RT
ELEV. = 755.74

END 22:1 TAPER, I-70
773+73.81, 0.16' RT
ELEV. = 757.24

BEGIN BARRIER TRANSITION
I-70, 774+16.73, 0.16' RT

END BARRIER TRANSITION
I-70, 774+56.73, 1.84' RT

772 ℄ I-70 773 774

872 PIER #1, BRIDGE # FRA-70-1461P

750.88 751.75 752.58 753.52 754.46 755.40 756.34 757.25 758.16 759.10 760.08

12.00' 12.31'

751.40 752.23 753.06 754.00 754.94 755.88 756.82 757.76 758.70 759.64 760.58

12.00' 752.42 755.14 757.02 12.00'

℄ RAMP N3

751.59 753.26 754.20 756.08 757.96 758.90 759.84 760.77

12.00' 753.23, I-70 772+49.28, 49.98' RT ELEV. = 753.23

BEGIN 25:1 TAPER, I-70
773+11.73, 62.66' RT
ELEV. = 755.07

END 25:1 TAPER, I-70
773+28.74, 61.98' RT
ELEV. = 755.74

751.78 752.61 753.45 754.39 755.33 756.27 757.21 758.15 759.09 760.03 760.97

751.59 12.00' 752.42 753.26 754.20 755.14 756.08 757.02 757.96 758.90 759.84 760.77 12.00'

873

14.33' 753.00 753.66 11.71' 755.59 12.00' 756.54 757.48 758.42 759.36 760.29 12.00'

PIER #2, BRIDGE # FRA-70-1461P

9.67' 753.18 753.88 11.71' 754.53 754.77 755.25 755.63 755.75 STA. 780+13.93, 24.00' LT ELEV. = 755.77

12.24' END 25:1 TAPER, RAMP N4 779+74.45, 24.24' LT ELEV. = 755.25

3.00' 755.85 755.99 756.30

MATCH LINE STA. 778+25.00 RAMP N4 SEE SHEET 1155

750.70 751.46 752.25 753.02 753.73 754.40 755.00 755.56 756.04 756.44 756.78

12.00' 12.00'

779 ℄ RAMP N4 780

750.51 751.26 752.06 752.67, RAMP N4 778+92.67, 12.00' LT ELEV. = 752.79 752.83 753.54 754.20 754.81 755.37 755.87 756.32 756.71

12.00' 12.00' BEGIN 22:1 TAPER, RAMP N4 779+54.29, 25.16' LT ELEV. = 755.33

750.32 751.07 751.87 752.64 753.35 754.01 754.62 755.18 755.70 756.19 756.65

12.00' 12.00' 874

750.08 750.83 751.63 752.40 753.11 753.77 754.38 754.96 755.53 756.08 756.57

749.60 750.35 751.15 751.92 752.63 753.29 753.90 754.48 755.05 755.59 756.10

872

℄ RAMP N1

873

LEGEND
(XXX.XX) - EXISTING ELEV.
XXX.XX - PROPOSED ELEV.

NOTE: ALL ELEVATIONS ARE TO BOTTOM OF CURB

HORIZONTAL SCALE IN FEET
0 5 10 20

CALCULATED CHECKED

GORE DETAIL
I-70 EB AND RAMP N4

FRA-70-14.54

1156
2317

PLOT.CEL

ms consultants, inc.
msconsultants.com

www.msconsultants.com

Ohio DOT Workspace
70\71 East Interchange 2E

0 0.5" 1"

Batchplot Spec: \\msconsultants.com\files\production\03\60\06634_2E\standards\plotdrv\batchplt.spc
Pen Table: \\msconsultants.com\files\Standards\ustn\ohdot\V8i\ms\plotting\pen\V8i_ms_std.tbl
Plot Driver: \\msconsultants.com\files\Standards\ustn\ohdot\v8i\ms\plotting\PDF.pltcfg
CFG: ohdotV8i
DGN: 60-06634_2E_Columbus

34" x 22"

Model: Sheet
Printed: 6/19/2018 @ 9:04:46 AM
File: N:\03\60\06634_2E\roadway\sheets\05322606006.dgn
View: FENCE_VIEW1
By: jdouglas

LEGEND
(XXX.XX) - EXISTING ELEV.
XXX.XX - PROPOSED ELEV.

NOTE: ALL ELEVATIONS
ARE TO BOTTOM OF CURB

HORIZONTAL SCALE IN FEET
0 5 10 20

CALCULATED | CHECKED

GORE DETAILS
RAMP N3 AND RAMP N2

FRA-70-14.54

1157
2317

ms consultants, inc.

PLOT.CEL

ms consultants, inc.
msconsultants.com

www.msconsultants.com

Ohio DOT Workspace
70\71 East Interchange 2E

Batchplot Spec: \\msconsultants.com\files\production\03\60\06634.2E\standards\plotdrv\batchplt.SPC
Pen Table: \\msconsultants.com\files\Standards\astm\ohdot\V8i\ms\plotting\pen\V8i_ms_std.tbl
Plot Driver: \\msconsultants.com\files\Standards\astm\ohdot\v8i\ms\plotting\PDF.plt
PDF: ohdotV8i
DGN: 60-06634_2E_Columbus

Model: Sheet
Printed: 6/19/2018 @ 9:04:49 AM
File: N:\03\60\06634.2E\roadway\sheets\10532260007.dgn
View: SHEET
By: jdouglas

34" x 22"

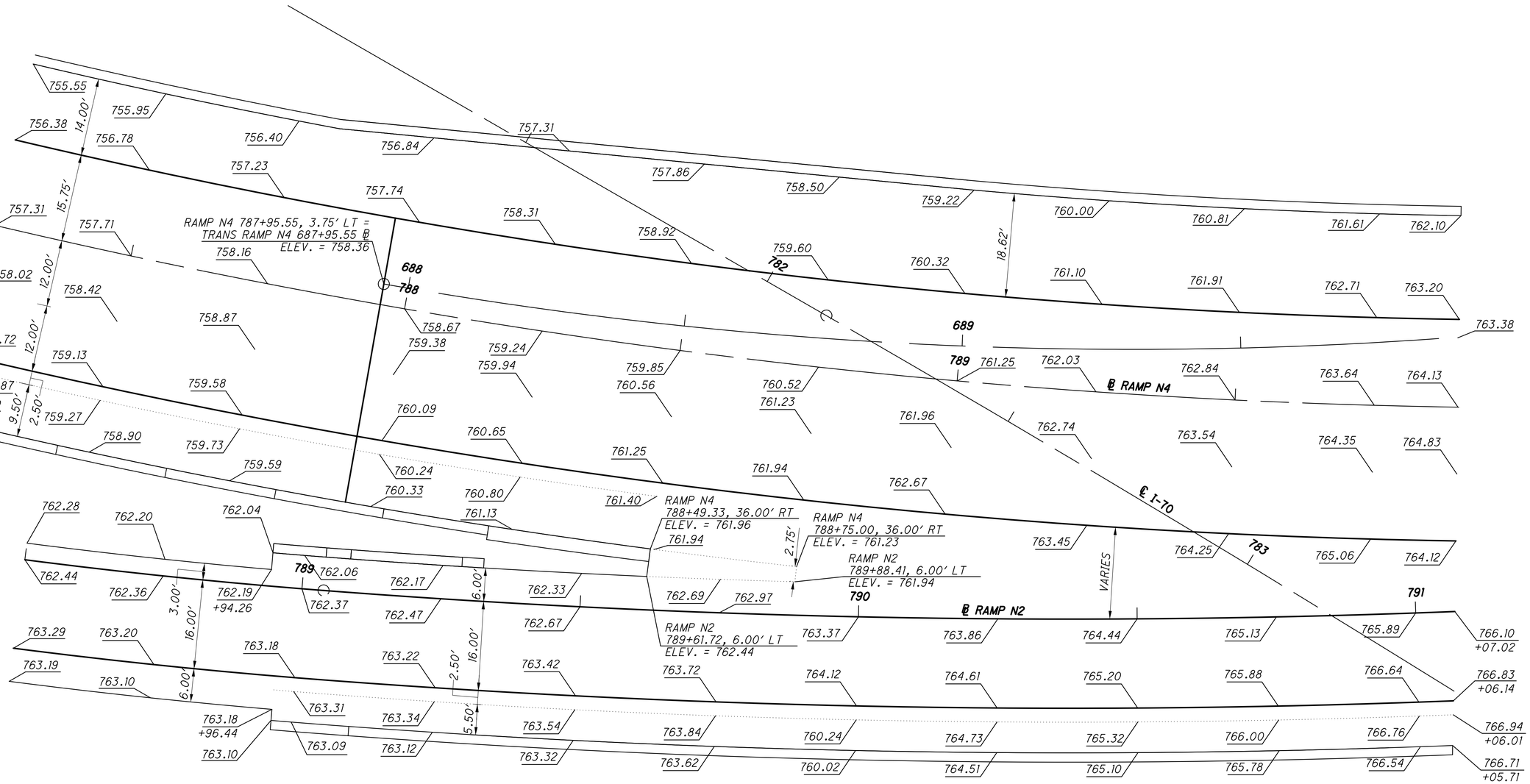

N

HORIZONTAL SCALE IN FEET
0 5 10 20

CALCULATED | CHECKED

GORE DETAILS
RAMP N4 AND RAMP N2

FRA-70-14.54

1158
2317

ms consultants, inc.

PLOT.CEL

ms consultants, inc.
msconsultants.com

Batchplot Spec: \\msconsultants.com\files\production\Q3\60\06634_2E\standards\plotdrv\batchplt.spc
Pen Table: \\msconsultants.com\files\Standards\astm\ohdot\V8i\ms\plotting\pen\V8i_ms_std.tbl
Plot Driver: \\msconsultants.com\files\Standards\astm\ohdot\v8i\ms\plotting\PDF.pltcfg
Model: Sheet
Printed: 6/19/2018 @ 9:04:52 AM
File: N:\03\60\06634_2E\roadway\sheets\0532260016.dgn
View: FENCE_VIEW1
By: jdouglas
34" x 22"

Ohio DOT Workspace
70\71 East Interchange 2E
DCF: ohdot\V8i
DCF: 60-06634_2E_Columbus
www.msconsultants.com

RAMP Q4
Ⓐ 871+36.20, 16.00′ RT
ELEV. = 748.63

I-70
Ⓑ 771+39.15, 76.00′ LT
ELEV. = 748.67

RAMP Q1
Ⓒ 992+46.70, 12.00′ RT
ELEV. = 755.04

I-70
Ⓓ 772+94.02, 40.00′ LT
ELEV. = 755.07

LEGEND
(XXX.XX) - EXISTING ELEV.
XXX.XX - PROPOSED ELEV.

NOTE: ALL ELEVATIONS
ARE TO BOTTOM OF CURB

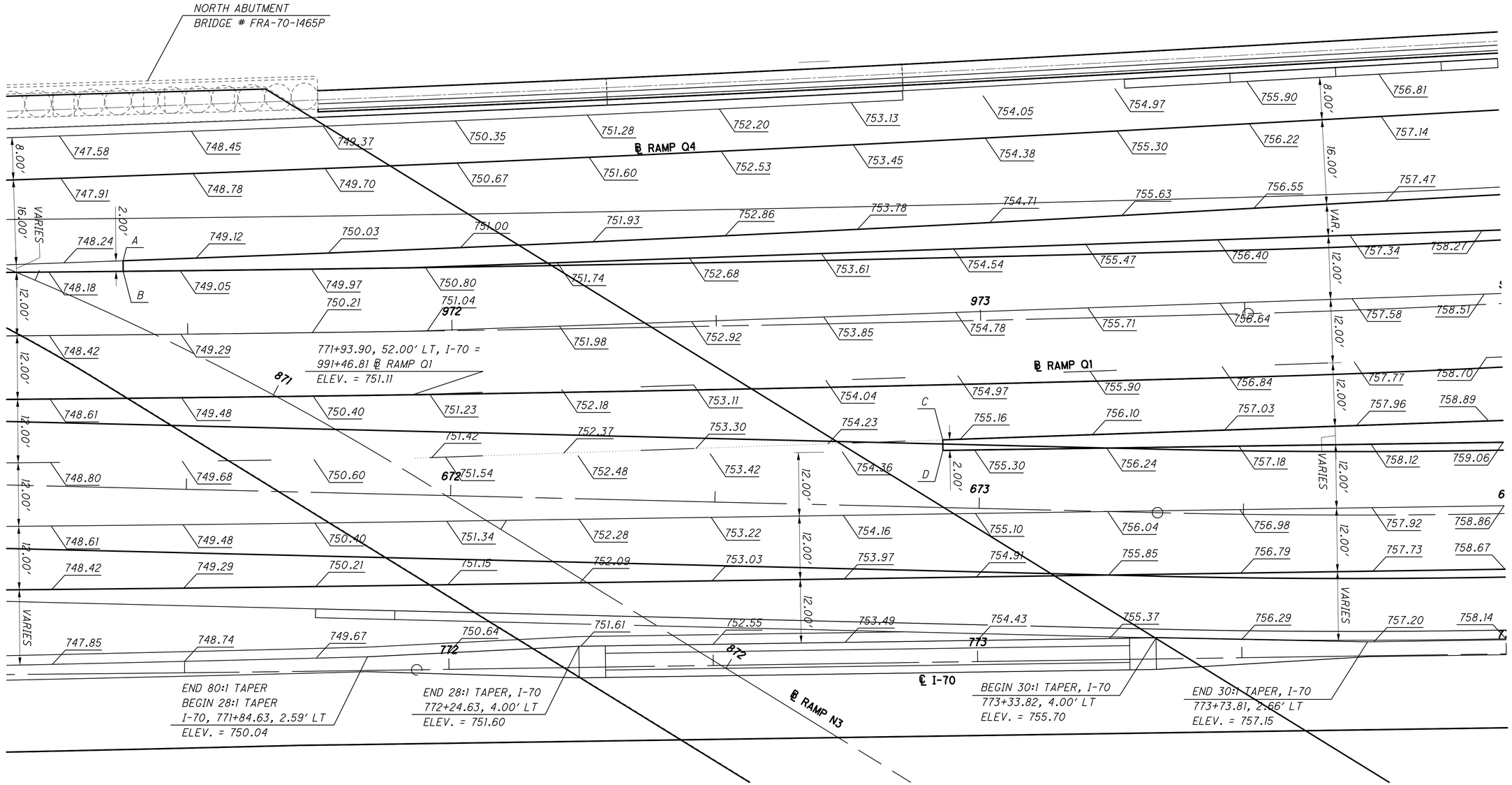

GORE DETAILS
I-70 WB AND RAMP Q1, RAMP Q1 AND RAMP Q4

FRA-70-14.54

1159
2317

PLOT.CEL

ms consultants, inc.
msconsultants.com

www.msconsultants.com

Ohio DOT Workspace
70\71 East Interchange 2E

0 0.5" 1"

Batchplot Spec: \\msconsultants.com\files\production\03\60\06634_2E\standards\oladrv\batchplt.SPC
Pen Table: \\msconsultants.com\files\Standards\astm\ohdot\V8i\ms\plotting\pen\V8i_ms_std.tbl PDF: ohdotV8i
Plot Driver: \\msconsultants.com\files\Standards\astm\ohdot\v8i\ms\plotting\PDF.pltcfg PDF: 60-06634_2E_Columbus

34" x 22"

Model: Sheet View: SHEET
Printed: 6/19/2018 @ 9:04:54 AM By: jdouglas
File: N:\03\60\06634_2E\roadway\sheets\1053260023.dgn

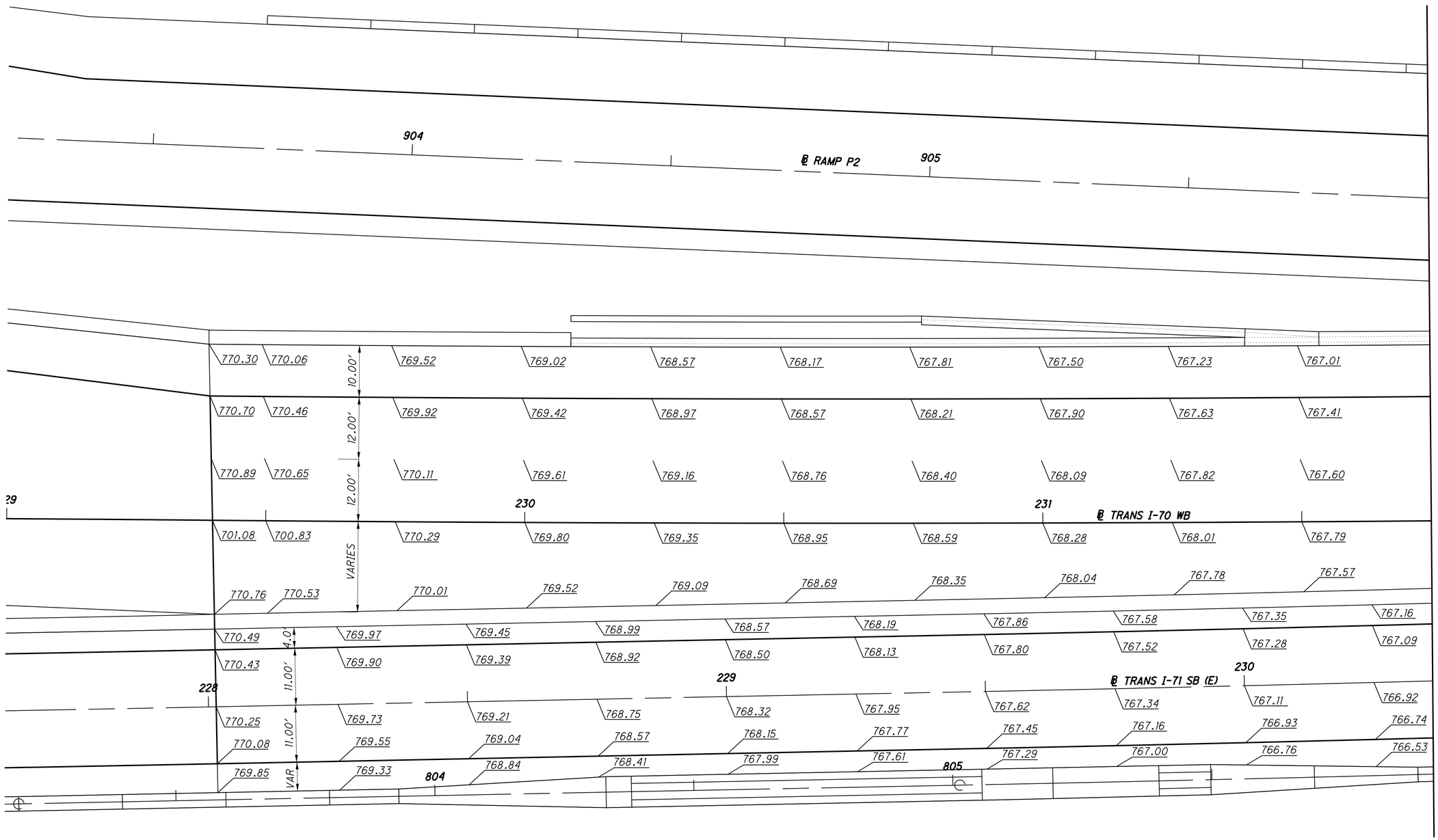

LEGEND

XXX.XX - PROPOSED ELEV.

NOTE: ALL ELEVATIONS
ARE TO BOTTOM OF CURB

0 5 10 20
HORIZONTAL
SCALE IN FEET

CALCULATED | CHECKED

GORE DETAILS
TRANS I-70 WB, TRANS I-71 SB, RAMP P2

FRA-70-14.54

1163
2317

ms consultants, inc.

PLOT.CEL

ms consultants, inc.
msconsultants.com

www.msconsultants.com

Ohio DOT Workspace
70\71 East Interchange 2E

Batchplot Spec: \\msconsultants.com\files\production\03\60\06634.2E\standards\plotdrv\batchplt.spc
Pen Table: \\msconsultants.com\files\Standards\usth\ohdot\V8\ms\plotting\pen\V8i_ms_std.tbl DGN: ohdot.V8i
Plot Driver: \\msconsultants.com\files\Standards\usth\ohdot\V8\ms\plotting\PDF.plt DWG: 60-06634_2E_Columbus

Model: Sheet View: SHEET
Printed: 6/19/2018 @ 9:04:56 AM By: jdouglas
File: N:\03\60\06634_2E\roadway\sheets\1053260024.dgn

34" x 22"

LEGEND

XXX.XX - PROPOSED ELEV.

NOTE: ALL ELEVATIONS ARE TO BOTTOM OF CURB

HORIZONTAL SCALE IN FEET
0 5 10 20

CALCULATED

CHECKED

GORE DETAILS: RAMP P2, TRANS I-70 WB, TRANS I-71 SB, TRANS RAMP P2

FRA-70-14.54

1164
2317

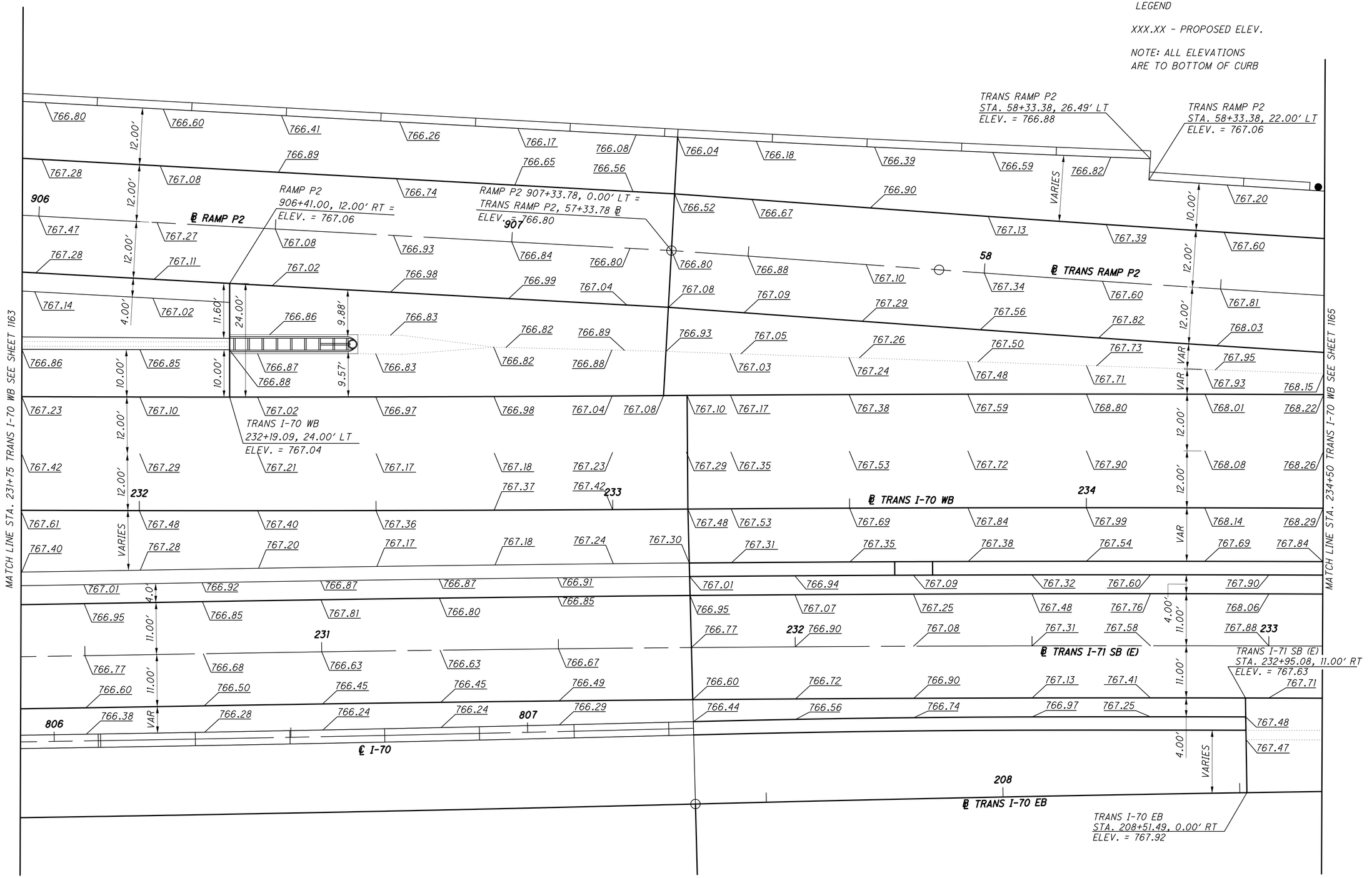

34" x 22"
Model: Sheet View: SHEET
Printed: 6/19/2018 @ 9:04:58 AM By: jdouglas
File: N:\03\60\06634_2E\roadway\sheets\105322G1025.dgn
Batchplot Spec: \\msconsultants.com\files\production\03\60\06634_2E\standards\plotdrv\batchplt.spc
Pen Table: \\msconsultants.com\files\Standards\ustn\ohdot\V8i\ms\plotting\pen\V8i_ms_std.tbl
Plot Driver: \\msconsultants.com\files\Standards\ustn\ohdot\v8i\ms\plotting\PDF.pltcfg
PCF: ohdotV8i
PCF: 60-06634_2E_Columbus
Ohio DOT Workspace
70\71 East Interchange 2E
www.msconsultants.com
ms consultants, inc.
msconsultants.com
PLOT.CEL

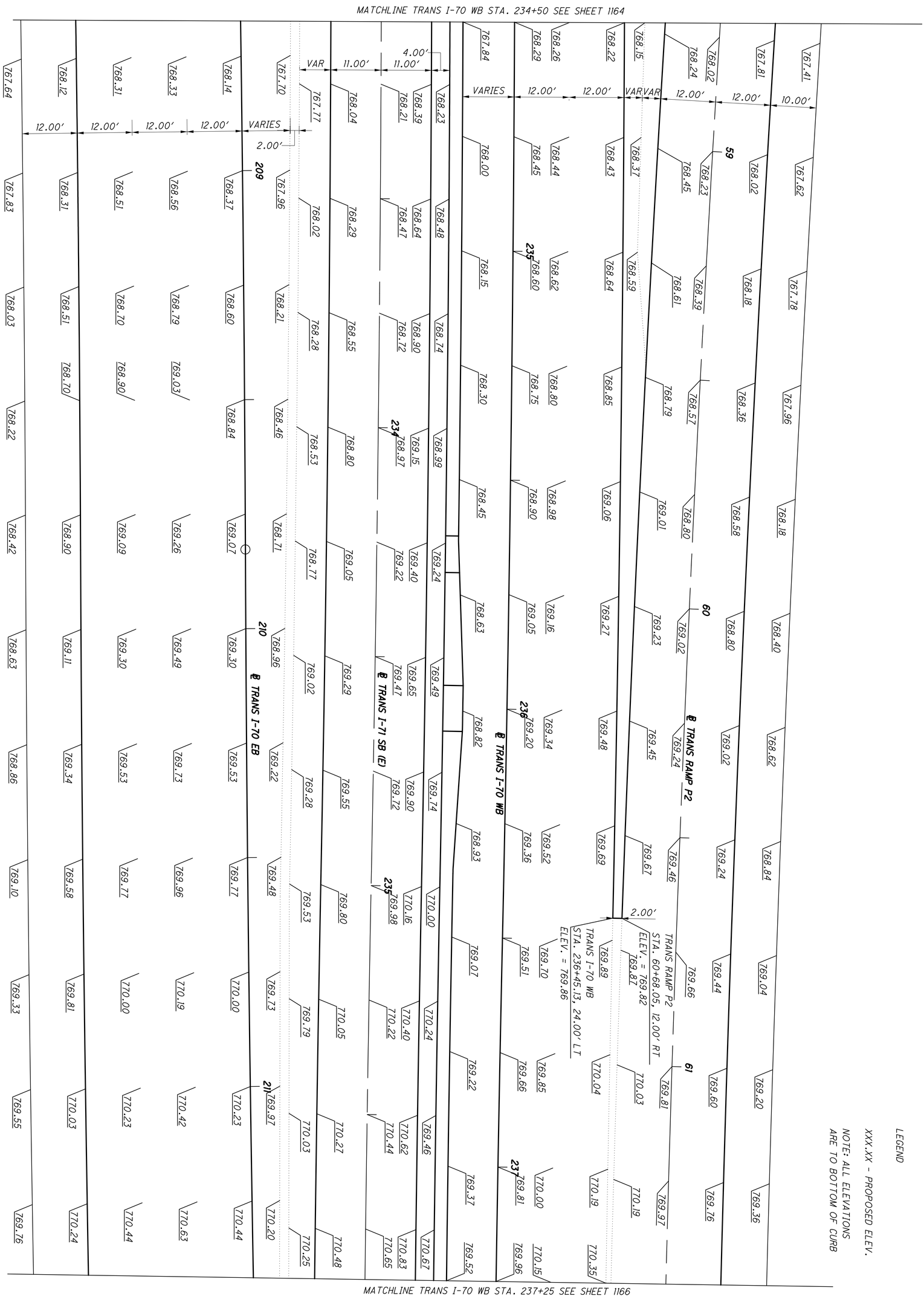

GORE DETAILS: TRANS I-70 WB, TRANS I-70 EB TRANS I-71 SB, AND TRANS RAMP P2

CALCULATED
CHECKED
0 5 10 20
HORIZONTAL SCALE IN FEET

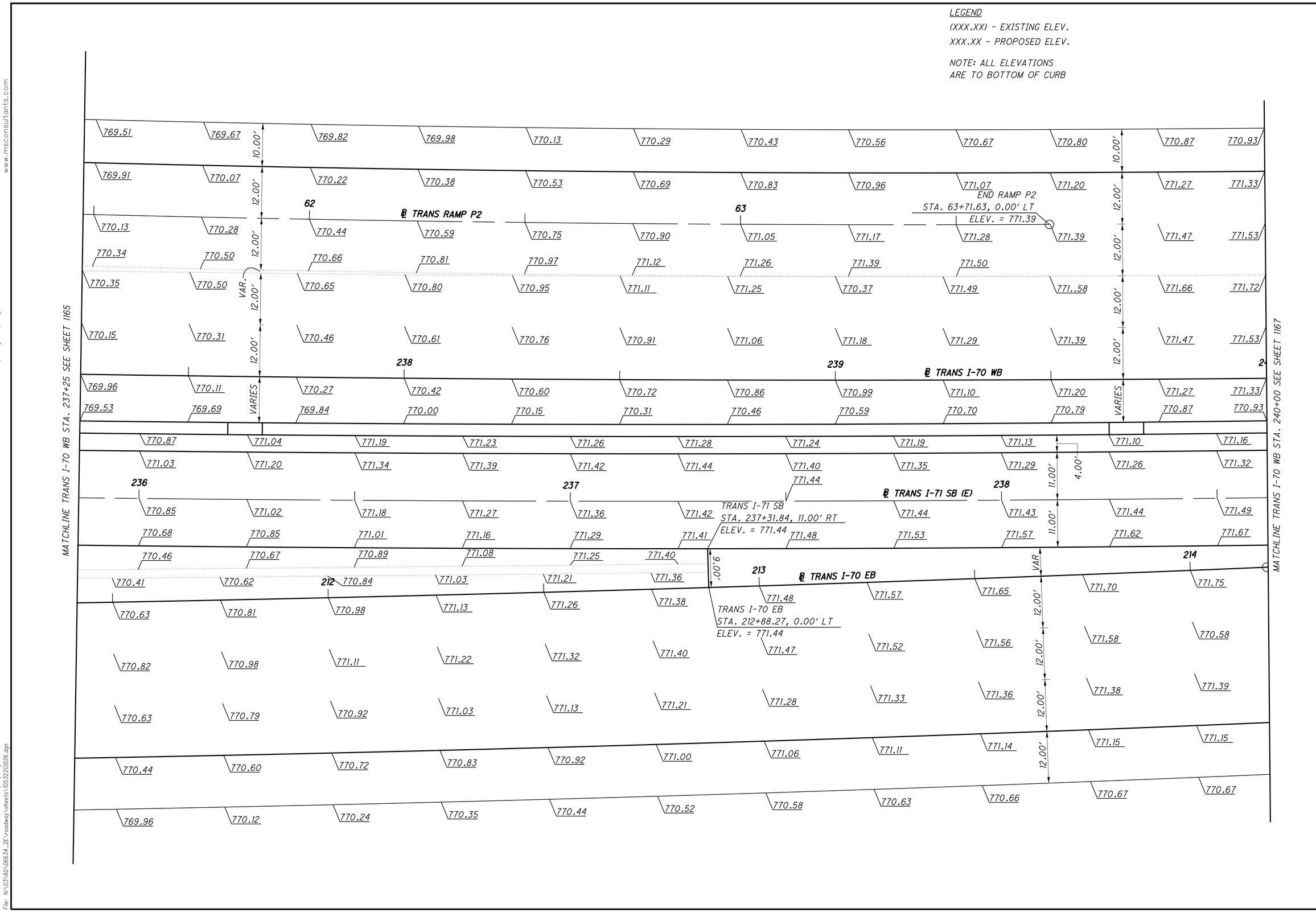

HORIZONTAL SCALE IN FEET

CALCULATED

CHECKED

GORE DETAILS: TRANS I-70 WB, TRANS 1-70 EB TRANS I-71 SB, AND TRANS RAMP P2

FRA-70-14.54

1166
2317

ms consultants, inc.

PLOT.CEL

ms consultants, inc.
msconsultants.com

Ohio DOT Workspace
70\71 East Interchange 2E
www.msconsultants.com

Batchplot Spec: \\msconsultants.com\files\production\03\60\06634_2E\standards\plotdrv\batchplt.spc
Pen Table: \\msconsultants.com\files\Standards\ustn\ohdot\V8i\ms\plotting\pen\V8i_ms_std.tbl
Plot Driver: \\msconsultants.com\files\Standards\ustn\ohdot\v8i\ms\plotting\PDF.pltcfg

Model: Sheet
Printed: 6/19/2018 @ 9:05:00 AM
File: N:\03\60\06634_2E\roadway\sheets\1053220026.dgn
View: SHEET
By: jdouglas

34" x 22"

PLOT.CEL

ms consultants, inc.
msconsultants.com

Ohio DOT Workspace
70\71 East Interchange 2E
www.msconsultants.com

Batchplot Spec: \\msconsultants.com\files\production\03\60\06634_2E\standards\plotdrv\batchplt.spc
Pen Table: \\msconsultants.com\files\Standards\usitn\ohdot\V8i\ms\plotting\pen\V8i_ms_std.tbl
Plot Driver: \\msconsultants.com\files\Standards\usitn\ohdot\v8i\ms\plotting\PDF.pltcfg
PDF: ohdotV8i
DGN: 60-06634_2E_Columbus

Model: Sheet
Printed: 6/19/2018 @ 9:05:01 AM
File: N:\03\60\06634_2E\roadway\sheets\105322G027.dgn
View: FENCE_VIEW1
By: jdouglas

34" x 22"

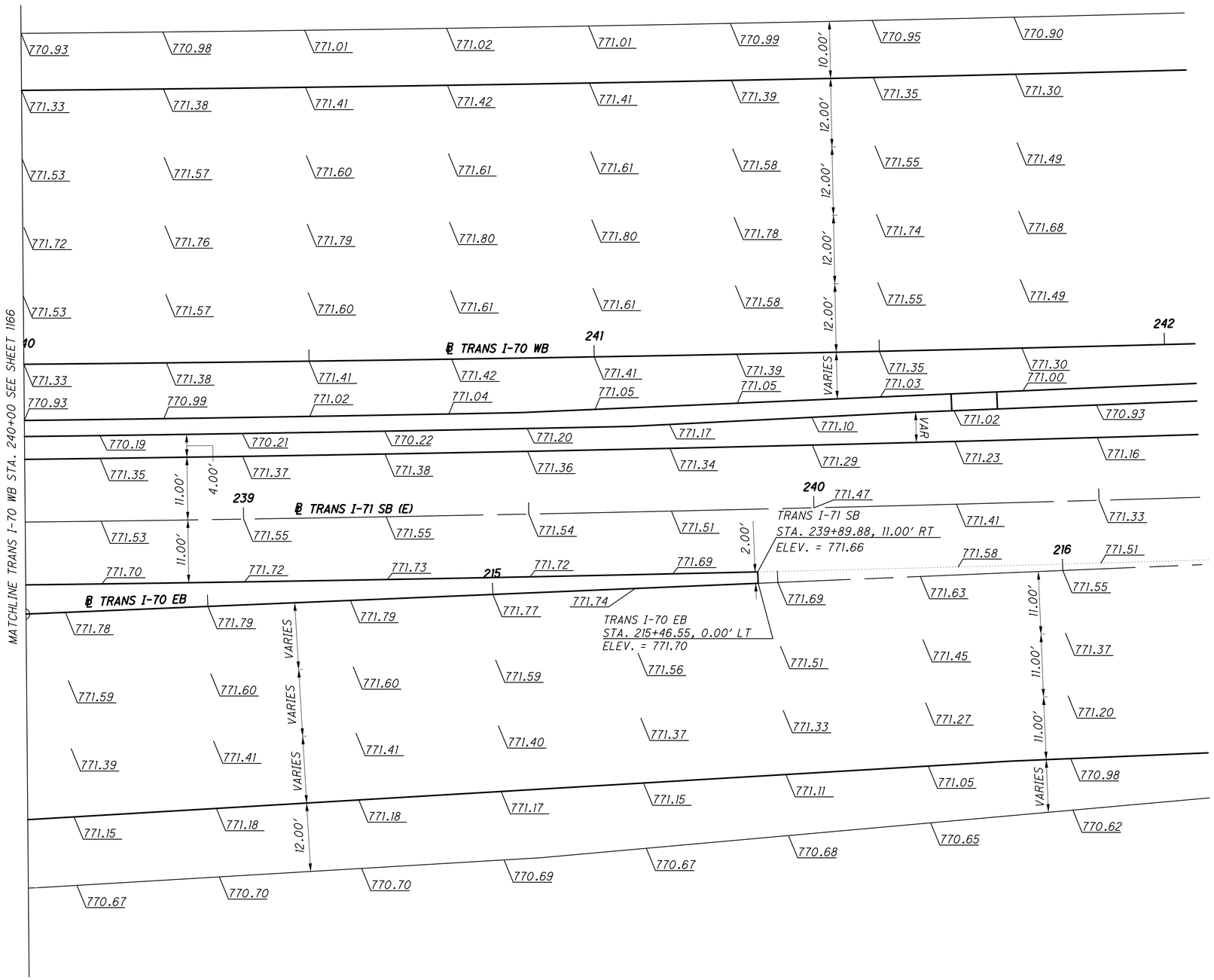

LEGEND

(XXX.XX) - EXISTING ELEV.

XXX.XX - PROPOSED ELEV.

NOTE: ALL ELEVATIONS ARE TO BOTTOM OF CURB

HORIZONTAL SCALE IN FEET
0 5 10 20

CALCULATED | CHECKED

GORE DETAILS

TRANS I-70 WB, TRANS I-71 SB

FRA-70-14.54

1167
2317

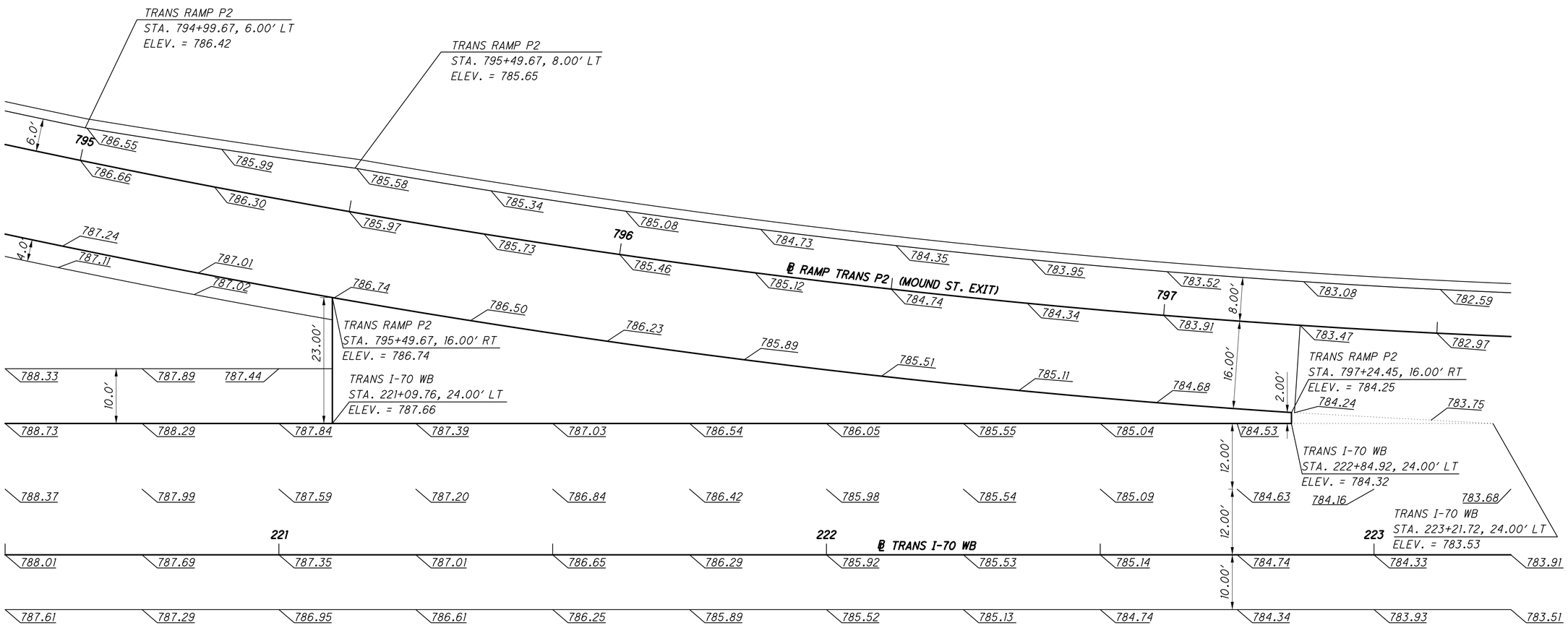

LEGEND

(XXX.XX) - EXISTING ELEV.

XXX.XX - PROPOSED ELEV.

NOTE: ALL ELEVATIONS ARE TO BOTTOM OF CURB

HORIZONTAL SCALE IN FEET 0 5 10 20

CALCULATED

CHECKED

GORE DETAILS
TRANS I-70 WB AND TRANS RAMP P2

FRA-70-14.54

ms consultants, inc.

PLOT.CEL
ms consultants, inc.
msconsultants.com
Ohio DOT Workspace
70\71 East Interchange 2E
www.msconsultants.com
Batchplot Spec: \\msconsultants.com\files\production\03\60\06634_2E\standards\plotdrv\batchplt.spc
Pen Table: \\msconsultants.com\files\Standards\ustn\ohdot\V8i\ms\plotting\pen\V8i_ms_std.tbl
Plot Driver: \\msconsultants.com\files\Standards\ustn\ohdot\v8i\ms\plotting\PDF.pltcfg
34" x 22"
Model: Sheet
Printed: 6/19/2018 @ 9:05:03 AM
File: N:\03\60\06634_2E\roadway\sheets\105322G031.dgn
View: FENCE_VIEW1
By: jdouglas

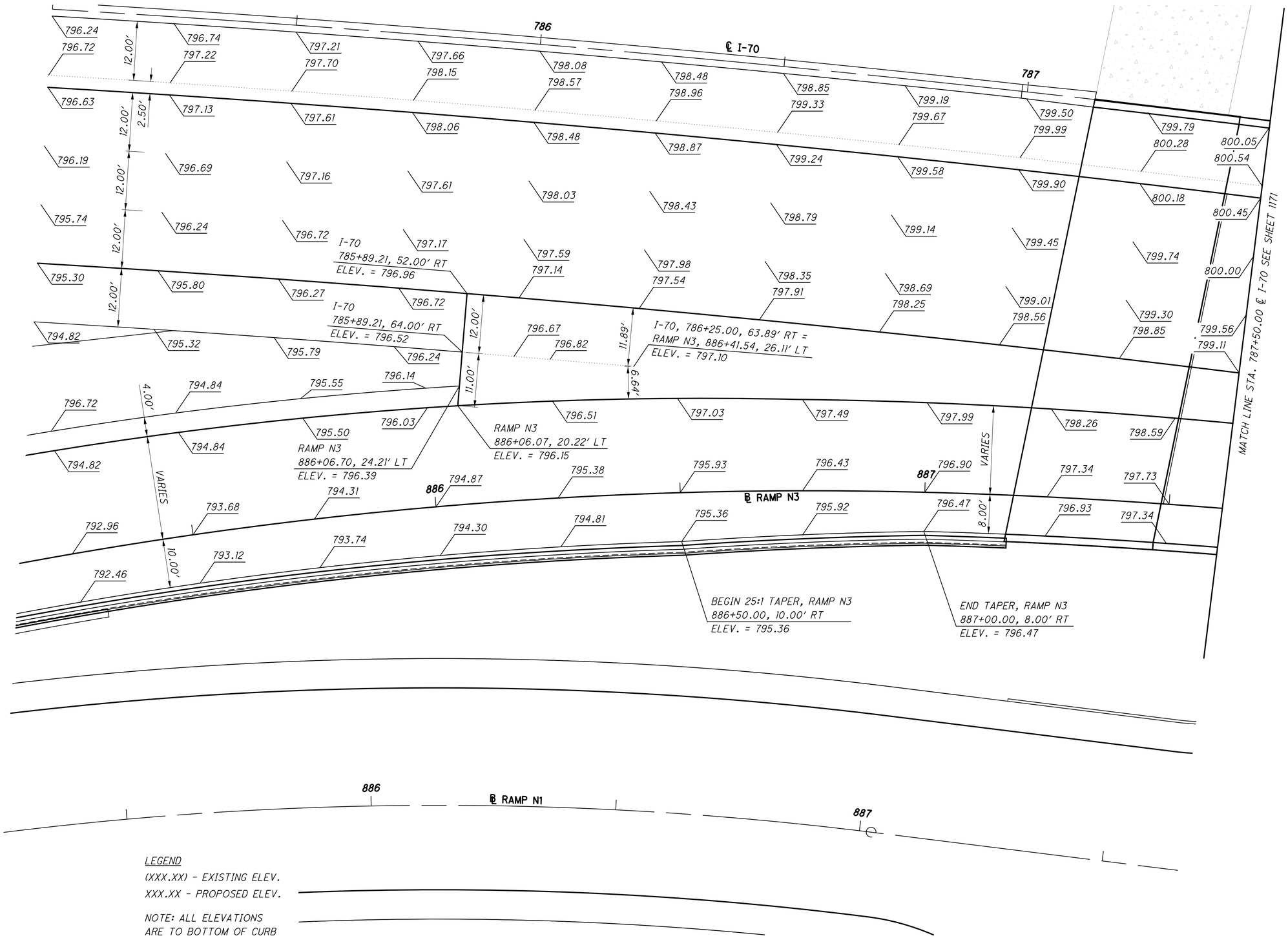

PLOT.CEL

ms consultants, inc.
msconsultants.com

Ohio DOT Workspace
70\71 East Interchange 2E
www.msconsultants.com

Batchplot Spec: \\msconsultants.com\files\production\03\60\06634_2E\standards\plotdrv\batchplt.spec
Pen Table: \\msconsultants.com\files\Standards\ustn\ohdot\V8i\ms\plotting\pen\V8i_ms_std.tbl
Plot Driver: \\msconsultants.com\files\Standards\ustn\ohdot\v8i\ms\plotting\PDF.pltcfg

34" x 22"

Model: Sheet
Printed: 6/19/2018 @ 9:05:08 AM
File: N:\03\60\06634_2E\roadway\sheets\105322G010.dgn
View: FENCE_VIEW1
By: jdouglas

HORIZONTAL SCALE IN FEET
0 5 10 20

CALCULATED
CHECKED

GORE DETAILS
I-70 EB AND RAMP N3

FRA-70-14.54

1170
2317

ms consultants, inc.

LEGEND

(XXX.XX) - EXISTING ELEV.

XXX.XX - PROPOSED ELEV.

NOTE: ALL ELEVATIONS ARE TO BOTTOM OF CURB

HORIZONTAL SCALE IN FEET

CALCULATED

CHECKED

GORE DETAILS
I-70 EB AND RAMP N3

FRA-70-14.54

ms consultants, inc.

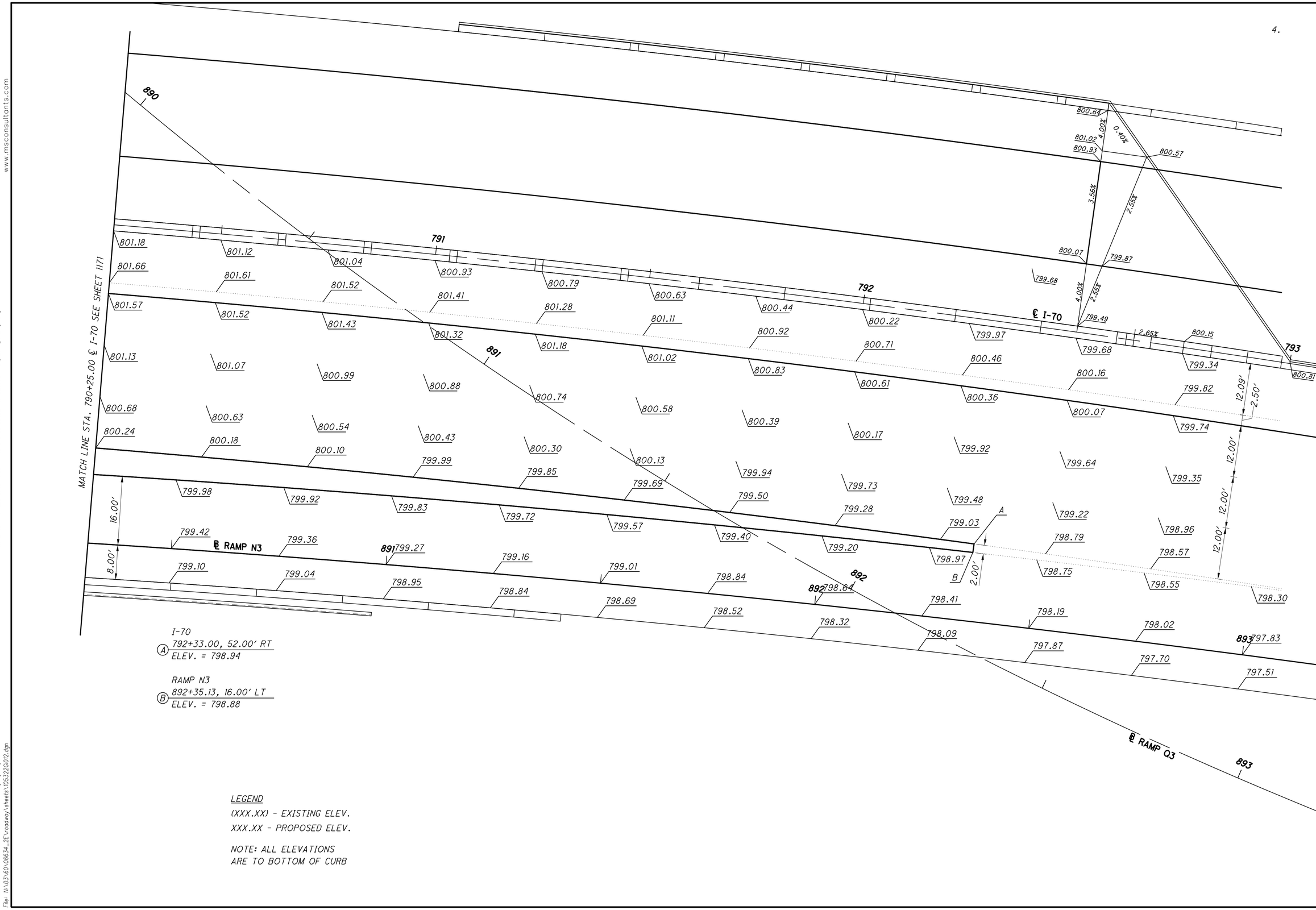

PLOT.CEL

ms consultants, inc.
msconsultants.com

Ohio DOT Workspace
70\71 East Interchange 2E
www.msconsultants.com

Batchplot Spec: \\msconsultants.com\files\production\03\60\06634_2E\standards\plotdrv\batchplt.spc
Pen Table: \\msconsultants.com\files\Standards\ustn\ohdot\V8i\ms\plotting\pen\V8i_ms_std.tbl
Plot Driver: \\msconsultants.com\files\Standards\ustn\ohdot\v8i\ms\plotting\PDF.pltcfg

34" x 22"

Model: Sheet
Printed: 6/19/2018 @ 9:05:15 AM
File: N:\03\60\06634_2E\roadway\sheets\105322G012.dgn
View: FENCE_VIEW1
By: jdouglas

HORIZONTAL SCALE IN FEET
0 5 10 20

CALCULATED
CHECKED

GORE DETAILS
I-70 EB AND RAMP N3

FRA-70-14.54

ms consultants, inc.

PLOT.CEL

ms consultants, inc.
msconsultants.com

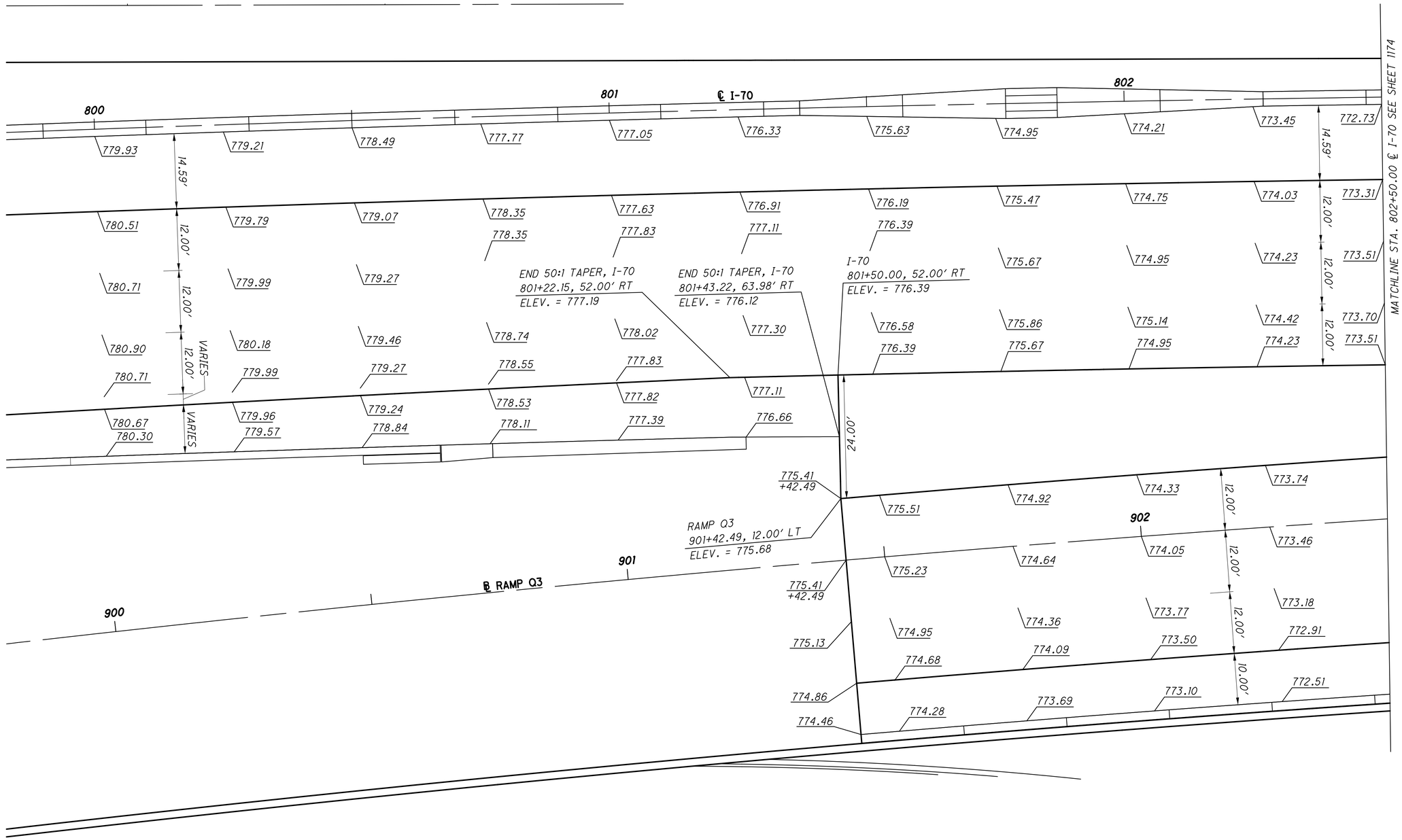

LEGEND
(XXX.XX) - EXISTING ELEV.
XXX.XX - PROPOSED ELEV.

NOTE: ALL ELEVATIONS ARE TO BOTTOM OF CURB

HORIZONTAL SCALE IN FEET
0 5 10 20

CALCULATED | CHECKED

GORE DETAILS
I-70 EB AND RAMP Q3

FRA-70-14.54

1173
2317

ms consultants, inc.

Batchplot Spec: \\msconsultants.com\files\production\Q3\60\06634_2E\standards\plotdir\batchplt.spc
Pen Table: \\msconsultants.com\files\Standards\ustn\ohdot\V8i\ms\plotting\pen\V8i_ms_std.tbl
Plot Driver: \\msconsultants.com\files\Standards\ustn\ohdot\v8i\ms\plotting\PDF.pltcfg
Ohio DOT Workspace
70\71 East Interchange 2E
www.msconsultants.com
PDF: ohdot\V8i
DGN: 60-06634_2E_Columbus
Model: Sheet
Printed: 6/19/2018 @ 9:05:17 AM
File: N:\03\60\06634_2E\roadway\sheets\1053220013.dgn
View: FENCE_VIEW1
By: jdouglas
34" x 22"

PLOT.CEL

ms consultants, inc.
msconsultants.com

Ohio DOT Workspace
70\71 East Interchange 2E
www.msconsultants.com

1"
0.5"
0

Batchplot Spec: \\msconsultants.com\Files\production\03\60\06634_2E\standards\plotdr\batchplt.spc
Pen Table: \\msconsultants.com\Files\Standards\ustn\ohdot\V8i\ms\plotting\pen\V8i_ms_std.tbl
Plot Driver: \\msconsultants.com\Files\Standards\ustn\ohdot\v8i\ms\plotting\PDF.pltcfg
PDF: ohdotV8i
PCF: 60-06634_2E_Columbus

Model: Sheet
Printed: 6/19/2018 @ 9:05:20 AM
File: N:\03\60\06634_2E\roadway\sheets\05322G014.dgn
View: FENCE_VIEW1
By: jdouglas

34" x 22"

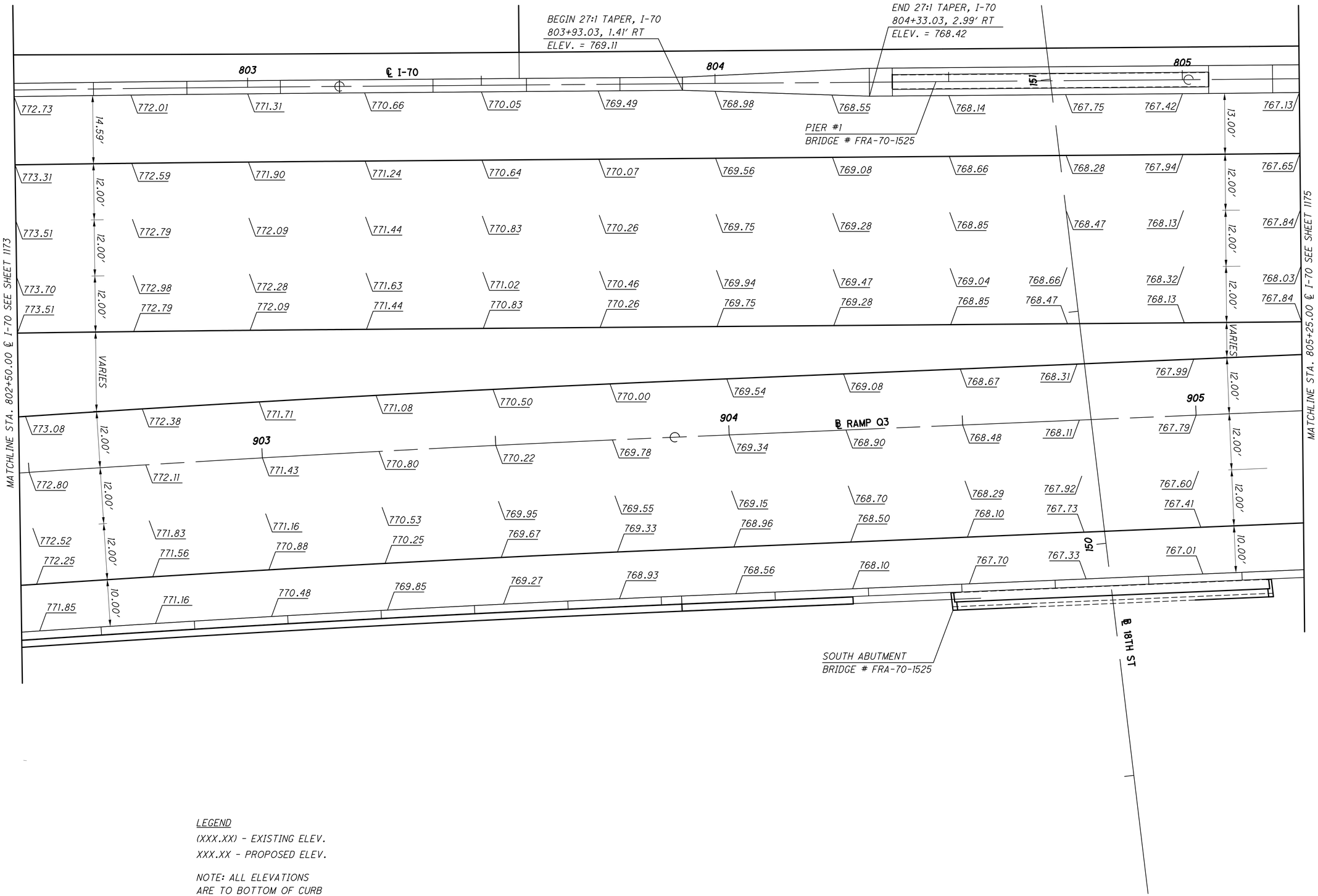

LEGEND
(XXX.XX) - EXISTING ELEV.
XXX.XX - PROPOSED ELEV.

NOTE: ALL ELEVATIONS
ARE TO BOTTOM OF CURB

N

HORIZONTAL
SCALE IN FEET
0 5 10 20

CALCULATED | CHECKED

GORE DETAILS
I-70 EB AND RAMP Q3

FRA-70-14.54

1174
2317

PLOT.CEL

ms consultants, inc.
msconsultants.com

www.msconsultants.com

Ohio DOT Workspace
70\71 East Interchange 2E

PDF: ohdot\V8i
PCF: 60-06634_2E_Columbus

Batchplot Spec: \\vnsconsultants.com\files\production\03\60\06634_2E\standards\plotdr\batchplt.spc
Pen Table: \\vnsconsultants.com\files\Standards\usth\ohdot\V8i\ms\plotting\pen\V8i_ms_std.tbl
Plot Driver: \\vnsconsultants.com\files\Standards\usth\ohdot\v8i\ms\plotting\PDF.pltcfg

Model: Sheet
Printed: 6/19/2018 @ 9:05:22 AM
File: N:\03\60\06634_2E\roadway\sheets\05322d005.dgn
View: FENCE_VIEW1
By: jdouglas

34" x 22"

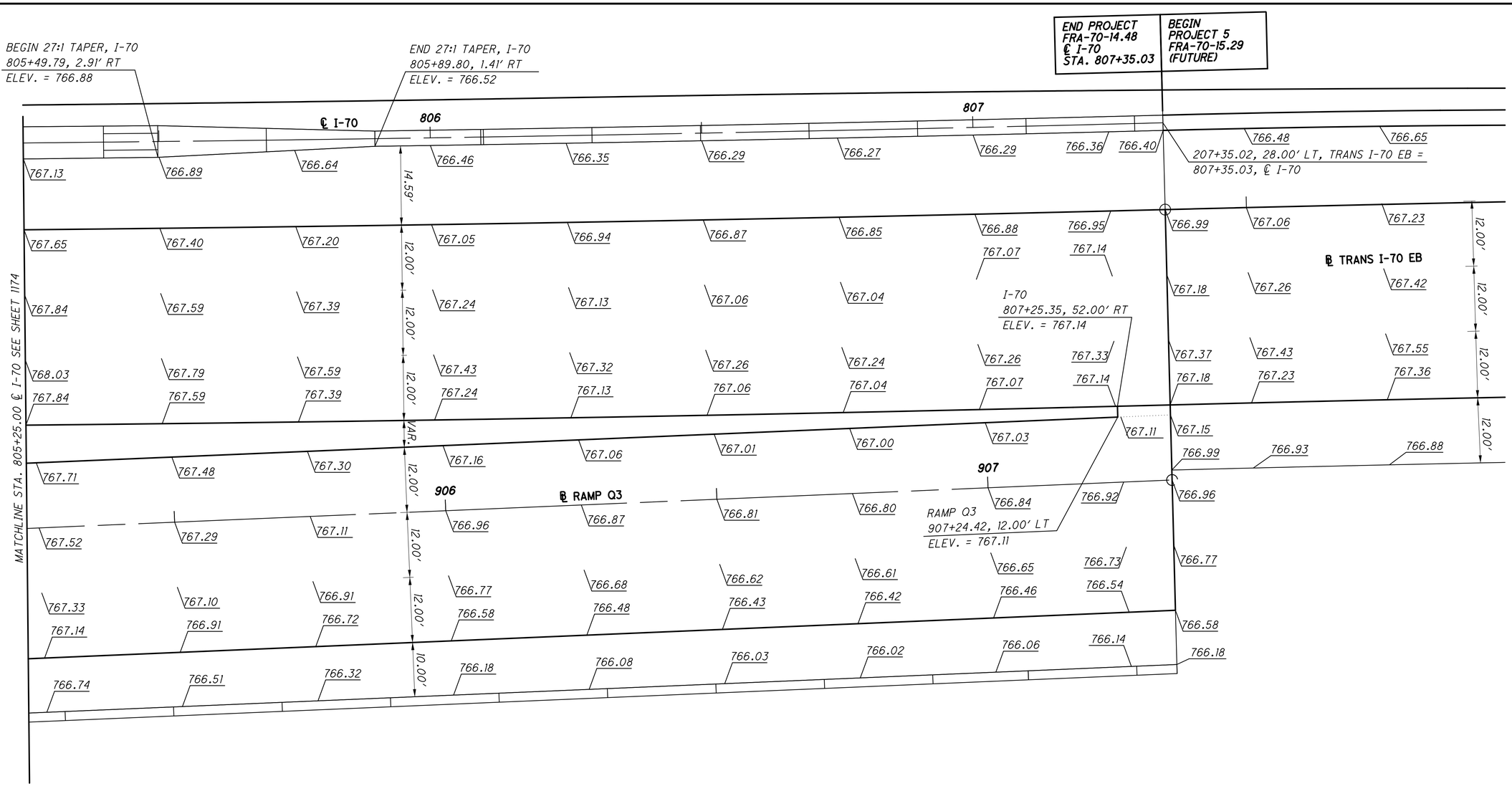

LEGEND

(XXX.XX) - EXISTING ELEV.

XXX.XX - PROPOSED ELEV.

NOTE: ALL ELEVATIONS
ARE TO BOTTOM OF CURB

N

HORIZONTAL
SCALE IN FEET
0 5 10 20

CALCULATED | CHECKED

GORE DETAILS
I-70 EB AND RAMP Q3

FRA-70-14.54

1175
2317

ms consultants, inc.

PLOT.CEL

ms consultants, inc.
msconsultants.com

www.msconsultants.com

Ohio DOT Workspace
70\71 East Interchange 2E

0 0.5" 1"

Batchplot Spec: \\msconsultants.com\files\production\03\60\06634_2E\standards\plotdrv\batchplt.SPC
Pen Table: \\msconsultants.com\files\Standards\usth\ohdot\V8i\ms\plotting\pen\V8i_ms_std.TBL PDF: ohdot.V8i
Plot Driver: \\msconsultants.com\files\Standards\usth\ohdot\V8i\ms\plotting\PDF.pltcfg PDF: 60-06634_2E_Columbus

Model: Sheet View: SHEET
Printed: 8/1/2018 @ 2:08:15 PM By: jdougos
File: N:\03\60\06634_2E\roadway\sheets\05327GM008.dgn

34" x 22"

NOTE 1: THE FOLLOWING SHEETS OF STD. DWG. 2319 ARE NOT SHOWN IN THIS PLAN SET AS THE RAMP TYPES ARE NOT USED ON THIS PROJECT. THE OMITTED SHEETS ARE AVAILABLE FROM THE CITY'S WEB SITE IF NEEDED. OMITTED SHEET : 5, 6, 8, 9, 12, AND 15-18 OF 21.

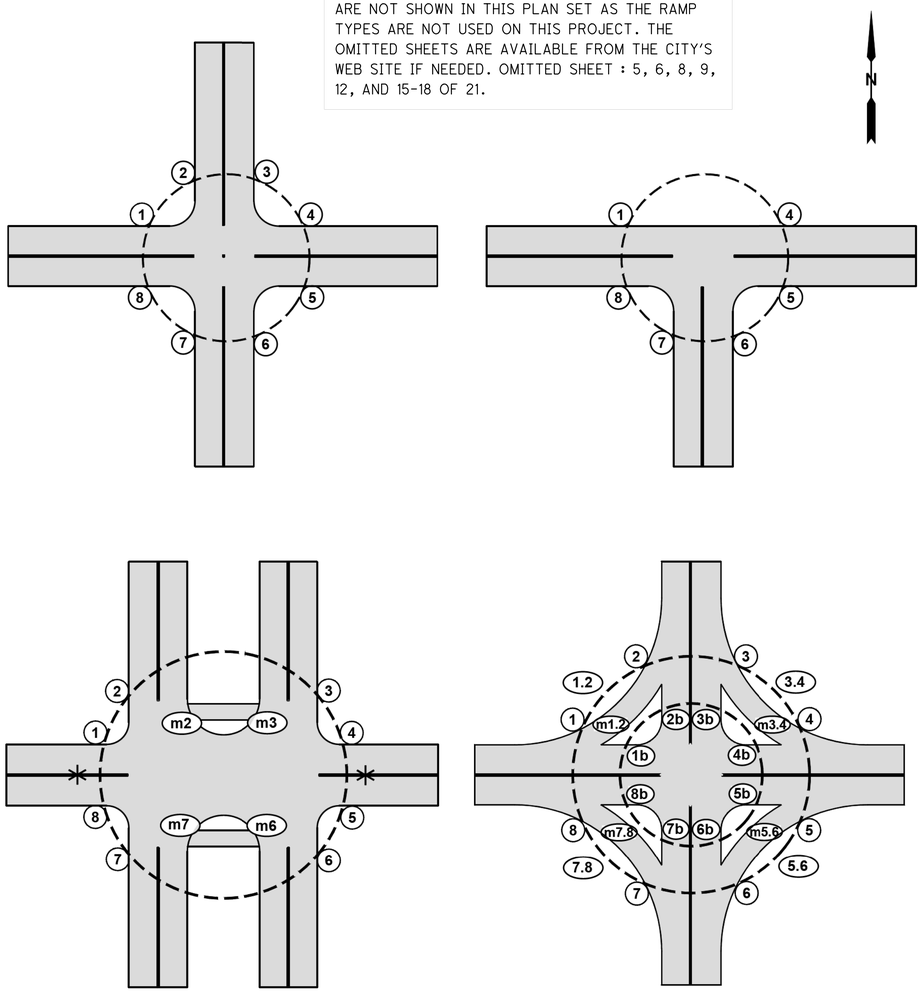

ALL NUMBERING BEGINS FROM THE NORTHWEST CORNER AND GOES CLOCKWISE. EACH CORNER HAS ITS SPECIFIC NUMBER THAT SHALL BE USED IF CURB RAMPS ARE IN THESE LOCATIONS.

* MEDIAN RAMPS ON THE WEST AND/OR EAST LEGS WOULD BE M1, M8, AND M4, M5 RESPECTIVELY.

INTERSECTION CURB RAMP NUMBERING SYSTEM

CITY OF COLUMBUS, OHIO
DEPARTMENT OF PUBLIC SERVICE
DIVISION OF DESIGN AND CONSTRUCTION

CITY ENGINEER

STD DWG 2319
3/30/2018
SHT 1 OF 21

GENERAL NOTES, CURB RAMPS

1. CURB RAMPS SHALL BE INSTALLED PER STD DWGS 2300, 2319, CMSC 608, AND DPS ADA RULES AND REGULATIONS.
2. MATERIAL: THE RAMP PANEL AND FLARED SIDES SHALL BE CONCRETE.
3. RAMP TYPES ARE CATEGORIZED BELOW IN TIERS BY REQUIRED ORDER OF USE. LOCATING THE RAMP AS CLOSE AS POSSIBLE TO THE INTERSECTION FOLLOWING THE CURB RAMP DESIGN BOUNDARY CONTAINED IN THE ADA RULES AND REGULATIONS IS THE FIRST PRIORITY. THE DESIGNER SHALL NOT USE A LOWER TIERED RAMP WITHOUT FIRST DETERMINING AND HAVING JUSTIFICATION THAT THE UPPER TIER RAMPS ARE NOT CONSTRUCTIBLE.

CITY OF COLUMBUS RAMP TYPE HIERARCHY

TIER 1 (THESE PERPENDICULAR RAMPS SHOULD BE UTILIZED WHENEVER POSSIBLE.)
- TYPE D
- TYPE C
- TYPE A

TIER 2 (PARALLEL RAMPS SHOULD ONLY BE USED DUE TO RIGHT OF WAY (ROW) OR OTHER SPACE CONSTRAINTS WHERE A TIER 1 RAMP CANNOT BE USED.)
- TYPE P-6 (6' OF ROW AVAILABLE)
- TYPE P-7 (7' OF ROW AVAILABLE)
- TYPE P-5 (5' OF ROW AVAILABLE)
- TYPE P-4 (4' OF ROW AVAILABLE)

TIER 3 (TIER 3 RAMPS CAN ONLY BE USED WITH WRITTEN APPROVAL BY THE CITY ENGINEER OR DESIGNEE. TIER 3 RAMPS SHALL BE IDENTIFIED IN THE DESIGN SCOPE OR APPROVAL REQUESTED BY THE DESIGNER JUSTIFYING THAT THIS RAMP TYPE IS NECESSARY.)
- TYPE J (MODIFIED ALLEY RAMP), USE SHOULD BE LIMITED DUE TO DRAINAGE CONCERNS
- RADIAL RAMPS
- SINGLE SHARED RAMPS

SPECIALTY RAMPS (SHALL ONLY BE USED FOR THE LISTED SITUATION, OR WRITTEN APPROVAL BY THE CITY ENGINEER OR DESIGNEE.)
- TYPE G - ONLY TO BE USED ON ALLEY CROSSINGS
- TYPE H - ONLY TO BE USED ON ALLEY CROSSINGS
- TYPE L-1 - ONLY FOR MEDIAN CROSSINGS
- TYPE L-2 - ONLY FOR MEDIAN CROSSINGS
- PEDESTRIAN PADS - USED FOR ACCESS TO PUSHBUTTONS WHERE THERE IS NO EXISTING SIDEWALK. THE INTENT IS TO PROVIDE ACCESS TO CROSS THE INTERSECTION IN BOTH DIRECTIONS WITHOUT ENTERING THE STREET TO ACCESS TO OTHER CROSSING. THE FOLLOWING IS THE ORDER OF PREFERENCE ON PEDESTRIAN PADS:
  1. PP-1 TWO CONNECTED RAMPS WITH UTILITY STRIP
  2. PP-2 TWO CONNECTED RAMPS WITH SIDEWALK AGAINST CURB
  3. PP-3 USED AS SINGLE SHARED RAMP THAT CAN ACCESS BOTH CROSSWALK LEGS AND THE PUSHBUTTON
  4. PP-3 USED TO ONLY ACCESS THE LEG OF THE INTERSECTION CONTROLLED BY THE PUSHBUTTON

4. RAMP RUNNING SLOPE: THE RUNNING SLOPE SHALL BE NO GREATER THAN 7.69%.
5. ALL JOINTS BETWEEN NEW AND EXISTING MATERIALS SHALL BE FLUSH.
6. LANDINGS:
   - LANDINGS SHALL HAVE A MAXIMUM 1.56% SLOPE IN ALL DIRECTIONS FOR ALL CURB RAMP TYPES.
   - A PARALLEL RAMP, CONSTRAINED ON TWO (2) SIDES, E.G., TYPE P-7, SHALL HAVE A LANDING 5-FT WIDE BY 5-FT DEEP A PARALLEL RAMP, CONSTRAINED ON ONE (1) SIDE, E.G., TYPES P-4, 5, & 6, SHALL HAVE A LANDING NO LESS THAN 4-FT MINIMUM BY 5-FT. THE 5-FT DIMENSION SHALL BE PROVIDED AS SHOWN IN THESE STANDARD DRAWINGS.

CURB RAMP GENERAL NOTES

CITY OF COLUMBUS, OHIO
DEPARTMENT OF PUBLIC SERVICE
DIVISION OF DESIGN AND CONSTRUCTION

STD DWG 2319
3/30/2018
SHT 2 OF 21

CALCULATED | CHECKED

MISC. DETAILS - CONCRETE WALK, CURB RAMP DETAILS

FRA-70-14.54

1195
2317

ms consultants, inc.

PLOT.CEL

ms consultants, inc.
msconsultants.com

Ohio DOT Workspace
70\71 East Interchange 2E
www.msconsultants.com

1"
0
0.5"

Batchplot Spec: \\msconsultants.com\files\production\03\60\06634_2E\standards\plotdrv\batchplt.spc
Pen Table: \\msconsultants.com\files\Standards\astm\ohdot\V8i\ms\plotting\pen\V8i_ms_std.tbl PDF: ohdotV8i
Plot Driver: \\msconsultants.com\files\Standards\astm\ohdot\v8i\ms\plotting\PDF.plt.cfg PDF: 60-06634_2E_Columbus

Model: Sheet
Printed: 7/31/2018 @ 12:04:01 PM View: SHEET
File: N:\03\60\06634_2E\roadway\sheets\105322GM009.dgn By: jdouglas

34" x 22"

- ALL PERPENDICULAR RAMPS SHALL HAVE A LANDING NO LESS THAN 4-FT MINIMUM BY 4-FT. A PERPENDICULAR RAMP THAT IS CONSTRAINED AT THE BACK OF SIDEWALK SHALL HAVE A LANDING 4-FT BY 5-FT. THE 5-FT DIMENSION SHALL BE PROVIDED IN THE DIRECTION OF RAMP RUN, AS SHOWN IN THESE STANDARD DRAWINGS.
- LANDING AT INTERSECTING SIDEWALKS - WHEREVER SIDEWALKS INTERSECT, THERE SHALL BE A LANDING.

7. STREET COUNTER SLOPE: THE COUNTER SLOPE AT THE BASE OF THE RAMP SHALL BE A MAXIMUM OF 5% FOR A MINIMUM OF 2-FT.
8. CLEAR SPACE: AT MARKED CROSSINGS THE RAMP AND STREET CLEAR SPACE MUST BE FULLY CONTAINED WITHIN THE MARKED CROSSWALK. AT UNMARKED CROSSINGS THE RAMP AND CLEAR MUST BE WITHIN THE CURB RAMP DESIGN BOUNDARY.
9. SURFACES: RAMP, FLARE, AND LANDING SURFACES MUST BE STABLE AND SLIP RESISTANT. RAMPS SHALL BE BROOM FINISHED, TRANSVERSE TO THE DIRECTION OF TRAVEL. GRATINGS, VALVE BOXES, AND UTILITY BOXES SHALL NOT BE LOCATED IN THE RAMP OR LANDING.
10. DETECTABLE WARNINGS: DETECTABLE WARNINGS SHALL BE INSTALLED ACCORDING TO THESE STANDARD DRAWINGS, CMSC 608, AND DPS ADA RULES AND REGULATIONS.
11. CURB WALLS MAY BE NECESSARY FOR CURB RAMP CONSTRUCTION WHERE SPACE RESTRICTION DO NOT ALLOW FOR GRADING WITHIN ROW AT A 3:1 SLOPE OR FLATTER. THE MAXIMUM HEIGHT OF 6" THICK, NON-REINFORCED CURB WALL IS 12" ABOVE THE SIDEWALK SURFACE. THE BURIED PORTION OF THE NON-REINFORCED CURB WALL SHALL BE EQUAL TO THE EXPOSED REVEAL. RETAINING EMBANKMENT TO A HEIGHT OF MORE THAN 12" ABOVE THE SIDEWALK WILL REQUIRE A DESIGNED RETAINING WALL OR CELLULAR WALL.
12. RAMPS MUST BE CONSTRUCTED TO ALLOW FOR POSITIVE DRAINAGE. THE RAMP ITSELF SHALL NOT HOLD EXCESS WATER AND THE ADJACENT PAVEMENT SHALL NOT BE ALTERED TO INHIBIT FLOW OF WATER. IF AN EXISTING CONSTRAINT PREVENTS BUILDING THE RAMP AND ADJACENT AREA WITH POSITIVE DRAINAGE IT MUST BE BROUGHT TO THE CITY'S ATTENTION PRIOR TO CONSTRUCTION AND FINAL DESIGN APPROVED BY THE CITY.

CURB RAMP GENERAL NOTES

CITY OF COLUMBUS, OHIO
DEPARTMENT OF PUBLIC SERVICE
DIVISION OF DESIGN AND CONSTRUCTION

STD DWG 2319
3/30/2018
SHT 3 OF 21

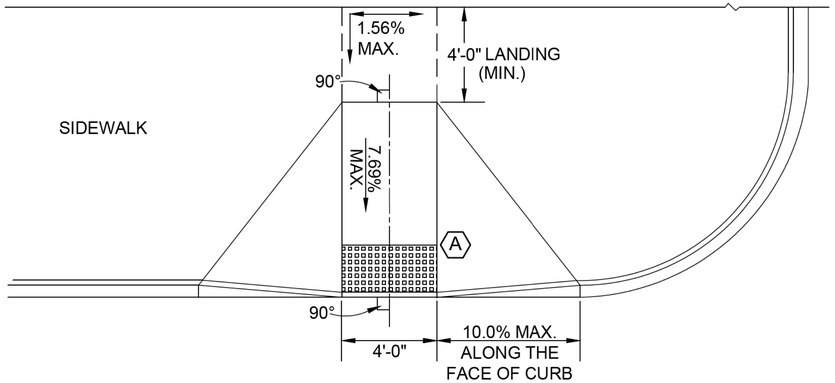

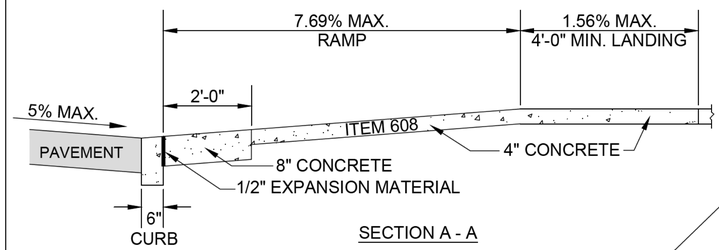

SECTION A - A

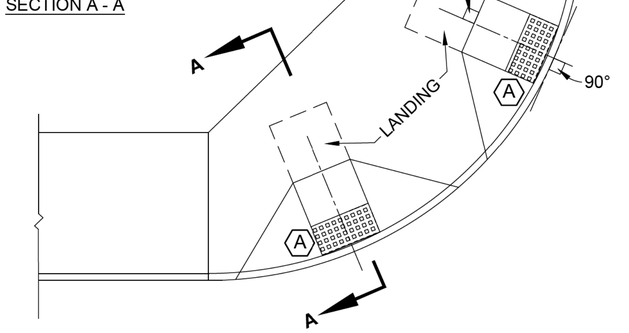

CODED NOTES:

(A) SEE SHEET 21 FOR DETECTABLE WARNING DETAILS

GENERAL NOTES:

1. SEE SHEET 2 FOR ADDITIONAL DETAILED INFORMATION.

CURB RAMP TYPE A

CITY OF COLUMBUS, OHIO
DEPARTMENT OF PUBLIC SERVICE
DIVISION OF DESIGN AND CONSTRUCTION

STD DWG 2319
3/30/2018
SHT 4 OF 21

CALCULATED | CHECKED

MISC. DETAILS - CONCRETE WALK, CURB RAMP DETAILS

FRA-70-14.54

1196
2317

ms consultants, inc.

PLOT.CEL
ms consultants, inc.
msconsultants.com
www.msconsultants.com
Ohio DOT Workspace
70\71 East Interchange 2E
PDF: ohdot\V8i
PDF: 60-06634_2E_Columbus
Batchplot Spec: \\msconsultants.com\files\production\03\60\06634_2E\standards\plotdr\batchplt.spc
Pen Table: \\msconsultants.com\files\Standards\ustn\ohdot\V8i\ms\plotting\pen\V8i_ms_std.tbl
Plot Driver: \\msconsultants.com\files\Standards\ustn\ohdot\V8i\ms\plotting\PDF.pltcfg
Model: Sheet
Printed: 7/31/2018 @ 12:04:18 PM
File: N:\03\60\06634_2E\roadway\sheets\105220M010.dgn
View: FENCE_VIEW1
By: jdouglas
34" x 22"

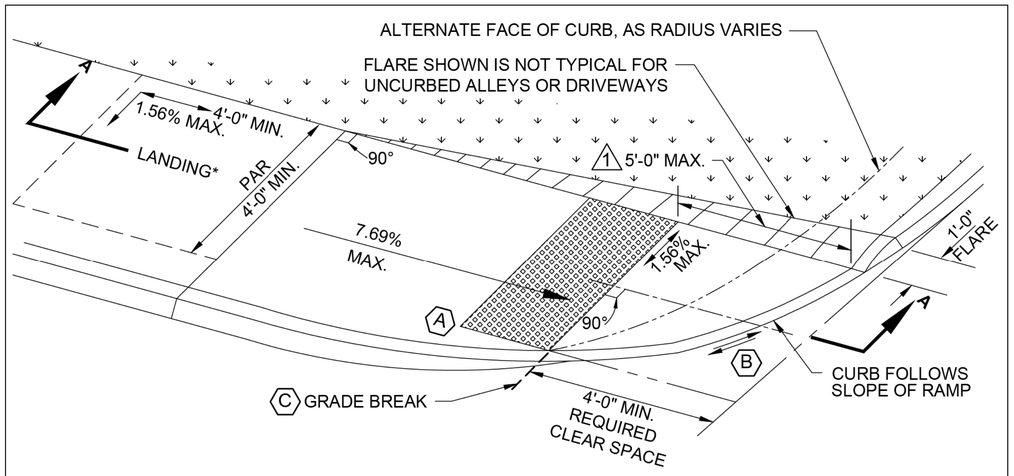

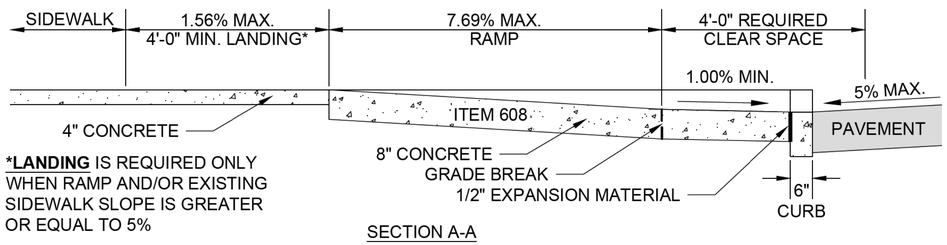

***LANDING** IS REQUIRED ONLY WHEN RAMP AND/OR EXISTING SIDEWALK SLOPE IS GREATER OR EQUAL TO 5%

SECTION A-A

1 DETAIL TO BE USED WHEN DISTANCE FROM BACK OF CURB TO THE GRADE BREAK IS GREATER THAN 5 FT.

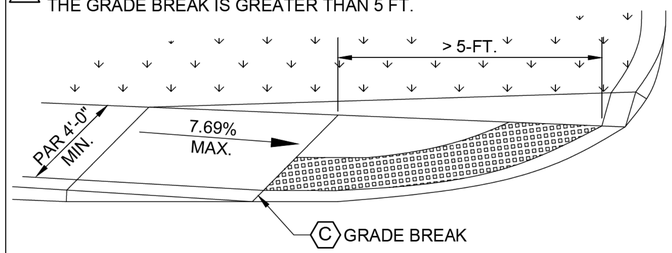

CODED NOTES:

A SEE SHEET 21 FOR DETECTABLE WARNING DETAILS

B PROVIDE POSITIVE DRAINAGE ALONG CURBLINE, SHOULD BE 1.00% MINIMUM SLOPE

C WHERE THE DISTANCE FROM EITHER END OF THE BOTTOM OF THE GRADE BREAK TO THE BACK OF CURB IS GREATER THAN 5-FT, THE DETECTABLE WARNING SHALL BE PLACED AT THE BACK OF CURB

GENERAL NOTES:

1. SEE SHEET 2 FOR ADDITIONAL DETAILED INFORMATION.
2. THE EDGE OF THE CURB WITHIN THE CLEAR SPACE SHALL BE FLUSH WITH THE EDGE OF THE ADJACENT PAVEMENT AND GUTTER.

CURB RAMP TYPE G

CITY OF COLUMBUS, OHIO
DEPARTMENT OF PUBLIC SERVICE
DIVISION OF DESIGN AND CONSTRUCTION

STD DWG 2319
3/30/2018
SHT 7 OF 21

SEE NOTE 1 ON SHEET 1 OF 21

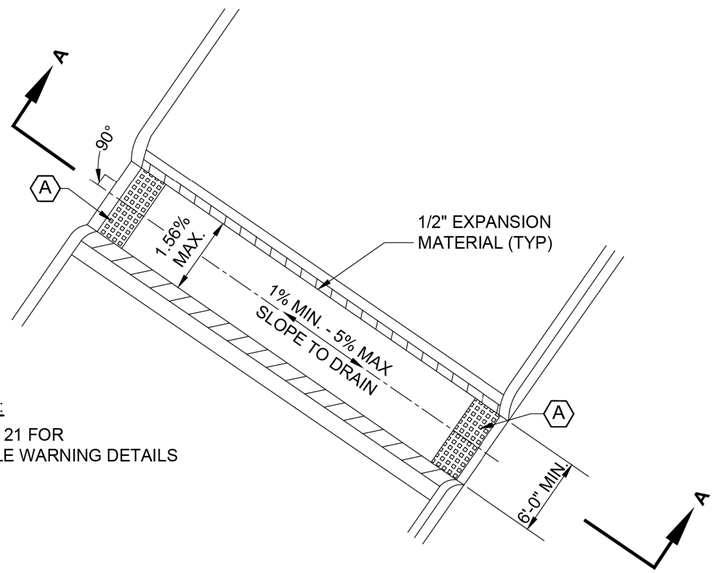

CODED NOTES:

A SEE SHEET 21 FOR DETECTABLE WARNING DETAILS

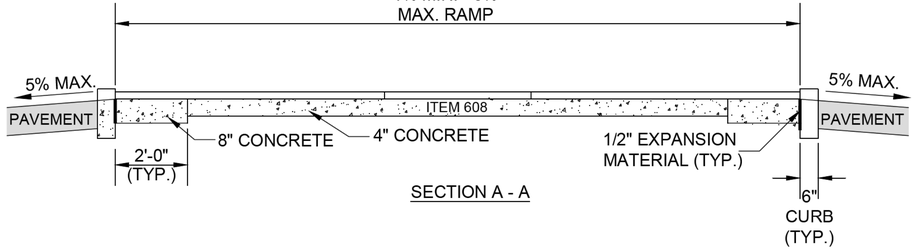

SECTION A - A

GENERAL NOTES:

1. SEE SHEET 2 FOR ADDITIONAL DETAILED INFORMATION.
2. RAMP L-1 SHALL BE USED IN ALL CIRCUMSTANCES WHERE NOT PROHIBITED BY DRAINAGE ISSUES. AN L-1 RAMP SHOULD NOT BE PLACED IN A WAY THAT WOULD CONVEY THE CURB FLOW OF WATER THROUGH THE MEDIAN PASSTHROUGH. WHERE THE ROADWAY CROSS-SLOPE DIRECTS WATER TOWARDS THE MEDIAN AND FLOWS THROUGH THE GUTTER LINE ADJACENT TO THE PASSTHROUGH, USE AN L-2 RAMP.
3. MEDIANS / ISLANDS WITHIN COMMERCIAL DRIVES REQUIRE DETECTABLE WARNINGS ONLY WHEN OPPOSING CURB RAMPS REQUIRE DETECTABLE WARNINGS. (SEE SHEET 21 OF 21, NOTE 1)

CURB RAMP TYPE L-1

CITY OF COLUMBUS, OHIO
DEPARTMENT OF PUBLIC SERVICE
DIVISION OF DESIGN AND CONSTRUCTION

STD DWG 2319
3/30/2018
SHT 10 OF 21

SEE NOTE 1 ON SHEET 1 OF 21

CALCULATED | CHECKED

MISC. DETAILS - CONCRETE WALK, CURB RAMP DETAILS

FRA-70-14.54

1197
2317

PLOT.CEL
ms consultants, inc.
msconsultants.com
www.msconsultants.com
Ohio DOT Workspace
70\71 East Interchange 2E
Batchplot Spec: \\msconsultants.com\files\production\03\60\06634_2E\standards\plotdrv\batchplt.spc PCF: ohdot1V8i
Pen Table: \\msconsultants.com\files\Standards\usin\ohdot\V8i\ms\plotting\pen\V8i_ms_std.tbl PCF: 60-06634_2E_Columbus
Plot Driver: \\msconsultants.com\files\Standards\usin\ohdot\v8i\ms\plotting\PDF.pltcfg
Model: Sheet View: FENCE_VIEW1
Printed: 7/31/2018 @ 12:04:33 PM By: jbouglas
File: N:\03\60\06634_2E\roadway\sheets\105220M011.dgn
34" x 22"

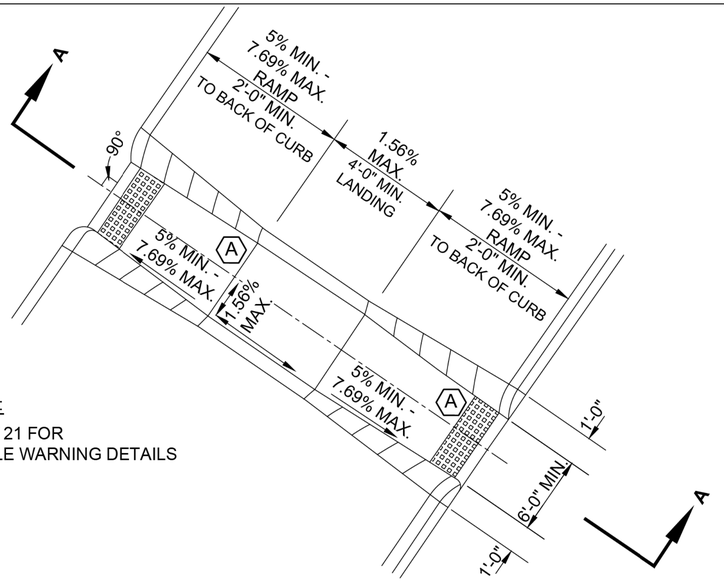

CODED NOTES:

(A) SEE SHEET 21 FOR DETECTABLE WARNING DETAILS

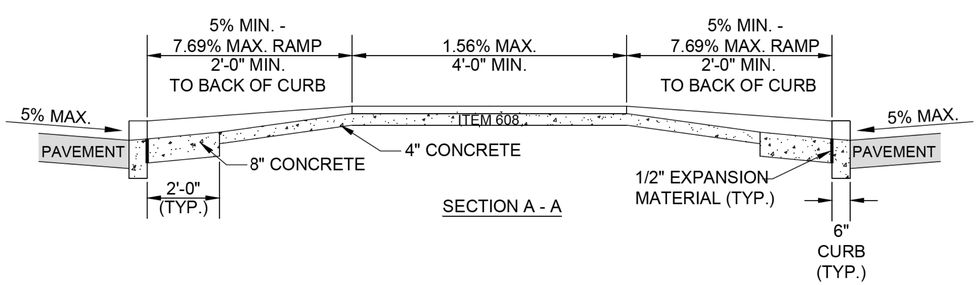

SECTION A - A

GENERAL NOTES:

1. SEE SHEET 2 FOR ADDITIONAL DETAILED INFORMATION.
2. MEDIANS / ISLANDS WITHIN COMMERCIAL DRIVES REQUIRE DETECTABLE WARNINGS ONLY WHEN OPPOSING CURB RAMPS REQUIRE DETECTABLE WARNINGS. (SEE SHEET 21 OF 21, NOTE 1).
3. TYPE L-2 RAMPS ARE ONLY TO BE INSTALLED WHEN IT IS NOT POSSIBLE TO INSTALL A TYPE L-1 RAMP DUE TO DRAINAGE ISSUES.
4. TYPE L-2 RAMPS CAN ONLY BE USED ON MEDIANS 8 FEET WIDE OR MORE.

CURB RAMP TYPE L-2

CITY OF COLUMBUS, OHIO
DEPARTMENT OF PUBLIC SERVICE
DIVISION OF DESIGN AND CONSTRUCTION

STD DWG 2319
3/30/2018
SHT 11 OF 21

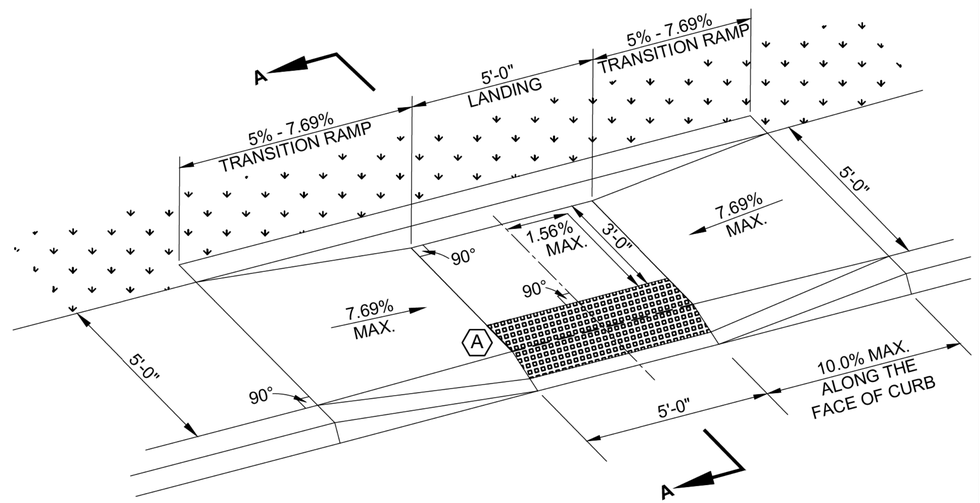

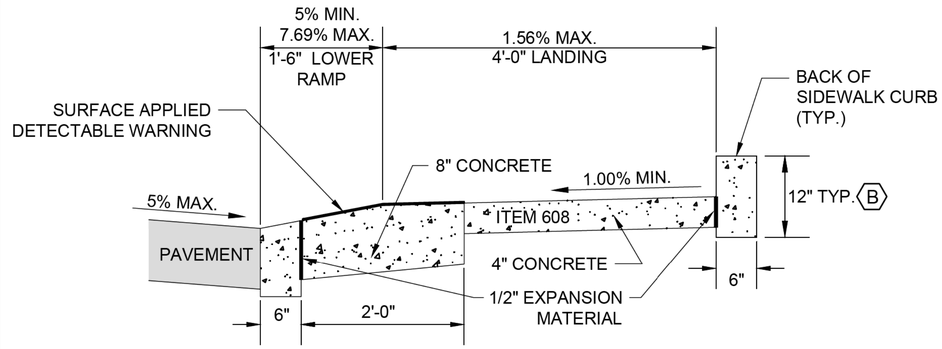

SECTION A-A

CODED NOTES:

(A) SEE SHEET 21 FOR DETECTABLE WARNING DETAILS

(B) EXPOSED REVEAL MUST EQUAL BURIED DEPTH; 12" MAXIMUM REVEAL; FOR ADDITIONAL DETAILS SEE CURB WALL SPECIFICATION

GENERAL NOTES:

1. SEE SHEET 2 FOR ADDITIONAL DETAILED INFORMATION.

CURB RAMP TYPE P-5

CITY OF COLUMBUS, OHIO
DEPARTMENT OF PUBLIC SERVICE
DIVISION OF DESIGN AND CONSTRUCTION

STD DWG 2319
3/30/2018
SHT 13 OF 21

SEE NOTE 1 ON SHEET 1 OF 21

CALCULATED | CHECKED

MISC. DETAILS - CURB / CURB RAMP / ENCASEMENT DETAILS

FRA-70-14.54

1198
2317

ms consultants, inc.

PLOT.CEL
ms consultants, inc.
msconsultants.com
www.msconsultants.com
Ohio DOT Workspace
70\71 East Interchange 2E
Batchplot Spec: \\msconsultants.com\files\production\03\60\06634_2E\standards\plotdrv\batchplt.SPC
Pen Table: \\msconsultants.com\files\Standards\astm\ohdot\V8i\ms\plotting\pen\V8i_ms_std.TBL
Plot Driver: \\msconsultants.com\files\Standards\astm\ohdot\v8i\ms\plotting\PDF.pltcfg
PDF: ohdotV8i
PDF: 60-06634_2E_Columbus
Model: Sheet
Printed: 7/31/2018 @ 12:04:48 PM
File: N:\03\60\06634_2E\roadway\sheets\105220M012.dgn
View: SHEET
By: jdouglas
34" x 22"

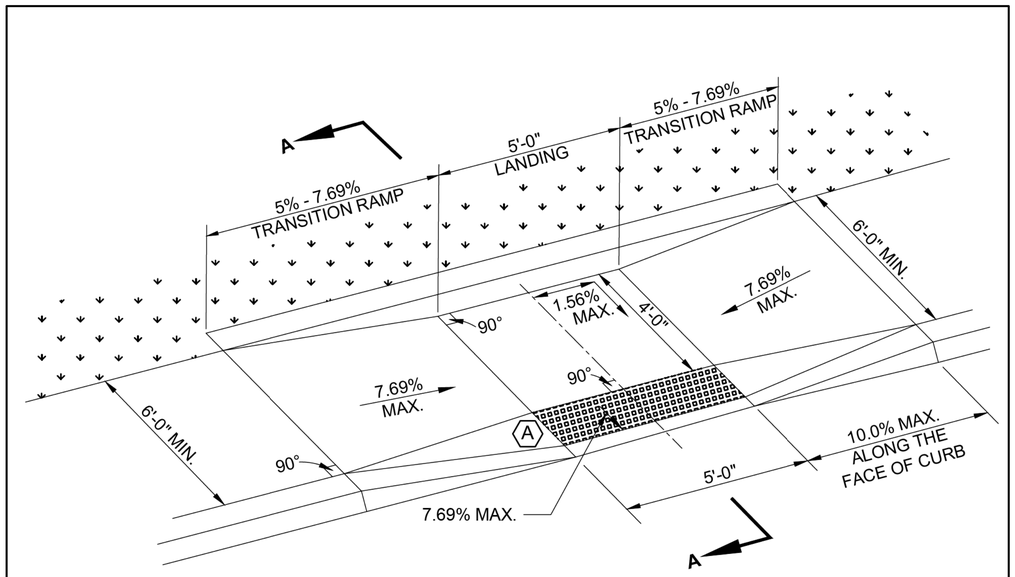

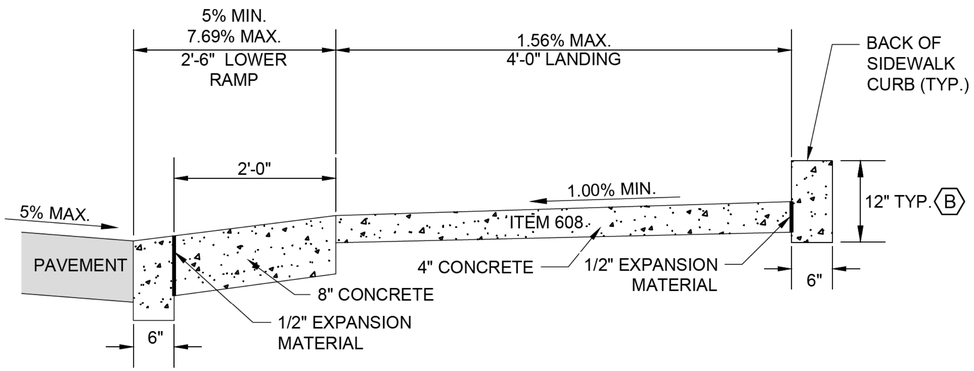

SECTION A-A

CODED NOTES:

A SEE SHEET 21 FOR DETECTABLE WARNING DETAILS

B EXPOSED REVEAL MUST EQUAL BURIED DEPTH; 12" MAXIMUM REVEAL; FOR ADDITIONAL DETAILS SEE CURB WALL SPECIFICATION

GENERAL NOTES:

1. SEE SHEET 2 FOR ADDITIONAL DETAILED INFORMATION.

CURB RAMP TYPE P-6

CITY OF COLUMBUS, OHIO
DEPARTMENT OF PUBLIC SERVICE
DIVISION OF DESIGN AND CONSTRUCTION

STD DWG 2319
3/30/2018
SHT 14 OF 21

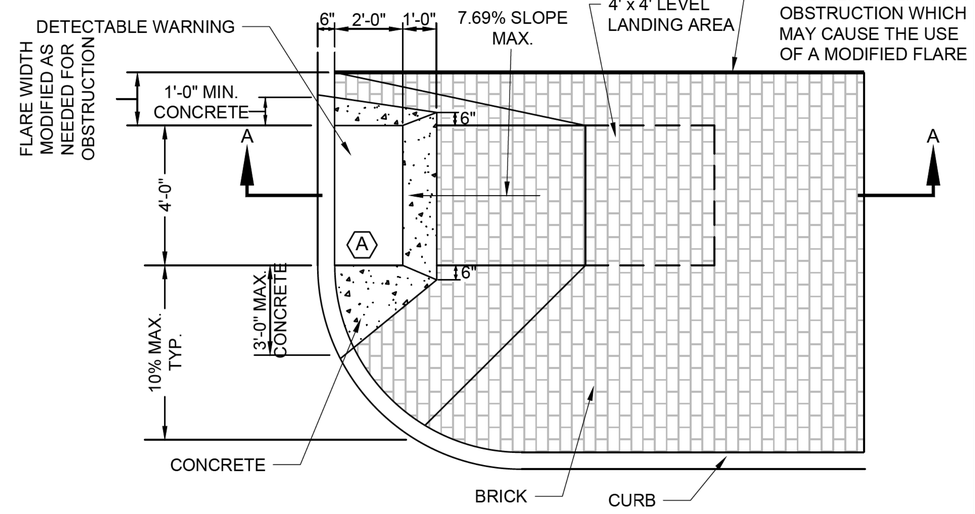

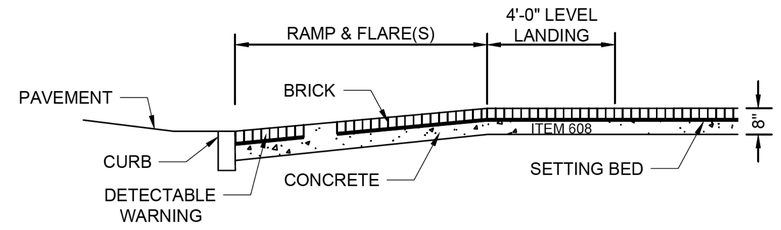

SECTION A-A

1. WRITTEN APPROVAL FROM THE CITY ENGINEER OR AN AUTHORIZED REPRESENTATIVE SHALL BE OBTAINED PRIOR TO THE DESIGN OR CONSTRUCTION OF GRANITE OR AN ALTERNATE MATERIAL CURB RAMP.
2. ALONG WITH THE REQUIREMENT OF THIS SHEET FOR BRICK OR GRANITE CURB RAMPS, ALL OTHER APPLICABLE REQUIREMENTS OF 2319 SHALL BE FOLLOWED.
3. BRICK OR GRANITE CURB RAMPS SHALL BE TYPED PER 2319. TYPICALLY TYPE A OR TYPE D WILL BE USED. ALL APPLICABLE DIMENSIONS AND REQUIREMENTS FOR THE SELECTED TYPE OF RAMP SHALL BE FOLLOWED.
4. LONG FLARES WILL BE USED WHEREVER POSSIBLE. A MODIFIED FLARE SHALL BE USED WHEN AN OBSTRUCTION EXISTS.
5. THE INSTALLATION OF THE BRICK OR GRANITE PAVERS SHALL BE DONE PER STD DWG 2301, BRICK SIDEWALK.

CODED NOTES:

A SEE SHEET 21 FOR DETECTABLE WARNING DETAILS

PERPENDICULAR CURB RAMP BRICK SIDEWALK

CITY OF COLUMBUS, OHIO
DEPARTMENT OF PUBLIC SERVICE
DIVISION OF DESIGN AND CONSTRUCTION

STD DWG 2319
3/30/2018
SHT 19 OF 21

SEE NOTE 1 ON SHEET 1 OF 21

CALCULATED | CHECKED

MISC. DETAILS - CONCRETE WALK, CURB RAMP DETAILS

FRA-70-14.54

1199
2317

PLOT.CEL

ms consultants, inc.
msconsultants.com

www.msconsultants.com

Ohio DOT Workspace
70\71 East Interchange 2E

Batchplot Spec: \\msconsultants.com\Files\production\03\60\06634_2E\standards\plotdrv\batchplt.SPC
Pen Table: \\msconsultants.com\Files\Standards\astm\ohdot\V8i\ms\plotting\pen\V8i_ms_std.TBL PDF: ohdotV8i
Plot Driver: \\msconsultants.com\Files\Standards\astm\ohdot\v8i\ms\plotting\PDF.pltcfg PDF: 60-06634_2E_Columbus

Model: Sheet
Printed: 7/31/2018 @ 12:05:02 PM View: SHEET
File: N:\03\60\06634_2E\roadway\sheets\05322GM013.dgn By: jdouglas

34" x 22"

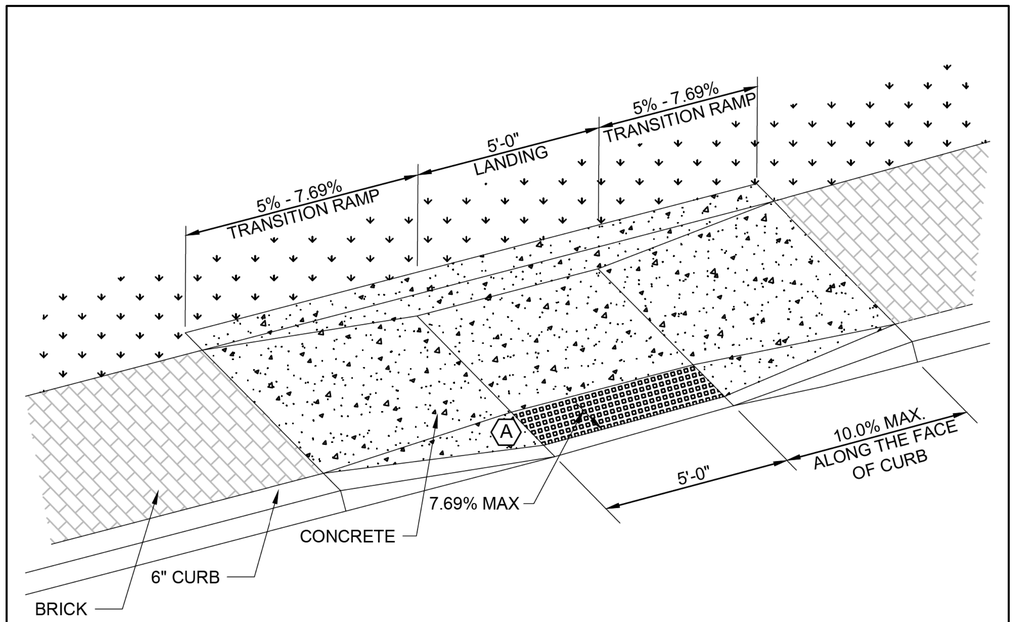

1. WRITTEN APPROVAL FROM THE CITY ENGINEER OR AN AUTHORIZED REPRESENTATIVE SHALL BE OBTAINED PRIOR TO THE DESIGN OR CONSTRUCTION OF GRANITE OR AN ALTERNATE MATERIAL CURB RAMP.
2. ALONG WITH THE REQUIREMENT OF THIS SHEET FOR BRICK OR GRANITE CURB RAMPS, ALL OTHER APPLICABLE REQUIREMENTS OF 2319 SHALL BE FOLLOWED.
3. BRICK OR GRANITE CURB RAMPS SHALL BE TYPED PER 2319. TYPICALLY TYPE A OR TYPE D WILL BE USED. ALL APPLICABLE DIMENSIONS AND REQUIREMENTS FOR THE SELECTED TYPE OF RAMP SHALL BE FOLLOWED.
4. LONG FLARES WILL BE USED WHEREVER POSSIBLE. A MODIFIED FLARE SHALL BE USED WHEN AN OBSTRUCTION EXISTS.
5. THE INSTALLATION OF THE BRICK OR GRANITE PAVERS SHALL BE DONE PER STD DWG 2301, BRICK SIDEWALK.

CODED NOTES:

(A) SEE SHEET 21 FOR DETECTABLE WARNING DETAILS

PARALLEL CURB RAMP BRICK SIDEWALK

CITY OF COLUMBUS, OHIO
DEPARTMENT OF PUBLIC SERVICE
DIVISION OF DESIGN AND CONSTRUCTION

STD DWG 2319
3/30/2018
SHT 20 OF 21

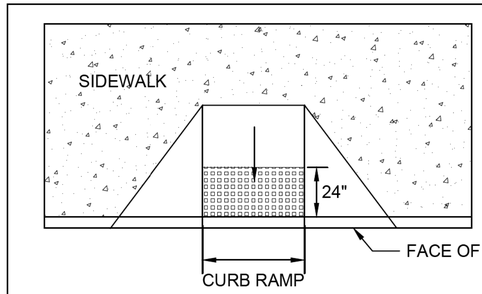

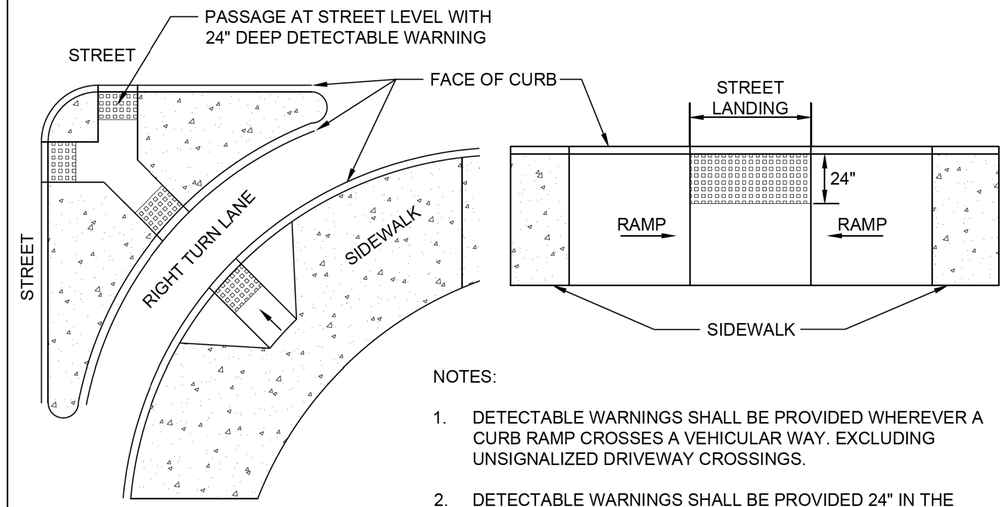

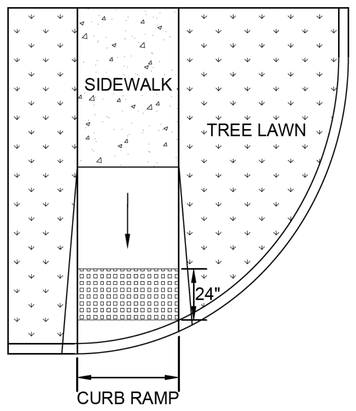

NOTES:

1. DETECTABLE WARNINGS SHALL BE PROVIDED WHEREVER A CURB RAMP CROSSES A VEHICULAR WAY. EXCLUDING UNSIGNALIZED DRIVEWAY CROSSINGS.
2. DETECTABLE WARNINGS SHALL BE PROVIDED 24" IN THE DIRECTION OF TRAVEL AND EXTEND THE FULL WIDTH OF THE CURB RAMP OR FLUSH SURFACE. THE DETECTABLE WARNING SHALL BE LOCATED ADJACENT TO THE CURB LINE.
3. MATERIALS SHALL COMPLY WITH CMSC 608 AND DPS ADA RULES AND REGULATIONS.
4. DETECTABLE WARNINGS SHALL BE PLACED 6" TO 8" BEHIND THE FACE OF CURB AND BEHIND THE CURB JOINT.
5. CAST IN PLACE OR ANY NON-SURFACE APPLIED DETECTABLE WARNING SHALL HAVE A MINIMUM OF 3" OF CONCRETE ON EACH SIDE OF THE WARNING.

CURB RAMP DETECTABLE WARNINGS

CITY OF COLUMBUS, OHIO
DEPARTMENT OF PUBLIC SERVICE
DIVISION OF DESIGN AND CONSTRUCTION

STD DWG 2319
3/30/2018
SHT 21 OF 21

CALCULATED | CHECKED

MISC. DETAILS - CURB/CURB RAMP/ENCASEMENT DETAILS

FRA-70-14.54

1200
2317

PLOT.CEL
ms consultants, inc.
msconsultants.com
www.msconsultants.com
Ohio DOT Workspace
70\71 East Interchange 2E
1"
0
0.5"
PDF: ohdot\V8i
PDF: 60-06634_2E_Columbus
Batchplot Spec: \\msconsultants.com\files\production\03\60\06634_2E\standards\plotdir\batchplt.spc
Pen Table: \\msconsultants.com\files\Standards\ustn\ohdot\V8\ms\plotting\pen\V8i_ms_std.tbl
Plot Driver: \\msconsultants.com\files\Standards\ustn\ohdot\v8\ms\plotting\PDF.pltcfg
Model: Sheet
Printed: 8/1/2018 @ 2:08:32 PM
File: N:\03\60\06634_2E\roadway\sheets\0532608014.dgn
View: FENCE_VIEW1
By: jdouglas
34" x 22"

ITEM 608 - DETECTABLE WARNING, AS PER PLAN

1551.01 DESCRIPTION
THIS WORK SHALL CONSIST OF FURNISHING ALL MATERIAL, EQUIPMENT, AND LABOR NECESSARY FOR THE PLACEMENT OF DETECTABLE WARNING DEVICES AT CURB RAMPS OR OTHER WALKING SURFACES, COMPLETE AND READY FORSERVICE AT LOCATIONS SHOWN ON THE PLANS. ALL WORK SHALL BE IN ACCORDANCE WITH CITY OF COLUMBUS STANDARD DRAWING 2319 LOCATED ON SHEET 1195 AND WITH SECTION 1108 OF THE ARCHITECTURAL AND TRANSPORTATION BARRIERS COMPLIANCE BOARD'S "DRAFT GUIDELINES FOR ACCESSIBLE PUBLIC RIGHTS-OF-WAY", DATED JUNE 17, 2002 AS AMENDED, SUPPLEMENTED AND ADOPTED.

1551.02 MATERIALS
DETECTABLE WARNING SURFACES SHALL BE TEXTURED TO PROVIDE SLIP RESISTANCE AND SHALL CONTRAST VISUALLY WITH ADJACENT WALKING SURFACES - EITHER LIGHT-ON-DARK, OR DARK-ON-LIGHT. THE PREFERRED COLOR FOR A LIGHT BACKGROUND SHALL BE BRICK RED. THE PREFERRED COLOR FOR A DARK BACKGROUND SHALL BE SAFETY YELLOW OR LIGHT GRANITE. OTHER COLORS MAY BE SPECIFIED OR APPROVED BY ODOT PROVIDED THAT SAMPLES ARE SUBMITTED TO AND APPROVED BY ODOT'S PROJECT MANAGER AT LEAST THREE (3) WORKING DAYS PRIOR TO INSTALLATION. COLOR SUBMITTALS SHALL INCLUDE MANUFACTURER'S STATEMENT OF PERCENTAGE OF VISUAL CONTRAST PROVIDED ACCORDING TO ADAAG A4.29.2. COLOR SHALL BE INTEGRAL WITH THE DETECTABLE WARNING DEVICE AND SHALL NOT BE SURFACE APPLIED. PAINTS OR OTHER SURFACE COATINGS SHALL NOT BE USED. DETECTABLE WARNING SURFACE APPLICATION METHOD TO USE IS AS FOLLOWS:

PRE-MANUFACTURED, WET-SET PRODUCTS - GENERALLY INCLUDES RIGID PRODUCTS PRESSED INTO FRESHLY FORMED CONCRETE - APPROVED FOR NEW CONSTRUCTION, ONLY.

1551.03 DIMENSIONS
TRUNCATED DOMES IN A DETECTABLE WARNING SURFACE SHALL HAVE A BASE DIAMETER OF 0.9 INCHES (23 MM) MINIMUM TO 1.4 INCHES (36 MM) MAXIMUM, A TOP DIAMETER OF 50% OF THE BASE DIAMETER MINIMUM TO 65% OF THE BASE DIAMETER MAXIMUM, AND A HEIGHT OF 0.2 INCHES (5 MM).

TRUNCATED DOMES IN A DETECTABLE WARNING SURFACE SHALL HAVE A CENTER-TO-CENTER SPACING OF 1.6 INCHES (41 MM) MINIMUM AND 2.4 INCHES (61 MM) MAXIMUM, AND A BASE-TO-BASE SPACING OF 0.65 INCHES (16 MM) MINIMUM, MEASURED BETWEEN THE MOST ADJACENT DOMES ON A SQUARE GRID.

DETECTABLE WARNING SURFACES SHALL EXTEND 24 INCHES (610 MM) MINIMUM IN THE DIRECTION OF TRAVEL AND THE FULL WIDTH OF THE CURB RAMP, LANDING, OR BLENDED TRANSITION.

PAVERS SHALL BE LAID SO THAT THE CENTERS OF DOMES ALIGN WITH A STRAIGHT EDGE PLACED BOTH PERPENDICULAR AND PARALLEL WITH THE DIRECTION OF TRAVEL. DOME ALIGNMENT MAY NOT DIFFER BY MORE THAN 1/4-INCH.

THE DETECTABLE WARNING SURFACE SHALL BE LOCATED SO THAT THE EDGE NEAREST THE CURB LINE IS 6 INCHES (150 MM) MINIMUM AND 8 INCHES (205 MM) MAXIMUM FROM THE FACE OF THE CURB LINE.

DOMES SHALL BE ALIGNED ON A SQUARE GRID, ALIGNED IN ROWS PARALLEL AND PERPENDICULAR TO THE PREDOMINANT DIRECTION OF TRAVEL. DOMES MUST BE NOT BE SKEWED DIAGONALLY TO THE DIRECTION OF TRAVEL.

1551.04 APPLICATION
DETECTABLE WARNING DEVICES SHALL BE INSTALLED IN ACCORDANCE WITH MANUFACTURER'S SPECIFICATIONS, EXCEPT AS MODIFIED BY THIS SPECIFICATION OR AS OTHERWISE SPECIFIED ON THE PLANS. THE FINISHED SURFACE SHALL BE UNIFORMLY PROFILED TO MATCH THE ADJOINING SURFACES WITHOUT LIPS, OBSTRUCTIONS AND SHALL DRAIN COMPLETELY.

THE CONTRACTOR SHALL WARRANT THE INSTALLED SURFACE TO LAST NO LESS THAN FIVE YEARS WITHOUT LOSING MORE THAN TWO PERCENT OF THE TRUNCATED DOMES DUE TO DELAMINATING AS A RESULT OF PRODUCT FAILURE, AND SHALL FURTHER WARRANT THE SURFACE FOR A MINIMUM OF FIVE YEARS AGAINST FADING, CHIPPING, PEELING, CRACKING, OR LOSS OF ORIGINAL SHADE DUE TO SUNLIGHT, SALT OR EXPOSURE TO WEATHERING.

1551.05 METHOD OF MEASUREMENT
THE NUMBER OF DETECTABLE WARNING DEVICES SHALL BE THE ACTUAL NUMBER OF INDIVIDUAL SURFACES FURNISHED AND IN PLACE, COMPLETE AND ACCEPTED. THIS ITEM SHALL BE COMPLETE AND INCLUDE ALL WORK NECESSARY TO PROVIDE A COMPLETE AND USEABLE DETECTABLE WARNING DEVICE. THIS SHALL INCLUDE BUT NOT BE LIMITED TO: LAYOUT, SAW-CUTTING, REMOVALS, CONCRETE AND CEMENT BASE MATERIALS, BEDDING, SURFACE PREPARATION, SURFACE SEALANT, AND REPAIR OF ADJOINING AREAS DISTURBED BY THE INSTALLATION OF THE DETECTABLE WARNING SURFACE.

1551.06 BASIS OF PAYMENT
UNLESS SPECIFICALLY INCLUDED UNDER OTHER ITEMS ON THE PLANS, PAYMENT FOR ACCEPTED QUANTITIES WILL BE MADE AT THE CONTRACT UNIT PRICE FOR:

ITEM	UNIT	DESCRIPTION
608	S.F.	DETECTABLE WARNING, AS PER PLAN

NOTE:
PAYMENT FOR ITEM 608 SHALL INCLUDE ALL COSTS OF FURNISHING MATERIAL, EQUIPMENT, AND LABOR NECESSARY FOR THE PLACEMENT OF DETECTABLE WARNING DEVICES, AND SHALL BE IN ADDITION TO ANY OVERLAPPING PAYMENTS FOR SQUARE FOOT OF SIDEWALK, AND THE "PER-EACH" PAYMENT FOR FORMING AND FINISHING THE CURB RAMP.

CALCULATED | CHECKED

MISC. DETAILS

FRA-70-14.54

1201
2317

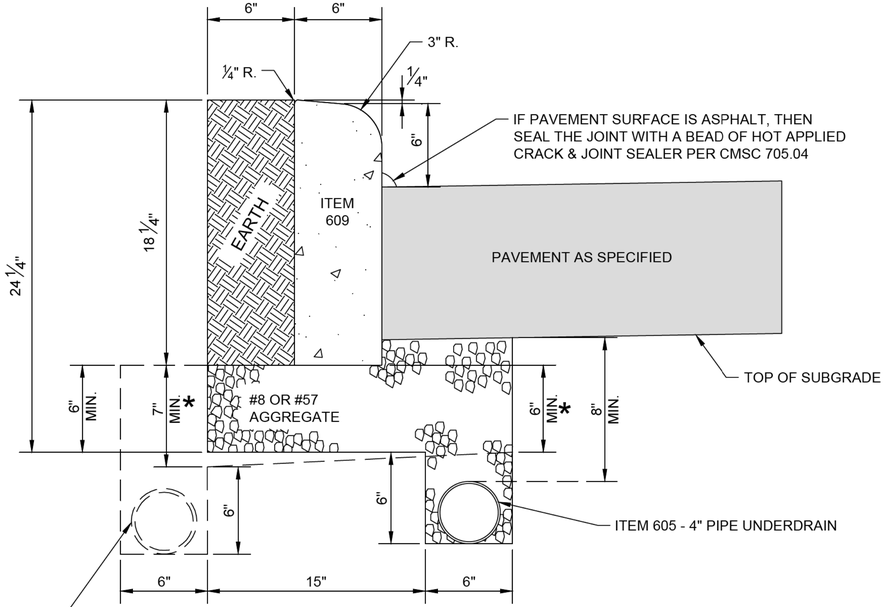

* CURB AGGREGATE COURSE-WHERE THE ROADWAY PAVEMENT HAS AGGREGATE BASE, MATCH THE BOTTOM OF THE CURB AGGREGATE COURSE TO THE TOP OF SUBGRADE. ENSURE ROADWAY SUB BASE MEETS UNDERDRAIN AGGREGATE.

IF THE TOP OF THE SUBGRADE IS BELOW THE BOTTOM OF THE CURB, THE UNDERDRAIN SHALL BE ADJUSTED TO KEEP THE TOP OF THE UNDERDRAIN AT LEAST 8" BELOW THE TOP OF THE SUBGRADE; AGGREGATE DEPTH BETWEEN BOTTOM OF CURB AND TOP OF UNDERDRAIN MAY VARY IF THIS OCCURS.

SUBGRADE COMPACTION SHALL BE COMPLETED BEFORE UNDERDRAIN INSTALLATION.

WHEN A CURB AND GUTTER INLET IS INSTALLED, THE TOP OF THE CASTING SHALL BE THE SAME AS THE TOP OF CURB ELEVATION. THE EDGE OF PAVEMENT ELEVATION SHALL BE 3/8" HIGHER THAN THE GRATE WHEREVER THEY MEET.

FOR REPLACEMENT WORK, THE CURB SHALL BE REMOVED AT AN EXISTING JOINT OR NO CLOSER THAN 5 FEET FROM AN EXISTING JOINT.

1/2" EXPANSION MATERIAL WILL BE INSTALLED BEHIND THE CURB WHEN A CONCRETE WALK, DRIVE, OR OTHER CONCRETE ITEM IS ADJOINING IT.

UNDERDRAIN IS NOT REQUIRED WHEN CURB IS ALONG CONCRETE MEDIAN.

0.74 C.F. CONCRETE PER L.F.

CURB, STRAIGHT 18"

CITY OF COLUMBUS, OHIO DEPARTMENT OF PUBLIC SERVICE DIVISION OF DESIGN AND CONSTRUCTION	STD DWG 2000
CITY ENGINEER	3/30/2018
	SHT 1 OF 1

CALCULATED
CHECKED

MISC. DETAILS - CONCRETE WALK, CURB DETAILS

FRA-70-14.54

1202
2317

PLOT.CEL
ms consultants, inc.
msconsultants.com
Ohio DOT Workspace
70\71 East Interchange 2E
www.msconsultants.com
Batchplot Spec: \\msconsultants.com\files\production\03\60\06634_2E\standards\plotdrv\batchplt.spc
Pen Table: \\msconsultants.com\files\Standards\ustn\ohdot\V8i\ms\plotting\pen\V8i_ms_std.tbl
Plot Driver: \\msconsultants.com\files\Standards\ustn\ohdot\v8i\ms\plotting\PDF.pltcfg
34" x 22"
Model: Sheet
Printed: 8/1/2018 @ 2:08:35 PM
File: N:\03\60\06634_2E\roadway\sheets\105322GM015.dgn
View: FENCE_VIEW1
By: jdouglas

PLOT.CEL
ms consultants, inc.
msconsultants.com
www.msconsultants.com
Ohio DOT Workspace
70\71 East Interchange 2E
0 0.5" 1"
Batchplot Spec: \\msconsultants.com\Files\Production\03\60\06634_2E\standards\plotdrv\batchplt.spc
Pen Table: \\msconsultants.com\Files\Standards\ustn\ohdot\V8i\ms\plotting\pen\V8i_ms_std.tbl
Plot Driver: \\msconsultants.com\Files\Standards\ustn\ohdot\v8i\ms\plotting\PDF.pltcfg
PLOT: ohdotV8i
PLOT: 60-06634_2E_Columbus
34" x 22"
View: FENCE_VIEW1
By: jdouglas
Model: Sheet
Printed: 8/1/2018 @ 2:08:44 PM
File: N:\03\60\06634_2E\roadway\sheets\105220M016.dgn

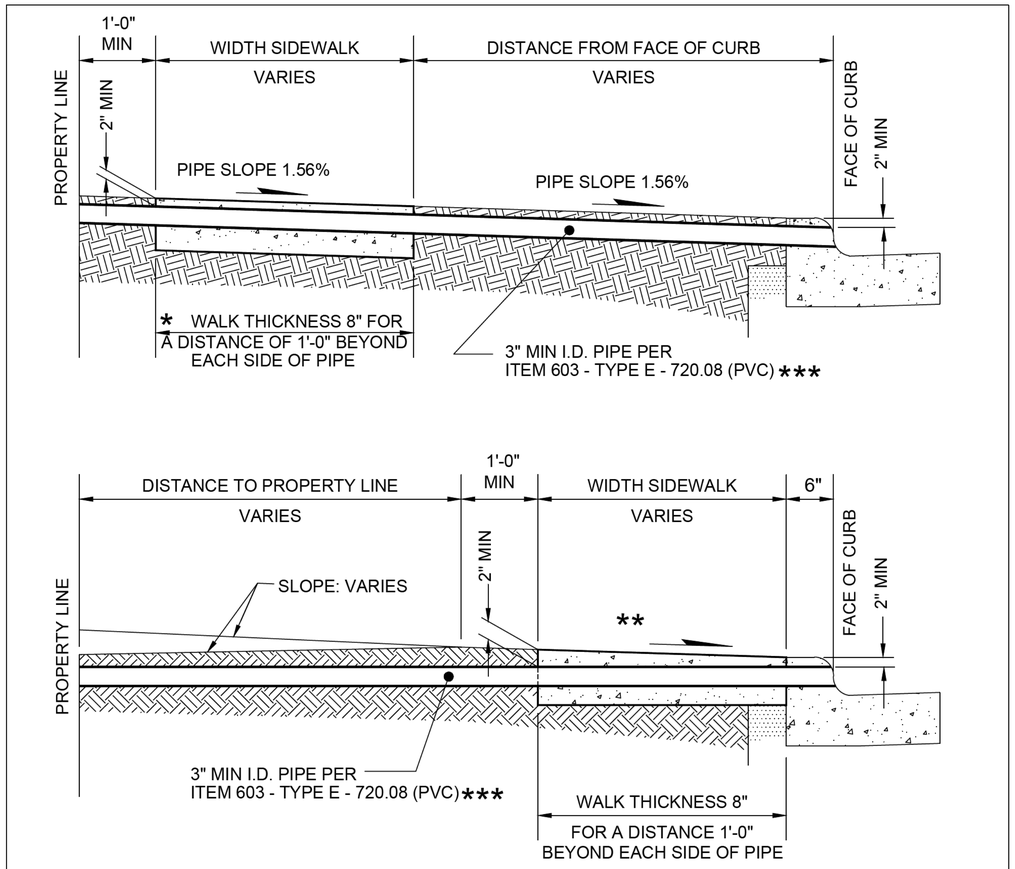

* APPLICABLE ONLY WHERE THICKNESS OF CONCRETE OVER PIPE IS LESS THAN 4".

** SLOPE 1.56% ON SIDEWALK AREA.

*** IF THERE IS EXISTING ROOF DRAIN PIPE, THEN MATCH EXISTING SIZE. IF EXISTING ROOF DRAIN IS LARGER THAN 3", RUN SMALLER PARALLEL PIPES TO MAINTAIN 3" PIPE AT FACE OF CURB.

MOUNTABLE CURB SHALL BE CORE DRILLED ONLY FOR ROOF DRAIN OPENING.

PIPE ROOF DRAIN

CITY OF COLUMBUS, OHIO
DEPARTMENT OF PUBLIC SERVICE
DIVISION OF DESIGN AND CONSTRUCTION

CITY ENGINEER

STD DWG 2320

4/30/2018

SHT 1 OF 1

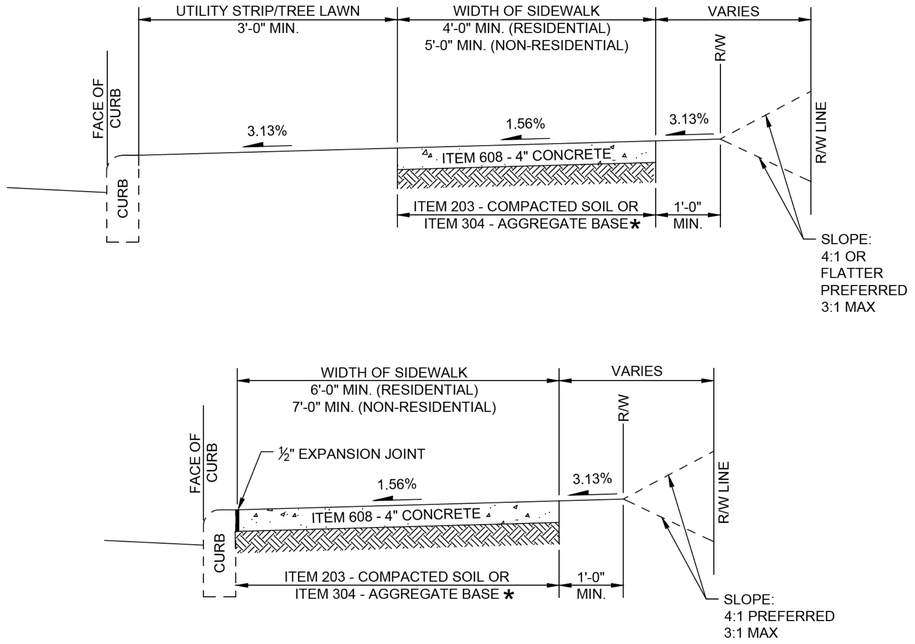

WHERE SIDEWALKS ABUT DRIVEWAYS OR ALLEY APPROACHES, THE CONCRETE THICKNESS OF THE WALK SHALL EQUAL THE THICKNESS OF THE APPROACH (6" MINIMUM) FOR A DISTANCE OF ONE (1) FULL PANEL OR MINIMUM 5 FEET. SEE STANDARD DRAWING OF THE APPLICABLE DRIVEWAY OR ALLEY.

WHERE NEW WALK ABUTS ADJOINING WALK, SAWCUT EXISTING WALK TO NEAREST JOINT AND INSTALL EXPANSION JOINT.

EXPANSION JOINT LOCATION AND SPACING PER ITEM 608.03.

WATER AND UTILITY BOXES IN THE SIDEWALK AREA SHALL BE ADJUSTED FLUSH WITH FINAL SURFACE.

ROOF DRAINS SHALL BE EXTENDED UNDER THE SIDEWALK AND THROUGH THE CURB. SEE STD DWG 2320.

ITEM NUMBERS REFER TO THE CITY OF COLUMBUS CMSC, CURRENT EDITION. ALL WORK SHALL BE DONE IN ACCORDANCE WITH THESE SPECIFICATIONS.

* #57 AGGREGATE MAY BE USED FOR REPLACEMENT WORK.

SIDEWALK

CITY OF COLUMBUS, OHIO
DEPARTMENT OF PUBLIC SERVICE
DIVISION OF DESIGN AND CONSTRUCTION

CITY ENGINEER

STD DWG 2300

04/30/18

SHT 1 OF 1

CALCULATED

CHECKED

MISC. DETAILS - PIPE ROOF DRAIN, SIDEWALK

FRA-70-14.54

1204
2317

34" x 22"
Model: Sheet View: FENCE_VIEW1
Printed: 9/13/2018 @ 2:54:04 PM By: hbrendlinger
File: N:\03\60\06634_2E\roadway\sheets\105322GM017.dgn
Batchplot Spec: \\msconsultants.com\files\production\03\60\06634_2E\standards\plotdrv\batchplt.spc
Pen Table: \\msconsultants.com\files\Standards\ustn\ohdot\V8i\ms\plotting\pen\V8i_ms_std.tbl
Plot Driver: \\msconsultants.com\files\Standards\ustn\ohdot\v8i\ms\plotting\PDF.pltcfg
PCF: ohdotV8i
PCF: 60-06634_2E_Columbus
Ohio DOT Workspace
70\71 East Interchange 2E
ms consultants, inc.
msconsultants.com
PLOT.CEL
www.msconsultants.com

FOR USE ON A PARCEL WITH A SINGLE DWELLING

* CURB OR COMBINED CURB AND GUTTER SHALL BE TAKEN OUT AND REPLACED WITH CONCRETE, SEPARATED FROM THE DRIVE BY 1/2" PREMOLDED EXPANSION JOINT. WHEN LESS THAN 5 FT. OF A CURB SECTION REMAINS AFTER THE CURB CUT IS LOCATED, IT SHALL ALSO BE REMOVED AND REPLACED. CURB SHALL BE CONSTRUCTED IN MINIMUM 5 FT. SECTIONS AND MAXIMUM 10 FT. SECTIONS.

** SIDEWALK WIDTH SHALL BE PER STANDARD DRAWING 2300. SIDEWALK THICKNESS SHALL BE 6" CONCRETE TO ONE FULL PANEL (MIN. 5 FT.) BEYOND EDGE OF DRIVE.

*** 5 FT. ON ROADWAYS WITH 35 MPH SPEED LIMIT, 2 FT. FOR SPEED LIMITS LESS THAN 35 MPH.

PAR = PEDESTRIAN ACCESS ROUTE. SET PAR THROUGH APPROACH AT SIDEWALK GRADE TO AVOID RAMP OR TRANSITION. IF NOT POSSIBLE, THEN MINIMIZE TRANSITION FROM SIDEWALK TO APPROACH.

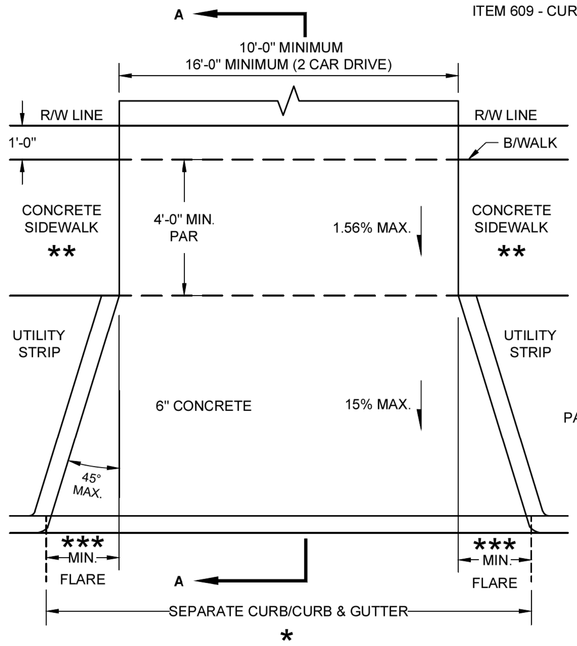

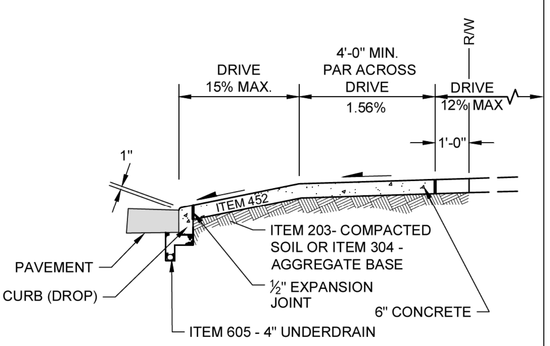

STRAIGHT CURB SECTION SECTION A-A

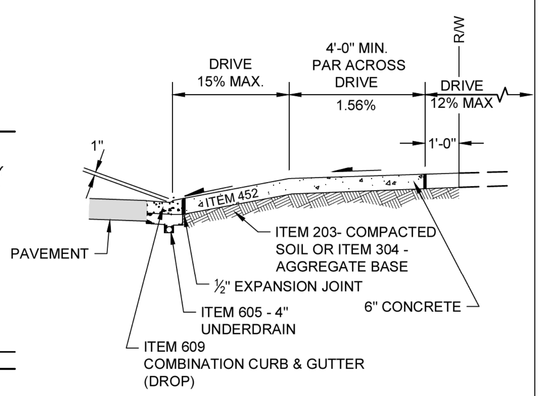

COMBINATION CURB AND GUTTER SECTION SECTION A-A

CITY ENGINEER

CITY OF COLUMBUS, OHIO
DEPARTMENT OF PUBLIC SERVICE
DIVISION OF DESIGN AND CONSTRUCTION

DRIVEWAY, RESIDENTIAL CURBED ROADWAY

STD DWG 2201

04/30/18

SHT 1 OF 4

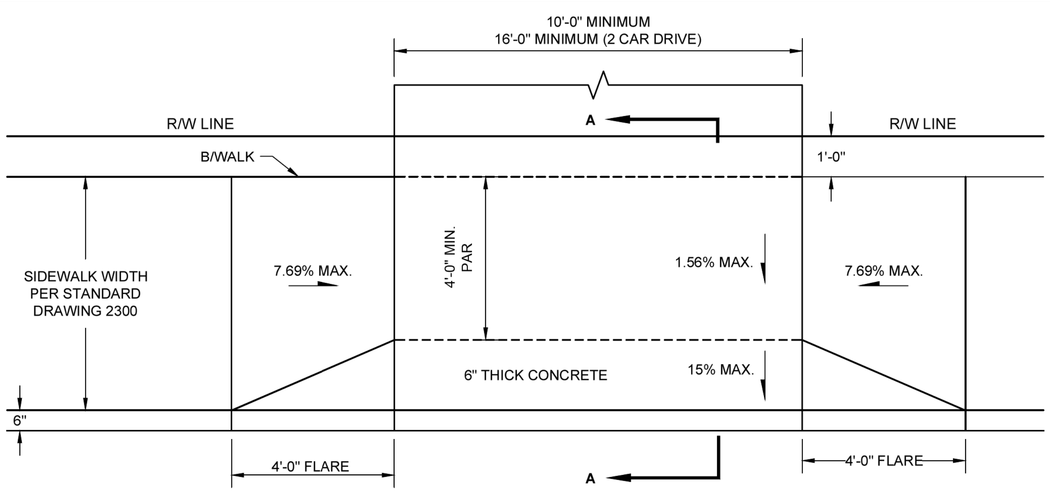

SIDEWALK ADJACENT TO CURB

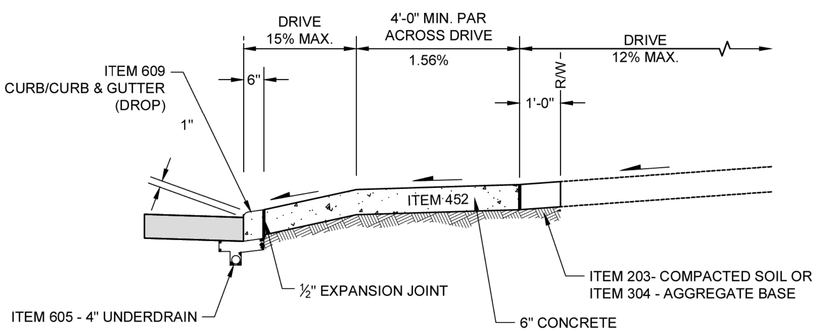

SECTION A-A

SEE SHEET 1 OF 4 FOR NOTES

CITY OF COLUMBUS, OHIO
DEPARTMENT OF PUBLIC SERVICE
DIVISION OF DESIGN AND CONSTRUCTION

DRIVEWAY, RESIDENTIAL CURBED ROADWAY

STD DWG 2201

04/30/18

SHT 2 OF 4

ms consultants, inc.

34" x 22"
Model: Sheet View: FENCE_VIEW1
Printed: 9/13/2018 @ 2:52:30 PM By: hbrendlinger
File: N:\03\60\06634_2E\roadway\sheets\105322GM018.dgn
Batchplot Spec: \\msconsultants.com\files\production\03\60\06634_2E\standards\plotdrv\batchplt.spc
Pen Table: \\msconsultants.com\files\Standards\ustn\ohdot\V8i\ms\plotting\pen\V8i_ms_std.tbl
Plot Driver: \\msconsultants.com\files\Standards\ustn\ohdot\v8i\ms\plotting\PDF.pltcfg
PCF: ohdotV8i
PCF: 60-06634_2E_Columbus
Ohio DOT Workspace
70\71 East Interchange 2E
ms consultants, inc.
msconsultants.com
PLOT.CEL
www.msconsultants.com

* USE WHEN FRONT RAMP OF DRIVE IS LONGER THAN 2 FT. MAINTAIN R/W CLEARANCE FOR WALK.

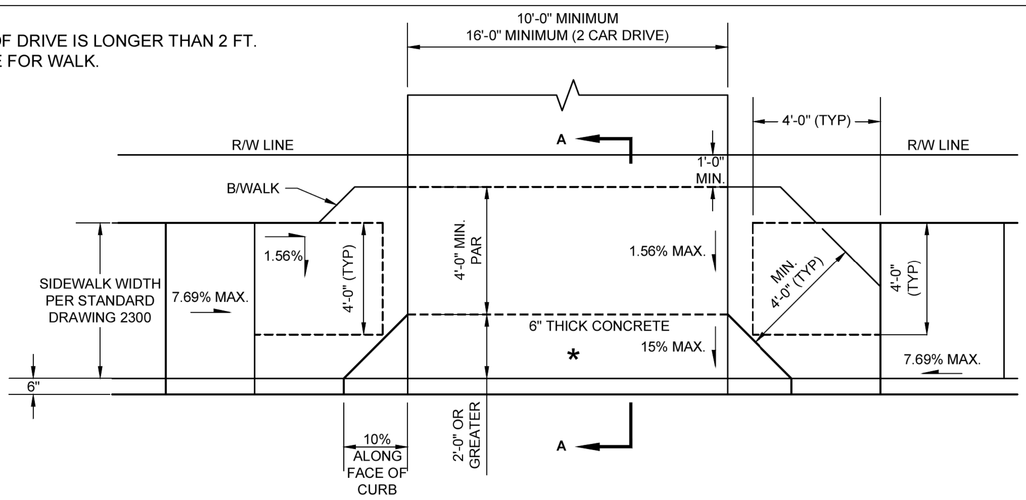

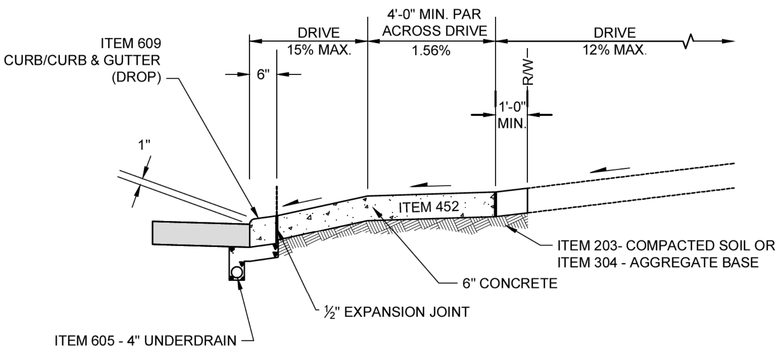

SECTION A-A
SEE SHEET 1 OF 4 FOR NOTES

CITY OF COLUMBUS, OHIO
DEPARTMENT OF PUBLIC SERVICE
DIVISION OF DESIGN AND CONSTRUCTION

DRIVEWAY, RESIDENTIAL
CURBED ROADWAY

SIDEWALK ADJACENT TO CURB WITH RUN-AROUND

STD DWG 2201
04/30/18
SHT 3 OF 4

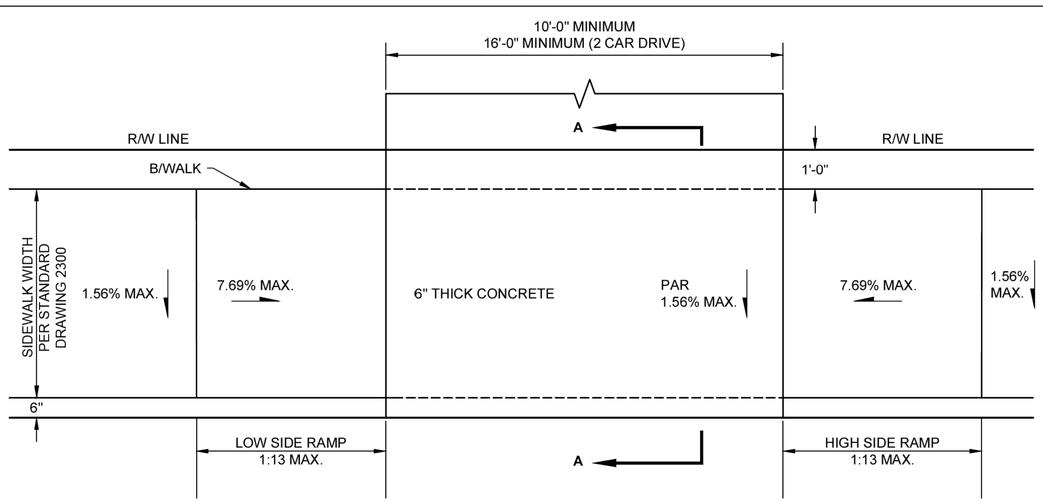

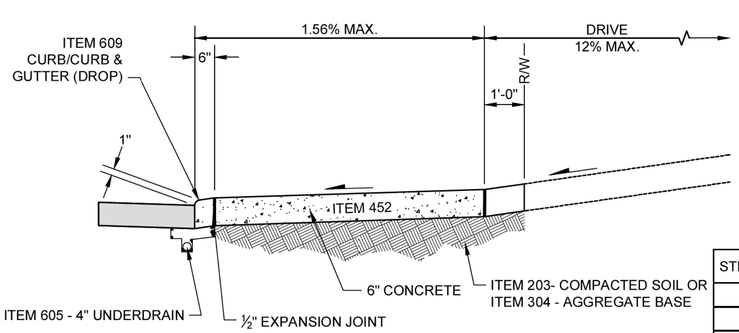

SECTION A-A
SEE SHEET 1 OF 4 FOR NOTES

STREET GRADE	RAMP LENGTH (1:13)	
	LOW SIDE *	HIGH SIDE *
1%	5'-6"	7'-2"
2%	5'-0"	8'-4"
3%	4'-6"	10'-0"
4%	4'-2"	12'-6"
5%	3'-10"	16'-8"

* MEASURED ALONG THE BACK OF CURB

CITY OF COLUMBUS, OHIO
DEPARTMENT OF PUBLIC SERVICE
DIVISION OF DESIGN AND CONSTRUCTION

DRIVEWAY, RESIDENTIAL
CURBED ROADWAY

SIDEWALK ADJACENT TO CURB

STD DWG 2201
04/30/18
SHT 4 OF 4

ms consultants, inc.

PLOT.CEL
ms consultants, inc.
msconsultants.com
www.msconsultants.com
Ohio DOT Workspace
70\71 East Interchange 2E
Batchplot Spec: \\msconsultants.com\files\production\03\60\06634_2E\standards\plotdrv\batchplt.spc
Pen Table: \\msconsultants.com\files\Standards\usth\ohdot\V8i\ms\plotting\pen\V8i_ms_std.tbl
Plot Driver: \\msconsultants.com\files\Standards\usth\ohdot\v8i\ms\plotting\PDF.prtcfg
PDF: ohdotV8i
PLCF: 60-06634_2E_Columbus
1" 0.5" 0
34" x 22"
Model: Sheet
Printed: 8/1/2018 @ 2:08:59 PM
File: N:\03\60\06634_2E\roadway\sheets\05322DM09.dgn
View: FENCE_VIEW1
By: jdougos

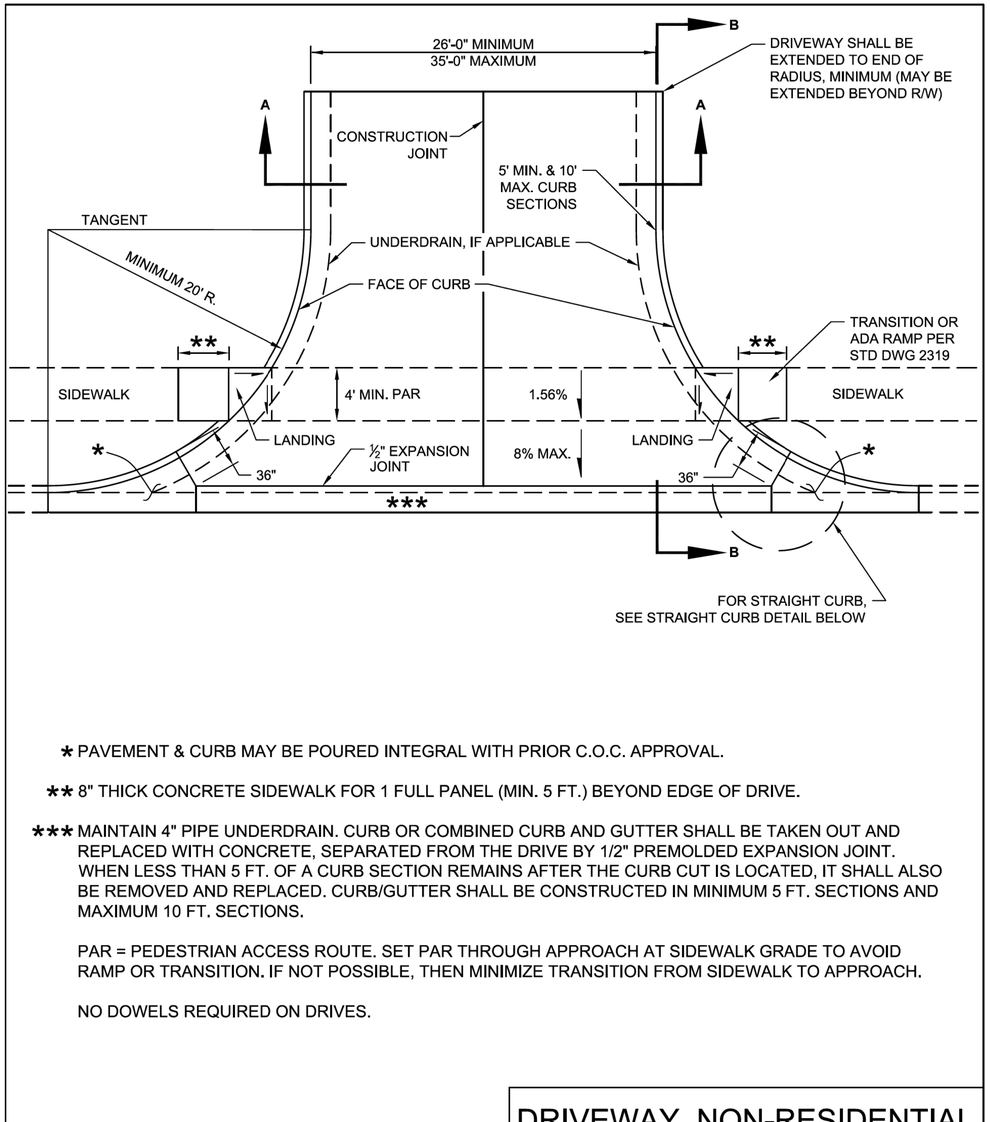

* PAVEMENT & CURB MAY BE POURED INTEGRAL WITH PRIOR C.O.C. APPROVAL.

** 8" THICK CONCRETE SIDEWALK FOR 1 FULL PANEL (MIN. 5 FT.) BEYOND EDGE OF DRIVE.

*** MAINTAIN 4" PIPE UNDERDRAIN. CURB OR COMBINED CURB AND GUTTER SHALL BE TAKEN OUT AND REPLACED WITH CONCRETE, SEPARATED FROM THE DRIVE BY 1/2" PREMOLDED EXPANSION JOINT. WHEN LESS THAN 5 FT. OF A CURB SECTION REMAINS AFTER THE CURB CUT IS LOCATED, IT SHALL ALSO BE REMOVED AND REPLACED. CURB/GUTTER SHALL BE CONSTRUCTED IN MINIMUM 5 FT. SECTIONS AND MAXIMUM 10 FT. SECTIONS.

PAR = PEDESTRIAN ACCESS ROUTE. SET PAR THROUGH APPROACH AT SIDEWALK GRADE TO AVOID RAMP OR TRANSITION. IF NOT POSSIBLE, THEN MINIMIZE TRANSITION FROM SIDEWALK TO APPROACH.

NO DOWELS REQUIRED ON DRIVES.

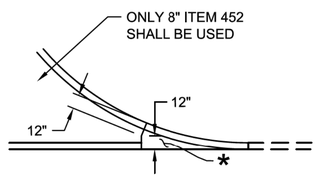

STRAIGHT CURB DETAIL

DRIVEWAY, NON-RESIDENTIAL WITH RADIUS CURBED ROADWAY

CITY OF COLUMBUS, OHIO
DEPARTMENT OF PUBLIC SERVICE
DIVISION OF DESIGN AND CONSTRUCTION

CITY ENGINEER

STD DWG 2203

12/1/14

SHT 1 OF 3

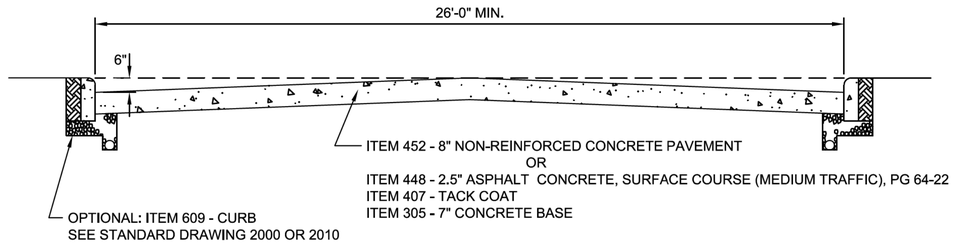

SECTION A-A THROUGH CROWNED PAVEMENT

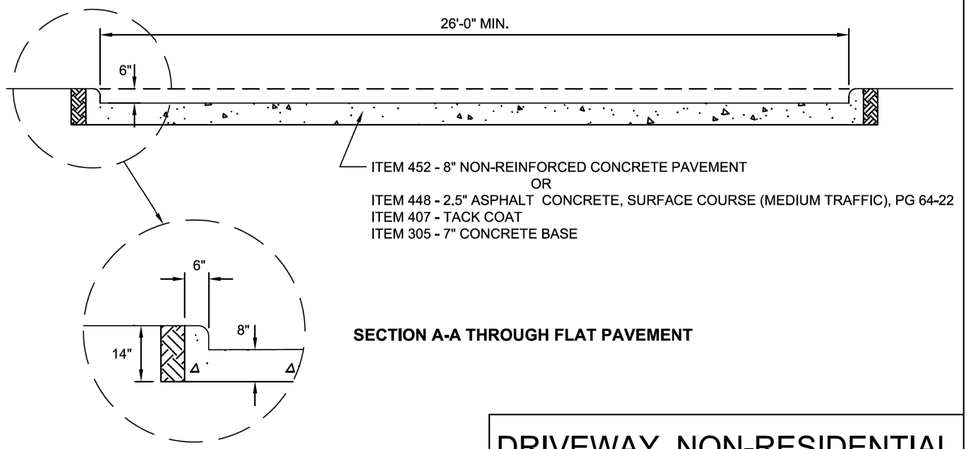

SECTION A-A THROUGH FLAT PAVEMENT

DRIVEWAY, NON-RESIDENTIAL WITH RADIUS CURBED ROADWAY

CITY OF COLUMBUS, OHIO
DEPARTMENT OF PUBLIC SERVICE
DIVISION OF DESIGN AND CONSTRUCTION

STD DWG 2203

12/1/14

SHT 2 OF 3

CALCULATED | CHECKED

MISC. DETAILS - DRIVEWAY DETAILS

FRA-70-14.54

1207
2317

PLOT.CEL
ms consultants, inc.
msconsultants.com
www.msconsultants.com
Ohio DOT Workspace
70\71 East Interchange 2E
Batchplot Spec: \\msconsultants.com\files\production\03\60\06634_2E\standards\plotdrv\batchplt.spc
Pen Table: \\msconsultants.com\files\Standards\usth\ohdot\V8i\ms\plotting\pen\V8i_ms_std.tbl PDF: ohdotV8i
Plot Driver: \\msconsultants.com\files\Standards\usth\ohdot\v8i\ms\plotting\PDF.pltcfg PDF: 60-06634_2E_Columbus
Model: Sheet View: FENCE_VIEW1
Printed: 8/1/2018 @ 2:09:15 PM By: jdouglas
File: N:\03\60\06634_2E\roadway\sheets\105220M020.dgn
34" x 22"

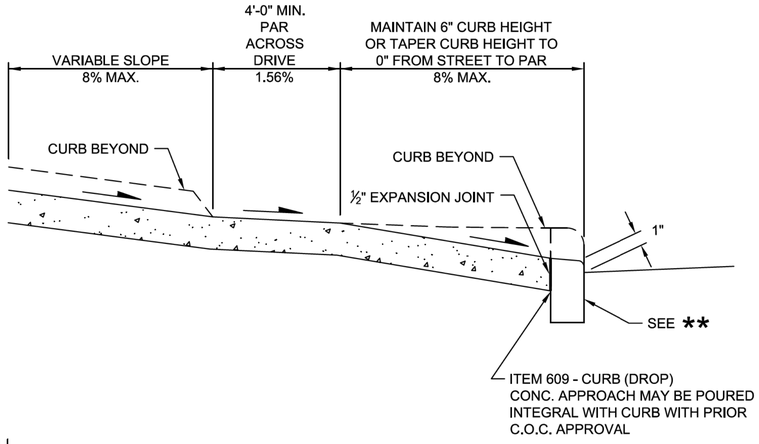

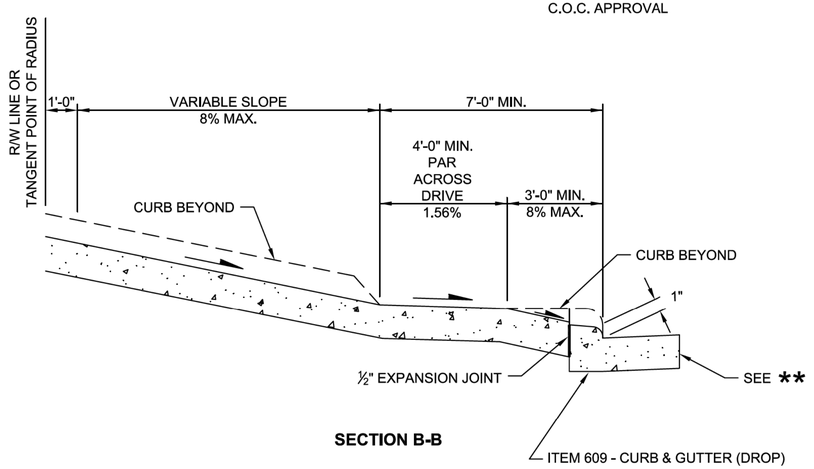

SECTION B-B

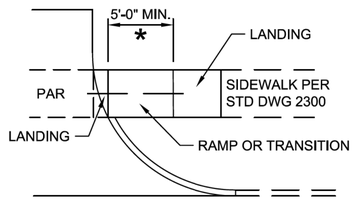

PAR = PEDESTRIAN ACCESS ROUTE. SET PAR THROUGH APPROACH AT SIDEWALK GRADE TO AVOID RAMP OR TRANSITION. IF NOT POSSIBLE, THEN MINIMIZE TRANSITION FROM SIDEWALK TO APPROACH.

* 8" CONCRETE.

** STRAIGHT CURB OR CONCRETE CURB & GUTTER.

DRIVEWAY, NON-RESIDENTIAL WITH RADIUS CURBED ROADWAY

CITY OF COLUMBUS, OHIO
DEPARTMENT OF PUBLIC SERVICE
DIVISION OF DESIGN AND CONSTRUCTION

STD DWG 2203
12/1/14
SHT 3 OF 3

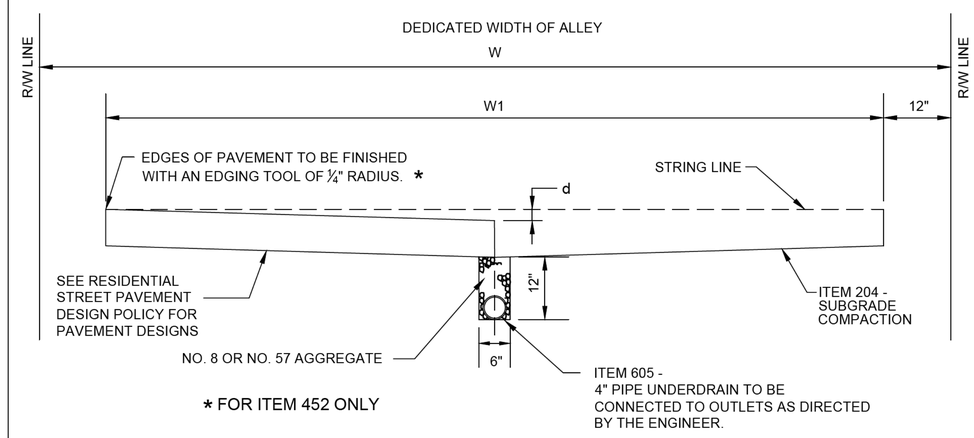

* FOR ITEM 452 ONLY

W (R/W WIDTH)	W1	d
15'	13'	2 ¾"
16'	14'	3"
18'	16'	3 ¼"
20'	18'	3 ½"
OVER 20'	20'	3 ¾"
OVER 24'	24'	4 ½"

TYPICAL SECTION

ALLEY

CITY OF COLUMBUS, OHIO
DEPARTMENT OF PUBLIC SERVICE
DIVISION OF DESIGN AND CONSTRUCTION

CITY ENGINEER

STD DWG 2151
4/30/2018
SHT 1 OF 1

CALCULATED | CHECKED

MISC. DETAILS - DRIVEWAY DETAILS

FRA-70-14.54

1208
2317

34" x 22"
Model: Sheet View: FENCE_VIEW1
Printed: 8/1/2018 @ 2:09:30 PM By: jdouglas
File: N:\03\60\06634_2E\roadway\sheets\105322GM022.dgn
Batchplot Spec: \\msconsultants.com\files\production\03\60\06634_2E\standards\plotdrv\batchplt.spc
Pen Table: \\msconsultants.com\files\Standards\ustn\ohdot\V8i\ms\plotting\pen\V8i_ms_std.tbl
Plot Driver: \\msconsultants.com\files\Standards\ustn\ohdot\v8i\ms\plotting\PDF.pltcfg
PCF: ohdotV8i
PCF: 60-06634_2E_Columbus
Ohio DOT Workspace
70\71 East Interchange 2E
ms consultants, inc.
msconsultants.com
PLOT.CEL
www.msconsultants.com

THIS STANDARD DRAWING IS FOR DRIVES ON LOCAL OR COLLECTOR STREETS WITH SPEEDS ≤ 35 MPH, UNLESS APPROVED OTHERWISE BY DIVISION OF PLANNING & OPERATIONS.

* CURB OR COMBINED CURB AND GUTTER SHALL BE TAKEN OUT AND REPLACED WITH CONCRETE, SEPARATED FROM THE DRIVE BY 1/2" PREMOLDED EXPANSION JOINT. WHEN LESS THAN 5 FT. OF A CURB SECTION REMAINS AFTER THE CURB CUT IS LOCATED, IT SHALL ALSO BE REMOVED AND REPLACED. CURB SHALL BE CONSTRUCTED IN MINIMUM 5 FT. SECTIONS AND MAXIMUM 10 FT. SECTIONS.

** SIDEWALK WIDTH SHALL BE PER STANDARD DRAWING 2300. SIDEWALK THICKNESS SHALL BE 8" CONCRETE TO ONE FULL PANEL (MIN. 5 FT.) BEYOND EDGE OF DRIVE.

PAR = PEDESTRIAN ACCESS ROUTE. SET PAR THROUGH APPROACH AT SIDEWALK GRADE TO AVOID RAMP OR TRANSITION. IF NOT POSSIBLE, THEN MINIMIZE TRANSITION FROM SIDEWALK TO APPROACH.

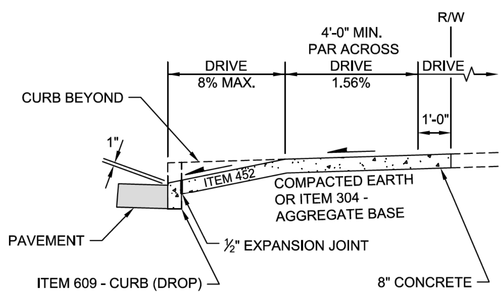

STRAIGHT CURB SECTION

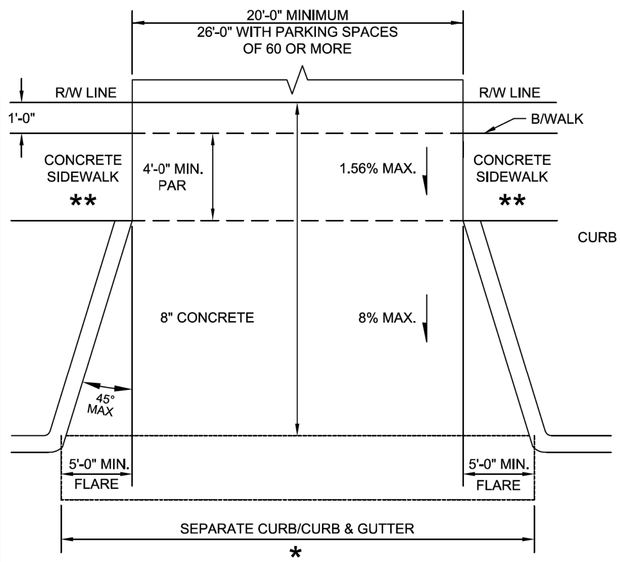

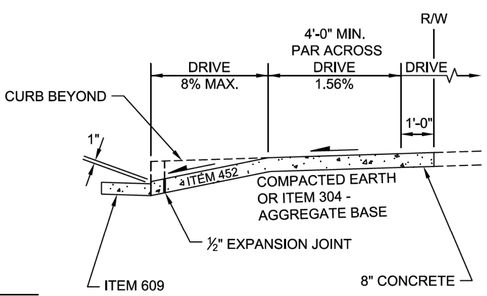

COMBINATION CURB AND GUTTER SECTION

DRIVEWAY, NON-RESIDENTIAL WITH FLARES CURBED ROADWAY

CITY OF COLUMBUS, OHIO
DEPARTMENT OF PUBLIC SERVICE
DIVISION OF DESIGN AND CONSTRUCTION

CITY ENGINEER

STD DWG 2202

12/1/14

SHT 1 OF 4

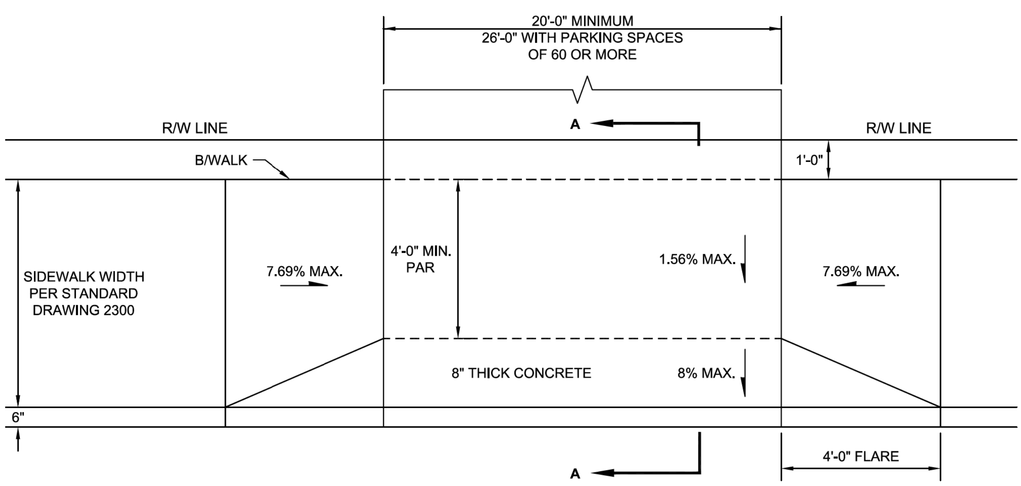

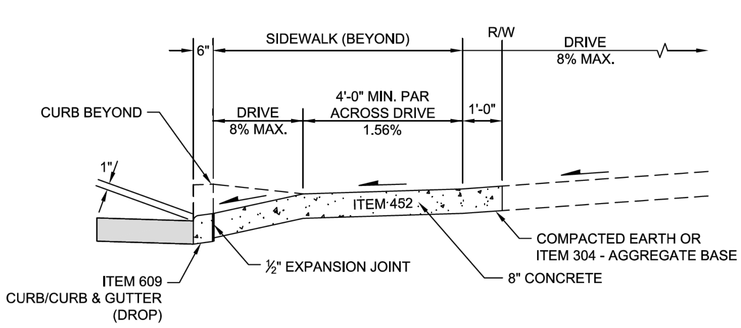

SECTION A-A
SEE SHEET 1 OF 4 FOR ADDITIONAL INFORMATION

DRIVEWAY, NON-RESIDENTIAL WITH FLARES CURBED ROADWAY

SIDEWALK ADJACENT TO CURB

CITY OF COLUMBUS, OHIO
DEPARTMENT OF PUBLIC SERVICE
DIVISION OF DESIGN AND CONSTRUCTION

STD DWG 2202

12/1/14

SHT 2 OF 4

ms consultants, inc.

1209 / 2317	FRA-70-14.54	MISC. DETAILS - CONCRETE DRIVEWAY	CALCULATED / CHECKED

34" x 22"
Model: Sheet View: FENCE_VIEW1
Printed: 6/19/2018 @ 9:09:29 AM By: jdouglas
File: N:\03\60\06634_2E\roadway\sheets\105322GM026.dgn
Batchplot Spec: \\msconsultants.com\files\production\03\60\06634_2E\standards\plotdrv\batchplt.spc
Pen Table: \\msconsultants.com\files\Standards\ustn\ohdot\V8i\ms\plotting\pen\V8i_ms_std.tbl
Plot Driver: \\msconsultants.com\files\Standards\ustn\ohdot\v8i\ms\plotting\PDF.pltcfg
PCF: ohdotV8i
PCF: 60-06634_2E_Columbus
Ohio DOT Workspace
70\71 East Interchange 2E
ms consultants, inc.
msconsultants.com
PLOT.CEL
www.msconsultants.com

* USE WHEN FRONT RAMP OF DRIVE IS LONGER THAN 2 FT. MAINTAIN R/W CLEARANCE FOR WALK.

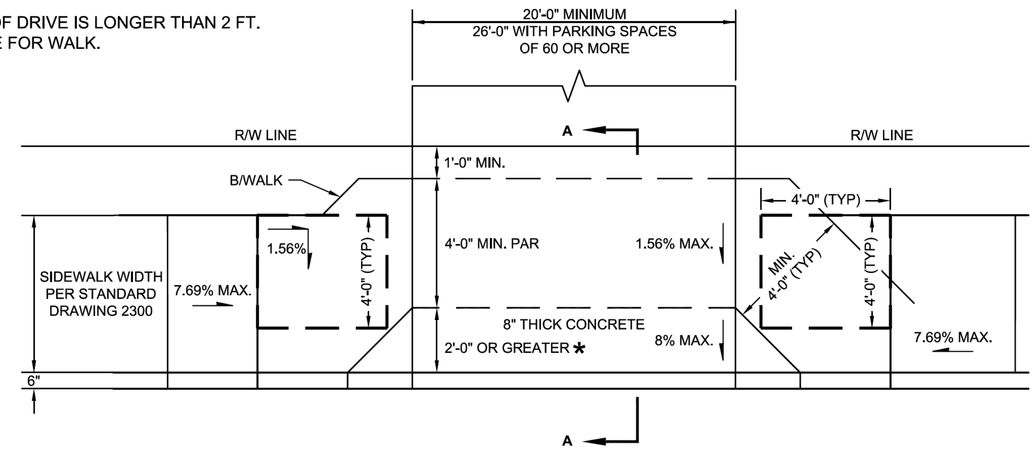

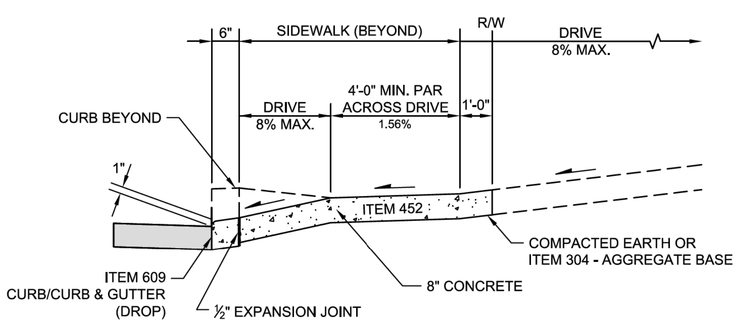

SECTION A-A
SEE SHEET 1 OF 4 FOR ADDITIONAL INFORMATION
FOR ADDITIONAL INFORMATION SEE SHEET 1929

DRIVEWAY, NON-RESIDENTIAL WITH FLARES CURBED ROADWAY

SIDEWALK ADJACENT TO CURB WITH RUN-AROUND

CITY OF COLUMBUS, OHIO
DEPARTMENT OF PUBLIC SERVICE
DIVISION OF DESIGN AND CONSTRUCTION

STD DWG 2202
12/1/14
SHT 3 OF 4

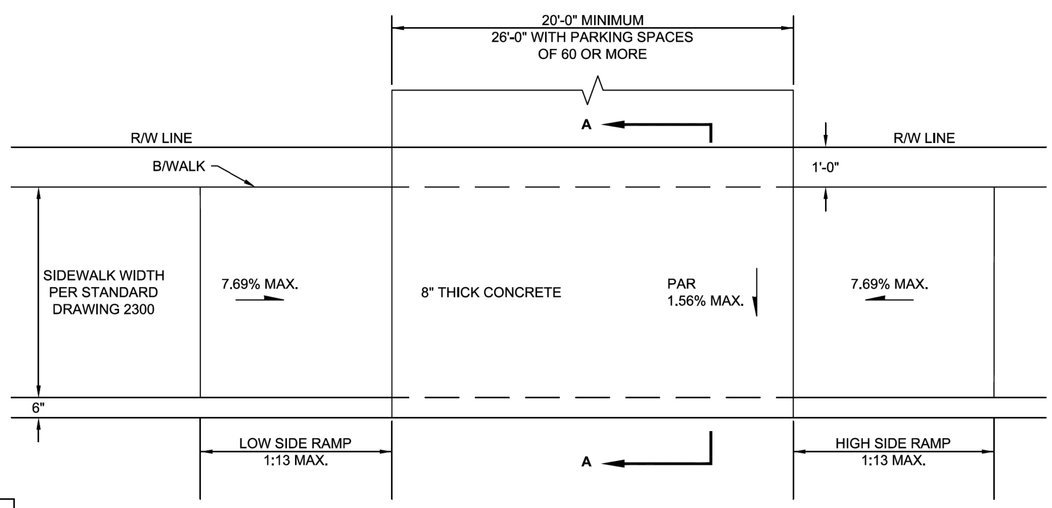

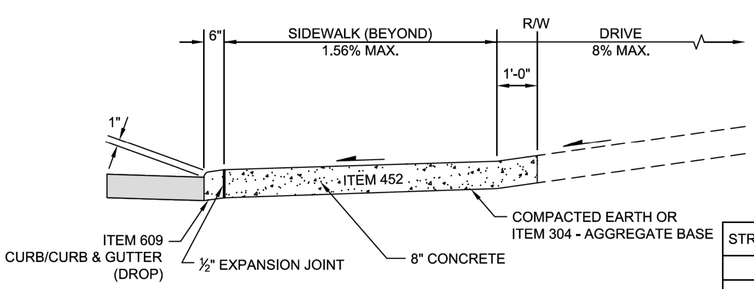

SECTION A-A
SEE SHEET 1 OF 4 FOR ADDITIONAL INFORMATION
FOR ADDITIONAL INFORMATION SEE SHEET 1929

STREET GRADE	RAMP LENGTH (1:13)	
	LOW SIDE *	HIGH SIDE *
1%	5'-6"	7'-2"
2%	5'-0"	8'-4"
3%	4'-6"	10'-0"
4%	4'-2"	12'-6"
5%	3'-10"	16'-8"

* MEASURED ALONG THE BACK OF CURB

DRIVEWAY, NON-RESIDENTIAL WITH FLARES CURBED ROADWAY

SIDEWALK ADJACENT TO CURB

CITY OF COLUMBUS, OHIO
DEPARTMENT OF PUBLIC SERVICE
DIVISION OF DESIGN AND CONSTRUCTION

STD DWG 2202
12/1/14
SHT 4 OF 4

ms consultants, inc.

PLOT.CEL

ms consultants, inc.
msconsultants.com

www.msconsultants.com

Ohio DOT Workspace
70\71 East Interchange 2E

0 0.5" 1"

Batchplot Spec: \\msconsultants.com\Files\Production\03\60\06634_2E\standards\plotdrv\batchplt.spc
Pen Table: \\msconsultants.com\Files\Standards\usth\ohdot\V8i\ms\plotting\pen\V8i_ms_std.tbl PDF: ohdotV8i
Plot Driver: \\msconsultants.com\Files\Standards\usth\ohdot\v8i\ms\plotting\PDF.pltcfg PCF: 60-06634_2E_Columbus

Model: Sheet @ 2:09:45 PM View: FENCE_VIEW1
Printed: 8/1/2018 By: jdouglas
File: N:\03\60\06634_2E\roadway\sheets\05322601024.dgn

34" x 22"

BACKFILL WITHIN RIGHT-OF-WAY

CITY OF COLUMBUS, OHIO
DEPARTMENT OF PUBLIC SERVICE
DIVISION OF DESIGN AND CONSTRUCTION

CITY ENGINEER

STD DWG
2179

04/30/18

SHT 1 OF 1

CALCULATED | CHECKED

MISC. DETAILS - BACKFILLING WITHIN HIGHWAY R/W

FRA-70-14.54

1211
2317

ms consultants, inc.

PLOT.CEL
ms consultants, inc.
msconsultants.com
www.rmsconsultants.com
Ohio DOT Workspace
70\71 East Interchange 2E
Batchplot Spec: \\rmsconsultants.com\files\production\03\60\06634_2E\standards\plotdrv\batchplt.spc
Pen Table: \\rmsconsultants.com\files\Standards\ustn\ohdot\V8i\ms\plotting\pen\V8i_ms_std.tbl
Plot Driver: \\rmsconsultants.com\files\Standards\ustn\ohdot\v8i\ms\plotting\PDF.pltcfg
PDF: ohdotV8i
PDF: 60-06634_2E_Columbus
0 1" 0.5"
34" x 22"
View: FENCE_VIEW1
By: jdouglas
Model: Sheet
Printed: 8/1/2018 @ 2:09:58 PM
File: N:\03\60\06634_2E\roadway\sheets\05322GM029.dgn

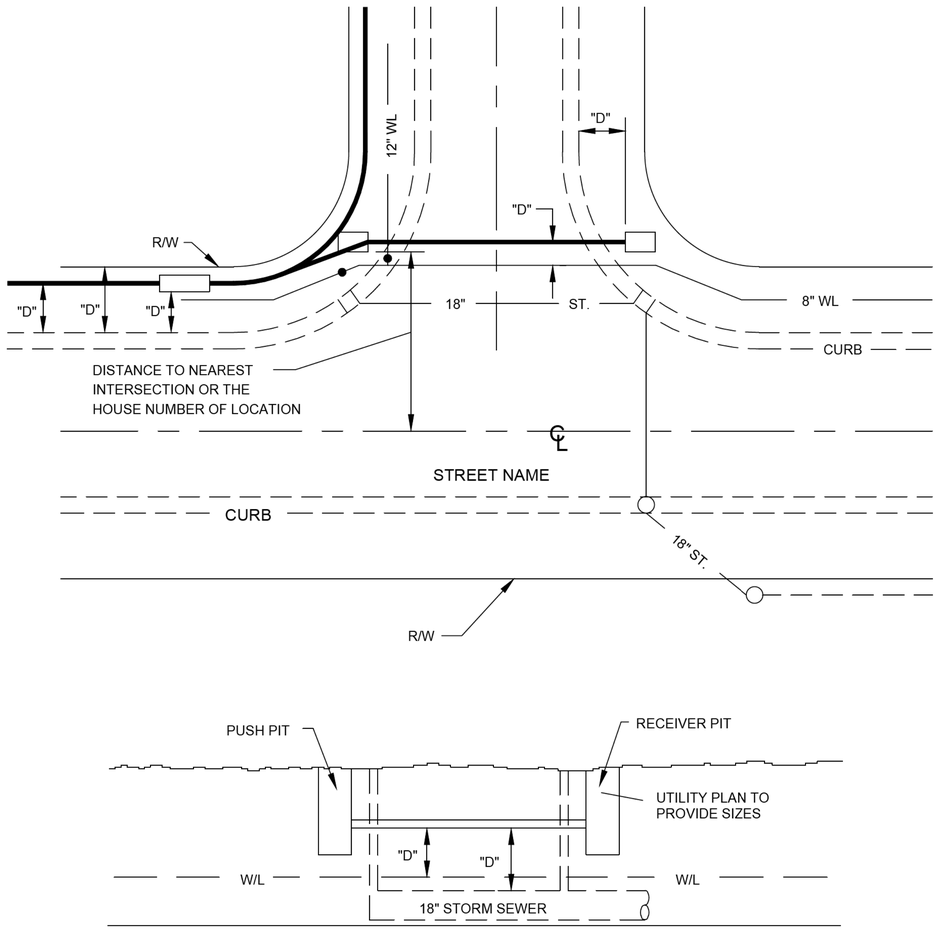

"D" DENOTES WHERE DIMENSIONS ARE NEEDED

PAVEMENT REPLACEMENT SHALL BE
PER STANDARD DRAWING 1441

DIRECTIONAL BORING

CITY OF COLUMBUS, OHIO
DEPARTMENT OF PUBLIC SERVICE
DIVISION OF DESIGN AND CONSTRUCTION

STD DWG
2166

6/1/13

Hassan Zahra
CITY ENGINEER

SHT 1 OF 2

TYPICAL LOCATION
FOR CURBED STREETS

TYPICAL LOCATION
FOR UNCURBED STREETS

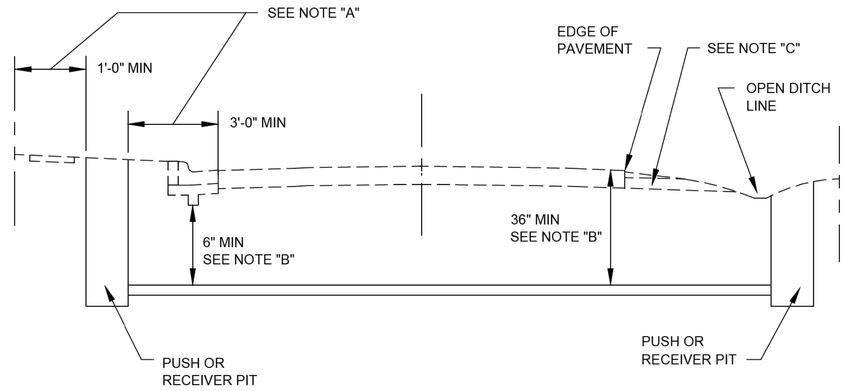

NOTES:

"A" MINIMUM OFFSETS SHALL BE 1 FOOT FROM RIGHT-OF-WAY LINES OR 3 FEET FROM EDGE OF PAVEMENT OR EDGE OF SHOULDER.

"B" MINIMUM DEPTH FROM TOP OF PUSH TO TOP OF CURB FOR STANDARD COMBINED CURB AND GUTTER IS 30", STRAIGHT CURB 36", AND FLEXIBLE PAVEMENT 36" BELOW TOP OF PAVEMENT.

"C" IF AGGREGATE DRAINS ARE DISTURBED, THEY SHALL BE REPLACED.

DIRECTIONAL BORING

CITY OF COLUMBUS, OHIO
DEPARTMENT OF PUBLIC SERVICE
DIVISION OF DESIGN AND CONSTRUCTION

STD DWG
2166

6/1/13

SHT 2 OF 2

CALCULATED | CHECKED

MISC. DETAILS - DIRECTIONAL BORING

FRA-70-14.54

1214
2317

ms consultants, inc.

34" x 22"
Model: Sheet View: FENCE_VIEW1
Printed: 8/1/2018 @ 2:10:12 PM By: jdouglas
File: N:\03\60\06634_2E\roadway\sheets\105322GM032.dgn
Batchplot Spec: \\msconsultants.com\files\production\03\60\06634_2E\standards\plotdrv\batchplt.spc
Pen Table: \\msconsultants.com\files\Standards\ustn\ohdot\V8i\ms\plotting\pen\V8i_ms_std.tbl
Plot Driver: \\msconsultants.com\files\Standards\ustn\ohdot\v8i\ms\plotting\PDF.pltcfg
DGN: ohdotV8i
PCF: 60-06634_2E_Columbus
Ohio DOT Workspace
70\71 East Interchange 2E
ms consultants, inc.
msconsultants.com
PLOT.CEL
www.msconsultants.com

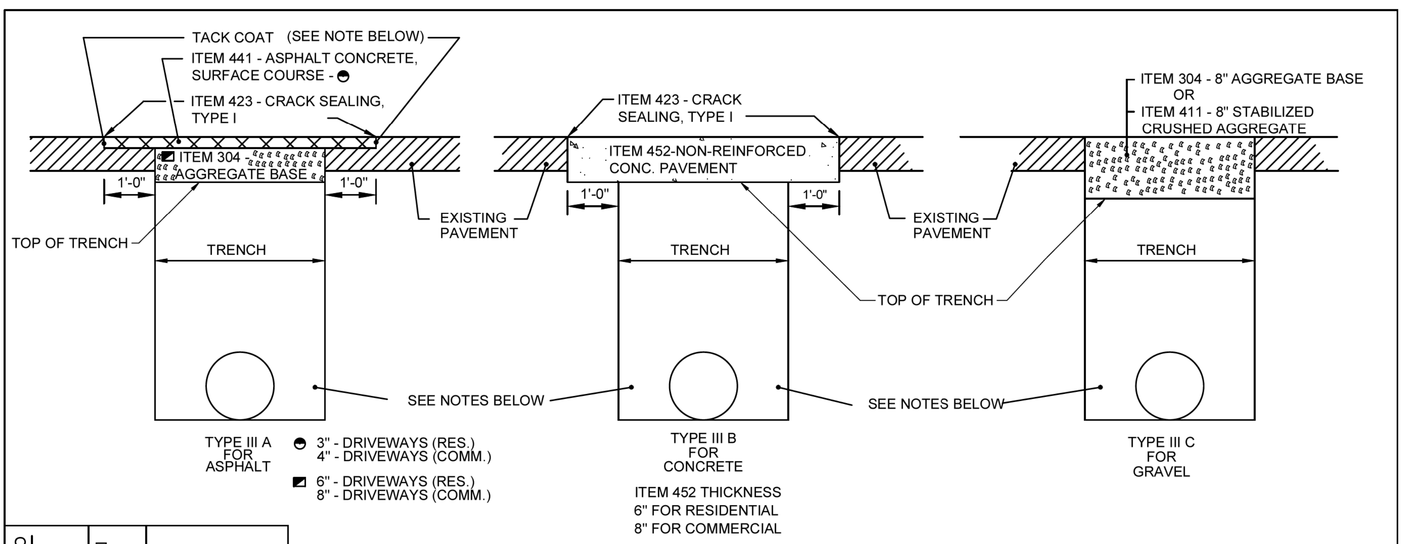

DRIVEWAY REPLACEMENT

CITY OF COLUMBUS, OHIO
DEPARTMENT OF PUBLIC SERVICE
DIVISION OF DESIGN AND CONSTRUCTION

CITY ENGINEER

STD DWG 2160

04/30/18

SHT 1 OF 1

BACKFILL FOR ALL TRENCHES SHALL BE IN ACCORDANCE WITH APPLICABLE SPECIFICATIONS.

PERMANENT REPAVING SHALL NOT BE DONE UNTIL SO ORDERED OR APPROVED BY THE ENGINEER. THE EDGE SHALL BE CUT VERTICAL AND TRIMMED TO PROVIDE A STRAIGHT LINE.

ITEM 407 - TACK COAT SHALL BE APPLIED AT A RATE OF 0.08 GAL/SY.

ALL EXISTING CONCRETE WALKS OR CONCRETE PAVEMENTS BEING REPLACED SHALL BE REMOVED AT AN EXISTING JOINT AND REPLACED PER STANDARD DRAWING.

DRIVEWAY PAVEMENT SHALL BE REPLACED BY EITHER MATCHING THE EXISTING MATERIALS & THICKNESS, OR BY USING THE ABOVE THICKNESS, WHICHEVER IS GREATER.

IF COMPLETE DRIVE APPROACH IS BEING REBUILT REFERENCE THE STANDARD DRAWING APPLICABLE TO THE DRIVE.

ms consultants, inc.

PLOT.CEL
ms consultants, inc.
msconsultants.com
www.msconsultants.com
Ohio DOT Workspace
70\71 East Interchange 2E
Batchplot Spec: \\msconsultants.com\Files\production\03\60\06634_2E\standards\plotdrv\batchplt.spc
Pen Table: N:\03\60\06634_2E\standards\tables\V8i_ms_std_06634_2D_Plan View.tbl
Plot Driver: \\msconsultants.com\Files\Standards\usetn\ohdot\v8i\ms\plotting\PDF.pltcfg
ODF: ohdot\V8i
PCF: 60-06634_2E_Columbus
Model: Sheet
Printed: 6/19/2018 @ 9:10:39 AM
File: N:\03\60\06634_2E\utilities\sheets\V05320U0023.dgn
View: FENCE_VIEW1
By: jdoughas
3.4" x 22"

HEAT WELDED ASPHALT SURFACE
MINIMUM DEPTH 2"

NEAT STRAIGHT EDGE AND ITEM 407 - TACK COAT
AREA HATCHED IS TO BE HEAT WELDED
(SEE NOTE "B")

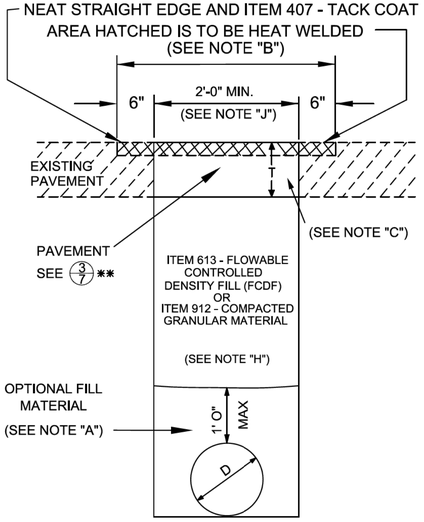

TYPE I

STANDARD FLEXIBLE ASPHALT REPAIR WITH HEATWELD SURFACE (SEE NOTE "B")

HEAT WELDED ASPHALT SURFACE
MINIMUM DEPTH 2"

NEAT STRAIGHT EDGE AND ITEM 407 - TACK COAT
AREA HATCHED IS TO BE HEAT WELDED
(SEE NOTE "B")

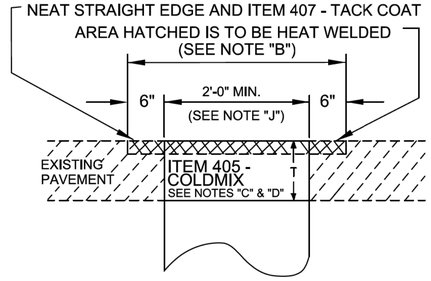

TYPE II

WINTER OPERATIONS FLEXIBLE ASPHALT REPAIR WITH HEATWELD SURFACE (SEE NOTE "E")

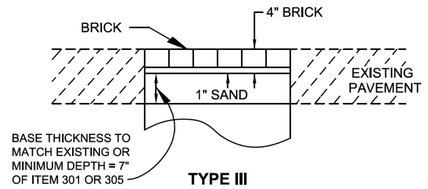

TYPE III

BRICK STREET REPAIR (SEE NOTE "F")

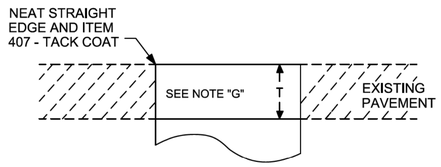

TYPE IV

ALLEY REPAIR

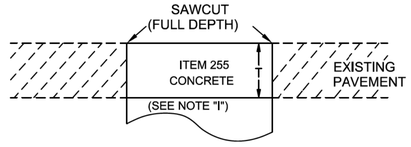

TYPE V

CONCRETE STREET REPAIR OR CONCRETE BUS PAD

BACKFILL FOR ALL TYPES SHALL MEET THE REQUIREMENTS SHOWN IN TYPE I ABOVE.

T: MATCH EXISTING PAVEMENT THICKNESS, HOWEVER, MINIMUM OF 10" ON ALL STREET CUTS AND 6" ON ALL ALLEYS.

PAVEMENT & UTILITY CUT REPAIR STANDARDS

CITY OF COLUMBUS, OHIO
DEPARTMENT OF PUBLIC SERVICE
DIVISION OF DESIGN AND CONSTRUCTION

STD DWG 1441

12/1/14

CITY ENGINEER

SHT 1 OF 7

SIDEWALK AND CURB REPAIR DETAILS

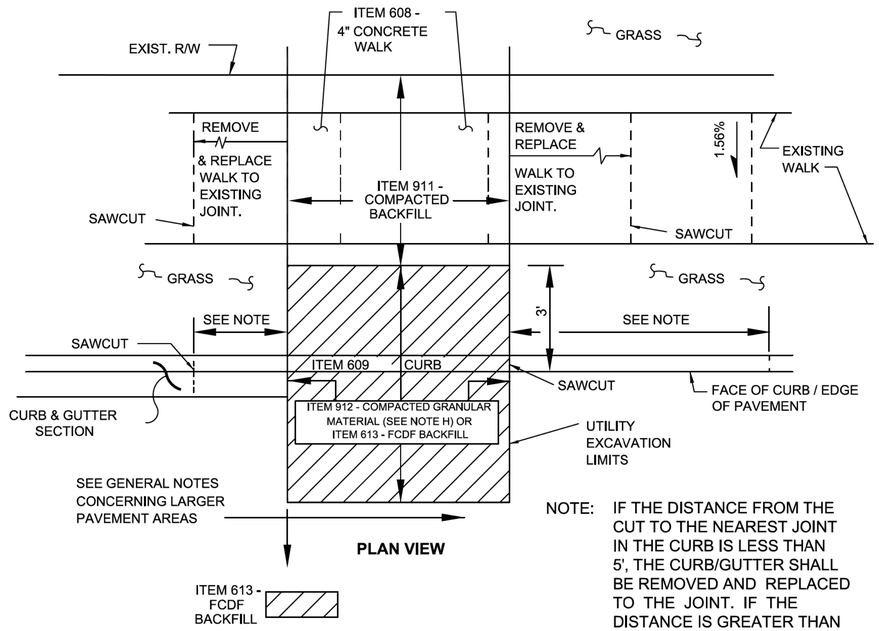

NOTE: IF THE DISTANCE FROM THE CUT TO THE NEAREST JOINT IN THE CURB IS LESS THAN 5', THE CURB/GUTTER SHALL BE REMOVED AND REPLACED TO THE JOINT. IF THE DISTANCE IS GREATER THAN 5', THE CURB MAY REMAIN.

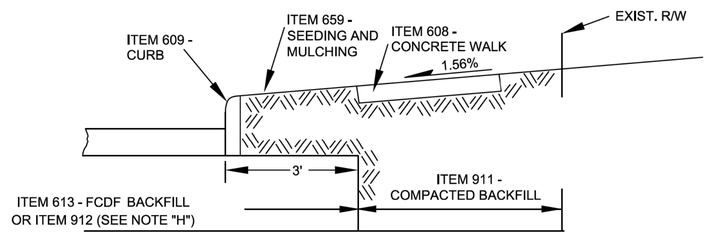

BOTTOM OF EXCAVATION

ALL GRASS AREAS SHALL BE SEEDED IN ACCORDANCE WITH ITEM 659 - SEEDING AND MULCHING.

PAVEMENT & UTILITY CUT REPAIR STANDARDS

CITY OF COLUMBUS, OHIO
DEPARTMENT OF PUBLIC SERVICE
DIVISION OF DESIGN AND CONSTRUCTION

STD DWG 1441

12/1/14

SHT 2 OF 7

CALCULATED | CHECKED

MISC. DETAILS - PAVEMENT AND UTILITY CUT REPAIR

FRA-70-14.54

1216
2317

ms consultants, inc.

PLOT.CEL

ms consultants, inc.
msconsultants.com

www.msconsultants.com

Ohio DOT Workspace
70\71 East Interchange 2E

1"
0.5"
0

DGF: ohdotV8i
PCF: 60-06634_2E_Columbus

Batchplot Spec: \\msconsultants.com\Files\production\03\60\06634_2E\standards\plotdrv\batchplt.spc
Pen Table: N:\03\60\06634_2E\standards\tables\V8i_ms_std_06634_2D_Plan View.tbl
Plot Driver: \\msconsultants.com\Files\Standards\usetn\ohdot\v8i\ms\plotting\PDF.pltcfg

Model: Sheet
Printed: 6/19/2018 @ 9:10:52 AM
File: N:\03\60\06634_2E\utilities\sheets\105220D023A.dgn

View: FENCE_VIEW1
By: jdouglas

34" x 22"

GENERAL NOTES

EXCAVATION PERMIT REQUIRED: A CITY OF COLUMBUS STREET EXCAVATION PERMIT IS REQUIRED FOR ALL EXCAVATIONS WITHIN THE PUBLIC RIGHT-OF-WAY, AS SET FORTH BY COLUMBUS CITY CODE, CHAPTER 903 AND ISSUED IN ACCORDANCE WITH PROVISIONS IN THE GENERAL RULES AND REGULATIONS OF THE DEPARTMENT OF PUBLIC SERVICE.

SCOPE OF WORK

THIS WORK SHALL CONSIST OF PAVEMENT REMOVAL, NECESSARY EXCAVATION, AND PAVEMENT REPLACEMENT IN ACCORDANCE WITH THE DETAILS SHOWN HEREIN. ALL WORK AND MATERIALS SHALL CONFORM TO THE REQUIREMENTS OF THE CURRENT CITY OF COLUMBUS CONSTRUCTION AND MATERIALS SPECIFICATION (CMSC).

PROCEDURES USED FOR THE PAVEMENT REMOVAL AND REPLACEMENT SHALL NOT CAUSE SPALLING OR CRACKING OF ADJACENT PAVEMENT.

WHEN THE PAVEMENT IS REMOVED AND THE CONTRACTOR IS UNABLE TO COMPLETE THE REQUIRED REPLACEMENT IN TIME FOR IT TO BE OPENED TO TRAFFIC AS INDICATED ON THE PERMIT, THE EXCAVATION SHALL BE FILLED WITH A BITUMINOUS PATCH MATERIAL WITH A DURABLE SURFACE OR PROPERLY PLATED. (AS PER CITY CODE CHAPTER 903 &/OR SHEET 7 OF THIS STANDARD DRAWING) THE CONTRACTOR WILL BE REQUIRED TO MAINTAIN THESE PATCHES WHILE THEY ARE IN SERVICE. THE COST OF PLACING, MAINTAINING, AND REMOVING AND DISPOSING OF THE TEMPORARY PATCHES OR PLATES WILL BE AT THE CONTRACTOR'S EXPENSE.

WHEN ITEM 613 FCDF IS USED AS A BACKFILL, NO PAVEMENT SHALL BE PLACED UNTIL BLEED WATER HAS BEEN EVAPORATED FROM THE FCDF SURFACE OR HAS BEEN DRAINED OR REMOVED FROM THE SURFACE. ITEM 613 FCDF IS NOT PERMITTED AS A TEMPORARY DRIVING SURFACE.

THE BACKFILLING PAVEMENT REPAIR AND/OR HEAT WELDING SHALL BE DONE BY THE CONTRACTOR OR PERMITEE IN ACCORDANCE WITH CITY SPECIFICATIONS. IF DESIRED, ANY OR ALL OF THIS WORK CAN BE PERFORMED BY THE CITY OF COLUMBUS. THE CITY SHALL COLLECT APPROPRIATE FEES AT THE TIME THE PERMIT IS ISSUED FOR SAID WORK.

RESTORATION OF ANY SIDEWALK, CURB, STREET PAVEMENT, ETC., SHALL OCCUR NO LATER THAN 30 DAYS AFTER CONCLUSION OF ANY UTILITY REPAIR OR INSTALLATION ACTIVITY. CONSTRUCTION ACTIVITY COMPLETED DECEMBER THROUGH APRIL SHALL BE RESOLVED NO LATER THAN MAY 31ST. ADDITIONAL PERMITS SHALL NOT BE ISSUED UNTIL THE VIOLATIONS ARE CORRECTED TO THE SATISFACTION OF THE DEPARTMENT OF PUBLIC SERVICE. IN ADDITION, EACH VIOLATION MAY BE DEALT WITH IN ACCORDANCE WITH SECTION 903.99 OF THE COLUMBUS CITY CODE.

** PAVING STANDARDS FOR LARGE TRENCHES OR PAVING AREAS

THE PAVEMENT REPAIR SECTION SHALL CONFORM TO 3" OF ITEM 448 - ASPHALT CONCRETE ON EITHER 7" OF ITEM 301 - ASPHALT CONCRETE BASE OR ITEM 305 - PORTLAND CEMENT CONCRETE BASE.

PAVEMENT & UTILITY CUT REPAIR STANDARDS	
CITY OF COLUMBUS, OHIO DEPARTMENT OF PUBLIC SERVICE DIVISION OF DESIGN AND CONSTRUCTION	STD DWG 1441 12/1/14 SHT 3 OF 7

WHEN A TRENCH EXCEEDS 100 FT. IN LENGTH, THE REPAIR SHALL INCLUDE PLANING A FULL LANE WIDTH (OR ANY OTHER LANE WIDTH AS DIRECTED BY THE DEPARTMENT OF PUBLIC SERVICE) TO A DEPTH OF 1½" FOR THE ENTIRE LENGTH OF THE TRENCH. THE PLANED AREA SHALL THEN BE REPAVED WITH A PAVER IN ACCORDANCE WITH CURRENT CITY STANDARD SPECIFICATIONS. ITEM 423 - CRACK SEALING, TYPE 1 SHALL BE APPLIED TO EXPOSED JOINTS ONCE THE PAVING OPERATION HAS BEEN COMPLETED.

WHEN TRENCHING WORK CROSSES LANES, ALL AFFECTED LANES SHALL REQUIRE PLANING AND RESURFACING AS DESCRIBED ABOVE. THIS WORK SHALL INCLUDE ALL OF THE AFFECTED PAVEMENT AREA.

SPECIAL NOTES

NOTE 'A' : WHEN USING FLOWABLE CONTROLLED DENSITY FILL (FCDF), THE OPTIONAL FILL AREA OVER THE CONDUIT MAY BE BACKFILLED WITH SAND, GRANULAR MATERIAL, OR OTHER SUITABLE 912 MATERIAL, FOR A DISTANCE NOT TO EXCEED 1 FT. A PROTECTIVE BARRIER OF VISQUEEN OR SIMILAR MATERIAL IS PERMITTED.

NOTE 'B' : FOR TYPE I AND TYPE II CUT REPAIRS, THE AREA TO BE HEAT WELDED IS TO INCLUDE THE CUT AND EXTEND FOR 6" BEYOND EACH SIDE OF THE CUT FOR A NOMINAL DEPTH OF 2".

NOTE 'C' : FOR TYPE I AND TYPE II PAVEMENT REPAIR, THE ITEM 448 - HOT ASPHALT CONCRETE OR ITEM 405 - COLD MIX SHALL BE PLACED IN LIFTS NOT EXCEEDING 3" AND COMPACTED WITH A COMBINATION VIBRATORY PLATE COMPACTOR, OR A VIBRATORY STEEL WHEELED ROLLER WITH A MINIMUM CERTIFIED FORCE OF 2000 POUNDS. IN ALL CASES THE SURFACE LIFT SHALL BE COMPACTED WITH THE VIBRATORY STEEL WHEELED ROLLER. WHEN PLACING ITEM 405 - COLD MIX FULL DEPTH, MATERIAL TEMPERATURE SHALL BE 70 DEGREES OR ABOVE.

NOTE 'D' : COLD MIX SHALL BE ITEM 405 - COLD MIX OR OTHER COLD MIX APPROVED BY THE CITY OF COLUMBUS. IN LIEU OF COLD MIX, THE CONTRACTOR MAY STOCKPILE ITEM 448 - ASPHALT CONCRETE AND REHEAT IT TO PLACE IN CUT AS PAVEMENT REPAIR. TYPE II PAVEMENT REPLACEMENT SHALL CONSIST OF FULL DEPTH ITEM 405 - COLD MIX FOR SMALL EXCAVATIONS. LARGE EXCAVATIONS SHALL REQUIRE A MINIMUM OF 7" OF FAST SETTING PORTLAND CEMENT AND 2" OF ITEM 405 - COLD MIX.

NOTE 'E' : THE COLD MIX IS TO BE REPLACED WITH ITEM 448 - ASPHALT CONCRETE WHICH IS TO BE HEAT WELDED AS SET FORTH IN NOTE 'B'. THIS WORK SHALL BE PERFORMED AS SOON AS ASPHALT IS AVAILABLE.

PAVEMENT & UTILITY CUT REPAIR STANDARDS	
CITY OF COLUMBUS, OHIO DEPARTMENT OF PUBLIC SERVICE DIVISION OF DESIGN AND CONSTRUCTION	STD DWG 1441 12/1/14 SHT 4 OF 7

CALCULATED | CHECKED

MISC. DETAILS - PAVEMENT AND UTILITY CUT REPAIR

FRA-70-14.54

1217
2317

PLOT.CEL
ms consultants, inc.
msconsultants.com
www.msconsultants.com
Ohio DOT Workspace
70\71 East Interchange 2E
PCF: 60-06634_2E_Columbus
PCF: ohdot\V8i
Batchplot Spec: \\msconsultants.com\Files\production\03\60\06634_2E\standards\plotdrv\batchplt.spc
Pen Table: N:\03\60\06634_2E\standards\tables\V8i_ms_std_06634_2D_Plan View.tbl
Plot Driver: \\msconsultants.com\Files\Standards\usetn\ohdot\v8i\ms\plotting\PDF.pltdrg
Model: Sheet
Printed: 6/19/2018 @ 9:11:07 AM
File: N:\03\60\06634_2E\utilities\sheets\V05220U0023B.dgn
View: FENCE_VIEW1
By: jdoughas
3.4" x 22"
ms consultants, inc.

NOTE 'F' : REPAIR OF BRICK STREETS

1. BRICKS REMOVED FROM A REPAIR AREA SHALL BE STORED IN A SAFE PLACE BY THE CONTRACTOR FOR REUSE. THE CONTRACTOR WILL BE RESPONSIBLE FOR REPLACING ANY BRICKS THAT ARE STOLEN OR DAMAGED, AT NO ADDITIONAL COST TO THE CITY.

2. IF BRICKS ARE SUPPLIED BY THE CONTRACTOR, THEY MUST FIRST BE APPROVED BY THE CITY BEFORE THEY ARE USED.

3. SAW CUTTING: ALL PARTIAL BRICKS SHALL BE SAWCUT. FURTHER, NO BRICK WILL BE PERMITTED TO BE CUT, FOR REPLACEMENT, TO A LENGTH LESS THAN 1/2 ITS ORIGINAL LENGTH. THIS MAY REQUIRE SAW CUTTING OF ADJACENT UNDISTURBED BRICK(S).

4. THE EXISTING BASE MATERIAL SHALL BE CUT BACK TO AS NEARLY VERTICAL AS POSSIBLE. IF SHEARING OF THE ADJACENT BASE RESULTS, THE CONTRACTOR SHALL REMOVE ADDITIONAL BASE MATERIAL UNTIL A VERTICAL FACE IS ACHIEVED.

5. THE MAXIMUM WIDTH OF A BRICK MORTAR JOINT SHALL BE 1/2". THIS RESTRICTION SHALL ALSO APPLY TO THE JOINT FORMED ADJACENT TO THE PERIMETER OF A REPAIR AREA, WHERE THE ROWS MAY NOT BE PARALLEL TO ONE ANOTHER.

6. MORTARING OF JOINTS: ALL JOINTS SHALL BE MORTARED WITH A 50/50 MIXTURE BY VOLUME OF SAND AND CEMENT SO AS TO PROVIDE A FLUSH FINISH. THIS MAY REQUIRE MORE THAN ONE APPLICATION. FURTHER, MECHANICAL VIBRATION WILL BE REQUIRED FOR CONSOLIDATION OF DRY MORTAR MIX.

NOTE 'G' : FOR ALLEY REPAIRS, THE PAVEMENT REPLACEMENT SHALL CONFORM TO THE TYPE AND THICKNESS OF THE EXISTING PAVEMENT. CHIP AND SEAL TYPE ALLEYS SHALL REQUIRE MATCHING THE EXISTING THICKNESS OF PAVEMENT WITH THE APPROPRIATE COMBINATION OF MATERIALS BASED ON THE SIZE OF THE EXCAVATION. THE MINIMUM SHALL CONSIST OF 6" OF ITEM 448 - ASPHALT CONCRETE. FINISHED CONCRETE PAVEMENT IS NOT PERMITTED. MATERIALS USED SHALL CONFORM TO THE REQUIREMENTS OF THE CURRENT CMSC.

IF MORE THAN 1/3 OF THE WIDTH OF AN ALLEY IS REMOVED, THE PAVEMENT SHALL BE REPLACED AS PER TYPE 1 AND THEN OVERLAYED OVER THE TOTAL WIDTH OF PAVEMENT AND LENGTH OF TRENCH.

NOTE 'H' : ITEM 912 - COMPACTED GRANULAR MATERIAL:
THIS METHOD OF BACKFILL CAN ONLY BE USED WITH FULL TIME CITY INSPECTION. AN INSPECTION FEE MUST BE POSTED WHEN THE PERMIT IS ISSUED.

NOTE 'I' : CONCRETE BASE OR PAVEMENT
IF PAVING REQUIREMENTS ALLOW FOR SUFFICIENT CURING TIME SO THAT FAST SETTING CONCRETE IS NOT NEEDED, STANDARD CONCRETE BASE OR PAVEMENT MAY BE PLACED AS PER THE CMSC. THIS OPTION MUST BE NOTED ON THE PERMIT APPLICATION AND APPROVED BY THE CITY OF COLUMBUS.

NOTE 'J' : THE TRENCH WIDTH FOR SMALL PIPES AND CONDUITS SHALL BE OF SUFFICIENT WIDTH TO ALLOW FOR THE PROPER PLACEMENT OF THE BACKFILL MATERIAL. THE PAVEMENT PORTION OF THE TRENCH SHALL BE A MINIMUM OF 2 FT. IN WIDTH. THIS IS TO ALLOW FOR THE PROPER COMPACTION OF THE ASPHALT PAVEMENT. IF THE TRENCH FOR PLACING CONDUIT IS NARROWER THAN 2 FT. THEN THE PAVEMENT PORTION SHALL BE CUT BACK TO PROVIDE THE 2 FT. MINIMUM FOR PAVING OPERATIONS.

PAVEMENT & UTILITY CUT REPAIR STANDARDS

CITY OF COLUMBUS, OHIO
DEPARTMENT OF PUBLIC SERVICE
DIVISION OF DESIGN AND CONSTRUCTION

STD DWG 1441
12/1/14
SHT 5 OF 7

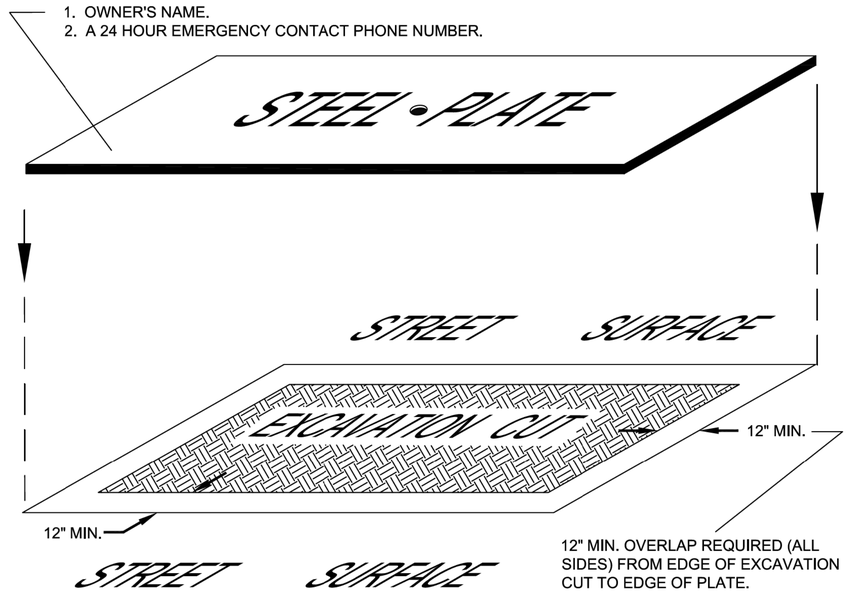

ALL STEEL PLATES MUST HAVE THE FOLLOWING INFORMATION CLEARLY AND LEGIBLY 'ETCHED' INTO THEIR TOP SURFACE:
1. OWNER'S NAME.
2. A 24 HOUR EMERGENCY CONTACT PHONE NUMBER.

MINIMUM THICKNESS OF STEEL PLATES	
SIZE OF PLATE	THICKNESS
4' x 4'	1/2"
4' x 6'	3/4"
LARGER	1"

NO STEEL PINS ARE PERMITTED.

SEE SHEET 7 FOR SIGNING REQUIREMENTS.

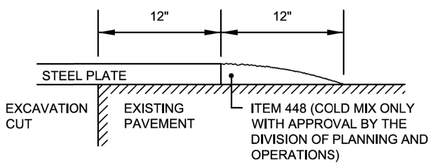

STEEL PLATE REQUIREMENTS

PAVEMENT & UTILITY CUT REPAIR STANDARDS

CITY OF COLUMBUS, OHIO
DEPARTMENT OF PUBLIC SERVICE
DIVISION OF DESIGN AND CONSTRUCTION

STD DWG 1441
12/1/14
SHT 6 OF 7

CALCULATED | CHECKED

MISC. DETAILS - PAVEMENT AND UTILITY CUT REPAIR

FRA-70-14.54

1218
2317

PLOT.CEL

ms consultants, inc.
msconsultants.com

www.msconsultants.com

Ohio DOT Workspace
70\71 East Interchange 2E

0 0.5" 1"

PCF: 60-06634_2E_Columbus
ODF: ohdot\V8i

Batchplot Spec: \\msconsultants.com\files\production\03\60\06634_2E\standards\plotdr\batchplt.spc
Pen Table: N:\03\60\06634_2E\standards\tables\V8i_ms_std_06634_2D_Plan View.tbl
Plot Driver: \\msconsultants.com\files\Standards\ustn\ohdot\v8i\ms\plotting\PDF.pltcfg

Model: Sheet
Printed: 6/19/2018 @ 9:11:21 AM View: FENCE_VIEW1
By: jdougas
File: N:\03\60\06634_2E\utilities\sheets\105220002 3C.dgn

34" x 22"

SIGNS ARE TO BE 36"x36" FOR RESIDENTIAL AND DOWNTOWN AREAS AND 48"x48" ON MULTI-LANE, HIGH SPEED (45 MPH OR GREATER) ROADWAYS.

SIGN COC-327 (R/L) IS REQUIRED AT ALL PLATE LOCATIONS. SIGN COC-328 IS REQUIRED WHEN POSTED SPEED IS 35 MPH OR GREATER.

SIGNS SHOULD BE PLACED IN ALL DIRECTIONS THAT ARE AFFECTED.

SIGNS SHOULD BE DUAL MOUNTED ON MULTI-LANE, ONE-WAY ROADWAYS.

ALL SIGNS SHALL BE MOUNTED IN ACCORANCE WITH THE OHIO MANUAL OF UNIFORM TRAFFIC CONTROL DEVICES (OMUTCD).

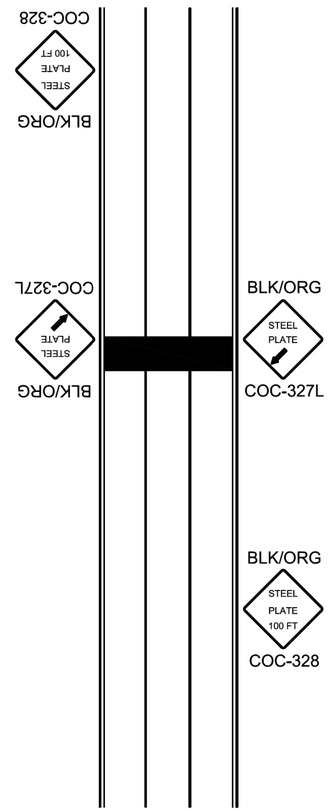

STEEL PLATE REQUIREMENTS

PAVEMENT & UTILITY CUT REPAIR STANDARDS

CITY OF COLUMBUS, OHIO
DEPARTMENT OF PUBLIC SERVICE
DIVISION OF DESIGN AND CONSTRUCTION

STD DWG
1441
12/1/14
SHT 7 OF 7

CALCULATED | CHECKED

MISC. DETAILS - PAVEMENT AND UTILITY CUT REPAIR

FRA-70-14.54

1219
2317

PLOT.CEL

ms consultants, inc.
rmsconsultants.com

www.rmsconsultants.com
70\71 East Interchange 2E
Ohio DOT Workspace

PCF: 60-06634_2E_Columbus
DF: ohdot\V8i

Batchlot Spec: \\rmsconsultants.com\files\production\03\60\06634_2E\standards\plotdrv\batchplt.spc
Pen Table: N:\03\60\06634_2E\standards\tables\V8i_ms_std_06634_2D_Plan View.tbl
Plot Driver: \\rmsconsultants.com\files\Standards\usetn\ohdot\v8i\rms\plotting\PDF.pltdrv

Model: Sheet
Printed: 6/19/2018 @ 9:11:29 AM
File: N:\03\60\06634_2E\utilities\sheets\1053220049.dgn
View: FENCE_VIEW1
By: jdouglas

34" x 22"

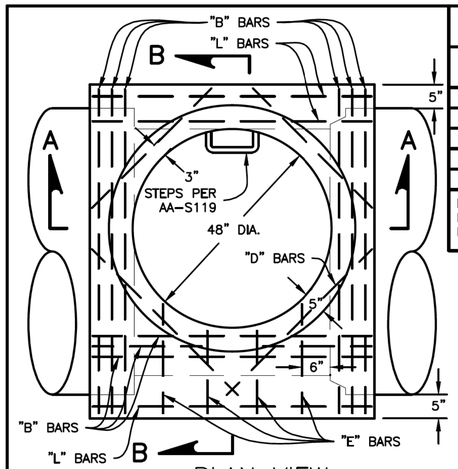

PLAN VIEW

REINFORCING STEEL LIST

BAR	SPACING	BAR SIZES FOR SEWERS		
		48" ≈ 60"	66" ≈ 78"	84" ≈ 96"
A	12" ON CENTER BOTH WAYS	#5	#6	#7
B	3" ON CENTER BOTH WAYS			
L	AS SHOWN			
D	AS SHOWN	#5	#5	#5
E	12" ON CENTER			

INCLUDED FOR ESTIMATING PURPOSES ONLY. THE COST OF FURNISHING AND PLACING ALL REINFORCEMENT STEEL SHALL BE INCLUDED IN ITEM 604 FOR PAYMENT.

NOTES:

1. STEPS SHALL COMPLY WITH THE REQUIREMENTS SET FORTH ON CMS 711.31 AND STANDARD DRAWING AA–S119.
2. t = WALL THICKNESS OF INTERCEPTING SEWER.
3. ALL REINFORCING STEEL SHALL MEET CMS 709.2 SPECIFICATIONS.
4. 2" MINIMUM COVER ON ALL REINFORCEMENT STEEL.
5. NO STEPS TO BE INSTALLED BELOW PIPE SPRING LINE.
6. PRECAST MANHOLES SHALL BE IN ACCORDANCE WITH ASTM C478.

FOR SEWERS 48" DIAMETER AND OVER

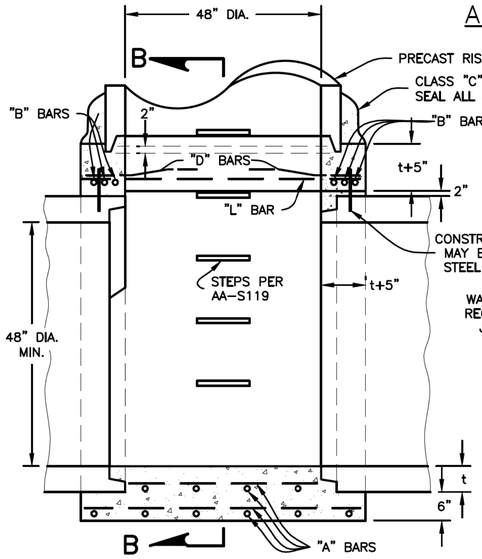

SECTION A–A

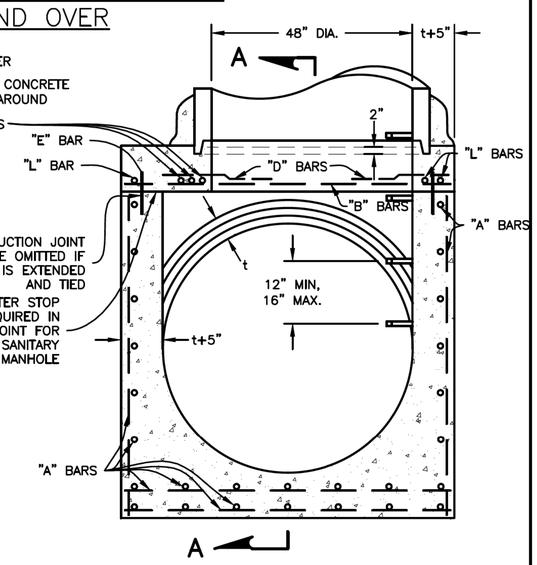

SECTION B–B

CITY OF COLUMBUS, OHIO DEPARTMENT OF PUBLIC UTILITIES DIVISION OF SEWERAGE & DRAINAGE	TYPE "E" MANHOLE	STANDARD DRAWING AA–S104
SSES MANAGER		REVISED 8/8/14
		PAGE 1 / 2

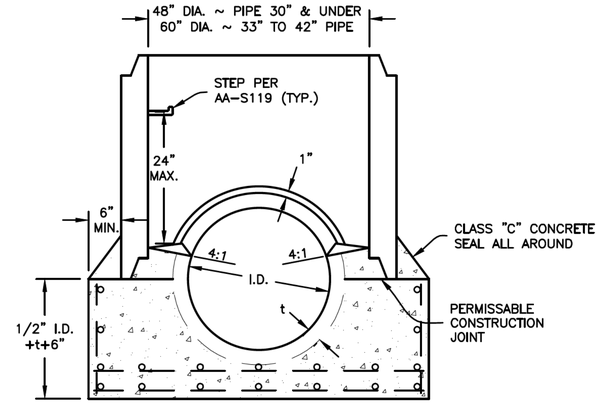

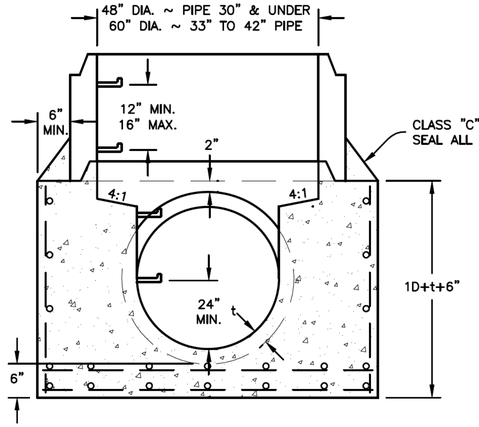

FOR SEWERS 42" DIA. & UNDER

NOTES:

1. CONCRETE FOR THE BASES SHALL BE CLASS "C" OR MEET THE REQUIREMENTS OF CMS 706.13. THE BASES SHALL BE PRECAST OR CAST–IN–PLACE.
2. PRECAST MANHOLES SHALL BE IN ACCORDANCE WITH ASTM C478. PRECAST BASES ON SEWERS 42" AND UNDER SHALL HAVE SUFFICIENT STEEL REINFORCEMENT TO PERMIT SHIPPING AND PLACEMENT WITHOUT DAMAGE TO THE BASE.
3. STEPS SHALL COMPLY WITH REQUIREMENTS SET FORTH ON CMS 711.31 AND STANDARD DRAWING AA–S119.
4. t = WALL THICKNESS OF INTERCEPTING SEWER.
4. ALL REINFORCING STEEL SHALL MEET CMS 709.2 SPECIFICATIONS.
5. 2" MINIMUM COVER ON ALL REINFORCEMENT STEEL.
6. NO STEPS TO BE INSTALLED BELOW PIPE SPRING LINE.

CITY OF COLUMBUS, OHIO DEPARTMENT OF PUBLIC UTILITIES DIVISION OF SEWERAGE & DRAINAGE	TYPE "E" MANHOLE	STANDARD DRAWING AA–S104
SSES MANAGER		REVISED 8/8/14
		PAGE 2 / 2

CALCULATED | CHECKED

MISC. DETAILS - TYPE E MANHOLE

FRA-70-14.54

1220
2317

ms consultants, inc.

PLOT.CEL
ms consultants, inc.
msconsultants.com
www.msconsultants.com
Ohio DOT Workspace
70\71 East Interchange 2E
PCF: 60-06634_2E_Columbus
OPF: ohdot\V8i
Batchplot Spec: \\msconsultants.com\Files\production\03\60\06634_2E\standards\plotdrv\batchplt.spc
Pen Table: N:\03\60\06634_2E\standards\tables\V8i_ms_std_06634_2D_Plan View.tbl
Plot Driver: \\msconsultants.com\Files\Standards\usetn\ohdot\v8i\ms\plotting\PDF.pltcfg
Model: Sheet
Printed: 6/19/2018 @ 9:11:43 AM
File: N:\03\60\06634_2E\utilities\sheets\05322U0050.dgn
View: FENCE_VIEW1
By: jdouglas
34" x 22"

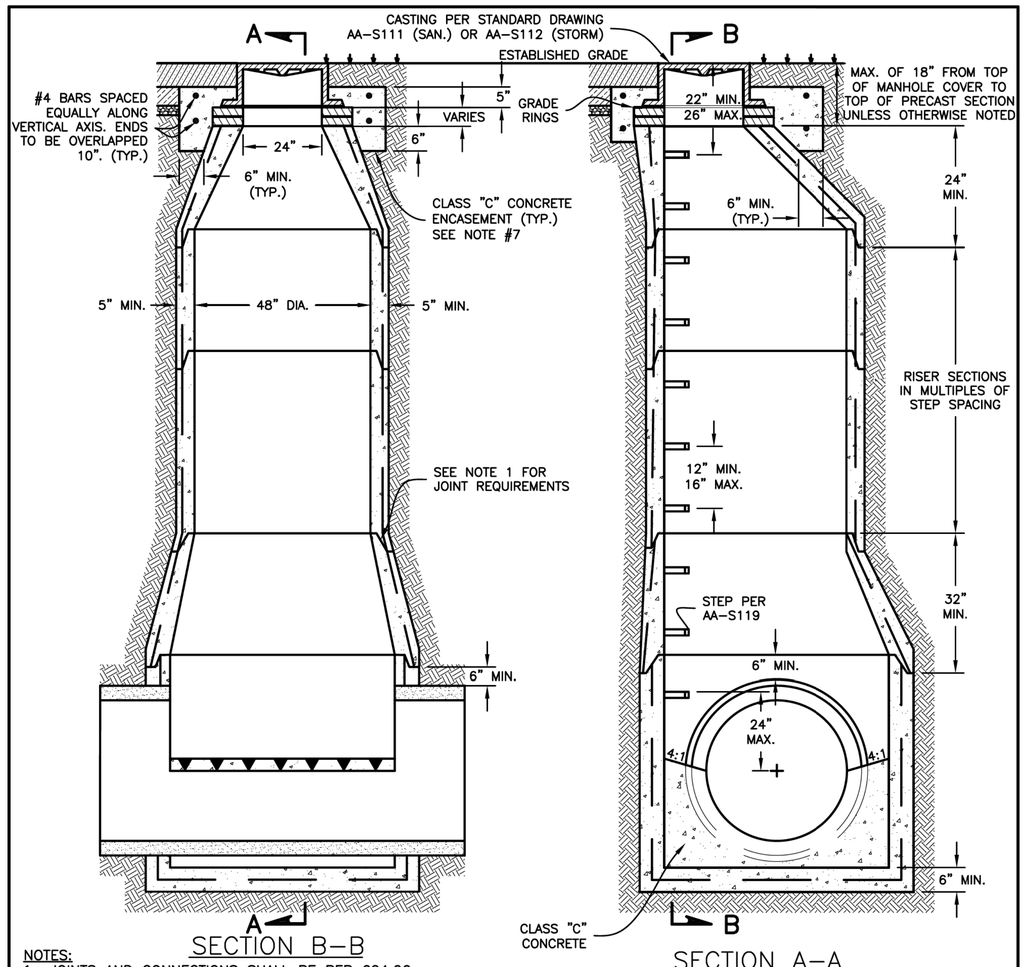

SECTION B–B

SECTION A–A

NOTES:

1. JOINTS AND CONNECTIONS SHALL BE PER 604.06.
2. PRECAST MANHOLES SHALL BE N ACCORDANCE WITH ASTM C–478.
3. PRECAST WALLS SHALL HAVE A MIN. THICKNESS OF 5" AND BE SUFFICIENTLY REINFORCED TO PERMIT SHIPPING AND HANDLING WITHOUT DAMAGE.
4. FINISH MANHOLE CHANNEL ACCORDING TO STANDARD DRAWING AA–S117.
5. SEE TABLE FOR MANHOLE BASE DIAMETER.
6. MANHOLES MUST BE SET ON FOUNDATION OF CRUSHED #57 LIMESTONE, 6" MIN. THICKNESS.
7. ONLY SANITARY MANHOLES IN IMPERVIOUS AREAS SHALL REQUIRE A CONCRETE COLLAR, UNLESS OTHERWISE SPECIFIED. SANITARY MANHOLES LOCATED WITHIN PERVIOUS AREAS SHALL REQUIRE A FLEXIBLE CHIMNEY SEAL.

MANHOLE BASE I.D. (INCHES)	MAXIMUM PIPE O.D.	
	STRAIGHT PIPE (INCHES)	RIGHT ANGLE (INCHES)
48	31	25
60	42	32
72	51	38
84	–	44
96	–	50

CITY OF COLUMBUS, OHIO
DEPARTMENT OF PUBLIC UTILITIES
DIVISION OF SEWERAGE & DRAINAGE

SSES MANAGER

TYPE "C" MANHOLE

STANDARD DRAWING
AA–S102
REVISED 12/6/13
PAGE 1 / 1

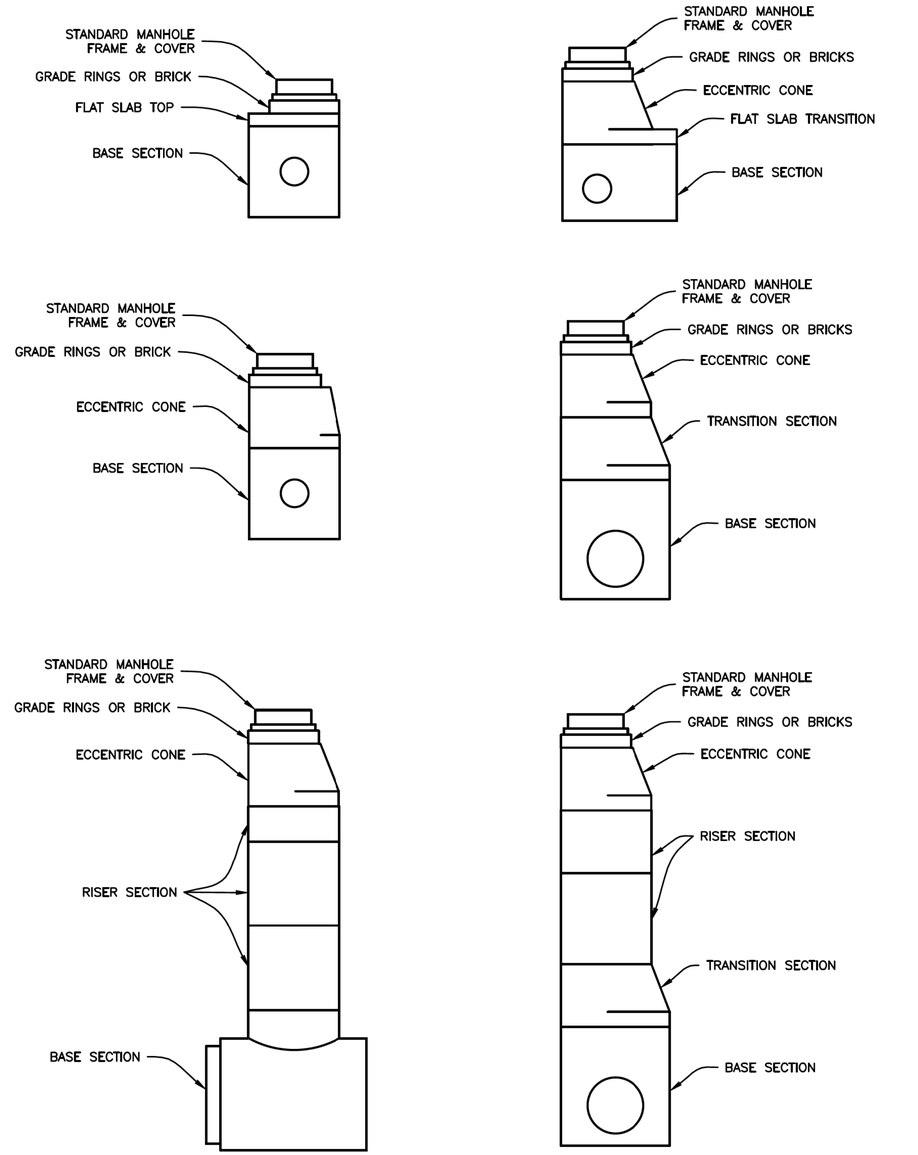

CITY OF COLUMBUS, OHIO
DEPARTMENT OF PUBLIC UTILITIES
DIVISION OF SEWERAGE & DRAINAGE

SSES MANAGER

TYPICAL ASSEMBLY COMBINATIONS FOR PRECAST MANHOLES

STANDARD DRAWING
AA–S106
REVISED 7/9/12
PAGE 1 / 1

CALCULATED | CHECKED

MISC. DETAILS

FRA-70-14.54

1221
2317

ms consultants, inc.

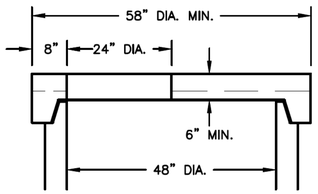

FLAT SLAB TOP
(48" RISERS)

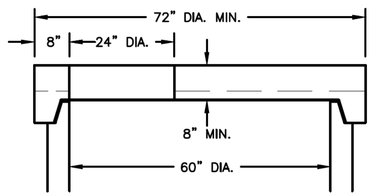

FLAT SLAB TOP
(60" RISERS)

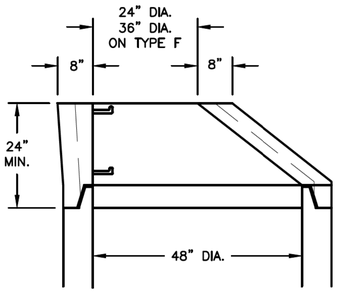

ECCENTRIC CONE TOP
(48" RISERS)

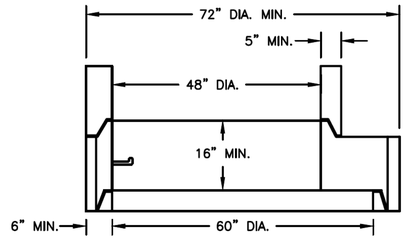

FLAT SLAB TRANSITION
(60" TO 48")

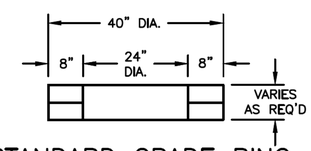

STANDARD GRADE RING

NOTE:
ALL PRE-CAST MANHOLE SECTIONS SHALL BE IN ACCORDANCE WITH ASTM C478.

CITY OF COLUMBUS, OHIO DEPARTMENT OF PUBLIC UTILITIES DIVISION OF SEWERAGE & DRAINAGE	MISCELLANEOUS ITEMS PRECAST MANHOLES	STANDARD DRAWING AA–S107
SSES MANAGER		REVISED 7/9/12
		PAGE 1/1

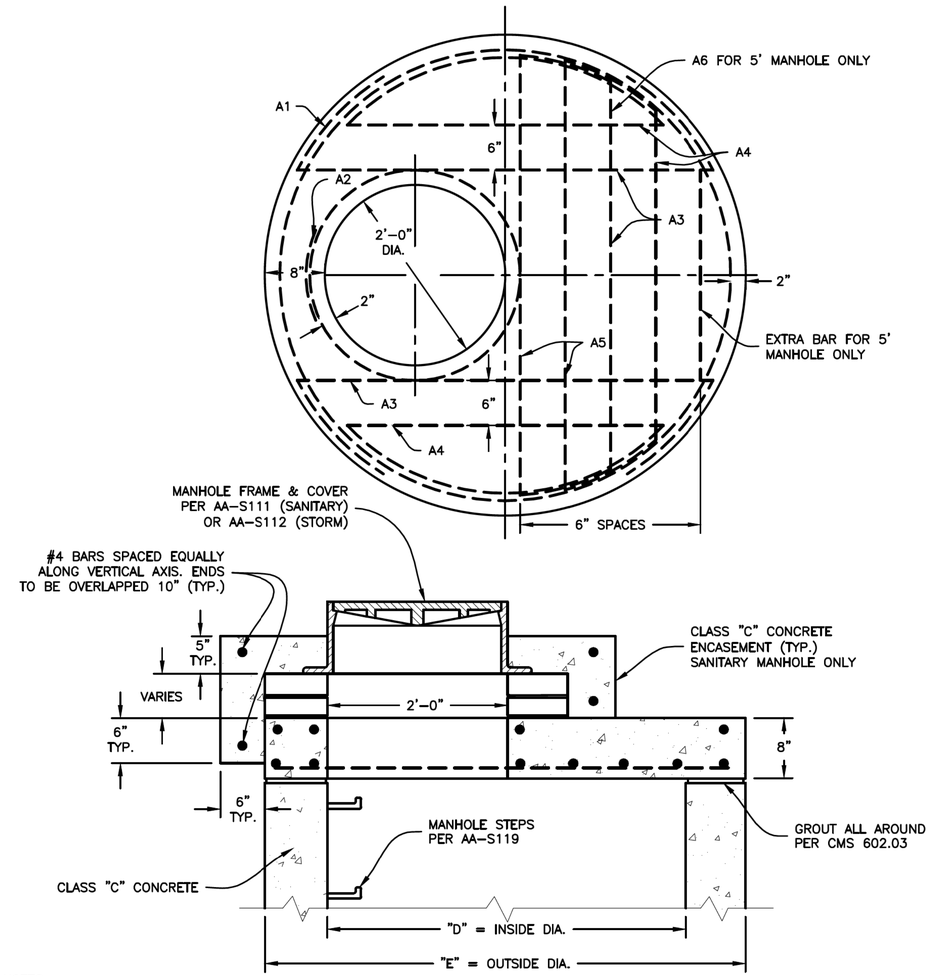

NOTES:

1. 2" MIN. COVER ON ALL REINFORCEMENT STEEL.
2. ALL REINFORCING STEEL SHALL MEET CMS 709.2 SPECIFICATIONS.

DIMENSIONS AND QUANTITIES FOR TOP SLAB

M.H. DIA. "D"	M.H. DIA. "E"	#4 STEEL REINFORCEMENT BARS														WEIGHT STEEL LBS.	APPROXIMATE CONCRETE VOLUME CU. YD.
		A1			A2			A3		A4		A5		A6			
		NO.	LENGTH	RADIUS	NO.	LENGTH	RADIUS	NO.	LENGTH	NO.	LENGTH	NO.	LENGTH	NO.	LENGTH		
4'–0"	4'–10"	2	17'–5"	2'–3"	2	9'–0"	1'–2"	3	5'–11"	3	5'–3"	2	6'–6"			66	0.38
5'–0"	6'–0"	2	20'–6"	2'–10"	2	9'–0"	1'–2"	3	7'–2"	3	6'–8"	2	7'–8"	1	7'–6"	82	0.63

CITY OF COLUMBUS, OHIO DEPARTMENT OF PUBLIC UTILITIES DIVISION OF SEWERAGE & DRAINAGE	CAST–IN–PLACE CONCRETE TOP SLAB FOR SHALLOW MANHOLES	STANDARD DRAWING AA–S108
SSES MANAGER		REVISED 7/9/12
		PAGE 1/1

CALCULATED
CHECKED

MISC. DETAILS

FRA-70-14.54

1222
2317

PLOT.CEL
ms consultants, inc.
msconsultants.com
Ohio DOT Workspace
70\71 East Interchange 2E
www.msconsultants.com
Batchplot Spec: \\msconsultants.com\files\production\03\60\06634_2E\standards\plotdrv\batchplt.spc
Pen Table: N:\03\60\06634_2E\standards\tables\V8i_ms_std_06634_2D_Plan View.tbl
Plot Driver: \\msconsultants.com\files\Standards\ustn\ohdot\v8i\ms\plotting\PDF.pltcfg
34" x 22"
Model: Sheet
Printed: 6/19/2018 @ 9:11:57 AM
File: N:\03\60\06634_2E\utilities\sheets\105322UD051.dgn
View: FENCE_VIEW1
By: jdouglas

PLOT.CEL

ms consultants, inc.
msconsultants.com

Ohio DOT Workspace
70\71 East Interchange 2E
www.msconsultants.com

0 1" 0.5"

DGF: ohdot1V8i
PCF: 60-06634_2E_Columbus

Batchplot Spec: \\msconsultants.com\Files\production\03\60\06634_2E\standards\plotdrv\batchplt.spc
Pen Table: N:\03\60\06634_2E\standards\tables\V8i_ms_std_06634_2D_Plan View.tbl
Plot Driver: \\msconsultants.com\Files\Standards\usetn\ohdot1\v8i\ms\plotting\PDF.pltcfg

Model: Sheet
Printed: 6/19/2018 @ 9:12:11 AM
File: N:\03\60\06634_2E\utilities\sheets\105322U0052.dgn

View: FENCE_VIEW1
By: jdougas

34" x 22"

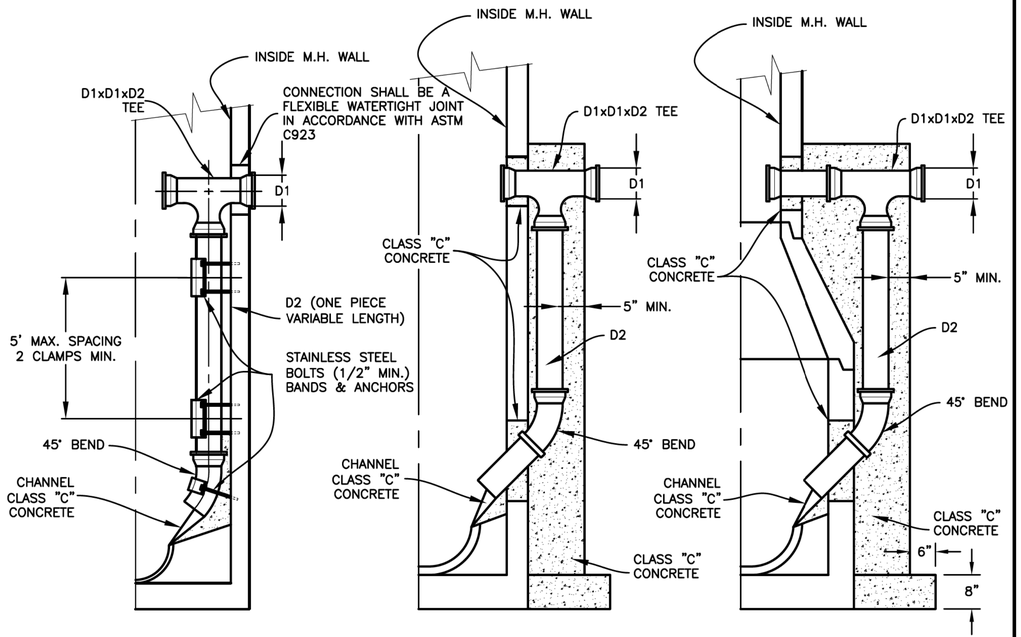

INSIDE DROP
(HALF SECTION)

OUTSIDE DROP
(HALF SECTION)

OUTSIDE DROP
(HALF SECTION)

NOTES:

1. DROP IS REQUIRED WHEN INVERT DIFFERENTIAL IS 24 INCHES OR GREATER.
2. HEIGHT OF DROP PIPE IS TO BE SHOWN ON THE PLANS OR WILL BE DETERMINED AT THE TIME OF CONSTRUCTION.
3. ALL WORK AND MATERIALS REQUIRED TO CONSTRUCT THE INSIDE OR OUTSIDE DROP SHALL BE INCLUDED FOR PAYMENT UNDER ITEM 604, OR ITEM 901.
4. UNLESS OTHERWISE REQUIRED BY THE PLANS AN OUTSIDE DROP WILL BE CONSTRUCTED ON NEW MANHOLES.
5. MATERIALS FOR THE TEE, DROP PIPE AND BEND SHALL BE OF ONE TYPE AND BE ONE OF THE FOLLOWING; INSIDE DROP: CAST-IRON OR PVC. OUTSIDE DROP: CAST IRON, VCP, OR PVC.
6. OUTSIDE DROP PIPES REQUIRE A 5" THICK (MINIMUM) CLASS "C" CONCRETE ENCASEMENT ON THREE SIDES OF PIPE AND SHALL BE TIED TO MANHOLE WALL WITH 5/8" STAINLESS STEEL-"U" RODS x 5" LONG @ 12".
7. INSIDE DROP MAY BE USED ON NEW CONSTRUCTION PROVIDED THAT 60" BASE AND RISER SECTIONS ARE USED.

PIPE DIAMETER	
D1	D2
8"	8"
10"	8"
12"	8"
15"	10"
18"	10"
21"	12"
24"	12"

CITY OF COLUMBUS, OHIO
DEPARTMENT OF PUBLIC UTILITIES
DIVISION OF SEWERAGE & DRAINAGE

SSES MANAGER

INSIDE DROP & OUTSIDE DROP PIPE FOR MANHOLES

STANDARD DRAWING
AA-S110

REVISED 9/20/12

PAGE 1 / 1

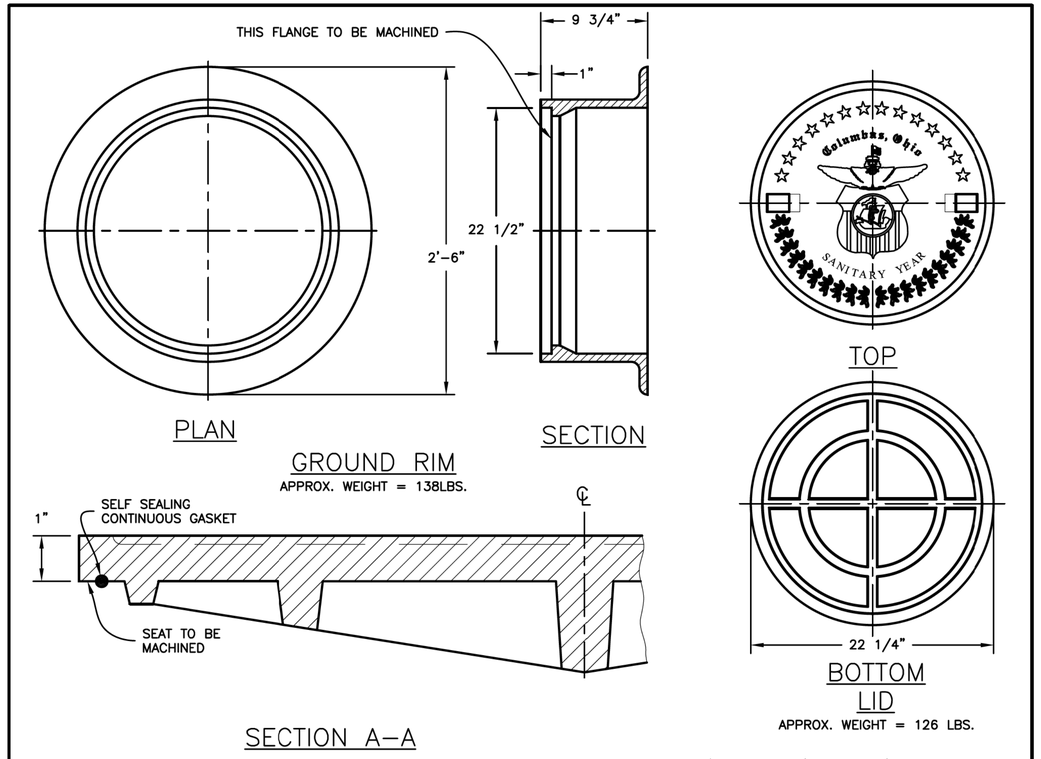

PLAN

SECTION

GROUND RIM
APPROX. WEIGHT = 138LBS.

SECTION A-A

TOP

22 1/4"

BOTTOM

LID
APPROX. WEIGHT = 126 LBS.

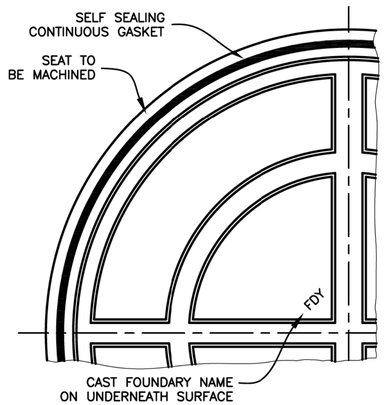

BOTTOM

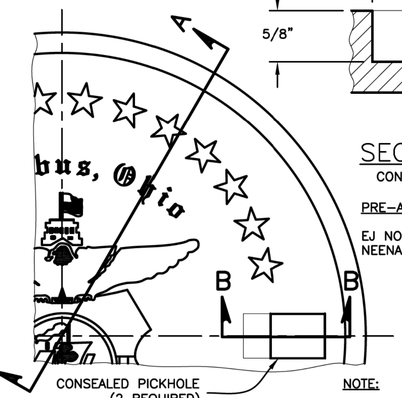

TOP

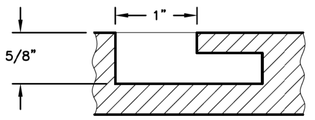

SECTION B-B
CONCEALED PICKHOLE

PRE-APPROVED CASTINGS:

EJ NO. - 1660A3GS, 1661Z1
NEENAH NO. - 1762 WITH T-SEAL

NOTE:

FRAMES, GRATES, AND COVERS SHALL MEET THE REQUIREMENTS OF 604.02 AND AASHTO M306

CITY OF COLUMBUS, OHIO
DEPARTMENT OF PUBLIC UTILITIES
DIVISION OF SEWERAGE & DRAINAGE

SSES MANAGER

STANDARD DIMENSIONS FOR MANHOLE FRAME & COVER CASTING (SANITARY SEWERS)

STANDARD DRAWING
AA-S111

REVISED 12/6/13

PAGE 1 / 1

CALCULATED

CHECKED

MISC. DETAILS

FRA-70-14.54

1223
2317

ms consultants, inc.

PLOT.CEL
ms consultants, inc.
msconsultants.com
www.msconsultants.com
Ohio DOT Workspace
70\71 East Interchange 2E
ODF: ohdot\V8i
PCF: 60-06634_2E_Columbus
Batchplot Spec: \\msconsultants.com\files\production\03\60\06634_2E\standards\plotdrv\batchplt.spc
Pen Table: N:\03\60\06634_2E\standards\tables\V8i_ms_std_06634_2D_Plan View.tbl
Plot Driver: \\msconsultants.com\files\Standards\ustn\ohdot\v8i\ms\plotting\PDF.pltdrv
Model: Sheet
Printed: 6/19/2018 @ 9:12:24 AM
File: N:\03\60\06634_2E\utilities\sheets\1053220053.dgn
View: FENCE_VIEW1
By: jdougos
34" x 22"

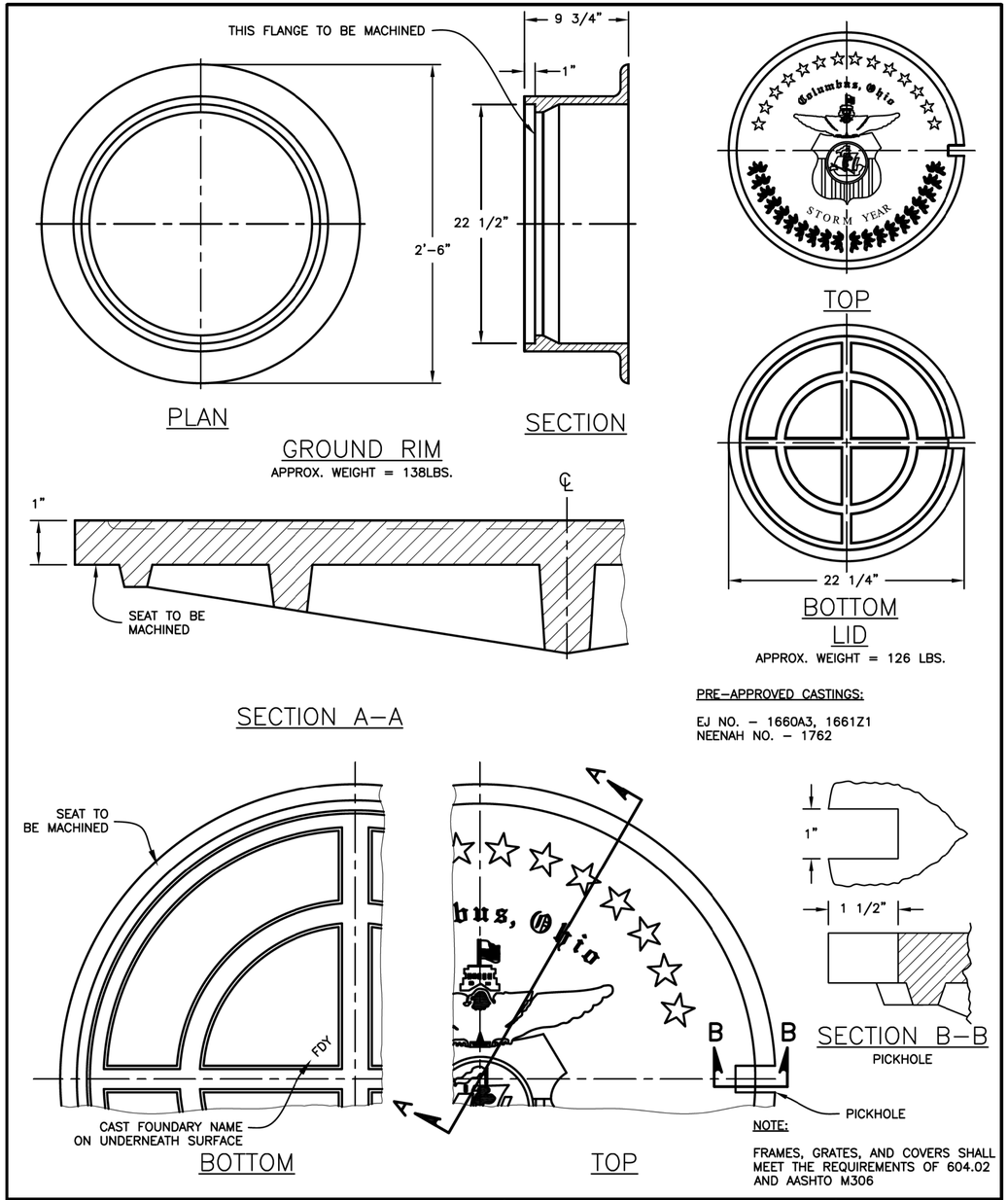

CITY OF COLUMBUS, OHIO DEPARTMENT OF PUBLIC UTILITIES DIVISION OF SEWERAGE & DRAINAGE	STANDARD DIMENSIONS FOR MANHOLE FRAME & COVER CASTING (STORM SEWERS)	STANDARD DRAWING AA-S112
		REVISED 12/6/13
SSES MANAGER		PAGE 1 / 1

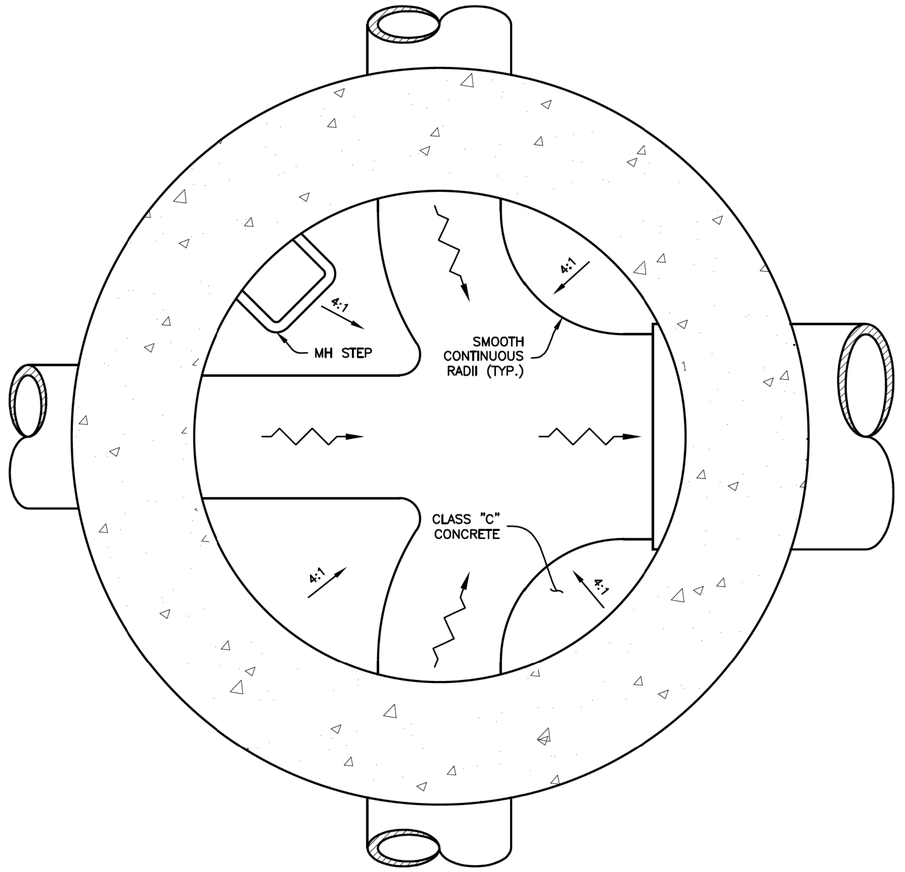

SECTION SHOWING METHOD OF TURNING SIDE DRAINS

CITY OF COLUMBUS, OHIO DEPARTMENT OF PUBLIC UTILITIES DIVISION OF SEWERAGE & DRAINAGE	PRECAST MANHOLE BASE CHANNEL DETAIL	STANDARD DRAWING AA-S117
		REVISED 7/9/12
SSES MANAGER		PAGE 1 / 1

CALCULATED | CHECKED

MISC. DETAILS

FRA-70-14.54

1224
2317

ms consultants, inc.

PLOT.CEL
ms consultants, inc.
msconsultants.com
www.msconsultants.com
Ohio DOT Workspace
70\71 East Interchange 2E
PCF: ohdot\V8i
PCF: 60-06634_2E_Columbus
Batchplot Spec: \\msconsultants.com\Files\production\03\60\06634_2E\standards\plotdrv\batchplt.spc
Pen Table: N:\03\60\06634_2E\standards\tables\V8i_ms_std_06634_2D_Plan View.tbl
Plot Driver: \\msconsultants.com\Files\Standards\astm\ohdot\v8i\ms\plotting\PDF.pltcfg
Model: Sheet
Printed: 6/19/2018 @ 9:12:38 AM
File: N:\03\60\06634_2E\utilities\sheets\V8i\05322000S4.dgn
View: FENCE_VIEW1
By: jdouglas
34" x 22"

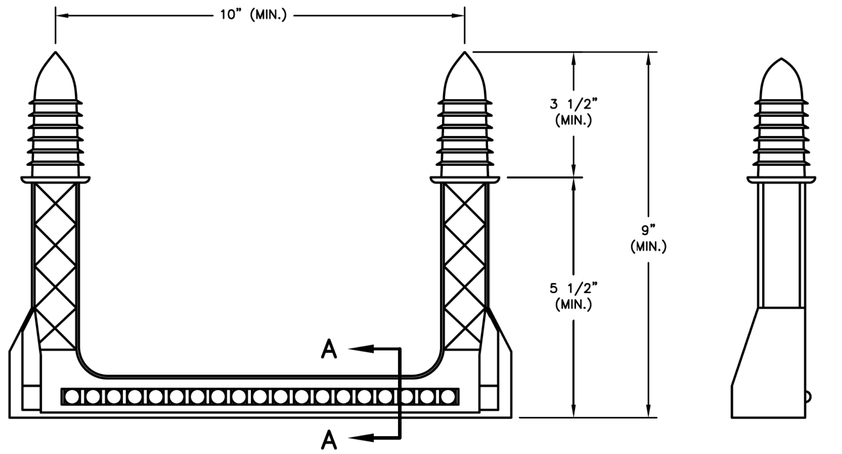

TOP VIEW

SIDE VIEW

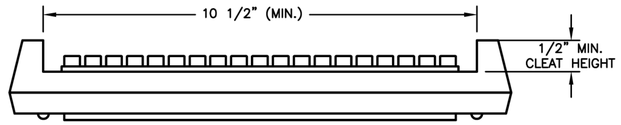

FRONT VIEW

NOTES:

1. STEPS SHALL MEET THE REQUIREMENTS OF ASTM C478, AND SHALL BE INSTALLED WITH A UNIFORM VERTICAL SPACING OF 12" TO 16"
2. STEPS INSTALLED IN EXISTING STRUCTURES SHALL BE SET IN A QUICK SETTING NON-SHRINK EPOXY.
3. STEPS SHALL CONFORM TO MATERIAL REQUIREMENTS OF CMS 711.31. ALL STEPS SHALL HAVE A DEPRESSED TREAD OR 1/2" MINIMUM CLEAT HEIGHT AT THE ENDS.
4. THE ENGINEER MAY REQUIRE THE CONTRACTOR TO TEST LOAD A MAXIMUM OF ONE STEP PER STRUCTURE PER ASTM C478. IF THE SELECTED STEP FAILS THE ASTM TEST, THE REMAINING STEPS IN THAT STRUCTURE SHALL ALSO BE TESTED. ALL STEPS NOT PASSING THE ASTM TEST SHALL BE REMOVED. ALL NEW STEPS SHALL BE TESTED PER ASTM C478. THE COST OF TESTING SHALL BE INCLUDED IN THE UNIT PRICE BID FOR SAID STRUCTURE.

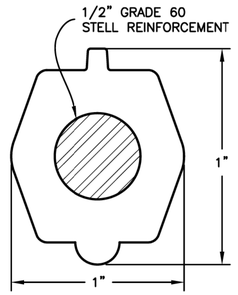

SECTION A-A

CITY OF COLUMBUS, OHIO DEPARTMENT OF PUBLIC UTILITIES DIVISION OF SEWERAGE & DRAINAGE	MANHOLE STEP	STANDARD DRAWING AA-S119
		REVISED 8/8/14
SSES MANAGER		PAGE 1 / 1

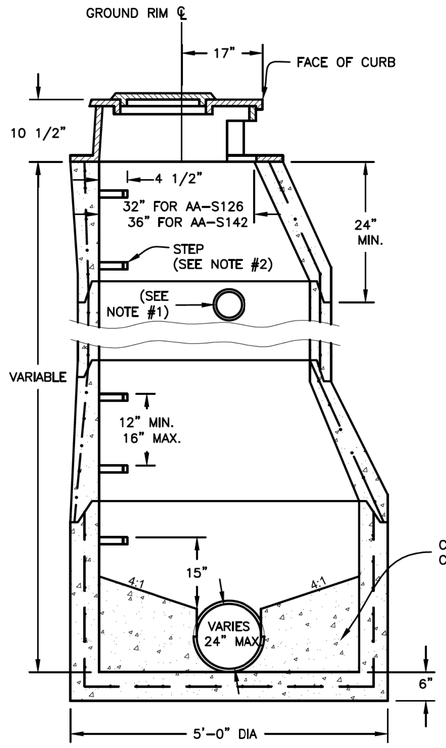

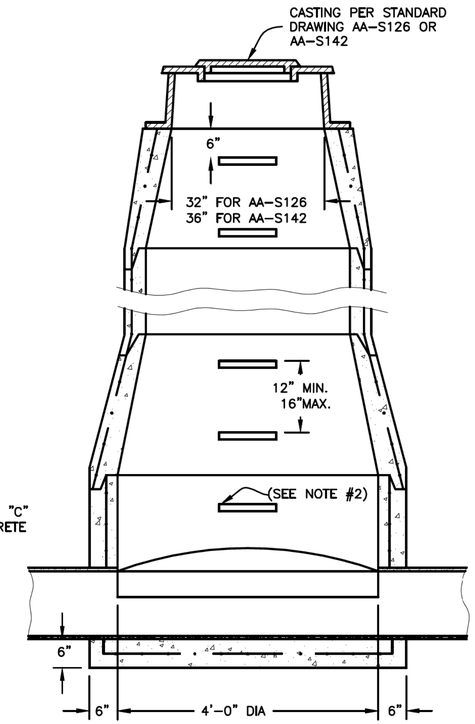

NOTES:

1. PLACE STANDARD 4" CURB DRAIN STUBS 30" BELOW THE TOP OF THE CURB OR AS DIRECTED.
2. INSTALL STANDARD STEPS PER AA-S119.
3. PRE-CAST WALLS SHALL HAVE A 5" MIN. THICKNESS & BE SUFFICIENTLY REINFORCED TO PERMIT SHIPPING & HANDLING WITHOUT DAMAGE.
4. MANHOLE SHALL BE IN ACCORDANCE WITH ASTM C478.

CITY OF COLUMBUS, OHIO DEPARTMENT OF PUBLIC UTILITIES DIVISION OF SEWERAGE & DRAINAGE	CURB INLET MANHOLE	STANDARD DRAWING AA-S121
		REVISED 7/9/12
SSES MANAGER		PAGE 1 / 1

CALCULATED | CHECKED

MISC. DETAILS

FRA-70-14.54

1225
2317

ms consultants, inc.

PLOT.CEL
ms consultants, inc.
msconsultants.com
www.msconsultants.com
Ohio DOT Workspace
70\71 East Interchange 2E
PCF: 60-06634_2E_Columbus
DF: ohdot\V8i
Batchplot Spec: \\msconsultants.com\files\production\03\60\06634_2E\standards\plotdrv\batchplt.spc
Pen Table: N:\03\60\06634_2E\standards\tables\V8i_ms_std_06634_2D_Plan View.tbl
Plot Driver: \\msconsultants.com\files\Standards\ustn\ohdot\v8i\ms\plotting\PDF.pltcfg
Model: Sheet
Printed: 6/19/2018 @ 9:12:52 AM
File: N:\03\60\06634_2E\utilities\sheets\V8\053220055.dgn
View: FENCE_VIEW1
By: jdouglas
34" x 22"

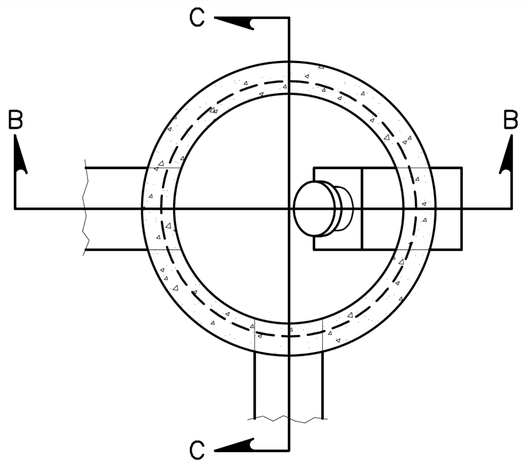

SECTION PLAN A–A

NOTES:

1. CURB INLET CASTING PER STANDARD DRAWING AA–S126, OR AA–S142.
2. PLACE STANDARD 4" CURB DRAIN STUBS 30" BELOW THE TOP OF THE CURB OR AS DIRECTED.
3. INSTALL STANDARD STEPS PER AA–S119.
4. MANHOLE SHALL BE IN ACCORDANCE WITH ASTM C478.
5. PRECAST WALLS SHALL HAVE A 5" MIN. THICKNESS AND BE SUFFICIENTLY REINFORCED TO PERMIT SHIPPING AND HANDLING WITHOUT DAMAGE.

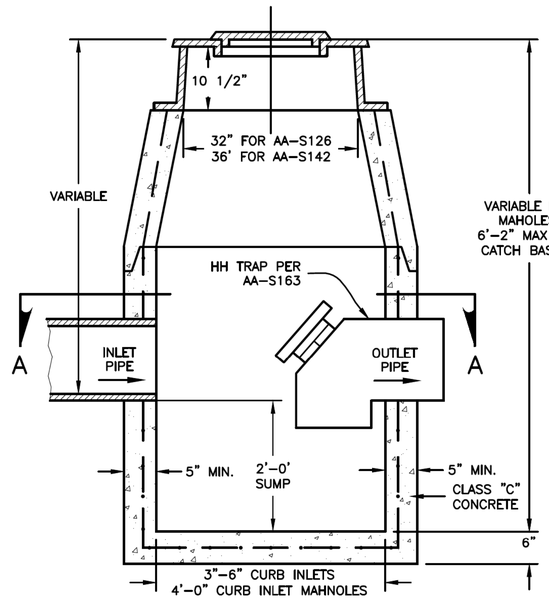

SECTION PLAN B–B

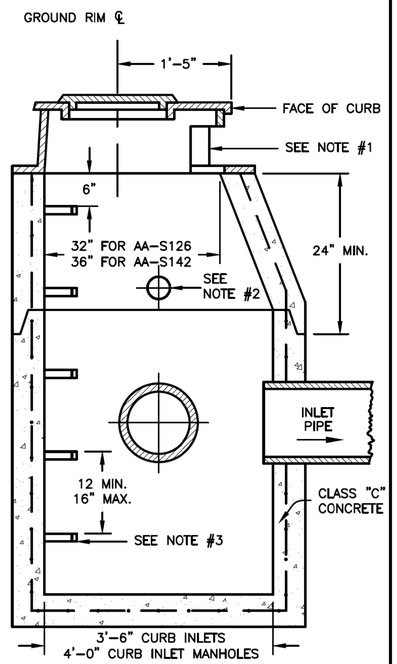

SECTION PLAN C–C

CITY OF COLUMBUS, OHIO DEPARTMENT OF PUBLIC UTILITIES DIVISION OF SEWERAGE & DRAINAGE SSES MANAGER	CURB INLET & CURB INLET MANHOLE WITH H–H TRAP (COMBINED SEWERS)	STANDARD DRAWING AA–S122 REVISED 7/9/12 PAGE 1/1

CALCULATED | CHECKED

MISC. DETAILS

FRA-70-14.54

1226
2317

ms consultants, inc.

PLOT.CEL
ms consultants, inc.
msconsultants.com
Batchplot Spec: \\msconsultants.com\Files\production\03\60\06634_2E\standards\plotdrv\batchplt.spc
Pen Table: N:\03\60\06634_2E\standards\tables\V8i_ms_std_06634_2D_Plan View.tbl
Plot Driver: \\msconsultants.com\Files\Standards\usetn\ohdot\v8i\ms\plotting\PDF.pltcfg
Model: Sheet View: FENCE_VIEW1
Printed: 6/19/2018 @ 9:12:59 AM By: jdoughas
File: N:\03\60\06634_2E\utilities\sheets\V8\53220055A.dgn
34" x 22"
Ohio DOT Workspace
70\71 East Interchange 2E
www.msconsultants.com
1" 0.5" 0
DGN: ohdot\V8i
PCF: 60-06634_2E_Columbus

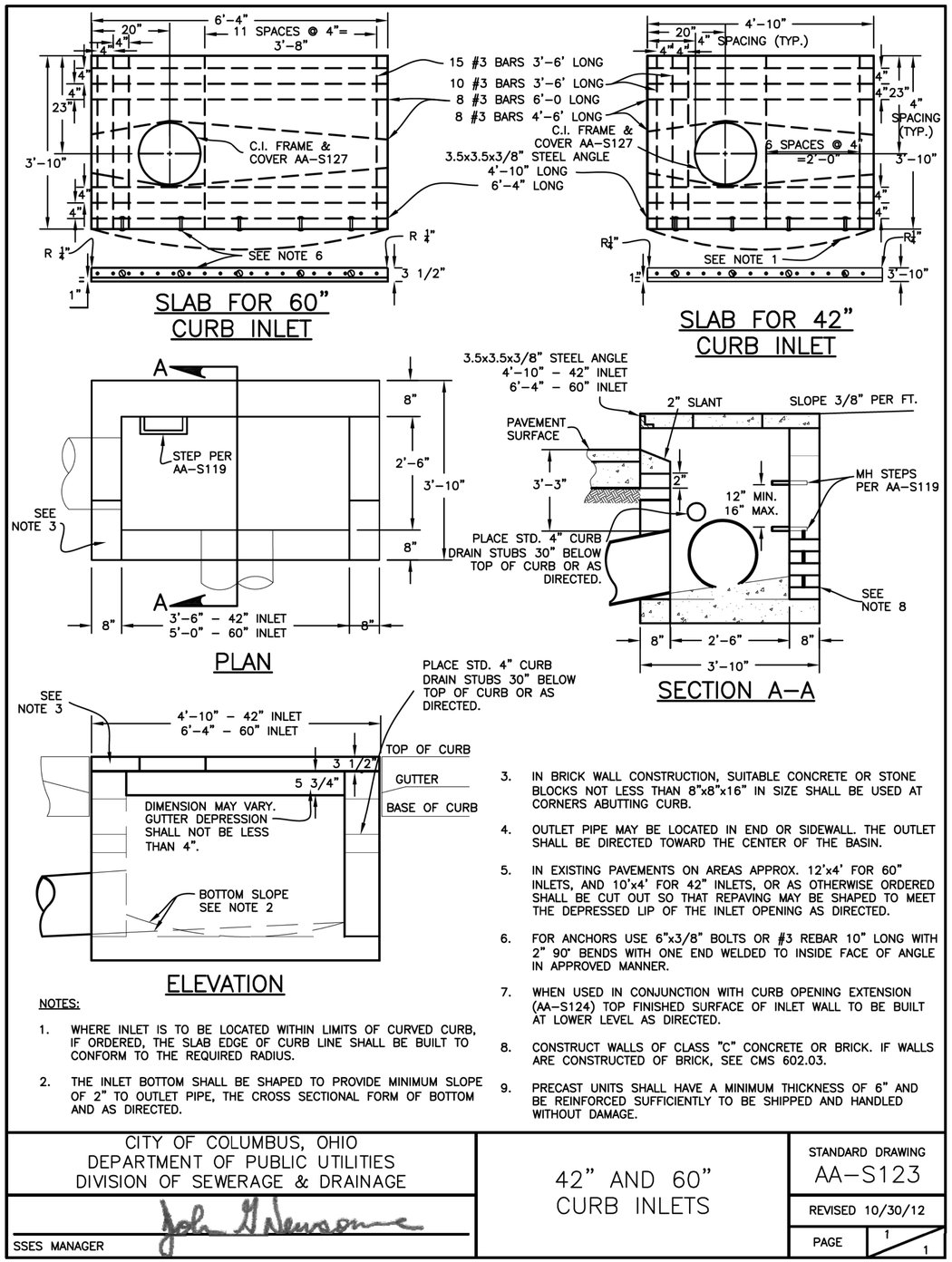

NOTES:

1. WHERE INLET IS TO BE LOCATED WITHIN LIMITS OF CURVED CURB, IF ORDERED, THE SLAB EDGE OF CURB LINE SHALL BE BUILT TO CONFORM TO THE REQUIRED RADIUS.
2. THE INLET BOTTOM SHALL BE SHAPED TO PROVIDE MINIMUM SLOPE OF 2" TO OUTLET PIPE, THE CROSS SECTIONAL FORM OF BOTTOM AND AS DIRECTED.
3. IN BRICK WALL CONSTRUCTION, SUITABLE CONCRETE OR STONE BLOCKS NOT LESS THAN 8"x8"x16" IN SIZE SHALL BE USED AT CORNERS ABUTTING CURB.
4. OUTLET PIPE MAY BE LOCATED IN END OR SIDEWALL. THE OUTLET SHALL BE DIRECTED TOWARD THE CENTER OF THE BASIN.
5. IN EXISTING PAVEMENTS ON AREAS APPROX. 12'x4' FOR 60" INLETS, AND 10'x4' FOR 42" INLETS, OR AS OTHERWISE ORDERED SHALL BE CUT OUT SO THAT REPAVING MAY BE SHAPED TO MEET THE DEPRESSED LIP OF THE INLET OPENING AS DIRECTED.
6. FOR ANCHORS USE 6"x3/8" BOLTS OR #3 REBAR 10" LONG WITH 2" 90° BENDS WITH ONE END WELDED TO INSIDE FACE OF ANGLE IN APPROVED MANNER.
7. WHEN USED IN CONJUNCTION WITH CURB OPENING EXTENSION (AA-S124) TOP FINISHED SURFACE OF INLET WALL TO BE BUILT AT LOWER LEVEL AS DIRECTED.
8. CONSTRUCT WALLS OF CLASS "C" CONCRETE OR BRICK. IF WALLS ARE CONSTRUCTED OF BRICK, SEE CMS 602.03.
9. PRECAST UNITS SHALL HAVE A MINIMUM THICKNESS OF 6" AND BE REINFORCED SUFFICIENTLY TO BE SHIPPED AND HANDLED WITHOUT DAMAGE.

CITY OF COLUMBUS, OHIO
DEPARTMENT OF PUBLIC UTILITIES
DIVISION OF SEWERAGE & DRAINAGE

SSES MANAGER

42" AND 60" CURB INLETS

STANDARD DRAWING
AA-S123

REVISED 10/30/12

PAGE 1 / 1

CALCULATED | CHECKED

MISC. DETAILS

FRA-70-14.54

1227
2317

ms consultants, inc.

PLOT.CEL

ms consultants, inc.
msconsultants.com

www.msconsultants.com
Ohio DOT Workspace
70\71 East Interchange 2E

0 0.5" 1"

PCF: 60-06634_2E_Columbus
ODF: ohdot\V8i

Batchplot Spec: \\msconsultants.com\files\production\03\60\06634_2E\standards\plotdrv\batchplt.spc
Pen Table: N:\03\60\06634_2E\standards\tables\V8i_ms_std_06634_2D_Plan View.tbl
Plot Driver: \\msconsultants.com\files\Standards\ustn\ohdot\v8i\ms\plotting\PDF.pltdrv

Model: Sheet View: FENCE_VIEW1
Printed: 6/19/2018 @ 9:13:07 AM By: jdouglas
File: N:\03\60\06634_2E\utilities\sheets\05222U0056.dgn

34" x 22"

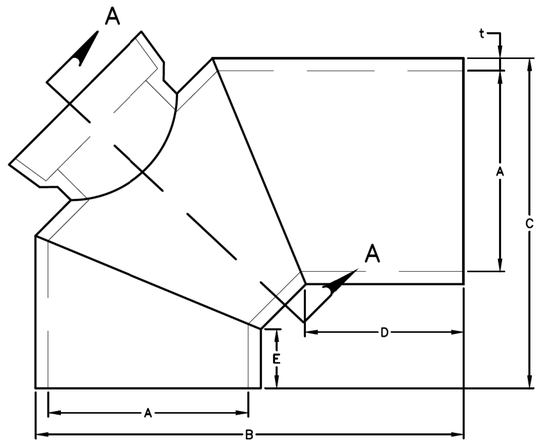

SIDE VIEW

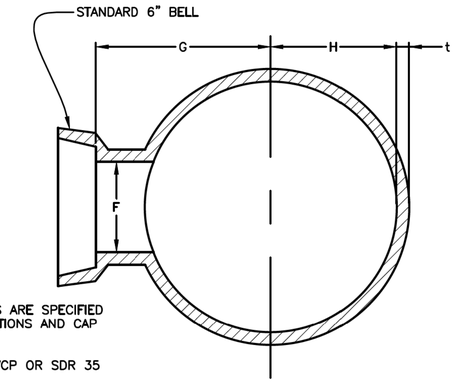

SECTION A–A

GENERAL NOTES:

1. WHEN 8" OR 10" H–H TRAPS ARE SPECIFIED USE PREFABRICATED TEE SECTIONS AND CAP THE APPROPRIATE OPENING.
2. H.H. TRAPS MAY BE EITHER VCP OR SDR 35 PVC PIPE.
3. IN LIEU OF AN H.H. TRAP, A TIDEFLEX SERIES TF–1 CHECK VALVE, SERIES 35–1 CHECK VALVE OR CHECKMATE VALVE MAY BE INSTALLED. ALL INSTALLATIONS SHALL BE PER THE MANUFACTURERS RECOMMENDATION.
4. FOR SEWERS LARGER THAN 15" IN DIAMETER A TIDEFLEX SERIES TF–1 CHECK VALVE, SERIES 35–1 CHECK VALVE OR RODNEY HUNT SERIES FV–AC FLAP GATE MAY BE INSTALLED AT THE DISCRETION OF SSES.

STANDARD DIMENSIONS FOR 12" & 15" H.H. CATCH BASIN TRAPS

TYPE	A	B	C	D	E	F	G	H	t
12" TRAP	12" DIA.	2'–4"	1'–9"	13"	4"	6"	8 3/4"	6"	1"
15" TRAP	15" DIA.	2'–7 3/4"	2'–3/4"	13"	6"	6"	10 3/4"	7 1/2"	1 1/4"

CITY OF COLUMBUS, OHIO
DEPARTMENT OF PUBLIC UTILITIES
DIVISION OF SEWERAGE & DRAINAGE

SSES MANAGER

H.H. INLET & MANHOLE TRAP 15" DIAMETER & SMALLER

STANDARD DRAWING
AA–S163

REVISED 8/8/14

PAGE 1 / 1

CALCULATED | CHECKED

MISC. DETAILS

FRA-70-14.54

1228
2317

PLOT.CEL
ms consultants, inc.
msconsultants.com
www.msconsultants.com
Ohio DOT Workspace
70\71 East Interchange 2E
PCF: ohdot\V8i
PCF: 60-06634_2E_Columbus
Batchplot Spec: \\msconsultants.com\files\production\03\60\06634_2E\standards\plotdrv\batchplt.spc
Pen Table: N:\03\60\06634_2E\standards\tables\V8i_ms_std_06634_2D_Plan View.tbl
Plot Driver: \\msconsultants.com\files\Standards\ustn\ohdot\v8i\ms\plotting\PDF.pltdrv
Model: Sheet View: FENCE_VIEW1
Printed: 6/19/2018 @ 9:13:14 AM By: jdoughs
File: N:\03\60\06634_2E\utilities\sheets\V05322U0057.dgn
34" x 22"

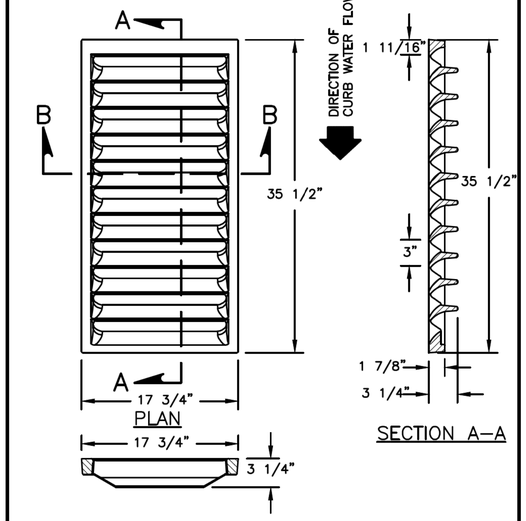

CURB GRATING

APPROX. WEIGHT = 138LBS.

PRE–APPROVED CASTINGS:

EJ NO. – 7030 WITH Z1 FRAME, M4 GRATE & T6 BACK

NEENAH NO. – 3067–V OR (R–32900022 TYPE "N" SQUARE BACK)

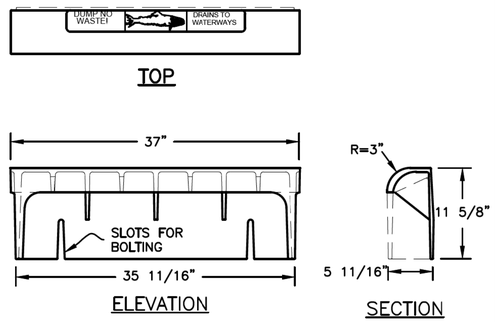

STANDARD CATCH BASIN ADJUSTABLE BACK

APPROX. WEIGHT = 79LBS.

NOTE:
1. CURB ADJUSTMENT 6" TO 11".
2. FOR GRANITE OR OTHER SQUARE CURB SECTIONS A SQUARE BACK CASTING WITH AN ENVIRONMENTAL NOTICE OR MOUNT PLATE SHALL BE USED.

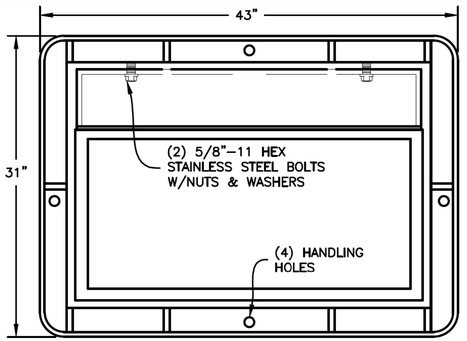

NOTE:
1. FRAMES, GRATES AND COVERS, SHALL MEET REQUIREMENTS OF 604.02 & AASHTO M306

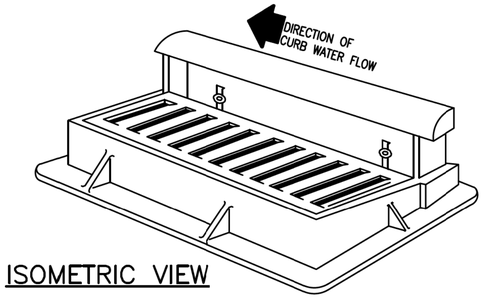

ISOMETRIC VIEW

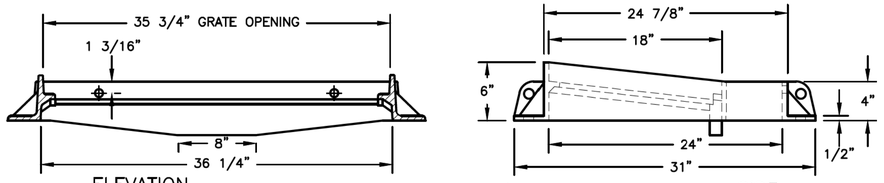

FRAME ASSEMBLY W/ADJUST. BACK

APPROX. WEIGHT = 198LBS. (FRAME ONLY)

CITY OF COLUMBUS, OHIO DEPARTMENT OF PUBLIC UTILITIES DIVISION OF SEWERAGE & DRAINAGE	CAST IRON FRAME AND GRATE FOR CURB & GUTTER INLET (HEAVY DUTY)	STANDARD DRAWING AA–S128
SSES MANAGER		REVISED 8/8/14
		PAGE 1 / 2

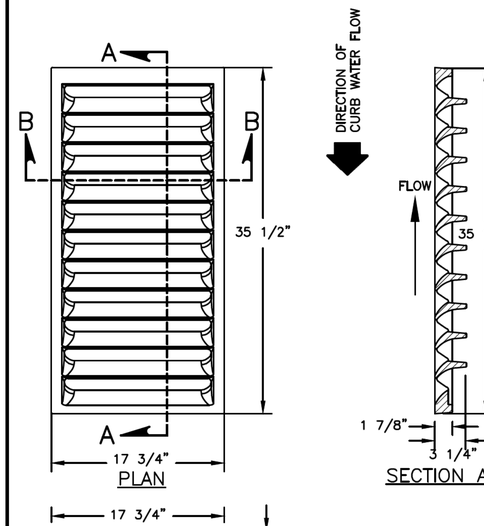

CURB GRATING

APPROX. WEIGHT = 138LBS.

PRE–APPROVED CASTINGS:

EJ NO. – 7031, 7032 WITH Z1 FRAME, M4 GRATE & T6 BACK

NEENAH NO. – 3295–2 WITH TYPE V GRATE OR (R–32900022 TYPE "N" SQUARE BACK)

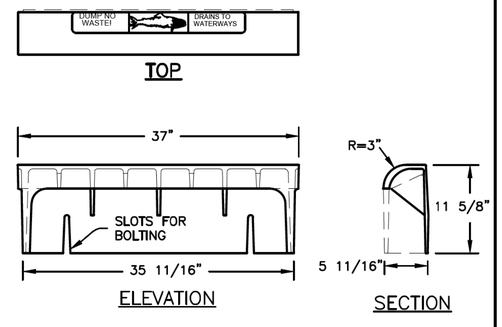

STANDARD CATCH BASIN ADJUSTABLE BACK

APPROX. WEIGHT = 79LBS.

NOTE:
1. CURB ADJUSTMENT 6" TO 11".
2. FOR GRANITE OR OTHER SQUARE CURB SECTIONS A SQUARE BACK CASTING WITH AN ENVIRONMENTAL NOTICE OR MOUNT PLATE SHALL BE USED.

5/8"–HEX STAINLESS STEEL WITH NUTS & WASHERS (TYP.)

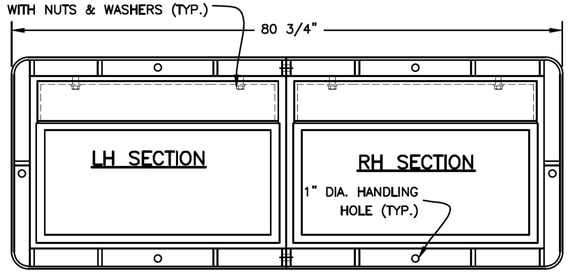

NOTES:
1. FRAMES, GRATES & COVERS, SHALL MEET REQUIREMENTS OF 604.02 & AASHTO M306.
2. SEE SHEETS AA–S125A, B, AND C FOR MULTIPLE CATCH BASIN CONFIGURATIONS.
3. LEFT, RIGHT, & CENTER FRAME SECTIONS PROVIDED BY MANUFACTURER.

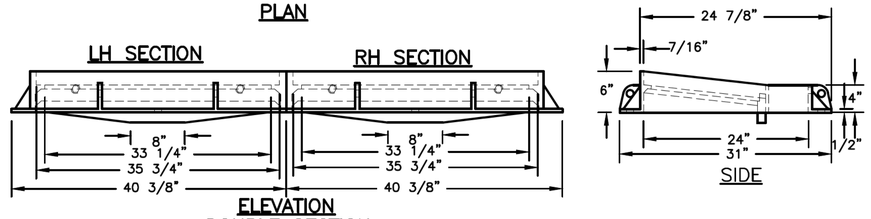

CITY OF COLUMBUS, OHIO DEPARTMENT OF PUBLIC UTILITIES DIVISION OF SEWERAGE & DRAINAGE	CAST IRON FRAME AND GRATE FOR CURB & GUTTER INLET (HEAVY DUTY)	STANDARD DRAWING AA–S128
SSES MANAGER		REVISED 8/8/14
		PAGE 2 / 2

CALCULATED | CHECKED

MISC. DETAILS

FRA-70-14.54

1229
2317

ms consultants, inc.

PLOT.CEL
ms consultants, inc.
msconsultants.com
www.msconsultants.com
Ohio DOT Workspace
70\71 East Interchange 2E
PCF: ohdot1V8i
PCF: 60-06634_2E_Columbus
Batchplot Spec: \\msconsultants.com\files\production\03\60\06634_2E\standards\plotdrv\batchplt.spc
Pen Table: N:\03\60\06634_2E\standards\tables\V8i_ms_std_06634_2D_Plan View.tbl
Plot Driver: \\msconsultants.com\files\Standards\ustn\ohdot\v8i\ms\plotting\PDF.pltdrv
Model: Sheet
Printed: 6/19/2018 @ 9:13:29 AM
File: N:\03\60\06634_2E\utilities\sheets\05322U0058.dgn
View: FENCE_VIEW1
By: jdouglas
34" x 22"

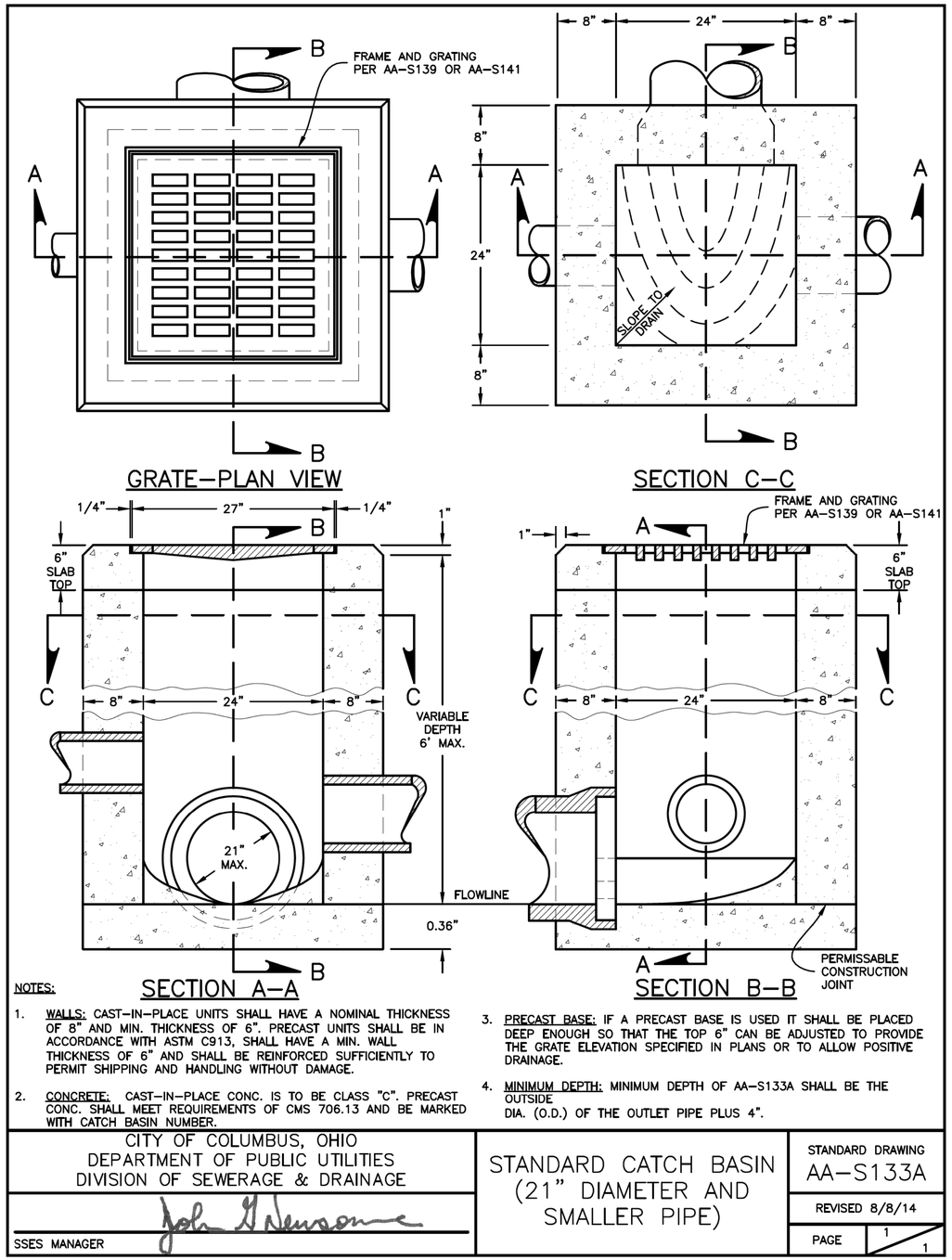

NOTES:

1. WALLS: CAST-IN-PLACE UNITS SHALL HAVE A NOMINAL THICKNESS OF 8" AND MIN. THICKNESS OF 6". PRECAST UNITS SHALL BE IN ACCORDANCE WITH ASTM C913, SHALL HAVE A MIN. WALL THICKNESS OF 6" AND SHALL BE REINFORCED SUFFICIENTLY TO PERMIT SHIPPING AND HANDLING WITHOUT DAMAGE.
2. CONCRETE: CAST-IN-PLACE CONC. IS TO BE CLASS "C". PRECAST CONC. SHALL MEET REQUIREMENTS OF CMS 706.13 AND BE MARKED WITH CATCH BASIN NUMBER.
3. PRECAST BASE: IF A PRECAST BASE IS USED IT SHALL BE PLACED DEEP ENOUGH SO THAT THE TOP 6" CAN BE ADJUSTED TO PROVIDE THE GRATE ELEVATION SPECIFIED IN PLANS OR TO ALLOW POSITIVE DRAINAGE.
4. MINIMUM DEPTH: MINIMUM DEPTH OF AA-S133A SHALL BE THE OUTSIDE DIA. (O.D.) OF THE OUTLET PIPE PLUS 4".

CITY OF COLUMBUS, OHIO DEPARTMENT OF PUBLIC UTILITIES DIVISION OF SEWERAGE & DRAINAGE SSES MANAGER	STANDARD CATCH BASIN (21" DIAMETER AND SMALLER PIPE)	STANDARD DRAWING AA-S133A REVISED 8/8/14 PAGE 1/1

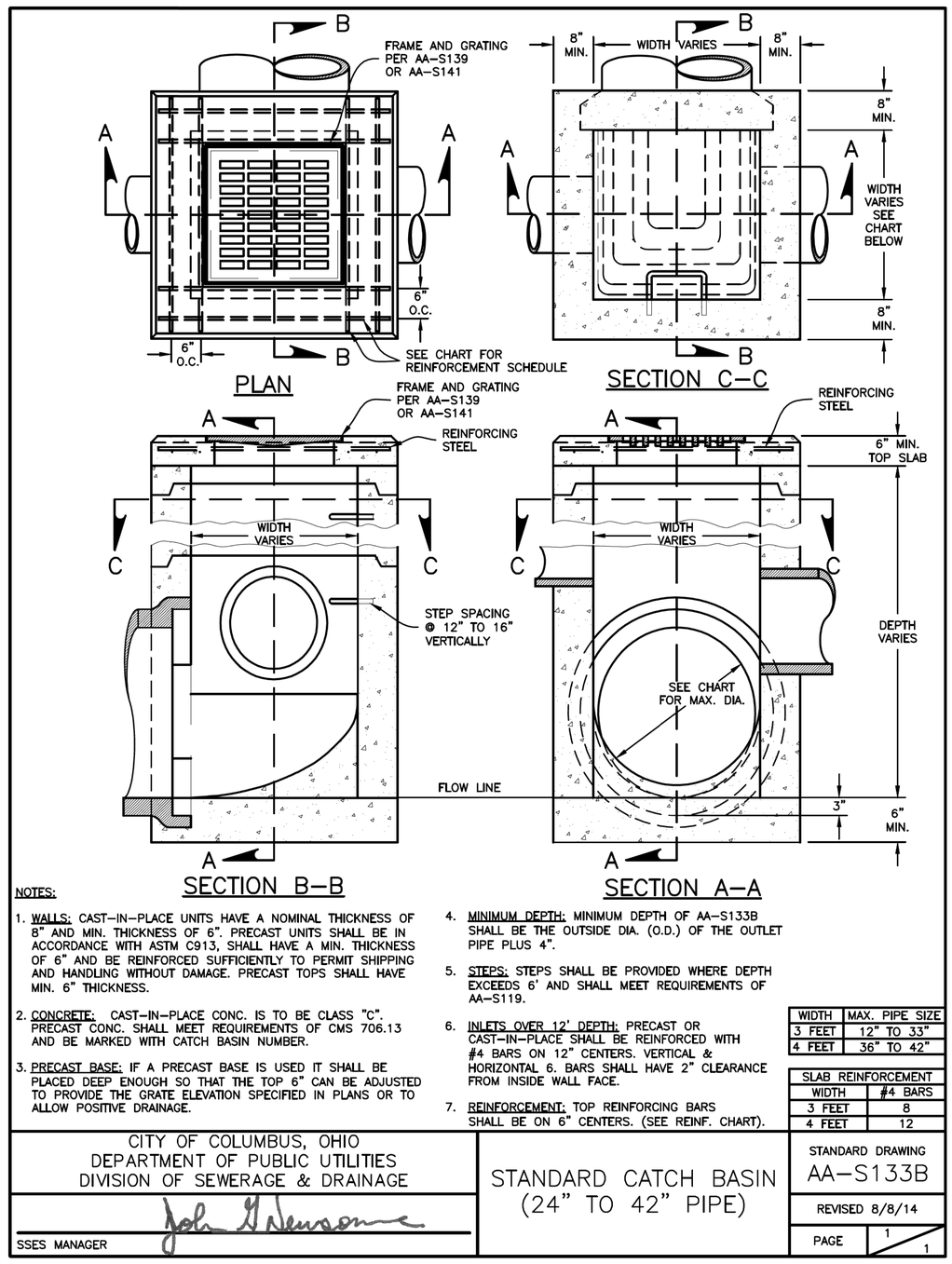

NOTES:

1. WALLS: CAST-IN-PLACE UNITS HAVE A NOMINAL THICKNESS OF 8" AND MIN. THICKNESS OF 6". PRECAST UNITS SHALL BE IN ACCORDANCE WITH ASTM C913, SHALL HAVE A MIN. THICKNESS OF 6" AND BE REINFORCED SUFFICIENTLY TO PERMIT SHIPPING AND HANDLING WITHOUT DAMAGE. PRECAST TOPS SHALL HAVE MIN. 6" THICKNESS.
2. CONCRETE: CAST-IN-PLACE CONC. IS TO BE CLASS "C". PRECAST CONC. SHALL MEET REQUIREMENTS OF CMS 706.13 AND BE MARKED WITH CATCH BASIN NUMBER.
3. PRECAST BASE: IF A PRECAST BASE IS USED IT SHALL BE PLACED DEEP ENOUGH SO THAT THE TOP 6" CAN BE ADJUSTED TO PROVIDE THE GRATE ELEVATION SPECIFIED IN PLANS OR TO ALLOW POSITIVE DRAINAGE.
4. MINIMUM DEPTH: MINIMUM DEPTH OF AA-S133B SHALL BE THE OUTSIDE DIA. (O.D.) OF THE OUTLET PIPE PLUS 4".
5. STEPS: STEPS SHALL BE PROVIDED WHERE DEPTH EXCEEDS 6' AND SHALL MEET REQUIREMENTS OF AA-S119.
6. INLETS OVER 12' DEPTH: PRECAST OR CAST-IN-PLACE SHALL BE REINFORCED WITH #4 BARS ON 12" CENTERS. VERTICAL & HORIZONTAL 6. BARS SHALL HAVE 2" CLEARANCE FROM INSIDE WALL FACE.
7. REINFORCEMENT: TOP REINFORCING BARS SHALL BE ON 6" CENTERS. (SEE REINF. CHART).

WIDTH	MAX. PIPE SIZE
3 FEET	12" TO 33"
4 FEET	36" TO 42"

SLAB REINFORCEMENT	
WIDTH	#4 BARS
3 FEET	8
4 FEET	12

CITY OF COLUMBUS, OHIO DEPARTMENT OF PUBLIC UTILITIES DIVISION OF SEWERAGE & DRAINAGE SSES MANAGER	STANDARD CATCH BASIN (24" TO 42" PIPE)	STANDARD DRAWING AA-S133B REVISED 8/8/14 PAGE 1/1

CALCULATED | CHECKED

MISC. DETAILS

FRA-70-14.54

1230
2317

ms consultants, inc.

PLOT.CEL
ms consultants, inc.
msconsultants.com
www.msconsultants.com
Ohio DOT Workspace
70\71 East Interchange 2E
ODF: ohdot\V8i
PCF: 60-06634_2E_Columbus
Batchplot Spec: \\vnsconsultants.com\Files\production\Q3\60\06634_2E\standards\plotdrv\batchplt.spc
Pen Table: N:\Q3\60\06634_2E\standards\tables\V8i_ms_std_06634_2D_Plan View.tbl
Plot Driver: \\vnsconsultants.com\Files\Standards\usetn\ohdot\v8i\ms\plotting\PDF.pltcfg
Model: Sheet
Printed: 6/19/2018 @ 9:13:44 AM
File: N:\Q3\60\06634_2E\utilities\sheets\1053220059.dgn
View: FENCE_VIEW1
By: jdouglas
34" x 22"

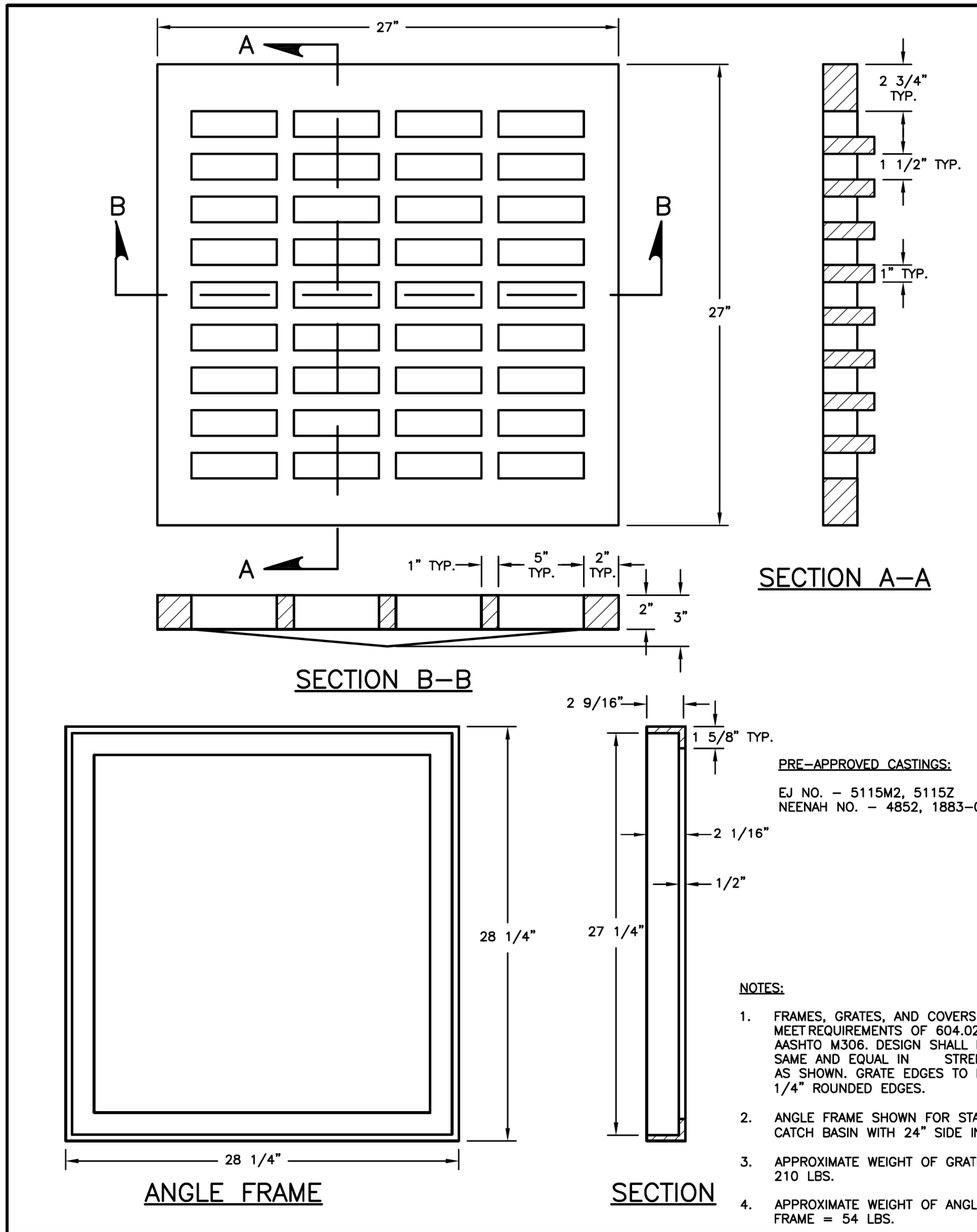

SECTION B–B

SECTION A–A

ANGLE FRAME

SECTION

PRE-APPROVED CASTINGS:

EJ NO. – 5115M2, 5115Z
NEENAH NO. – 4852, 1883–0018

NOTES:

1. FRAMES, GRATES, AND COVERS SHALL MEET REQUIREMENTS OF 604.02 AND AASHTO M306. DESIGN SHALL BE THE SAME AND EQUAL IN STRENGTH AS SHOWN. GRATE EDGES TO HAVE 1/4" ROUNDED EDGES.
2. ANGLE FRAME SHOWN FOR STANDARD CATCH BASIN WITH 24" SIDE INLETS.
3. APPROXIMATE WEIGHT OF GRATE = 210 LBS.
4. APPROXIMATE WEIGHT OF ANGLE FRAME = 54 LBS.

CITY OF COLUMBUS, OHIO DEPARTMENT OF PUBLIC UTILITIES DIVISION OF SEWERAGE & DRAINAGE	HEAVY DUTY GRATE AND ANGLE FRAME FOR STANDARD CATCH BASIN	STANDARD DRAWING AA–S141
SSES MANAGER		REVISED 12/6/13
		PAGE 1 / 1

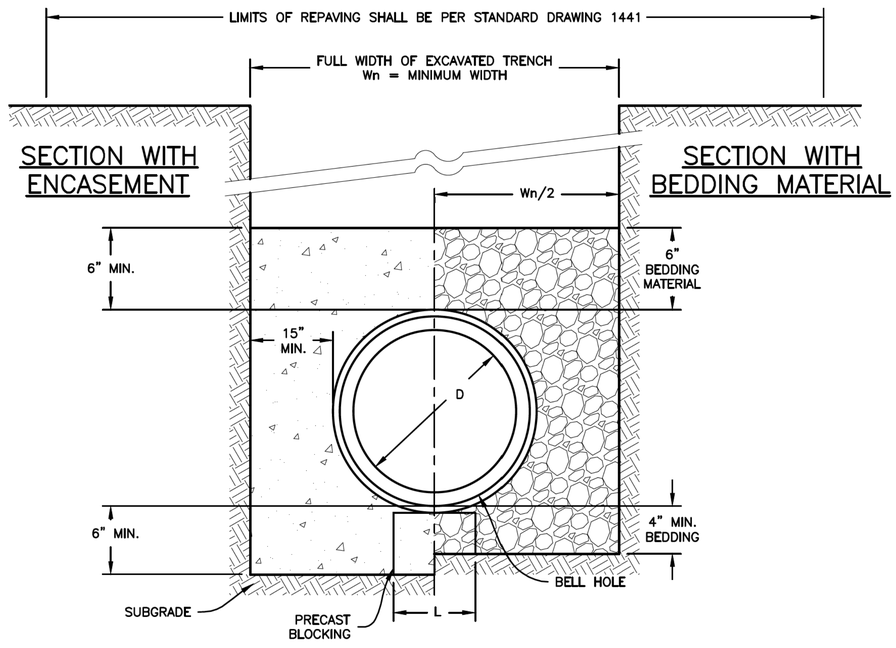

DIA	Wn	L
6"	30"	12"
8"	30"	12"
10"	30"	12"
12"	32"	12"
15"	36"	12"
18"	40"	12"
21"	44"	12"
24"	48"	12"
27"	52"	12"
30"	56"	15"
36"	64"	18"
42"	72"	21"
48"	80"	24"
60"	96"	30"

NOTES:

1. SECTIONS SYMETRICAL ABOUT ℄.
2. PIPE DIMENSIONS ON CHART ARE MINIMUM AND EXPRESSED IN INCHES.
3. FOR SANITARY SEWER CONSTRUCTION TRENCH DAMS ARE REQUIRED AS SPECIFIED UNDER 901.11.
4. PROVIDE EMBEDMENT IN ACCORDANCE WITH THE RECOMMENDATIONS OF ASTM D2321, 7.5.
5. ENCASEMENT TO BE CLASS "A" CONCRETE, ITEM 905.
6. THE PIPE SHALL BE SUPPORTED BY 12" CONCRETE BLOCKING WHEN CONCRETE ENCASEMENT IS REQUIRED.
7. BLOCKING SHALL HAVE THE LENGTH SHOWN IN THE CHART OR OF SUFFICIENT LENGTH SO THAT THE PIPE LOAD ON THE SUBGRADE SHALL NOT EXCEED 3,000 LBS/SF. SEE CHART FOR MINIMUM BLOCKING LENGTHS.

CITY OF COLUMBUS, OHIO DEPARTMENT OF PUBLIC UTILITIES DIVISION OF SEWERAGE & DRAINAGE	TYPE I BEDDING FOR FLEXIBLE SEWER PIPE 6" TO 60" DIAMETER	STANDARD DRAWING AA–S149
SSES MANAGER		REVISED 10/15/14
		PAGE 1 / 1

CALCULATED | CHECKED

MISC. DETAILS

FRA-70-14.54

1231
2317

ms consultants, inc.

PLOT.CEL
ms consultants, inc.
msconsultants.com
www.msconsultants.com
Ohio DOT Workspace
70\71 East Interchange 2E
DGN: ohdot\V8i
PCF: 60-06634_2E_Columbus
Batchplot Spec: \\msconsultants.com\Files\production\03\60\06634_2E\standards\plotdrv\batchplt.spc
Pen Table: N:\03\60\06634_2E\standards\tables\V8i_ms_std_06634_2D_Plan View.tbl
Plot Driver: \\msconsultants.com\Files\Standards\usetn\ohdot\v8i\ms\plotting\PDF.pltdrv
Model: Sheet
Printed: 6/19/2018 @ 9:13:58 AM
File: N:\03\60\06634_2E\utilities\sheets\05322U0060.dgn
View: FENCE_VIEW1
By: jdouglas
34" x 22"

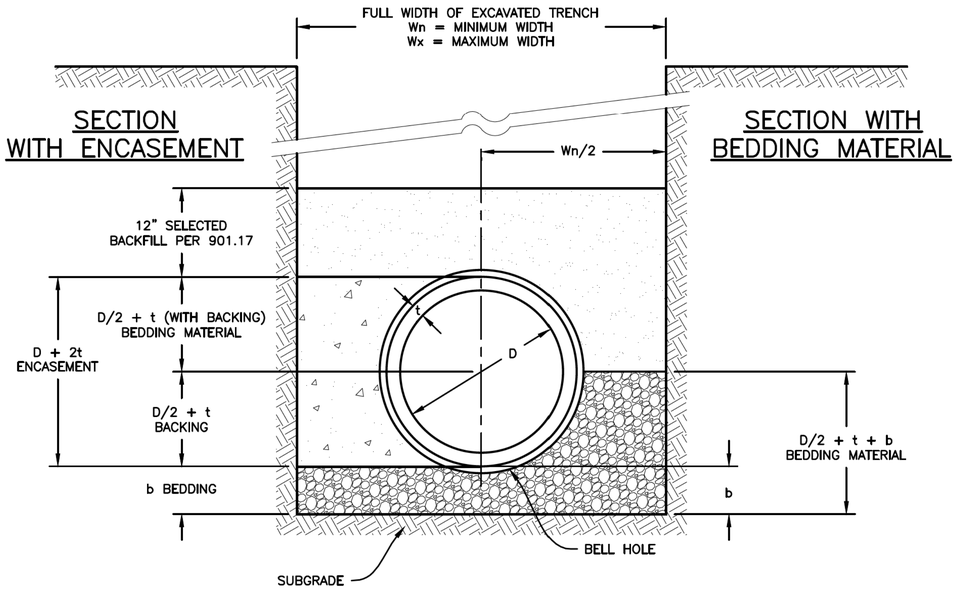

SMALL DIAMETERS
b = 4"

D	Wn	Wx
6"	24"	48"
8"	27"	48"
10"	30"	48"
12"	32"	48"
15"	36"	50"
18"	40"	53"
21"	44"	57"
24"	48"	60"
27"	52"	64"

MID DIAMETERS
b = 6"

D	Wn	Wx
30"	57"	67"
33"	61"	71"
36"	64"	74"
42"	71"	81"
48"	78"	88"
54"	87"	95"
60"	96"	102"
66"	105"	127"

LARGE DIAMETERS
b = 6"

D	Wn	Wx
72"	116"	134"
78"	123"	141"
84"	130"	148"
90"	136"	155"
96"	143"	162"
102"	151"	169"
108"	160"	176"

NOTES:

1. SECTIONS SYMETRICAL ABOUT ℄.
2. PIPE DIMENSIONS ON CHART ARE EXPRESSED IN INCHES.
3. FOR SANITARY SEWER CONSTRUCTION TRENCH DAMS ARE REQUIRED AS SPECIFIED UNDER 901.11.
4. BACKING AND ENCASEMENT TO BE CLASS "A" CONCRETE, ITEM 905.
5. PAYMENT FOR CONCRETE BACKING AND ENCASEMENT SHALL BE BASED ON MINIMUM TRENCH WIDTH (Wn).

CITY OF COLUMBUS, OHIO
DEPARTMENT OF PUBLIC UTILITIES
DIVISION OF SEWERAGE & DRAINAGE

SSES MANAGER

TYPE I BEDDING FOR RIGID SEWER PIPE 6" TO 108" DIAMETER

STANDARD DRAWING
AA-S151

REVISED 7/9/12

PAGE 1/1

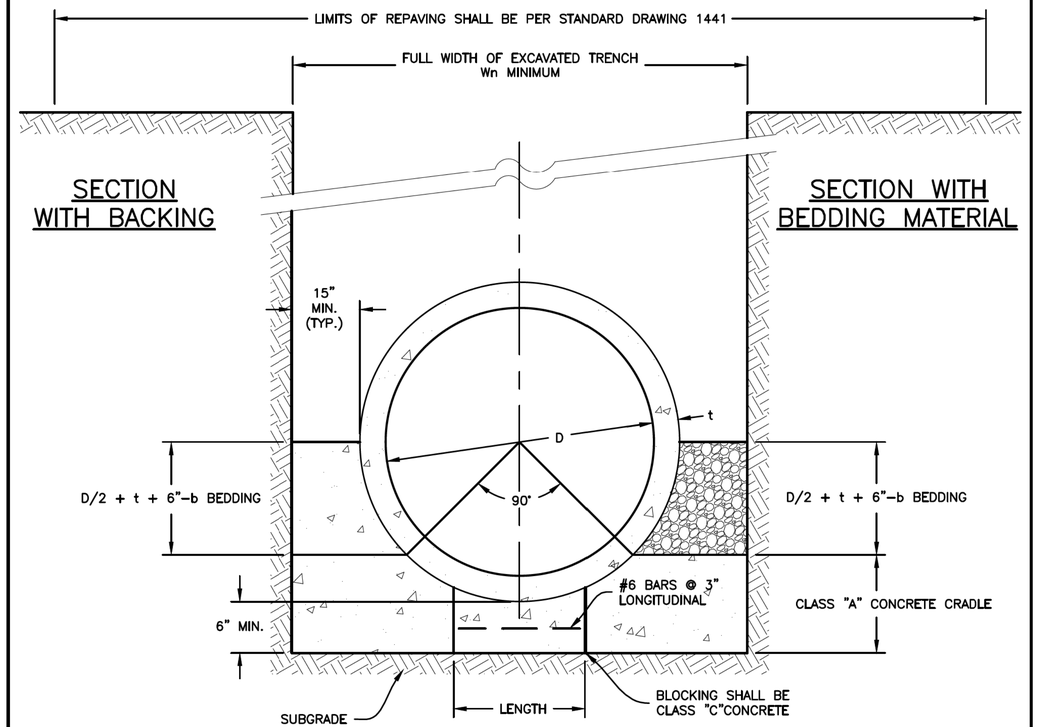

D	t	Wn	b
30	3.5	57	11.5
33	3.75	61	12
36	4	64	12.5
42	4.5	71	13.5
48	5	78	14.5
54	5.5	87	15.5
60	6	96	16.5
66	6.5	105	17.5
72	7	116	18.5
78	7	123	19.5
84	8.5	130	20.5
90	8	136	21.5
96	8.5	143	22.5
102	8.5	151	23.5
108	9	160	24.5

NOTES:

1. SECTIONS SYMETRICAL ABOUT ℄.
2. PIPE DIMENSIONS ON CHART ARE EXPRESSED IN INCHES.
3. FOR SANITARY SEWER CONSTRUCTION TRENCH DAMS ARE REQUIRED AS SPECIFIED UNDER 901.11.
4. BACKING AND ENCASEMENT TO BE CLASS "A" CONCRETE, ITEM 905.
5. PAYMENT FOR CONCRETE BACKING AND ENCASEMENT SHALL BE BASED ON MINIMUM TRENCH WIDTH (Wn).
6. BLOCKING SHALL HAVE THE LENGTH SHOWN IN THE CHART OR OF SUFFICIENT LENGTH SO THAT THE PIPE LOAD ON THE SUBGRADE SHALL NOT EXCEED 3,000 LBS/SF
7. THE CONCRETE CRADLE QUANTITY INCLUDES THE VOLUME OF THE CLASS "C" CONCRETE BLOCKING.

CITY OF COLUMBUS, OHIO
DEPARTMENT OF PUBLIC UTILITIES
DIVISION OF SEWERAGE & DRAINAGE

SSES MANAGER

TYPE II BEDDING FOR RIGID SEWER PIPE 30" TO 108" DIAMETER

STANDARD DRAWING
AA-S153

REVISED 7/9/12

PAGE 1/1

CALCULATED | CHECKED

MISC. DETAILS

FRA-70-14.54

1232
2317

PLOT.CEL
ms consultants, inc.
msconsultants.com
Ohio DOT Workspace
70\71 East Interchange 2E
www.msconsultants.com
Batchplot Spec: \\msconsultants.com\files\production\03\60\06634_2E\standards\plotdrv\batchplt.spc
Pen Table: N:\03\60\06634_2E\standards\tables\V8i_ms_std_06634_2D_Plan View.tbl
Plot Driver: \\msconsultants.com\files\Standards\ustn\ohdot\v8i\ms\plotting\PDF.pltcfg
DGN: ohdotV8i
PCF: 60-06634_2E_Columbus
1" 0.5" 0
34" x 22"
View: FENCE_VIEW1
By: jdouglas
Model: Sheet
Printed: 6/19/2018 @ 9:14:13 AM
File: N:\03\60\06634_2E\utilities\sheets\105220006.dgn

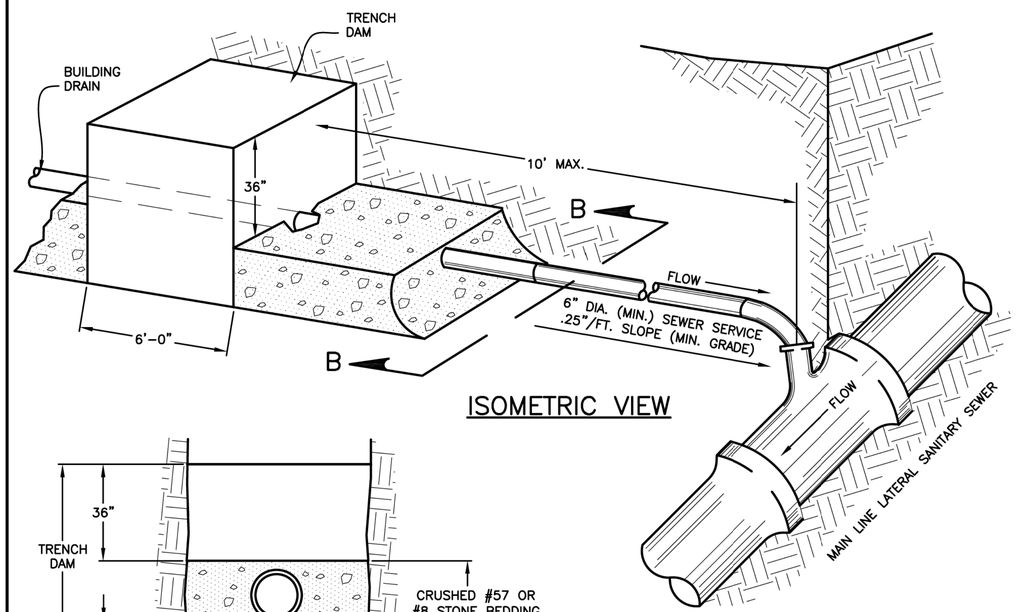

NOTES:

1. TRENCH DAMS ARE REQUIRED AS SPECIFIED UNDER 918.04 AND SHALL BE CONSTRUCTED TO 36" OVER THE PIPE.
2. SANITARY HOUSE CONNECTION SERVICES SHALL BE CONNECTED TO THE EXISTING SEWER WITH THE SAME MATERIAL FITTING OR WITH A COMPATIBLE ADAPTOR IN ACCORDANCE WITH 915 AND 918.02.

CITY OF COLUMBUS, OHIO DEPARTMENT OF PUBLIC UTILITIES DIVISION OF SEWERAGE & DRAINAGE	TYPICAL SANITARY HOUSE SERVICE CONNECTION	STANDARD DRAWING AA-S160
APPROVED: SSES MANAGER		REVISED 3/11/16
		PAGE 1/2

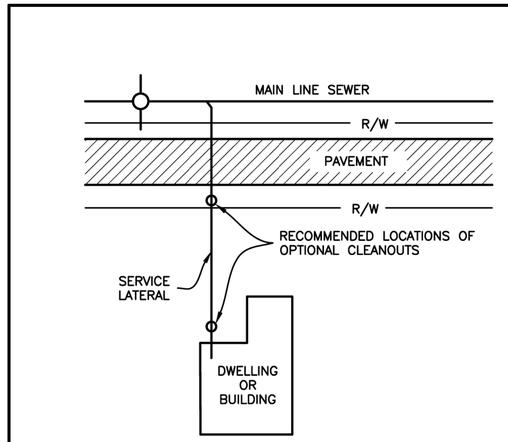

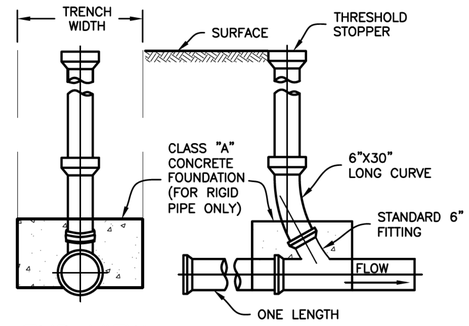

CLEANOUT
(OPTIONAL)

ALLOWABLE CONNECTIONS – SANITARY HOUSE CONNECTION TO BLDG. WASTE LINE

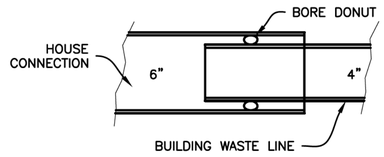

BORE DONUT

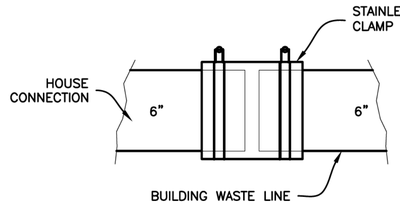

FLEXIBLE COUPLING

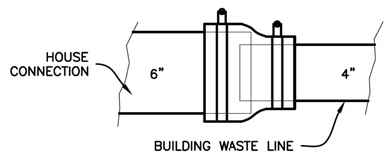

FLEXIBLE REDUCING COUPLING

NOTES:

1. COUPLINGS SHALL BE FERNCO COUPLINGS SERIES #5000 OR APPROVED EQUAL.
2. FOR PLASTIC TO PLASTIC CONNECTIONS HARD FITTINGS SHALL BE USED.

CITY OF COLUMBUS, OHIO DEPARTMENT OF PUBLIC UTILITIES DIVISION OF SEWERAGE & DRAINAGE	TYPICAL SANITARY HOUSE SERVICE CONNECTION	STANDARD DRAWING AA-S160
APPROVED: SSES MANAGER		REVISED 3/11/16
		PAGE 2/2

CALCULATED | CHECKED

MISC. DETAILS

FRA-70-14.54

1233
2317

ms consultants, inc.

PLOT.CEL

ms consultants, inc.
msconsultants.com

Ohio DOT Workspace
70\71 East Interchange 2E

www.msconsultants.com

1"
0.5"
0

ODF: ohdot\V8i
PCF: 60-06634_2E_Columbus

Batchplot Spec: \\msconsultants.com\files\production\03\60\06634_2E\standards\plotdr\batchplt.spc
Pen Table: N:\03\60\06634_2E\standards\tables\V8i_ms_std_06634_2D_Plan View.tbl
Plot Driver: \\msconsultants.com\files\Standards\usetn\ohdot\v8i\ms\plotting\PDF.pltdrg

Model: Sheet
Printed: 6/19/2018 @ 9:14:26 AM
File: N:\03\60\06634_2E\utilities\sheets\05322U0062.dgn

View: FENCE_VIEW1
By: jdouglas

34" x 22"

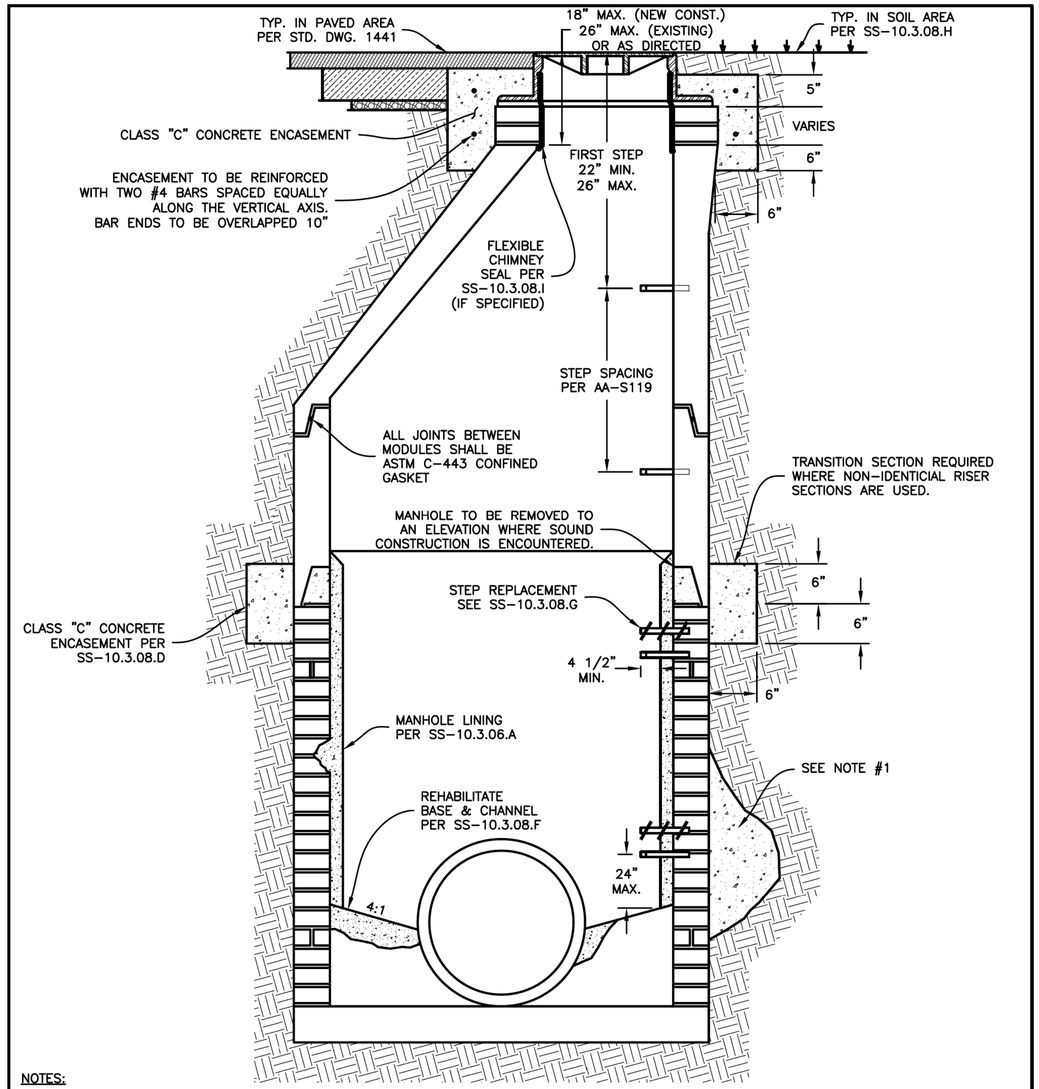

NOTES:

1. MANHOLE WALLS SHALL BE SOUNDED WITH A HAMMER, AND ALL VOIDS SHALL BE FILLED WITH GROUT AS PER SS-7.
2. MANHOLE WALLS TO BE CLEANED, PATCHED, AND LINED PER SS-10.
3. THE CONTRACTOR SHALL PLACE A DEVICE IN THE MANHOLE TO CATCH ANY DEBRIS WHICH MAY FALL INTO THE MANHOLE DURING PERFORMANCE OF WORK. ALL MATERIAL RESULTING FROM THE CLEANING AND/OR REPAIR OF THE REPAIR OF THE MANHOLE SHALL BE REMOVED AND PROPERLY DISPOSED.

CITY OF COLUMBUS, OHIO
DEPARTMENT OF PUBLIC UTILITIES
DIVISION OF SEWERAGE & DRAINAGE

APPROVED:

SSES MANAGER

MANHOLE RECONSTRUCTION AND REHABILITATION

STANDARD DRAWING
AA-S171

REVISED 12/15/16

PAGE 1 / 1

CALCULATED | CHECKED

MISC. DETAILS

FRA-70-14.54

1234
2317

ms consultants, inc.

PLOT.CEL
ms consultants, inc.
msconsultants.com
www.msconsultants.com
Ohio DOT Workspace
70\71 East Interchange 2E
PCF: ohdot\V8i
PCF: 60-06634_2E_Columbus
Batchplot Spec: \\msconsultants.com\files\production\03\60\06634_2E\standards\plotdrv\batchplt.spc
Pen Table: N:\03\60\06634_2E\standards\tables\V8i_ms_std_06634_2D_Plan View.tbl
Plot Driver: \\msconsultants.com\files\Standards\usm\ohdot\v8i\ms\plotting\PDF.pltcfg
Model: Sheet
Printed: 6/19/2018 @ 9:14:33 AM
File: N:\03\60\06634_2E\utilities\sheets\105220D063.dgn
View: FENCE_VIEW1
By: jdougas
34" x 22"

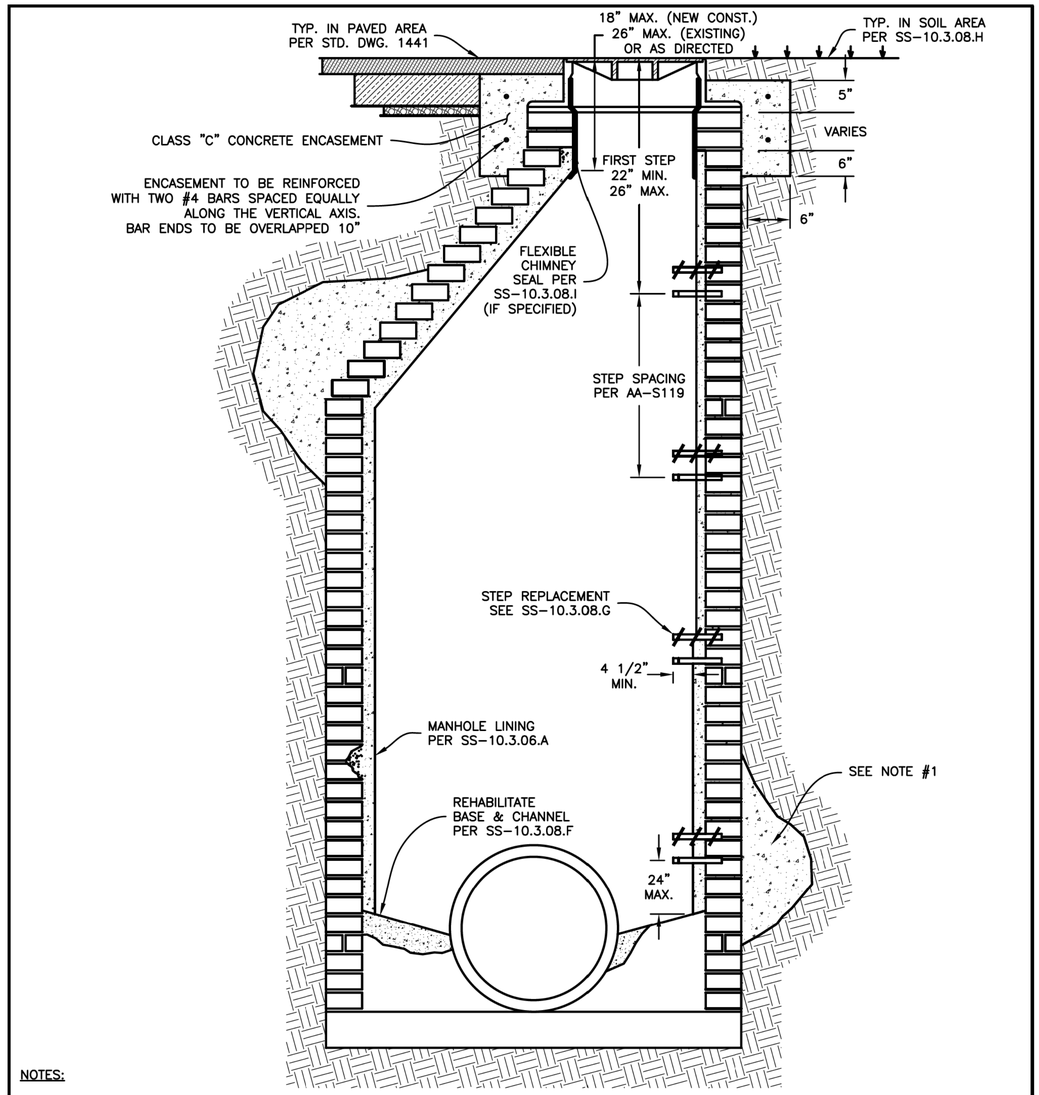

NOTES:

1. MANHOLE WALLS SHALL BE SOUNDED WITH A HAMMER, AND ALL VOIDS SHALL BE FILLED WITH GROUT AS PER SS-7.
2. MANHOLE WALLS TO BE CLEANED, PATCHED, AND LINED PER SS-10.
3. THE CONTRACTOR SHALL PLACE A DEVICE IN THE MANHOLE TO CATCH ANY DEBRIS WHICH MAY FALL INTO THE MANHOLE DURING PERFORMANCE OF WORK. ALL MATERIAL RESULTING FROM THE CLEANING AND/OR REPAIR OF THE REPAIR OF THE MANHOLE SHALL BE REMOVED AND PROPERLY DISPOSED.

CITY OF COLUMBUS, OHIO DEPARTMENT OF PUBLIC UTILITIES DIVISION OF SEWERAGE & DRAINAGE	BRICK MANHOLE REHABILITATION	STANDARD DRAWING AA-S172
APPROVED: SSES MANAGER		REVISED 12/15/16
		PAGE 1 / 1

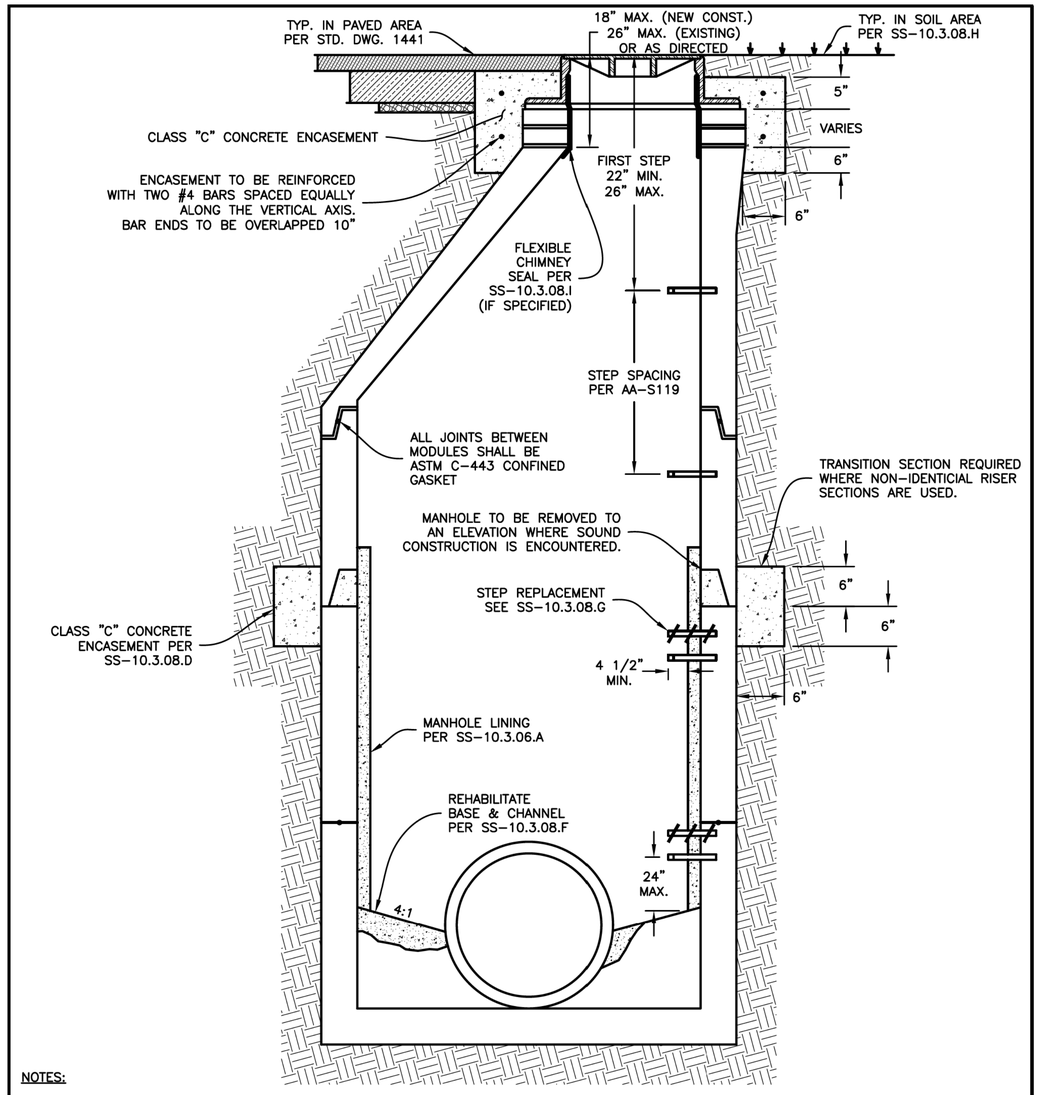

NOTES:

1. MANHOLE WALLS SHALL BE SOUNDED WITH A HAMMER, AND ALL VOIDS SHALL BE FILLED WITH GROUT AS PER SS-7.
2. MANHOLE WALLS TO BE CLEANED, PATCHED, AND LINED PER SS-10.
3. THE CONTRACTOR SHALL PLACE A DEVICE IN THE MANHOLE TO CATCH ANY DEBRIS WHICH MAY FALL INTO THE MANHOLE DURING PERFORMANCE OF WORK. ALL MATERIAL RESULTING FROM THE CLEANING AND/OR REPAIR OF THE REPAIR OF THE MANHOLE SHALL BE REMOVED AND PROPERLY DISPOSED.

CITY OF COLUMBUS, OHIO DEPARTMENT OF PUBLIC UTILITIES DIVISION OF SEWERAGE & DRAINAGE	PRE-CAST MANHOLE REHABILITATION	STANDARD DRAWING AA-S173
APPROVED: SSES MANAGER		REVISED 12/15/16
		PAGE 1 / 1

CALCULATED | CHECKED

MISC. DETAILS

FRA-70-14.54

1235
2317

PLOT.CEL
ms consultants, inc.
msconsultants.com
www.msconsultants.com
Ohio DOT Workspace
70\71 East Interchange 2E
PCF: 60-06634_2E_Columbus
PDF: ohdot\Bi
Batchplot Spec: \\msconsultants.com\files\production\03\60\06634_2E\standards\plotdrv\batchplt.spc
Pen Table: N:\03\60\06634_2E\standards\tables\V8i_ms_std_06634_2D_Plan View.tbl
Plot Driver: \\msconsultants.com\files\Standards\ustn\ohdot\v8i\ms\plotting\PDF.pltcfg
Model: Sheet View: FENCE_VIEW1
Printed: 6/19/2018 @ 9:14:47 AM By: jdougas
File: N:\03\60\06634_2E\utilities\sheets\05322d0070.dgn
34" x 22"

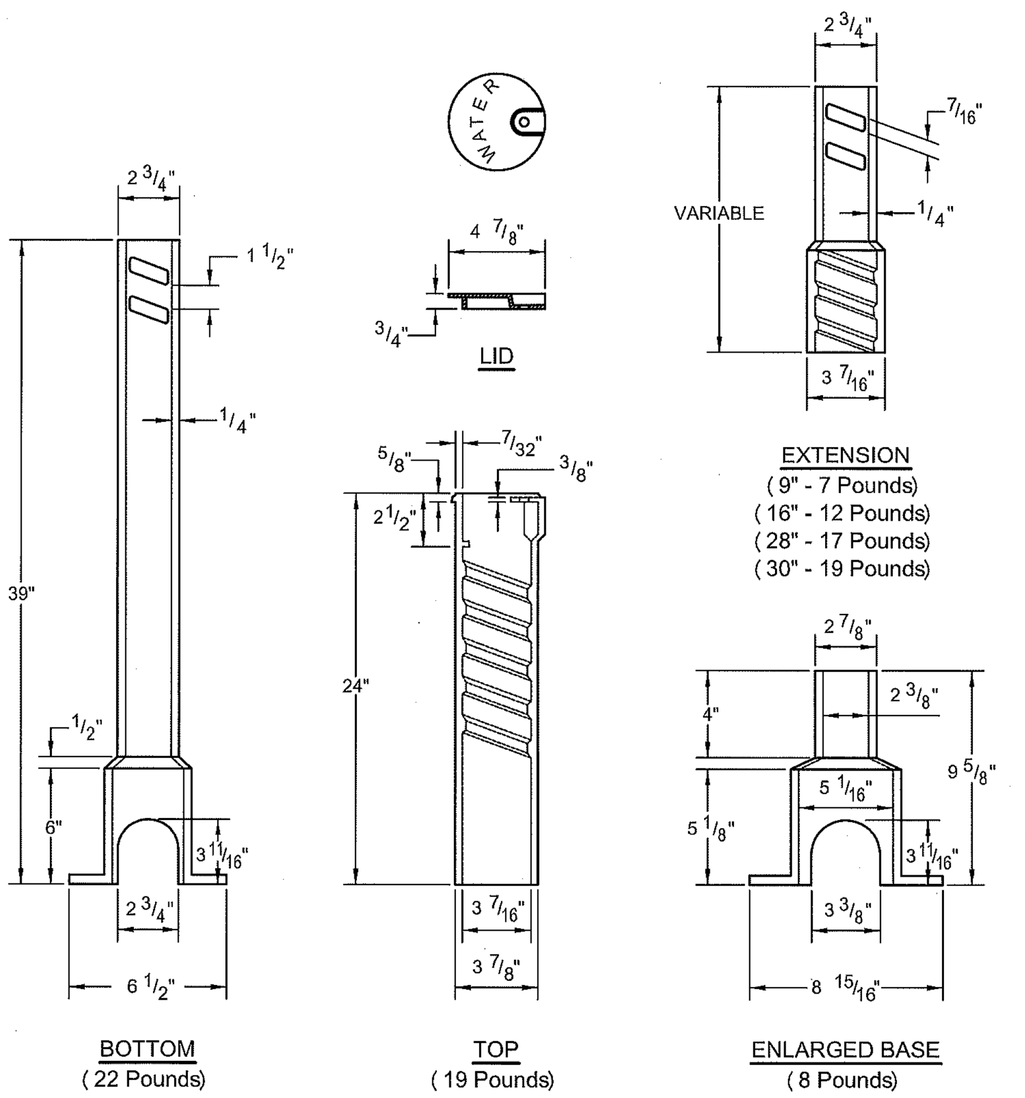

L-1001.Dwg Revision Date: 1/2/13

CITY OF COLUMBUS DEPARTMENT OF PUBLIC UTILITIES DIVISION OF WATER	STANDARD DETAIL TYPICAL CURB BOX	L-1001
APPROVED: RC Westerfield 1-26-18 ADMINISTRATOR DATE		

MATERIAL SPECIFICATIONS PER AWWA C-105
LINEAR LOW-DENSITY POLYETHYLENE FILM WITH MIN. 8 MIL. THICKNESS, MADE FROM VIRGIN POLYETHYLENE ONLY.

	TUBE SIZE REQUIRED											
PIPE DIAMETER	3"	4"	6"	8"	10"	12"	16"	20"	24"	30"	36"	42"
MIN. FLAT TUBE WIDTH (INCHES)	14	14	16	20	24	27	34	41	54	67	81	81

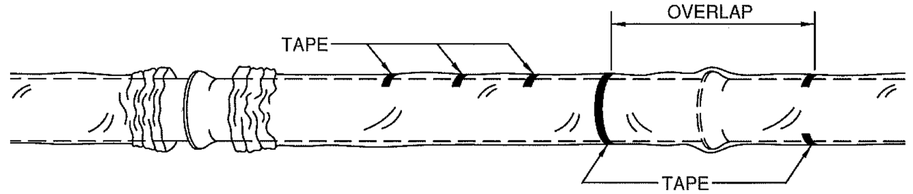

THE FOLLOWING METHOD ILLUSTRATES THE PROCEDURE FOR APPLYING POLYETHYLENE:

CUT POLYETHYLENE TUBE TO A LENGTH APPROXIMATELY TWO FEET LONGER THAN THE LENGTH OF THE PIPE SECTION, SLIP THE TUBE AROUND THE PIPE, CENTERING IT TO PROVIDE A ONE-FOOT OVERLAP ON EACH ADJACENT PIPE SECTION, AND BUNCHING IT ACCORDION FASHION LENGTHWISE UNTIL IT CLEARS THE PIPE ENDS.

LOWER THE PIPE INTO THE TRENCH AND MAKE THE PIPE JOINT WITH THE PRECEDING SECTION OF PIPE. A SHALLOW BELL HOLE MUST BE MADE AT THE JOINTS TO FACILITATE INSTALLATION OF THE POLYETHYLENE TUBE.

AFTER ASSEMBLING THE PIPE JOINT, MAKE THE OVERLAP OF THE POLYETHYLENE TUBE, PULL THE BUNCHED POLYETHYLENE FROM THE PRECEDING LENGTH OF PIPE, SLIP IT OVER THE END OF THE NEW LENGTH OF PIPE AND SECURE IT IN PLACE. THEN SLIP THE END OF THE POLYETHYLENE FROM THE NEW PIPE SECTION OVER THE END OF THE PRECEDING LENGTH OF PIPE, SECURE THE OVERLAP IN PLACE, TAKE UP THE SLACK WIDTH TO MAKE IT SNUG, BUT NOT TOO TIGHT, FIT ALONG THIS BARREL OF PIPE, SECURING THE FOLD AT QUARTER POINTS.

REPAIR ANY RIPS, PUNCTURES, OR OTHER DAMAGE TO THE POLYETHYLENE WITH ADHESIVE TAPE OR WITH A SHORT LENGTH OF THE POLYETHYLENE TUBE CUT OPEN, WRAPPED AROUND THE PIPE, AND SECURED IN PLACE. PROCEED WITH INSTALLATION OF THE NEXT SECTION OF PIPE IN THE SAME MANNER.

PIPE-SHAPED APPURTENANCES

BENDS, REDUCERS, OFFSETS AND OTHER PIPE-SHAPED APPURTENANCES SHALL BE COVERED IN THE SAME MANNER AS THE PIPE.

JUNCTIONS BETWEEN WRAPPED AND UNWRAPPED PIPE

WHERE POLYETHYLENE WRAPPED PIPE JOINS A PIPE WHICH IS NOT WRAPPED, EXTEND THE POLYETHYLENE TUBE TO COVER THE UNWRAPPED PIPE A DISTANCE OF AT LEAST TWO FEET. SECURE THE END WITH CIRCUMFERENTIAL TURNS OF TAPE.

ODD SHAPED APPURTENANCES:

VALVES, TEES, CROSSES AND OTHER ODD-SHAPED PIECES WHICH CANNOT BE WRAPPED PRACTICALLY IN A TUBE SHALL BE WRAPPED WITH A FLAT SHEET OR SPLIT LENGTH OF POLYETHYLENE TUBE. THE SHEET SHALL BE PASSED UNDER THE APPURTENANCE AND BROUGHT UP AROUND THE BODY. SEAMS SHALL BE MADE BY BRINGING THE EDGES TOGETHER, FOLDING OVER TWICE, AND TAPPING DOWN. SLACK WIDTH AND OVERLAPS AT JOINTS SHALL BE HANDLED AS DESCRIBED ABOVE. TAPE POLYETHYLENE SECURELY IN PLACE AT VALVE STEM AND OTHER PENETRATIONS.

BACKFILL FOR POLYETHYLENE WRAPPED PIPE:

BACKFILL MATERIAL SHALL BE THE SAME AS SPECIFIED FOR PIPE WITHOUT POLYTHYLENE WRAPPING. SPECIAL CARE SHOULD BE TAKEN TO PREVENT DAMAGE TO THE POLYETHYLENE WRAPPING WHEN PLACING BACKFILL, BACKFILL MATERIAL SHOULD BE FREE OF CINDERS, REFUGE, BOULDERS, ROCKS, STONES OR OTHER MATERIAL THAT COULD DAMAGE POLYETHYLENE.

L-1003.Dwg Revision Date: 1/29/13

CITY OF COLUMBUS DEPARTMENT OF PUBLIC UTILITIES DIVISION OF WATER	STANDARD DETAIL INSTALLATION OF POLYETHYLENE ENCASEMENT FOR DUCTILE IRON PIPE	L-1003
APPROVED: RC Westerfield 1-26-18 ADMINISTRATOR DATE		

CALCULATED | CHECKED

MISC. DETAILS

FRA-70-14.54

1236
2317

ms consultants, inc.

PLOT.CEL
ms consultants, inc.
msconsultants.com
www.msconsultants.com
Ohio DOT Workspace
70\71 East Interchange 2E
PCF: ohdot\V8i
PCF: 60-06634_2E_Columbus
Batchplot Spec: \\msconsultants.com\files\production\03\60\06634_2E\standards\plotdrv\batchplt.spc
Pen Table: N:\03\60\06634_2E\standards\tables\V8i_ms_std_06634_2D_Plan View.tbl
Plot Driver: \\msconsultants.com\files\Standards\ustn\ohdot\v8i\ms\plotting\PDF.pltcfg
Model: Sheet
Printed: 6/19/2018 @ 9:15:01 AM
File: N:\03\60\06634_2E\utilities\sheets\105220007f.dgn
View: FENCE_VIEW1
By: jdougas
34" x 22"

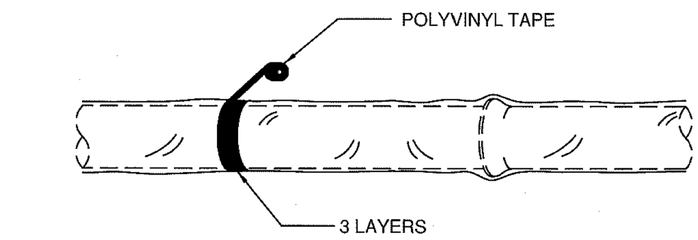

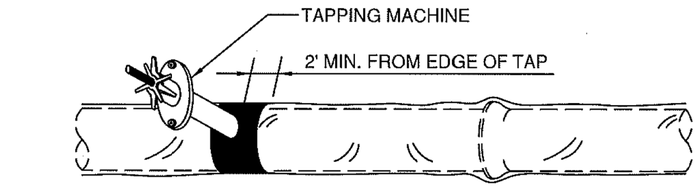

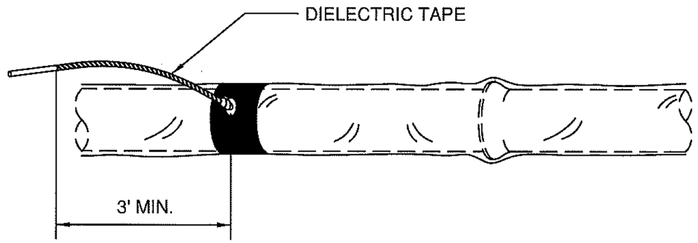

OPENINGS FOR WATER TAPS, BLOW-OFFS, AIR RELEASE VALVES AND SIMILIAR APPURTENANCES SHALL BE MADE OF:

1.) *WRAPPING (3) THREE LAYERS OF POLYVINYL - COMPATIBLE ADHESIVE TAPE COMPLETELY AROUND THE PIPE TO COVER THE AREA WHERE THE TAPPING MACHINE AND CHAIN WILL BE MOUNTED, EXTENDING A MINIMUM OF 2" BEYOND THE MOUNTING SURFACE.*

2.) *MOUNT THE TAPPING MACHINE ON THE PIPE AREA COVERED BY THE TAPE AND MAKE THE TAP AND INSTALL THE CORPORATION STOP DIRECTLY THROUGH THE TAPE AND POLYETHYLENE.*

3.) *INSPECT THE ENTIRE CIRCUMFERENTIAL AREA FOR DAMAGE AND MAKE ANY NECESSARY REPAIRS WITH TAPE.*

4.) *TO MINIMIZE THE POSSIBILITY OF DISSIMILIAR METAL CORROSION AT SERVICE CONNECTIONS, WRAP THE CORPORATION STOP AND A MINIMUM CLEAR DISTANCE OF THREE FEET OF THE COPPER WATER TAP WITH POLYETHYLENE OR A SUITABLE DIELECTRIC TAPE.*

L-1004.Dwg Revision Date: 1/19/18

CITY OF COLUMBUS DEPARTMENT OF PUBLIC UTILITIES DIVISION OF WATER	STANDARD DETAIL INSTALLATION OF POLYETHYLENE ENCASEMENT FOR WATER TAPS, BLOW-OFFS, AIR RELEASE VALVES & SIMILIAR APPURTENANCES	L-1004
APPROVED: R C Westerfield 1-26-18 ADMINISTRATOR DATE		

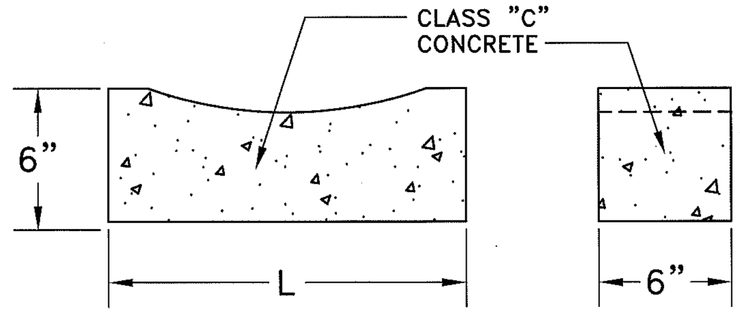

GATE VALVES

BUTTERFLY VALVES

SIZE OF VALVE	L	VOLUME CU-FT
3"	15"	0.31
4"	16"	0.33
6"	17"	0.36
8"	20"	0.42
12"	24"	0.50
16"	30"	0.63
20"	36"	0.75
24"	42"	0.88
30"	48"	1.00
36"	54"	1.13
42"	60"	1.25
48"	66"	1.38

NOTE:
FOR VALVES LARGER THAN 48" THE SUPPORT SHALL BE DESIGNED BY A STRUCTURAL ENGINEER.

L_6306.Dwg Revision Date: 1/2/13

CITY OF COLUMBUS DEPARTMENT OF PUBLIC UTILITIES DIVISION OF WATER	STANDARD DETAIL CONCRETE VALVE SUPPORTS	L-6306
APPROVED: R C Westerfield 1-26-18 ADMINISTRATOR DATE		

CALCULATED | CHECKED

MISC. DETAILS

FRA-70-14.54

1237
2317

ms consultants, inc.

PLOT.CEL
ms consultants, inc.
msconsultants.com
www.msconsultants.com
Ohio DOT Workspace
70\71 East Interchange 2E
PCF: ohdot\V8i
PCF: 60-06634_2E_Columbus
Batchplot Spec: \\msconsultants.com\Files\production\03\60\06634_2E\standards\plotdrv\batchplt.spc
Pen Table: N:\03\60\06634_2E\standards\tables\V8i_ms_std_06634_2D_Plan View.tbl
Plot Driver: \\msconsultants.com\Files\Standards\ustn\ohdot\v8i\ms\plotting\PDF.pltcfg
Model: Sheet
Printed: 6/19/2018 @ 9:15:15 AM
File: N:\03\60\06634_2E\utilities\sheets\105220072.dgn
View: FENCE_VIEW1
By: jdougas
34" x 22"

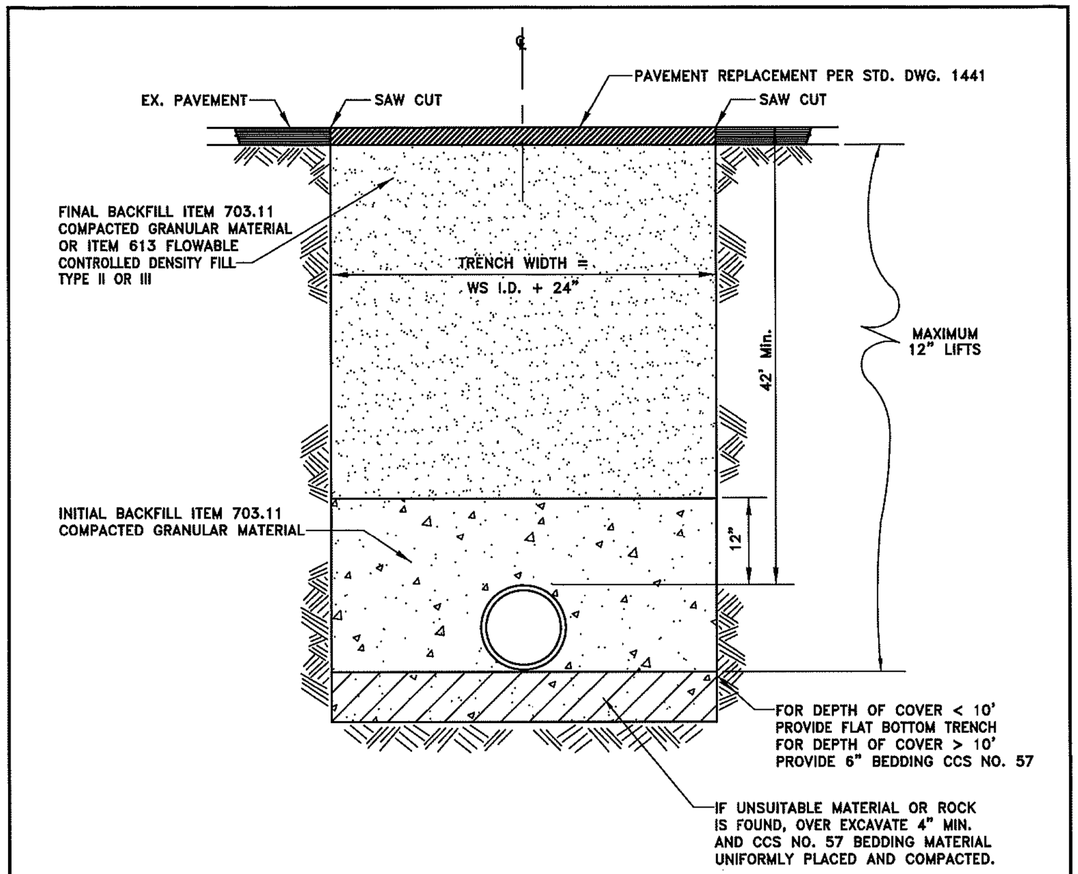

NOTES:

1. REFER TO OSHA REQUIREMENTS FOR MAXIMUM ALLOWABLE TRENCH SLOPES.
2. PROVIDE FILTER FABRIC WHEN VERY FINE OR UNSTABLE MATERIAL IS ENCOUNTERED.
3. BACKFILL SHALL BE COMPACTED PER THE REQUIREMENTS OF ITEM 801.12.
4. IF CONTAMINATED SOILS ARE ENCOUNTERED DURING EXCAVATION, CEASE DIGGING AND CONTACT THE DIVISION OF WATER DISTRIBUTION ENGINEERING SECTION.

L-6309A Revision Date: 1/19/18

CITY OF COLUMBUS DEPARTMENT OF PUBLIC UTILITIES DIVISION OF WATER	STANDARD DETAIL TYPICAL TRENCH EXCAVATION & BACKFILL UNDER INFLUENCE OF PAVEMENT (FOR 16" DIAMETER WATER MAIN AND SMALLER)	L-6309A
APPROVED: R C Westerfield 1-26-18 ADMINISTRATOR DATE		

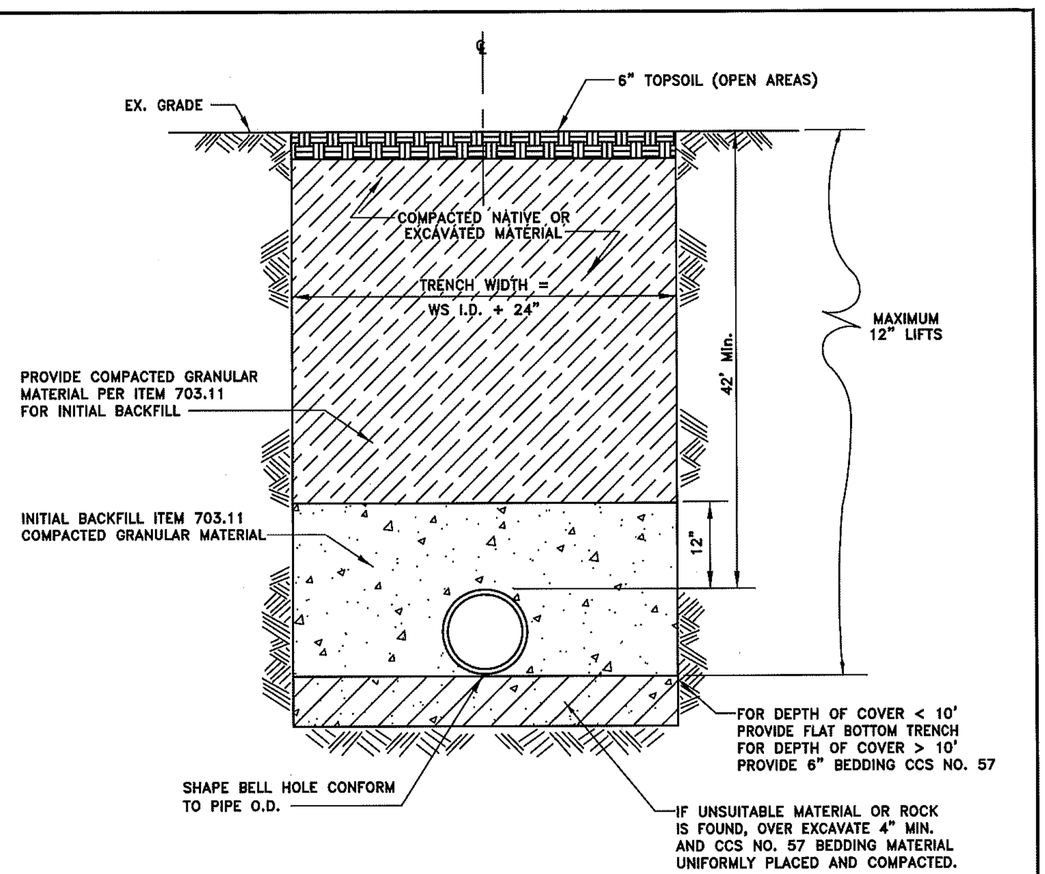

NOTES:

1. REFER TO OSHA REQUIREMENTS FOR MAXIMUM ALLOWABLE TRENCH SLOPES.
2. PROVIDE FILTER FABRIC WHEN VERY FINE OR UNSTABLE MATERIAL IS ENCOUNTERED.
3. BACKFILL SHALL BE COMPACTED PER THE REQUIREMENTS OF ITEM 801.12.
4. IF CONTAMINATED SOILS ARE ENCOUNTERED DURING EXCAVATION, CEASE DIGGING AND CONTACT THE DIVISION OF WATER DISTRIBUTION ENGINEERING SECTION.

L-6309B Revision Date: 1/19/18

CITY OF COLUMBUS DEPARTMENT OF PUBLIC UTILITIES DIVISION OF WATER	STANDARD DETAIL TYPICAL TRENCH EXCAVATION & BACKFILL OUTSIDE INFLUENCE OF PAVEMENT (FOR 16" DIAMETER WATER MAIN AND SMALLER)	L-6309B
APPROVED: R C Westerfield 1-26-18 ADMINISTRATOR DATE		

CALCULATED | CHECKED

MISC. DETAILS

FRA-70-14.54

1238
2317

PLOT.CEL
ms consultants, inc.
msconsultants.com
www.msconsultants.com
Ohio DOT Workspace
70\71 East Interchange 2E
PCF: 60-06634_2E_Columbus
OPF: ohdotV8i
Batchplot Spec: \\msconsultants.com\Files\production\03\60\06634_2E\standards\plotdrv\batchplt.spc
Pen Table: N:\03\60\06634_2E\standards\tables\V8i_ms_std_06634_2D_Plan View.tbl
Plot Driver: \\msconsultants.com\Files\Standards\usetn\ohdot\v8i\ms\plotting\PDF.pltcfg
File: N:\03\60\06634_2E\Utilities\Sheets\05322D0073.dgn
Model: Sheet
Printed: 6/19/2018 @ 9:15:29 AM
By: jdouglas
View: FENCE_VIEW1
34" x 22"

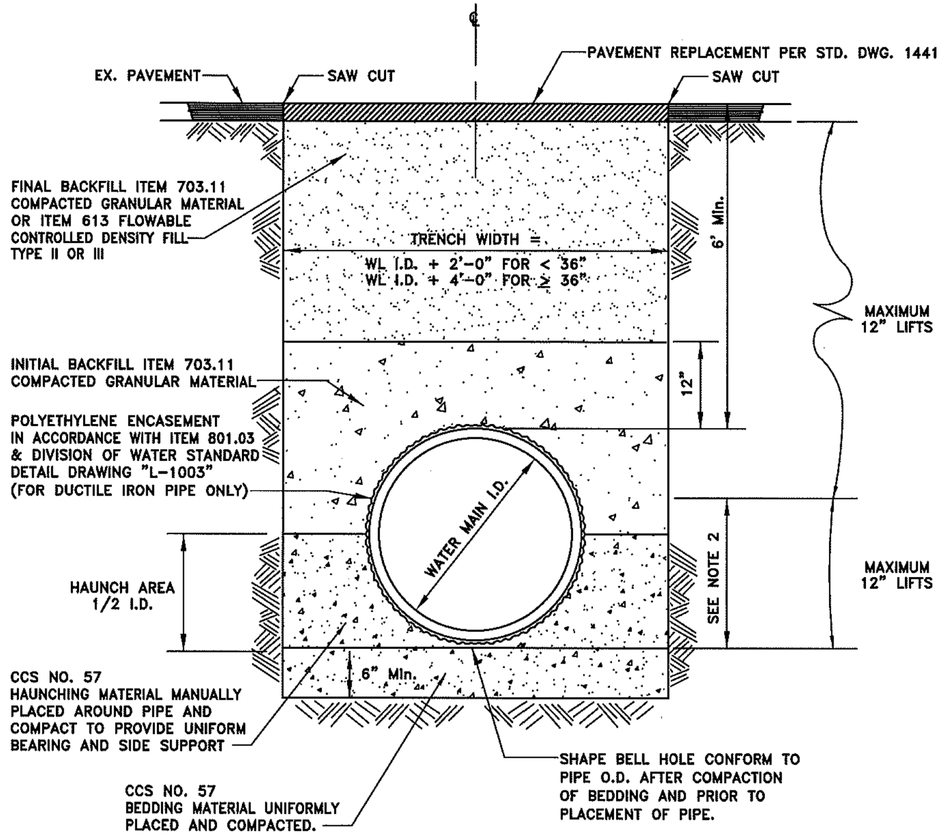

NOTES:

1. REFER TO OSHA REQUIREMENTS FOR MAXIMUM ALLOWABLE TRENCH SLOPES.
2. THIS PORTION OF PIPE EMBEDMENT ZONE MUST BE RECOMPACTED TO PROPER DENSITIES AFTER MOVING SUPPORT SYSTEM FORWARD.
3. PROVIDE FILTER FABRIC WHEN VERY FINE OR UNSTABLE MATERIAL IS ENCOUNTERED.
4. BACKFILL SHALL BE COMPACTED PER THE REQUIREMENTS OF ITEM 801.12.
5. IF CONTAMINATED SOILS ARE ENCOUNTERED DURING EXCAVATION, CEASE DIGGING AND CONTACT THE DIVISION OF WATER DISTRIBUTION ENGINEERING SECTION.

L-6309C Revision Date: 1/19/18

CITY OF COLUMBUS
DEPARTMENT OF PUBLIC UTILITIES
DIVISION OF WATER

APPROVED: R C Westerfield 1-26-18
ADMINISTRATOR DATE

STANDARD DETAIL
TYPICAL TRENCH
EXCAVATION & BACKFILL UNDER
INFLUENCE OF PAVEMENT
(FOR 20" DIAMETER WATER MAIN AND LARGER)

L-6309C

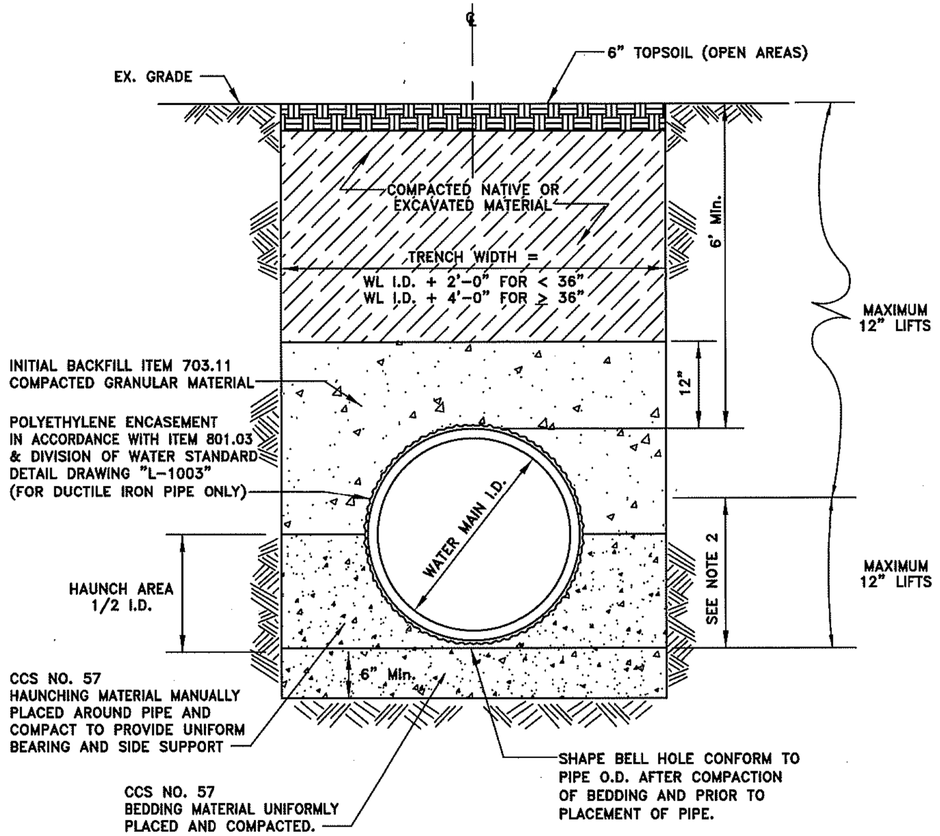

NOTES:

1. REFER TO OSHA REQUIREMENTS FOR MAXIMUM ALLOWABLE TRENCH SLOPES.
2. THIS PORTION OF PIPE EMBEDMENT ZONE MUST BE RECOMPACTED TO PROPER DENSITIES AFTER MOVING SUPPORT SYSTEM FORWARD.
3. PROVIDE FILTER FABRIC WHEN VERY FINE OR UNSTABLE MATERIAL IS ENCOUNTERED.
4. BACKFILL SHALL BE COMPACTED PER THE REQUIREMENTS OF ITEM 801.12.
5. IF CONTAMINATED SOILS ARE ENCOUNTERED DURING EXCAVATION, CEASE DIGGING AND CONTACT THE DIVISION OF WATER DISTRIBUTION ENGINEERING SECTION.

L-6309D Revision Date: 1/19/18

CITY OF COLUMBUS
DEPARTMENT OF PUBLIC UTILITIES
DIVISION OF WATER

APPROVED: R C Westerfield 1-26-18
ADMINISTRATOR DATE

STANDARD DETAIL
TYPICAL TRENCH
EXCAVATION & BACKFILL OUTSIDE
INFLUENCE OF PAVEMENT
(FOR 20" DIAMETER WATER MAIN AND LARGER)

L-6309D

CALCULATED | CHECKED

MISC. DETAILS

FRA-70-14.54

1239
2317

ms consultants, inc.

PLOT.CEL
ms consultants, inc.
msconsultants.com
www.msconsultants.com
Ohio DOT Workspace
70\71 East Interchange 2E
PCF: 60-06634_2E_Columbus
PCF: ohdotV8i
Batchplot Spec: \\msconsultants.com\files\production\03\60\06634_2E\standards\plotdrv\batchplt.spc
Pen Table: N:\03\60\06634_2E\standards\tables\V8i_ms_std_06634_2D_Plan View.tbl
Plot Driver: \\msconsultants.com\files\Standards\usetn\ohdot\v8i\ms\plotting\PDF.pltcfg
Model: Sheet
Printed: 6/19/2018 @ 9:15:43 AM
File: N:\03\60\06634_2E\utilities\sheets\V05220D074.dgn
View: FENCE_VIEW1
By: jbougas
34" x 22"

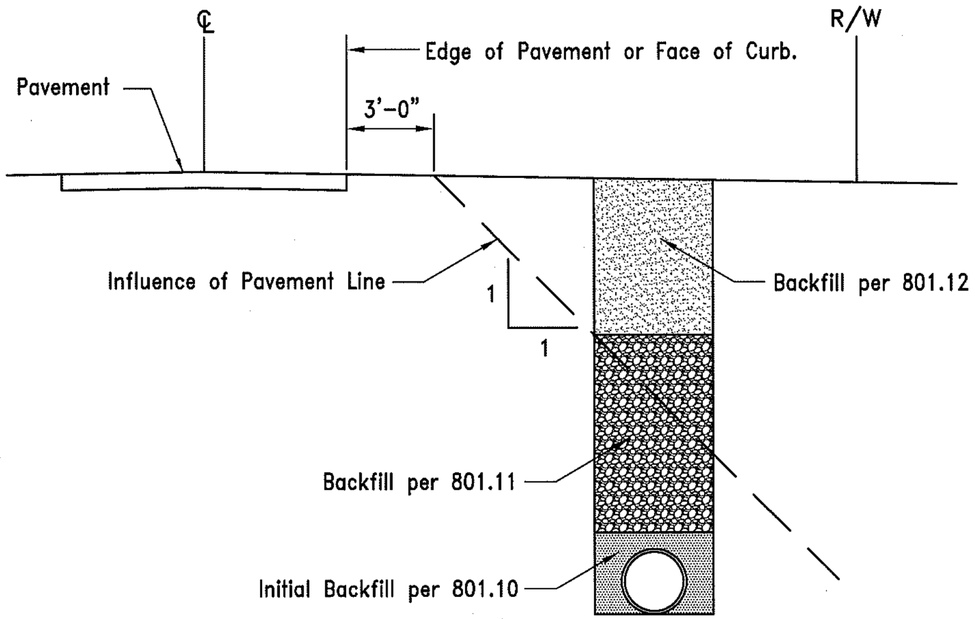

For Trench Details See L-6309A, L-6309B, L-6309C & L-6309D.

L-6309E Revision Date: 1/19/18

CITY OF COLUMBUS DEPARTMENT OF PUBLIC UTILITIES DIVISION OF WATER	STANDARD DETAIL INFLUENCE OF PAVEMENT BACKFILLING WITHIN R/W FOR WATER MAIN AND WATER TAP REPAIRS	L-6309E
APPROVED: R C Westerfield 1-26-18 ADMINISTRATOR DATE		

PIPE SIZE	11.25°				22.5°				45°			
	L"	W"	H"	Vol.	L"	W"	H"	Vol.	L"	W"	H"	Vol.
3"	12	18	12	1.5	13	25	16	3.0	18	30	19	5.9
4"	12	24	16	2.6	16	30	18	5.0	22	36	24	11.0
6"	12	48	18	6.0	15	43	36	13.4	30	55	24	22.9
8"	12	63	24	10.5	18	57	34	20.2	36	57	33	39.2
12"	20	54	36	22.6	37	62	37	49.0	48	62	51	87.9
16"	31	65	38	44.3	60	65	39	88.1	65	65	65	159.2

NOTES:
1. VOLUMES GIVEN IN CUBIC FEET.
2. BACKER TO BE CENTERED HORIZONTALLY ON BEND.
3. STEEL WILL BE USED AS REQUIRED BY THE ENGINEER.
4. ALL NEW PIPE 20" & LARGER SHALL BE RESTRAINED JOINT PER CCMS ITEM 801 UNLESS OTHERWISE PER PLAN OR AS DIRECTED BY THE ENGINEER.
5. EXISTING WATER MAINS 20" AND GREATER MUST HAVE PRIOR APPROVAL FROM DOW TO LOWER UNDER A PROPOSED UTILITY. APPROVAL WILL ONLY BE GIVEN UNDER SPECIAL CIRCUMSTANCES AND CONTINGENT UPON THE CONTRACTOR SUBMITTING A DESIGNED DRAWING, STAMPED BY A PROFESSIONAL ENGINEER, DETAILING HOW THE LOWERED WATER MAIN WILL BE RESTRAINED TO THE EXISTING WATER MAIN.
6. WHERE POLYETHYLENE ENCASEMENT IS REQUIRED, ALL GLANDS & BOLTS SHALL BE WRAPPED PRIOR TO PLACEMENT OF CONCRETE BLOCKING, SEE "L-1003".

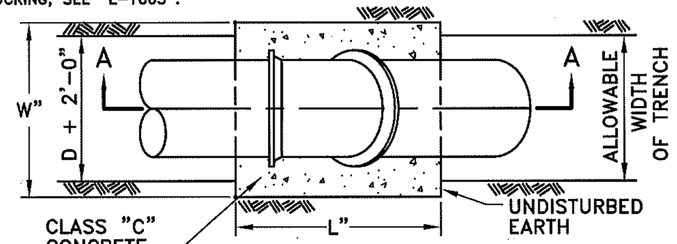

PLAN VIEW

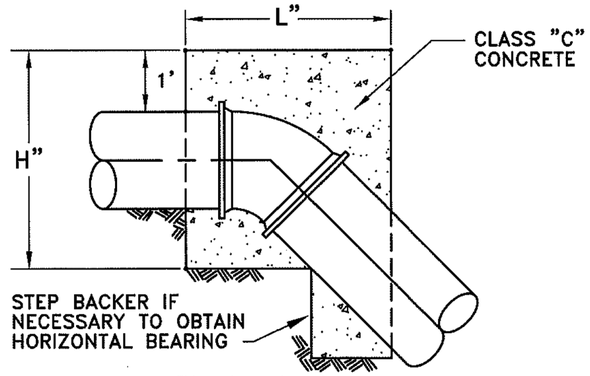

SECTION A-A

L-6310.Dwg Revision Date: 1/19/18

CITY OF COLUMBUS DEPARTMENT OF PUBLIC UTILITIES DIVISION OF WATER	STANDARD DETAIL BACKING FOR VERTICAL BENDS (OVER BENDS ONLY)	L-6310
APPROVED: R C Westerfield 1-26-18 ADMINISTRATOR DATE		

CALCULATED | CHECKED

MISC. DETAILS

FRA-70-14.54

1240
2317

PLOT.CEL
ms consultants, inc.
msconsultants.com
www.msconsultants.com
Ohio DOT Workspace
70\71 East Interchange 2E
PCF: ohdotVBi
PCF: 60-06634_2E_Columbus
Batchplot Spec: \\msconsultants.com\files\production\03\60\06634_2E\standards\plotdrv\batchplt.spc
Pen Table: N:\03\60\06634_2E\standards\tables\V8i_ms_std_06634_2D_Plan View.tbl
Plot Driver: \\msconsultants.com\files\Standards\ustn\ohdot\v8i\ms\plotting\PDF.pltdrv
Model: Sheet @ 9:15:57 AM View: FENCE_VIEW1
Printed: 6/19/2018 By: jdouglas
File: N:\03\60\06634_2E\utilities\sheets\05322l0075.dgn
34" x 22"

SIZE OF PIPE	DEGREE OF BEND											
	11.25°			22.50°			45°			90° (HORZ. ONLY)		
	L"	D"	Vc.f.	L"	D"	Vc.f.	L"	D"	Vc.f.	L"	D"	Vc.f.
3"	4	3	0.1	6	4	0.2	10	4	0.3	10	4	0.3
4"	5	4	0.2	9	5	0.4	14	5	0.6	14	5	0.6
6"	8	6	0.5	12	7	0.7	20	8	1.4	18	9	1.7
8"	9	8	0.7	16	9	1.4	24	12	2.7	25	11	4.0
12"	14	12	1.8	24	14	3.6	36	18	6.8	32	18	10.7
16"	18	16	3.4	32	18	6.7	36	32	13.4	41	26	25.6

STEEL WILL BE USED AS REQUIRED BY ENGINEER

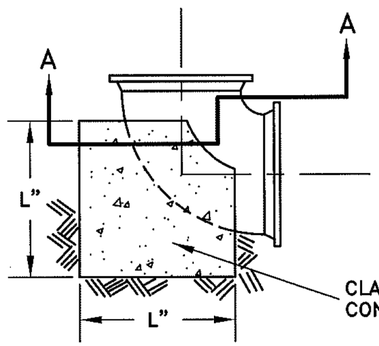

90° BENDS

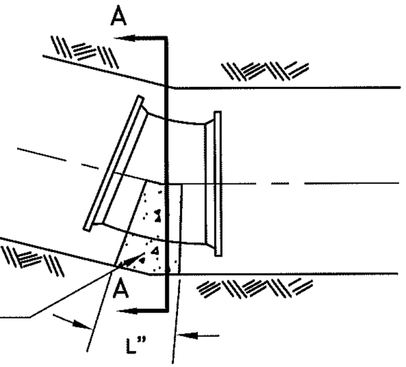

BENDS LESS THAN 90°

NOTES:

1. BACKER DESIGNED FOR 3000 PSF SOIL BEARING.
2. CONCRETE TO BE PLACED AGAINST UNDISTURBED EARTH.
3. ALL NEW PIPE 20" & LARGER SHALL BE RESTRAINED JOINT PER CCMS ITEM 801 UNLESS OTHERWISE INDICATED PER PLAN OR AS DIRECTED BY THE ENGINEER.
4. EXISTING WATER MAINS 20" AND GREATER MUST HAVE PRIOR APPROVAL FROM DOW TO LOWER UNDER A PROPOSED UTILITY. APPROVAL WILL ONLY BE GIVEN UNDER SPECIAL CIRCUMSTANCES AND CONTINGENT UPON THE CONTRACTOR SUBMITTING A DESIGNED DRAWING, STAMPED BY A PROFESSIONAL ENGINEER, DETAILING HOW THE LOWERED WATER MAIN WILL BE RESTRAINED TO THE EXISTING WATER MAIN.
5. PROVIDE CLEARANCE FOR REMOVAL OF BOLTS.

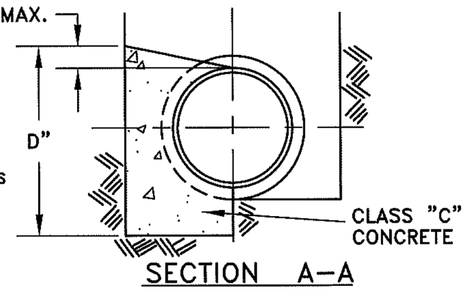

SECTION A–A

L-6311.Dwg Revision Date: 1/19/18

CITY OF COLUMBUS DEPARTMENT OF PUBLIC UTILITIES DIVISION OF WATER	STANDARD DETAIL BACKING FOR BENDS HORIZONTAL AND VERTICAL SAG	L-6311
APPROVED: RC Westerfield 1-26-18 ADMINISTRATOR DATE		

RUN	BRANCH																							
	3"			4"			6"			8"			12"			16"			20"			24"		
	L"	D"	Vc.f.	L"	D"	Vc.f.	L"	D"	Vc.f.	L"	D"	Vc.f.	L"	D"	Vc.f.	L"	D"	Vc.f.	L"	D"	Vc.f.	L"	D"	Vc.f.
3"	12	5	0.5																					
4"	10	6	0.5	11	8	0.8																		
6"	9	7	0.5	11	8	0.8	18	12	1.9															
8"	8	8	0.5	10	9	0.7	18	12	1.9	23	16	3.5												
12"	6	12	0.6	8	12	0.8	18	12	1.9	23	16	3.5	38	22	8.7									
16"							14	16	2.0	20	18	3.3	36	23	8.7	49	30	13.6						
20"							11	20	1.9	18	20	3.3	35	24	8.7	46	32	13.6	60	38	26.5			
24"							9	24	1.9	15	24	3.3	30	28	8.7	42	36	14.0	54	42	26.3	68	48	45.4

STEEL WILL BE USED AS REQUIRED BY THE ENGINEER

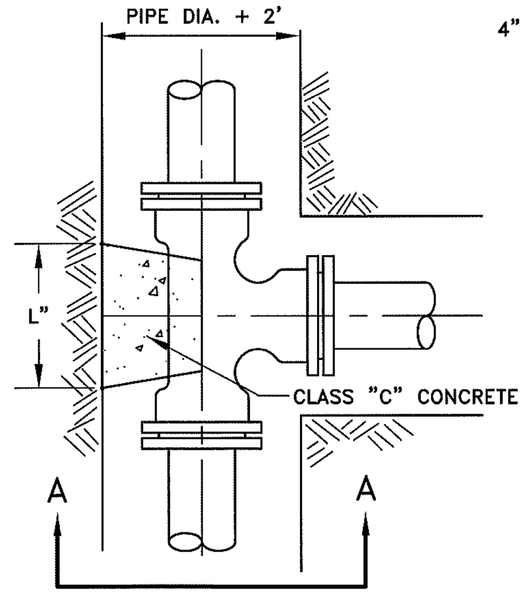

PLAN VIEW

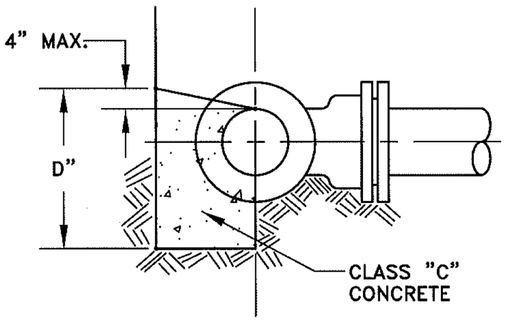

SECTION A–A

NOTES:

1. BACKER DESIGNED FOR 3000 PSF SOIL BEARING.
2. CONCRETE TO BE PLACED AGAINST UNDISTURBED EARTH.
3. PROVIDE CLEARANCE FOR REMOVAL OF BOLTS.

L-6312.Dwg Revision Date: 1/2/13

CITY OF COLUMBUS DEPARTMENT OF PUBLIC UTILITIES DIVISION OF WATER	STANDARD DETAIL BACKING FOR TEES	L-6312
APPROVED: RC Westerfield 1-26-18 ADMINISTRATOR DATE		

CALCULATED | CHECKED

MISC. DETAILS

FRA-70-14.54

1241
2317

ms consultants, inc.

PLOT.CEL
ms consultants, inc.
msconsultants.com
www.msconsultants.com
Ohio DOT Workspace
70\71 East Interchange 2E
PCF: ohdot\V8i
PCF: 60-06634_2E_Columbus
Batchplot Spec: \\msconsultants.com\files\production\03\60\06634_2E\standards\plotdrv\batchplt.spc
Pen Table: N:\03\60\06634_2E\standards\tables\V8i_ms_std_06634_2D_Plan View.tbl
Plot Driver: \\msconsultants.com\files\Standards\ustn\ohdot\v8i\ms\plotting\PDF.pltcfg
Model: Sheet @ 9:16:10 AM View: FENCE_VIEW1
Printed: 6/19/2018 By: jdouglas
File: N:\03\60\06634_2E\utilities\sheets\l053220076.dgn
34" x 22"

NOTE:
AVERAGE WEIGHTS TO NEAREST EVEN LB. CALCULATED USING 0.26 LB/CU. IN.

NOTE:
NO MORE THAN ONE VALVE STEM SLEEVE PERMITTED PER VALVE SETTING.

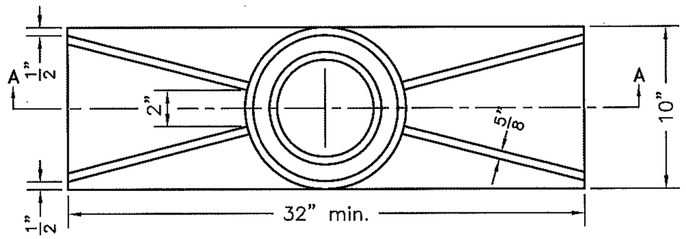

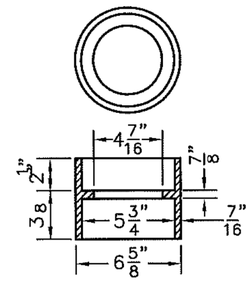

VALVE STEM SLEEVE
14 LBS.

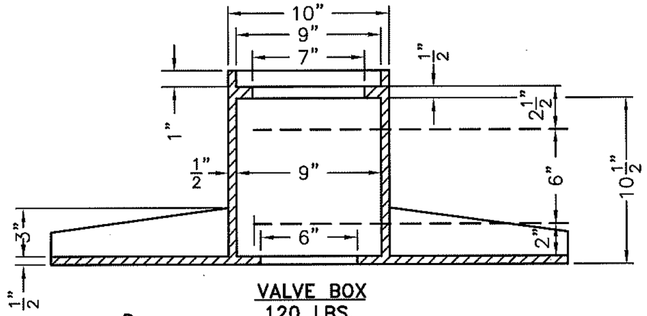

VALVE BOX
120 LBS.

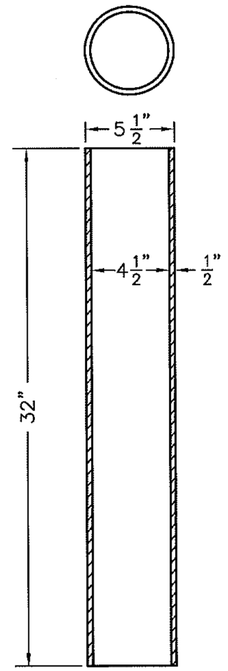

VALVE STEM
65 LBS.
(or 5" C.I. Pipe–ASA022)

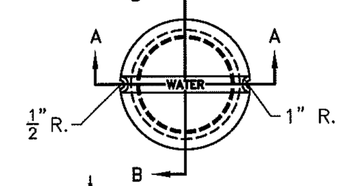

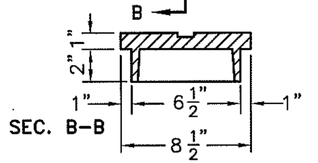

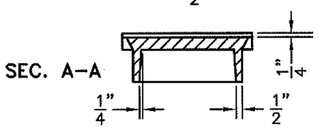

VALVE BOX LID
17 LBS.

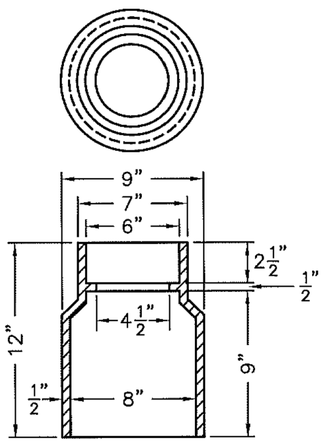

VALVE BOX BASE
41 LBS.

CITY OF COLUMBUS DEPARTMENT OF PUBLIC UTILITIES DIVISION OF WATER	STANDARD DETAIL COLUMBUS STANDARD HEAVY DUTY VALVE BOX	L-6316A
APPROVED: R C Westerfield 1-26-18 ADMINISTRATOR DATE		

L-6316a.Dwg Revision Date: 1/2/13

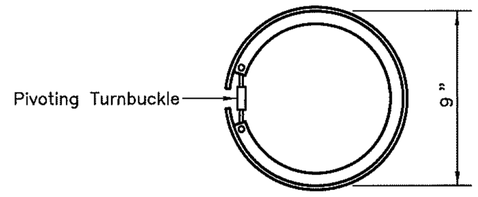

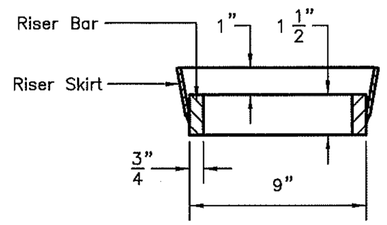

VALVE BOX RISER (1 1/2" Shown)
(Can vary from 1" to 3")

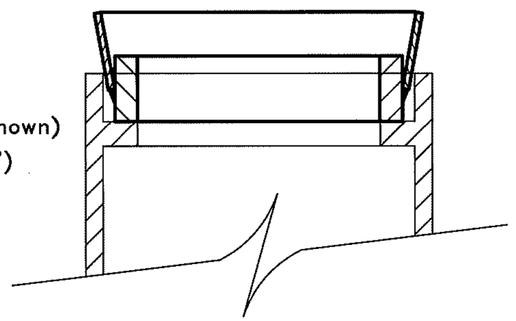

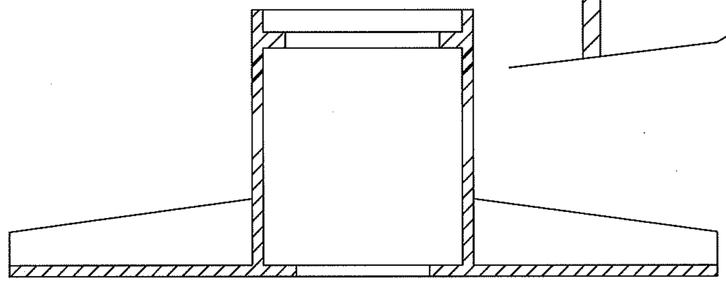

VALVE BOX
FOR DETAILS SEE "L-6316A"

NOTES:

1. FOR USE ON EXISTING VALVE BOXES ONLY, NOT PERMITTED FOR USE WITH NEW VALVE BOX INSTALLATIONS.
2. NOT MORE THAN 1 RISER SHALL BE PERMITTED AT ANY ONE (1) SETTING. SHOULD THE REQUIRED ADJUSTMENT BE MORE THAN THIS THEN THE ADJUSTMENT SHALL BE MADE TO THE VALVE STEM.

CITY OF COLUMBUS DEPARTMENT OF PUBLIC UTILITIES DIVISION OF WATER	STANDARD DETAIL RISER FOR USE W/ EXISTING COLUMBUS STANDARD HEAVY DUTY VALVE BOX	L-6316B
APPROVED: R C Westerfield 1-26-18 ADMINISTRATOR DATE		

L-6316b.Dwg Revision Date: 1/11/13

CALCULATED | CHECKED

MISC. DETAILS

FRA-70-14.54

1242
2317

ms consultants, inc.

PLOT.CEL
ms consultants, inc.
msconsultants.com
www.msconsultants.com
Ohio DOT Workspace
70\71 East Interchange 2E
PCF: ohdotV8i
PCF: 60-06634_2E_Columbus
Batchplot Spec: \\msconsultants.com\Files\production\03\60\06634_2E\standards\plotdrv\batchplt.spc
Pen Table: N:\03\60\06634_2E\standards\tables\V8i_ms_std_06634_2D_Plan View.tbl
Plot Driver: \\msconsultants.com\Files\Standards\usetn\ohdot\v8i\ms\plotting\PDF.pltcfg
Model: Sheet
Printed: 6/19/2018 @ 9:16:25 AM
File: N:\03\60\06634_2E\utilities\sheets\053220007?.dgn
View: FENCE_VIEW1
By: jdouglas
34" x 22"

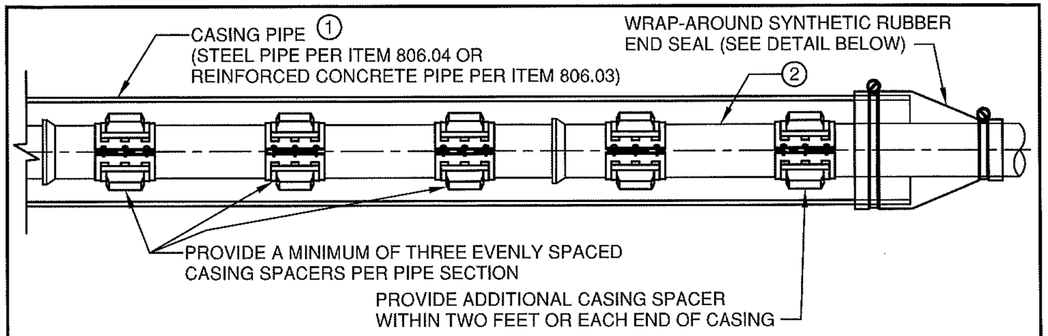

SIZE WATER MAIN	MAX. BELL O.D.	MIN. SMOOTH STEEL CASING PIPE REQ'D.
6"	10.19"	16"
8"	13.19"	18"
12"	17.25"	24"
16"	22.38"	30"
20"	27.25"	36"
24"	31.56"	42"
30"	38.75"	48"
36"	45.00"	54"
42"	51.25"	60"
48"	58.00"	66"
54"	65.63"	72"
60"	72.38"	84"

① CASING PIPE SIZE BASED ON TYPICAL BELL O.D. OF D.I. RESTRAINED JOINT PIPE MANUFACTURED AND NOMINAL CONCRETE PIPE SIZE.

② RESTRAINED JOINT DUCTILE IRON PIPE PER DIVISION OF WATER APPROVED MATERIALS LIST.

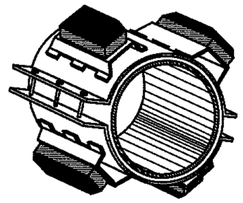

* NUMBER OF RUNNERS/RISERS PER MANUFACTURER'S STANDARD.

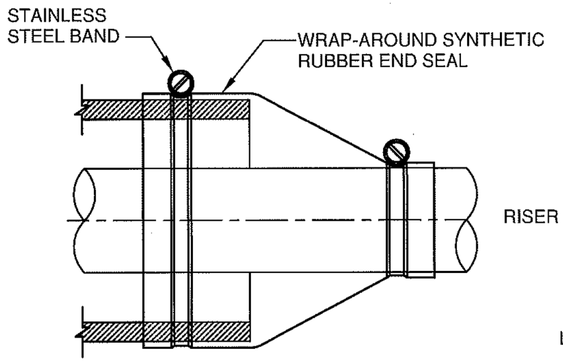

END SEAL

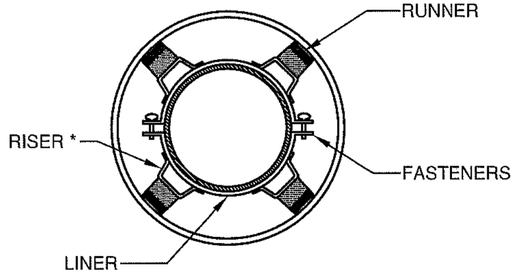

CENTERED AND
RESTRAINED CASING SPACER

L-6324A.Dwg Revision Date: 1/19/18

CITY OF COLUMBUS DEPARTMENT OF PUBLIC UTILITIES DIVISION OF WATER	STANDARD DETAIL CASING PIPE, SPACERS AND END SEALS	L-6324
APPROVED: RC Westerfield 1-26-18 ADMINISTRATOR DATE		

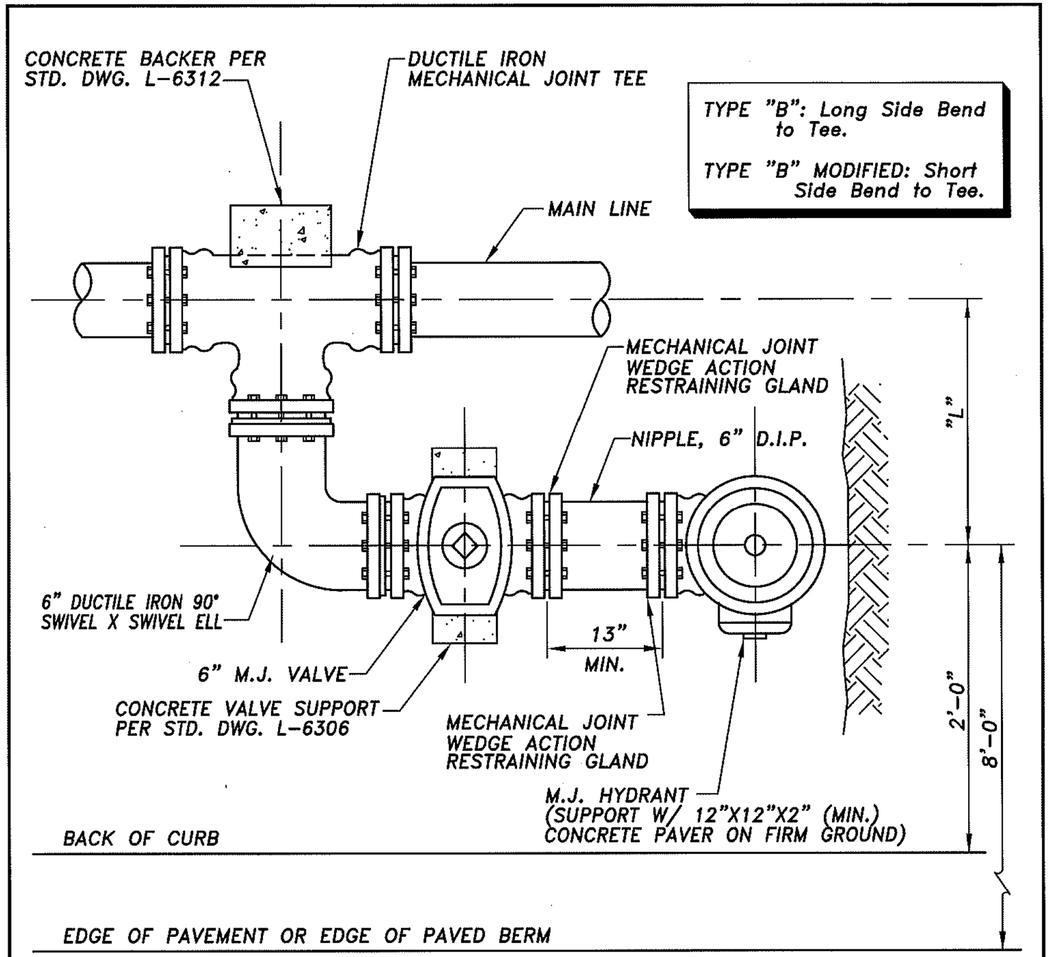

MAIN LINE	DIMENSION "L"	
	TYPE "B"	TYPE "B" MOD.
6"	24"	19"
8"	25"	20"
12"	28"	23"
16"	31"	26"
20"	33"	28"
24"	36"	31"
30"	39"	34"

NOTES:

1. FIRE HYDRANT SHALL HAVE A MAXIMUM BURY OF 7'-0". MODIFICATION OF THE HYDRANT LEAD TO MEET THIS REQUIREMENT SHALL BE IN THAT SECTION FROM THE VALVE TO THE HYDRANT AS PER STANDARD DETAIL L-7601.
2. FIRE HYDRANTS SHALL BE SET A MINIMUM OF 6' FROM ALL DRIVEWAY OPENINGS.
3. TEE USED TO CONNECT HYDRANT LEAD TO WATER MAIN IS INCLUDED IN COST OF ITEM 809, FIRE HYDRANT.

L-6409 A.Dwg Revision Date: 1/19/18

CITY OF COLUMBUS DEPARTMENT OF PUBLIC UTILITIES DIVISION OF WATER	STANDARD DETAIL TYPICAL HYDRANT SETTING TYPE "B" AND "B" MODIFIED FOR MECHANICAL JOINT TEES	L-6409A
APPROVED: RC Westerfield 1-26-18 ADMINISTRATOR DATE		

CALCULATED | CHECKED

MISC. DETAILS

FRA-70-14.54

1243
2317

ms consultants, inc.

PLOT.CEL
ms consultants, inc.
msconsultants.com
www.msconsultants.com
Ohio DOT Workspace
70\71 East Interchange 2E
PCF: 60-06634_2E_Columbus
PCF: ohdot\V8i
Batchplot Spec: \\msconsultants.com\files\production\03\60\06634_2E\standards\plotdrv\batchplt.spc
Pen Table: N:\03\60\06634_2E\standards\tables\V8i_ms_std_06634_2D_Plan View.tbl
Plot Driver: \\msconsultants.com\files\Standards\ustn\ohdot\v8i\ms\plotting\PDF.pltcfg
File: N:\03\60\06634_2E\utilities\sheets\105322000178.dgn
Model: Sheet
Printed: 6/19/2018 @ 9:16:38 AM
By: jdouglas
View: FENCE_VIEW1
34" x 22"

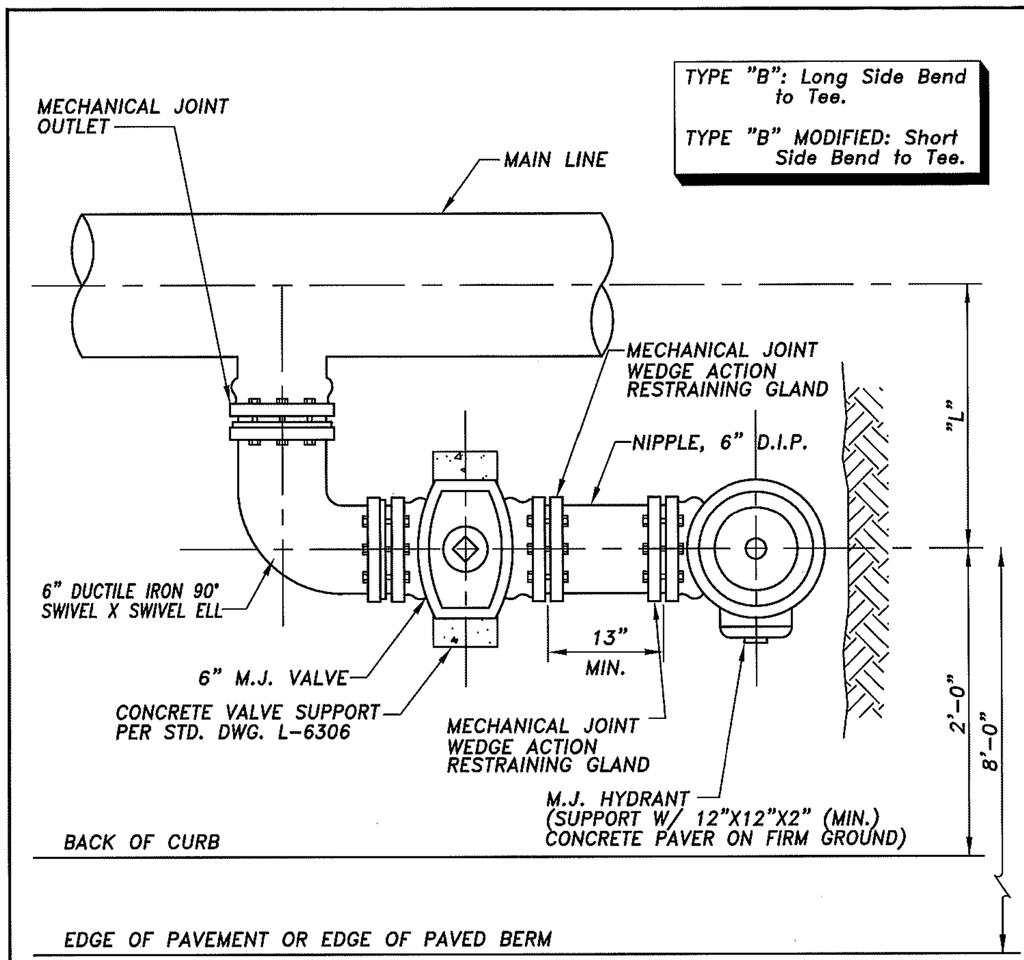

MAIN LINE	DIMENSION "L"	
	TYPE "B"	TYPE "B" MOD.
20"	33"	28"
24"	36"	31"
30"	39"	34"
36"	43"	38"
42"	46"	41"
48"	49"	44"

NOTES:

1. FIRE HYDRANT SHALL HAVE A MAXIMUM BURY OF 7'-0". MODIFICATION OF THE HYDRANT LEAD TO MEET THIS REQUIREMENT SHALL BE IN THAT SECTION FROM THE VALVE TO THE HYDRANT AS PER STANDARD DETAIL L-7601.
2. FIRE HYDRANTS SHALL BE SET A MINIMUM OF 6' FROM ALL DRIVEWAY OPENINGS.
3. TEE USED TO CONNECT HYDRANT LEAD TO WATER MAIN IS INCLUDED IN COST OF ITEM 809, FIRE HYDRANT.

L-5409 B.Dwg Revision Date: 1/19/18

CITY OF COLUMBUS
DEPARTMENT OF PUBLIC UTILITIES
DIVISION OF WATER

APPROVED: R C Westerfield 1-26-18
ADMINISTRATOR DATE

STANDARD DETAIL
TYPICAL HYDRANT SETTING
TYPE "B" AND "B" MODIFIED
FOR CONCRETE AND STEEL PIPE

L-6409B

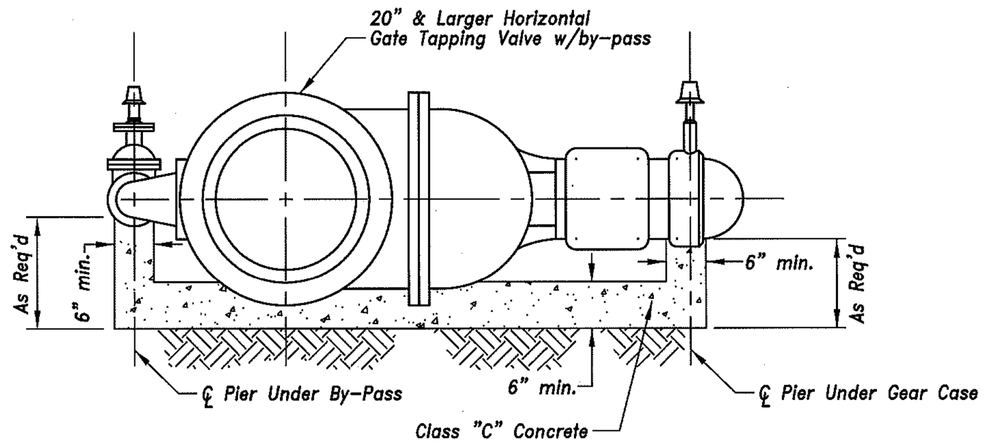

NOTES:

Dimensions shall be varied as directed to suit make of valve furnished.

Width shall be as required to allow access to bolts. (6" min.)

When installing horizontal gate valves, the operator shall be set on either the south or east side of the proposed water main.

L-6617.Dwg Revision Date: 1/2/13

CITY OF COLUMBUS
DEPARTMENT OF PUBLIC UTILITIES
DIVISION OF WATER

APPROVED: R C Westerfield 1-26-18
ADMINISTRATOR DATE

STANDARD DETAIL
CONCRETE VALVE SUPPORT
FOR HORIZONTAL
GATE TAPPING VALVE w/BY-PASS

L-6617

CALCULATED | CHECKED

MISC. DETAILS

FRA-70-14.54

1244
2317

ms consultants, inc.

PLOT.CEL
ms consultants, inc.
msconsultants.com
www.msconsultants.com
Ohio DOT Workspace
70\71 East Interchange 2E
PCF: 60-06634_2E_Columbus
PDF: ohdot\V8i
Batchplot Spec: \\msconsultants.com\files\production\03\60\06634_2E\standards\plotdrv\batchplt.spc
Pen Table: N:\03\60\06634_2E\standards\tables\V8i_ms_std_06634_2D_Plan View.tbl
Plot Driver: \\msconsultants.com\files\Standards\ustn\ohdot\v8i\ms\plotting\PDF.pltcfg
File: N:\03\60\06634_2E\utilities\sheets\05322\0079.dgn
Model: Sheet
Printed: 6/19/2018 @ 9:16:52 AM
View: FENCE_VIEW1
By: jdoughss
34" x 22"
CALCULATED
CHECKED

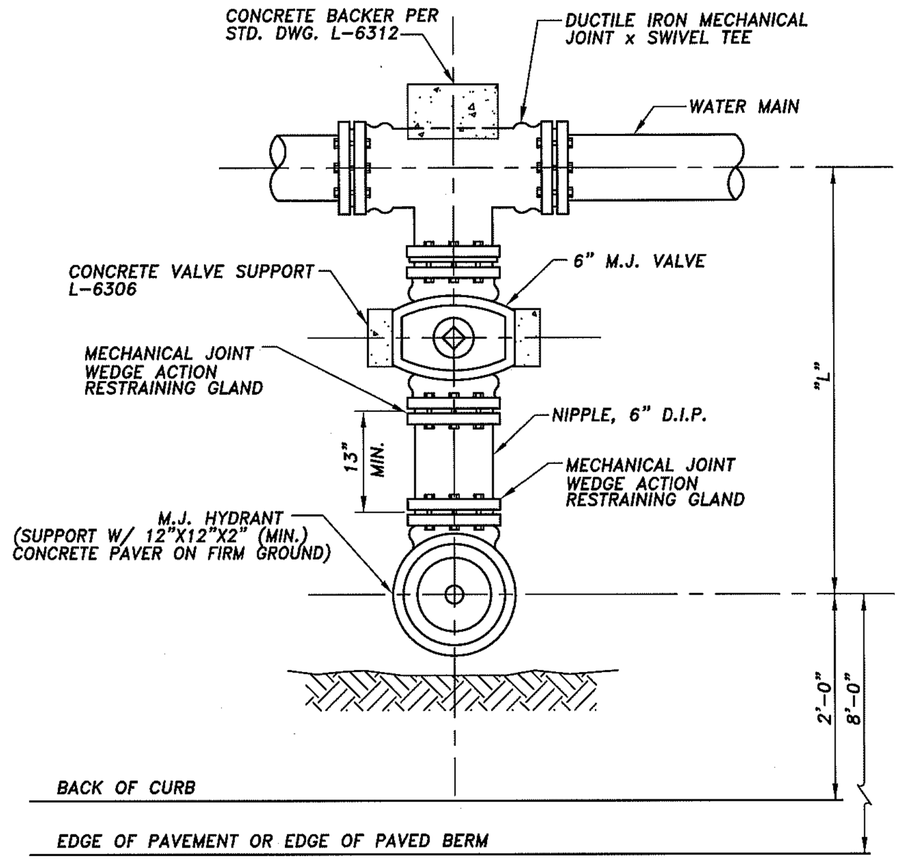

MAIN LINE	DIMENSION "L" TYPE "A"
6"	39"
8"	40"
12"	43"
16"	46"
20"	58"
24"	61"
30"	64"

NOTES:

1. FIRE HYDRANT SHALL HAVE A MAXIMUM BURY OF 7'-0". MODIFICATION OF THE HYDRANT LEAD TO MEET THIS REQUIREMENT SHALL BE IN THAT SECTION FROM THE VALVE TO THE HYDRANT AS PER STANDARD DETAIL L-7601.
2. FIRE HYDRANTS SHALL BE SET A MINIMUM OF 6' FROM ALL DRIVEWAY OPENINGS.
3. TEE USED TO CONNECT HYDRANT LEAD TO WATER MAIN IS INCLUDED IN COST OF ITEM 809, FIRE HYDRANT.

L-6637A.dwg Revision Date: 1/19/18

CITY OF COLUMBUS
DEPARTMENT OF PUBLIC UTILITIES
DIVISION OF WATER

APPROVED: RC Westerfield 1-26-18
ADMINISTRATOR DATE

STANDARD DETAIL
TYPICAL TYPE "A" HYDRANT SETTING
FOR DUCTILE IRON
MECHANICAL JOINT x SWIVEL TEES

L-6637A

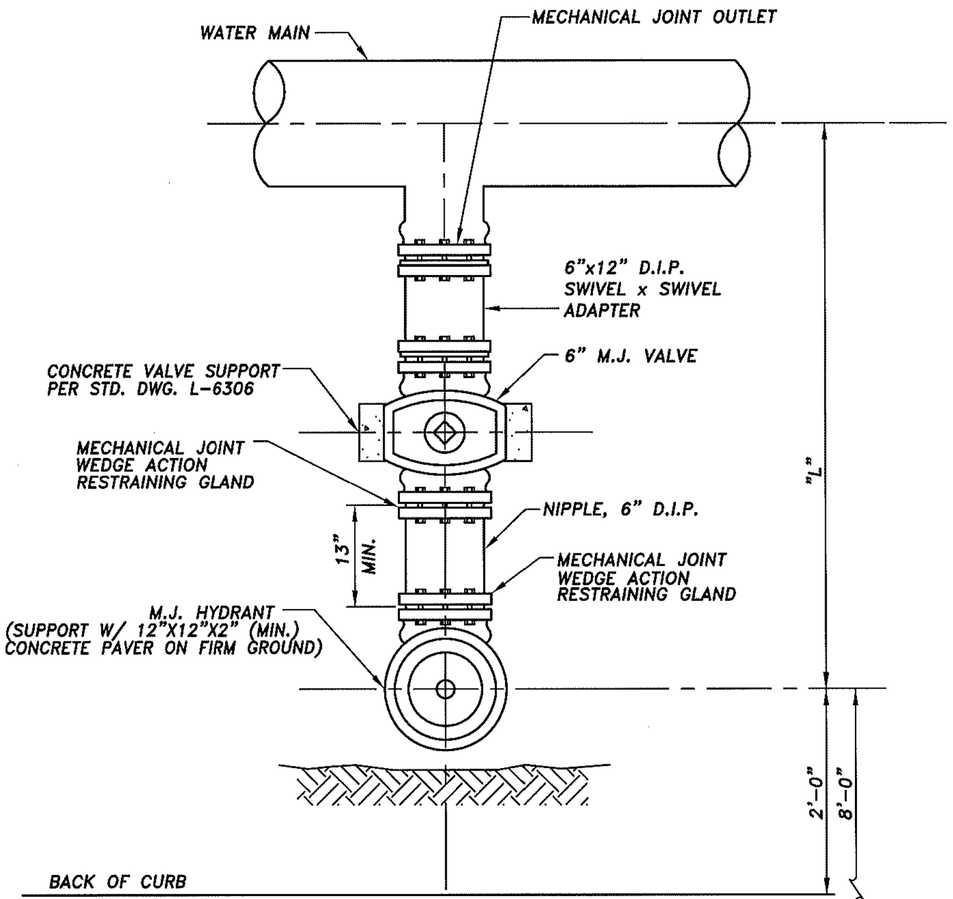

MAIN LINE	DIMENSION "L" TYPE "A"
20"	58"
24"	61"
30"	64"
36"	68"
42"	71"
48"	74"

NOTES:

1. FIRE HYDRANT SHALL HAVE A MAXIMUM BURY OF 7'-0". MODIFICATION OF THE HYDRANT LEAD TO MEET THIS REQUIREMENT SHALL BE IN THAT SECTION FROM THE VALVE TO THE HYDRANT AS PER STANDARD DETAIL L-7601.
2. FIRE HYDRANTS SHALL BE SET A MINIMUM OF 6' FROM ALL DRIVEWAY OPENINGS.
3. TEE USED TO CONNECT HYDRANT LEAD TO WATER MAIN IS INCLUDED IN COST OR ITEM 809, FIRE HYDRANT.

L-6637B.dwg Revision Date: 1/19/18

CITY OF COLUMBUS
DEPARTMENT OF PUBLIC UTILITIES
DIVISION OF WATER

APPROVED: RC Westerfield 1-26-18
ADMINISTRATOR DATE

STANDARD DETAIL
TYPICAL TYPE "A" HYDRANT SETTING
FOR CONCRETE AND STEEL PIPE

L-6637B

MISC. DETAILS

FRA-70-14.54

1245
2317

PLOT.CEL
ms consultants, inc.
msconsultants.com
www.msconsultants.com
Ohio DOT Workspace
70\71 East Interchange 2E
PCF: ohdot\V8i
PCF: 60-06634_2E_Columbus
Batchplot Spec: \\msconsultants.com\files\production\03\60\06634_2E\standards\plotdrv\batchplt.spc
Pen Table: N:\03\60\06634_2E\standards\tables\V8i_ms_std_06634_2D_Plan View.tbl
Plot Driver: \\msconsultants.com\files\Standards\usetn\ohdot\v8i\ms\plotting\PDF.pltcfg
Model: Sheet
Printed: 6/19/2018 @ 9:17:06 AM
File: N:\03\60\06634_2E\utilities\sheets\105322D080.dgn
View: FENCE_VIEW1
By: jdouglas
34" x 22"

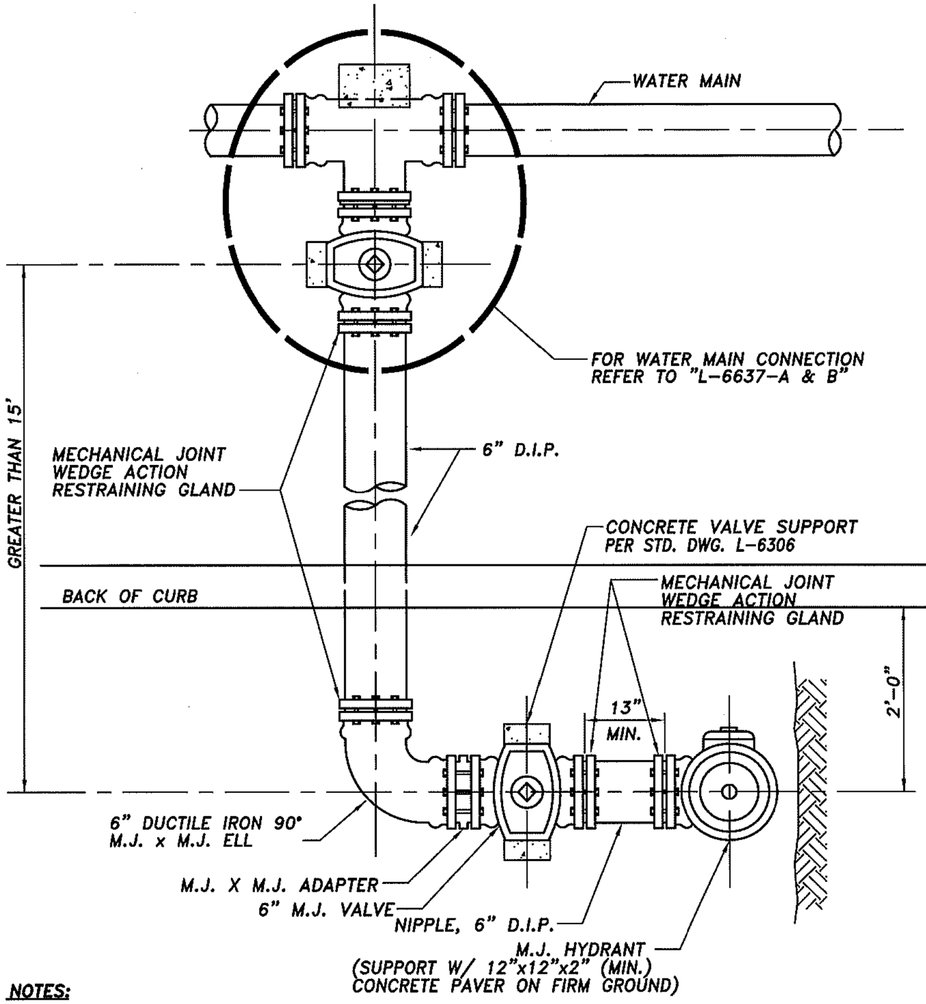

NOTES:

1. FIRE HYDRANT SHALL HAVE A MAXIMUM BURY OF 7'-0". MODIFICATION OF THE HYDRANT LEAD TO MEET THIS REQUIREMENT SHALL BE IN THAT SECTION FROM THE VALVE TO THE HYDRANT AS PER STANDARD DETAIL L-7601.
2. FIRE HYDRANTS SHALL BE SET A MINIMUM OF 6' FROM ALL DRIVEWAY OPENINGS.
3. TEE USED TO CONNECT THE HYDRANT LEAD TO WATER MAIN IS INCLUDED IN COST OF ITEM 809, FIRE HYDRANT.

L-6637C.dwg Revision Date: 1/19/18

CITY OF COLUMBUS DEPARTMENT OF PUBLIC UTILITIES DIVISION OF WATER	STANDARD DETAIL TYPICAL TYPE "A" MODIFIED HYDRANT SETTING (DOUBLE VALVE SET UP IN CURB)	L-6637C
APPROVED: RC Westerfield 1-26-18 ADMINISTRATOR DATE		

LENGTH OF PIPE	GALLONS PER HOUR												
	6" Pipe	8" Pipe	12" Pipe	16" Pipe	20" Pipe	24" Pipe	30" Pipe	36" Pipe	42" Pipe	48" Pipe	54" Pipe	60" Pipe	66" Pipe
50	0.02	0.03	0.05	0.07	0.08	0.10	0.12	0.15	0.17	0.20	0.22	0.25	0.27
100	0.05	0.07	0.10	0.13	0.17	0.20	0.25	0.30	0.35	0.40	0.45	0.50	0.55
200	0.10	0.13	0.20	0.26	0.33	0.40	0.50	0.60	0.70	0.79	0.89	0.99	1.09
300	0.15	0.20	0.30	.040	0.50	0.60	0.74	0.89	1.04	1.19	1.34	1.49	1.64
400	0.20	0.26	0.40	0.53	0.66	0.79	0.99	1.19	1.39	1.59	1.79	1.99	2.18
500	0.25	0.33	0.50	0.66	0.83	0.99	1.24	1.49	1.74	1.99	2.23	2.48	2.73
600	0.30	0.40	0.60	0.79	0.99	1.19	1.49	1.79	2.09	2.38	2.68	2.98	3.28
700	0.35	0.46	0.70	0.93	1.16	1.39	1.74	2.09	2.43	2.78	3.13	3.48	3.82
800	0.40	0.53	0.79	1.06	1.32	1.59	1.99	2.38	2.78	3.18	3.57	3.97	4.37
900	0.45	0.60	0.89	1.19	1.49	1.79	2.23	2.68	3.13	3.57	4.02	4.47	4.92
1000	0.50	0.66	0.99	1.32	1.66	1.99	2.48	2.98	3.48	3.97	4.47	4.97	5.46
2500	1.24	1.66	2.48	3.31	4.14	4.97	6.21	7.45	8.69	9.93	11.17	12.41	13.65
5000	2.48	3.31	4.97	6.62	8.28	9.93	12.41	14.90	17.38	19.86	22.34	24.83	27.31
7500	3.72	4.97	7.45	9.93	12.41	14.90	18.62	22.34	26.07	29.79	33.51	37.24	40.96
10000	4.97	6.62	9.93	13.24	16.55	19.86	24.83	29.79	34.76	39.72	44.69	49.65	54.62

FORMULA: $L = \frac{SD\sqrt{P}}{148{,}000}$

Where:
L = Allowable Leakage (gal./hr.)
S = Length of pipe tested in feet.
D = Nominal pipe diameter in inches.
P = Test pressure (150 psi)

When testing against closed metal-seated valves, an additional leakage per closed valve of 0.0078 gal./hr./in. of nominal valve size will be allowed.

These calculations are based on "AWWA C-600-10" Specifications, Section 4, Hydrostatic Testing, Dated December 1, 2005.

L-6640.Dwg Revision Date: 3/5/13

CITY OF COLUMBUS DEPARTMENT OF PUBLIC UTILITIES DIVISION OF WATER	STANDARD DETAIL ALLOWABLE LEAKAGE TABLE	L-6640
APPROVED: RC Westerfield 1-26-18 ADMINISTRATOR DATE		

CALCULATED | CHECKED

MISC. DETAILS

FRA-70-14.54

1246
2317

PLOT.CEL
ms consultants, inc.
msconsultants.com
www.msconsultants.com
Ohio DOT Workspace
70\71 East Interchange 2E
PCF: 60-06634_2E_Columbus
PDF: ohdot\V8i
Batchplot Spec: \\msconsultants.com\files\production\03\60\06634_2E\standards\plotdrv\batchplt.spc
Pen Table: N:\03\60\06634_2E\standards\tables\V8i_ms_std_06634_2D_Plan View.tbl
Plot Driver: \\msconsultants.com\files\Standards\usetn\ohdot\v8i\ms\plotting\PDF.pltcfg
Model: Sheet
Printed: 6/19/2018 @ 9:17:20 AM
File: N:\03\60\06634_2E\utilities\sheets\105220008I.dgn
View: FENCE_VIEW1
By: jdouglas
34" x 22"

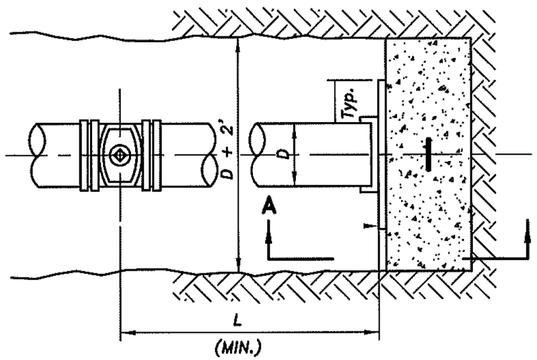

PLAN VIEW

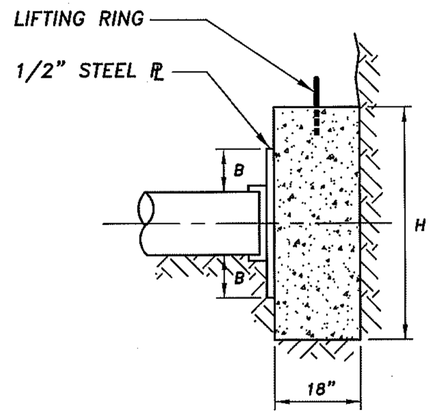

SECTION A-A

PIPE DIAMETER (D)	H	B	L	VOLUME CU-FT
3"	5"	1"	10'	1.43
4"	6"	1"	10'	1.76
6"	8"	1"	10'	2.52
8"	12"	1"	10'	4.00
12"	23"	3"	18'	8.64
16"	37"	3"	18'	15.39

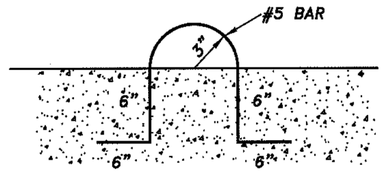

LIFT RING DETAIL

NOTES:

1. BACKER DESIGNED FOR 3000 PSF SOIL BEARING.
2. END OF PIPE CAPPED OR PLUGGED.
3. GREASE STEEL PLATE WHERE IN CONTACT WITH CONCRETE BACKER.
4. PLACE CONCRETE AGAINST UNDISTURBED SOIL.
5. THOROUGHLY COMPACT BACKFILL BETWEEN VALVE AND END OF PIPE.
6. FOR WATER MAINS 20" AND GREATER, A THRUST RESTRAINT SYSTEM FOR DEAD END PIPE MUST BE DESIGNED BASED UPON EXISTING SITE CONDITIONS AND PROJECT REQUIREMENTS. DESIGN DRAWINGS AND CALCULATIONS SHALL BE PREPARED BY A PROFESSIONAL ENGINEER AND BE SUBMITTED TO DOW FOR REVIEW.

L-7001.Dwg Revision Date: 1/19/18

CITY OF COLUMBUS DEPARTMENT OF PUBLIC UTILITIES DIVISION OF WATER	STANDARD DETAIL THRUST BLOCK DETAIL END OF PIPE	L-7001
APPROVED: R C Westerfield 1-26-18 ADMINISTRATOR DATE		

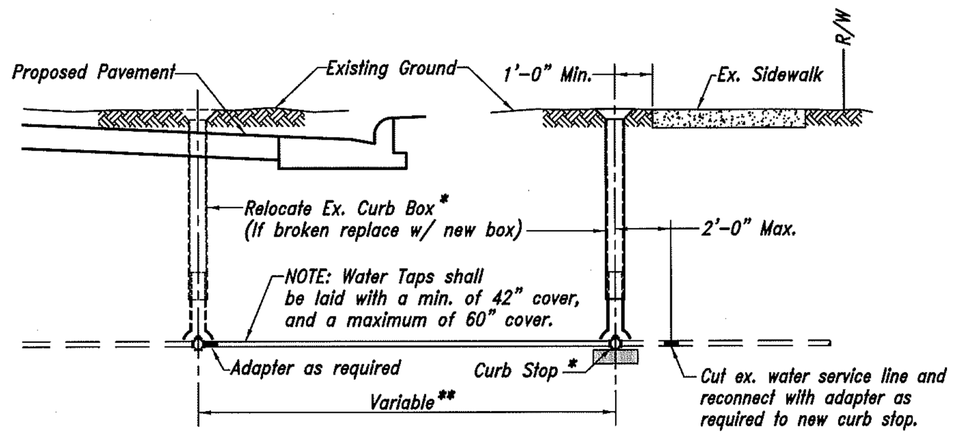

* NOTE:
For reference in placing new curb stops and relocated curb boxes see L-9901.

Detail "A"
(w/ Sidewalk)

** NOTE:
Should Poly tubing, Galvanized or Lead material be encountered the entire Water Tap shall be replaced w/ Copper from the existing Corporation Stop to the new Curb Stop. Pipe shall be Copper Tubing Size (C.T.S.).

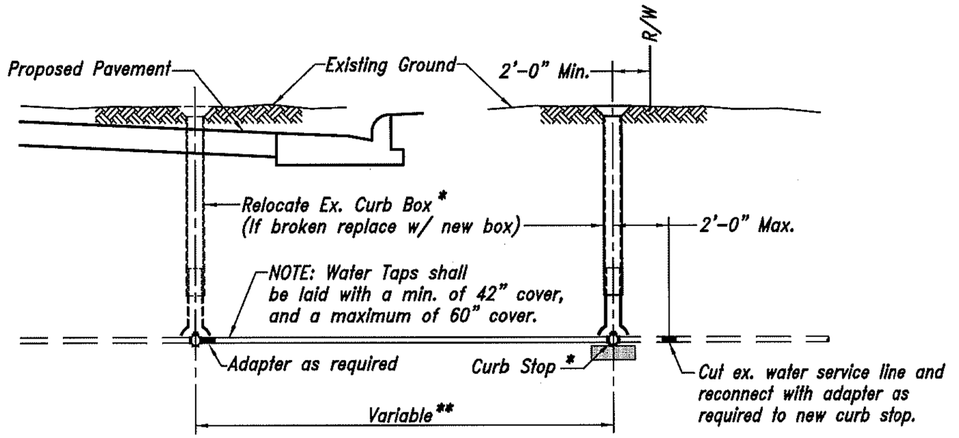

Detail "B"
(w/o Sidewalk)

L-7102A.Dwg Revision Date: 1/19/18

CITY OF COLUMBUS DEPARTMENT OF PUBLIC UTILITIES DIVISION OF WATER	STANDARD DETAIL WATER TAP EXTENSION AND CURB BOX RELOCATION	L-7102A
APPROVED: R C Westerfield 1-26-18 ADMINISTRATOR DATE		

CALCULATED | CHECKED

MISC. DETAILS

FRA-70-14.54

1247
2317

ms consultants, inc.

PLOT.CEL
ms consultants, inc.
msconsultants.com
www.msconsultants.com
Ohio DOT Workspace
70\71 East Interchange 2E
PCF: ohdot\V8i
PCF: 60-06634_2E_Columbus
Batchplot Spec: \\msconsultants.com\files\production\03\60\06634_2E\standards\plotdrv\batchplt.spc
Pen Table: N:\03\60\06634_2E\standards\tables\V8i_ms_std_06634_2D_Plan View.tbl
Plot Driver: \\msconsultants.com\files\Standards\ustn\ohdot\v8i\ms\plotting\PDF.pltcfg
Model: Sheet @ 9:17:34 AM View: FENCE_VIEW1
Printed: 6/19/2018 By: jdouglas
File: N:\03\60\06634_2E\utilities\sheets\105220082.dgn
34" x 22"

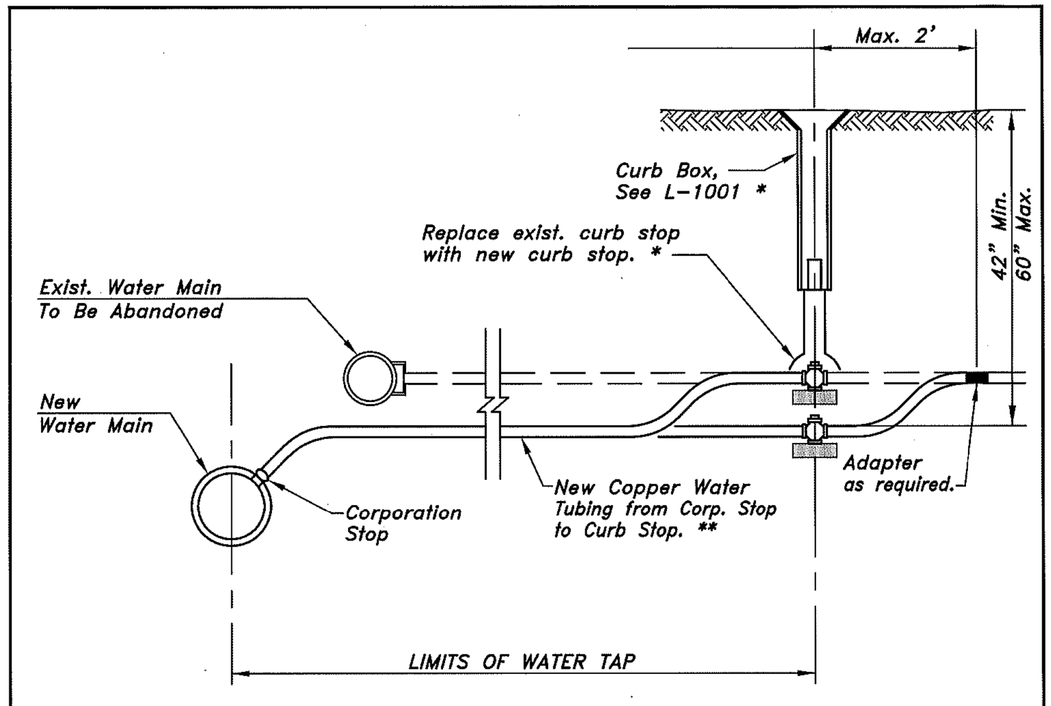

ALL WATER TAPS 2 INCHES AND UNDER SHALL BE TYPE "K" COPPER MEETING THE REQUIREMENTS OF SECTION 805.03.

CONTRACTOR SHALL REPLACE ANY DAMAGED CURB BOX ENCOUNTERED IN TRANSFERRING WATER SERVICE LINES AS DETERMINED BY THE ENGINEER. REFER TO THE GENERAL NOTES FOR ESTIMATED CONTINGENCY QUANTITIES WHICH HAVE BEEN INCLUDED IN THE QUANTITY SUMMARY FOR REPLACING DAMAGED CURB BOXES.

ANY CURB BOXES DAMAGED BY THE CONTRACTOR SHALL BE REPLACED BY THE CONTRACTOR AT NO ADDITIONAL COST TO THE CITY.

* FOR REFERENCE IN PLACING NEW CURB STOPS AND CURB BOXES SEE "L-9901".

** PIPE SHALL BE COPPER TUBING SIZE (C.T.S.)

L-7102B.Dwg Revision Date: 1/19/18

CITY OF COLUMBUS DEPARTMENT OF PUBLIC UTILITIES DIVISION OF WATER	STANDARD DETAIL ITEM 805 WATER SERVICE LINE TRANSFER	L-7102B
APPROVED: RC Westerfield 1-26-18 ADMINISTRATOR DATE		

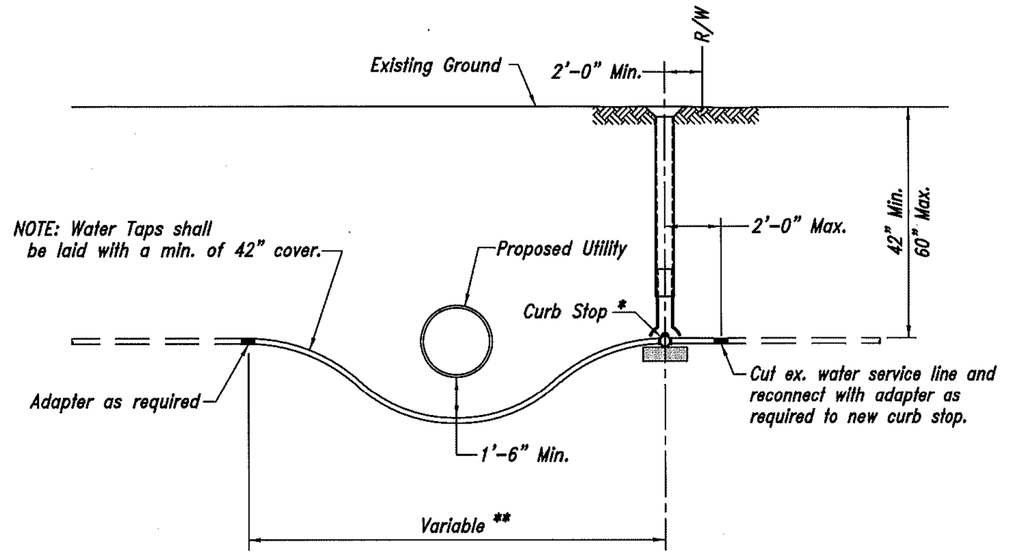

* **NOTE:**
For reference in placing new curb stops and relocated curb boxes see L-9901.

** **NOTE:**
Should Poly tubing, Galvanized or Lead material be encountered the entire Water Tap shall be replaced w/ Copper from the existing Corporation Stop to the new Curb Stop. Pipe Shall Be Copper Tubing Size (C.T.S.).

L-7102C.Dwg Revision Date: 1/19/18

CITY OF COLUMBUS DEPARTMENT OF PUBLIC UTILITIES DIVISION OF WATER	STANDARD DETAIL WATER TAP RELOCATION	L-7102C
APPROVED: RC Westerfield 1-26-18 ADMINISTRATOR DATE		

CALCULATED | CHECKED

MISC. DETAILS

FRA-70-14.54

1248
2317

ms consultants, inc.

PLOT.CEL
ms consultants, inc.
msconsultants.com
www.msconsultants.com
Ohio DOT Workspace
70\71 East Interchange 2E
PCF: ohdot\V8i
PCF: 60-06634_2E_Columbus
Batchplot Spec: \\msconsultants.com\files\production\03\60\06634_2E\standards\plotdrv\batchplt.spc
Pen Table: N:\03\60\06634_2E\standards\tables\V8i_ms_std_06634_2D_Plan View.tbl
Plot Driver: \\msconsultants.com\files\Standards\usetn\ohdot\v8i\ms\plotting\PDF.pltcfg
Model: Sheet
Printed: 6/19/2018 @ 9:17:48 AM
File: N:\03\60\06634_2E\utilities\sheets\05322U0083.dgn
View: FENCE_VIEW1
By: jdouglas
34" x 22"

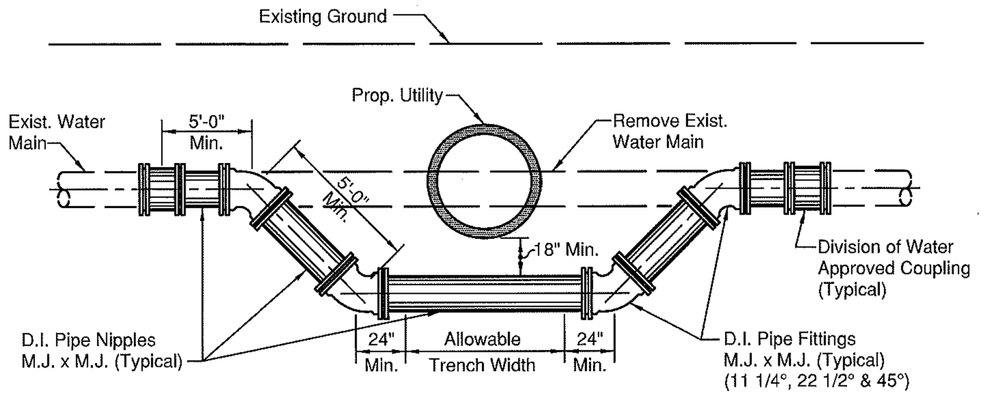

1. The scheduling of any water shut downs shall be as per Item 801 of the current CCMS. Time and duration of all shut downs shall be determined by Division of Water. The Contractor shall notify all water customers effected by the proposed work at least 24 hours in advance of the scheduled shut down.

2. All bends shall be secured by retaining glands, rodding or other methods as approved by the Engineer to restore the water main to service as soon as possible. For water mains 16" and under concrete backing shall then be provided in accordance with Standard Detail L-6310 for over bends and L-6311 for sag bends.

3. Existing Water Mains 20" and greater must have prior approval of DOW to lower under a proposed utility. Approval will only be given under special circumstances and contingent upon the Contractor submitting a designed drawing, stamped by a Professional Engineer, detailing how the lowered water main will be restrained to the existing water main.

4. The relocated mains shall be laid to the new line and grade, tested and disinfected prior to shut down of existing main and connection of the relocated mains to the existing main.

5. All water mains shall be disinfected by swabbing with a 5 per cent Hypochlorite solution in accordance with the applicable sections of A.W.W.A. C-651.

6. For a depth of cover less than ten (10) feet, provide a flat bottom trench. For a depth of cover greater than ten (10) feet, provide 6-inches of CCS No. 57 for bedding.

L-7401.Dwg Revision Date: 1/19/18

CITY OF COLUMBUS DEPARTMENT OF PUBLIC UTILITIES DIVISION OF WATER	STANDARD DETAIL TYPICAL WATER MAIN LOWERING	L-7401
APPROVED: R C Westerfield 1-26-18 ADMINISTRATOR DATE		

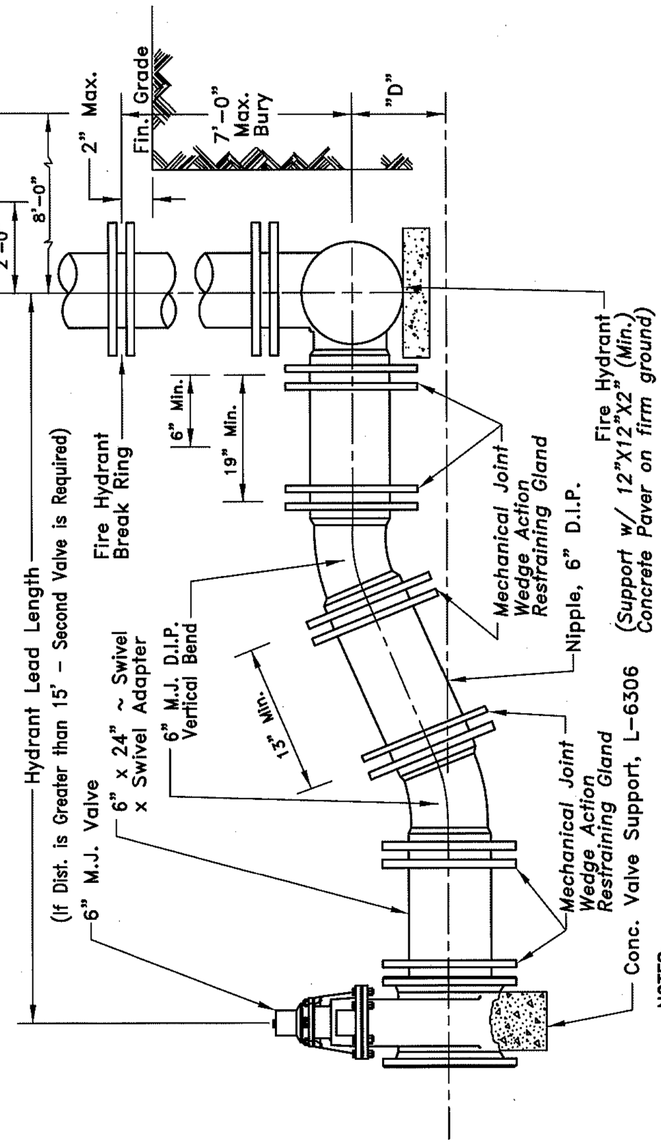

NOTES:

1. Vertical Bends Shall Be 11 1/4°, 22 1/2° or 45°
2. Where "D" is 18" or Less, a Mechanical Joint Ductile Iron Offset may be used in lieu of the two Vertical Bends and the Nipple, as Approved by the Engineer.
3. Fire Hydrants shall be set a minimum of 6' from all Driveway Radius Returns.
4. All Bends are to be Included in the Cost of Item 801.
5. No Hydrant Extensions Will be Permitted without Prior Approval from DOW.

L-7601.Dwg Revision Date: 1/19/18

CITY OF COLUMBUS DEPARTMENT OF PUBLIC UTILITIES DIVISION OF WATER	STANDARD DETAIL TYPICAL HYDRANT SETTING (TO ELIMINATE EXCESSIVE BURY)	L-7601
APPROVED: R C Westerfield 1-26-18 ADMINISTRATOR DATE		

CALCULATED | CHECKED

MISC. DETAILS

FRA-70-14.54

1249
2317

ms consultants, inc.

PLOT.CEL
ms consultants, inc.
msconsultants.com
www.msconsultants.com
Ohio DOT Workspace
70\71 East Interchange 2E
PCF: 60-06634_2E_Columbus
PCF: ohdot1V8i
Batchplot Spec: \\msconsultants.com\files\production\03\60\06634_2E\standards\plotdrv\batchplt.spc
Pen Table: N:\03\60\06634_2E\standards\tables\V8i_ms_std_06634_2D_Plan View.tbl
Plot Driver: \\msconsultants.com\files\Standards\usetn\ohdot\v8i\ms\plotting\PDF.pltcfg
Model: Sheet
Printed: 6/19/2018 @ 9:18:02 AM
File: N:\03\60\06634_2E\utilities\sheets\105220D84.dgn
View: FENCE_VIEW1
By: jdougas
34" x 22"

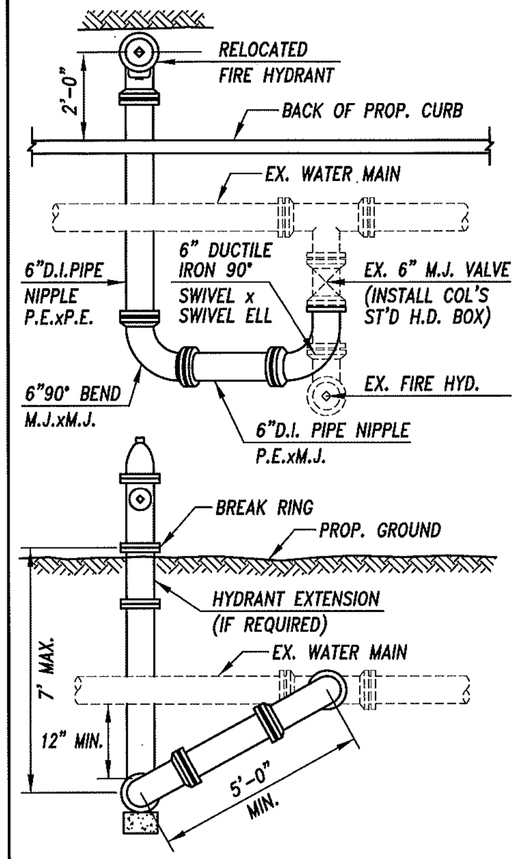

TYPE "A" RELOCATION

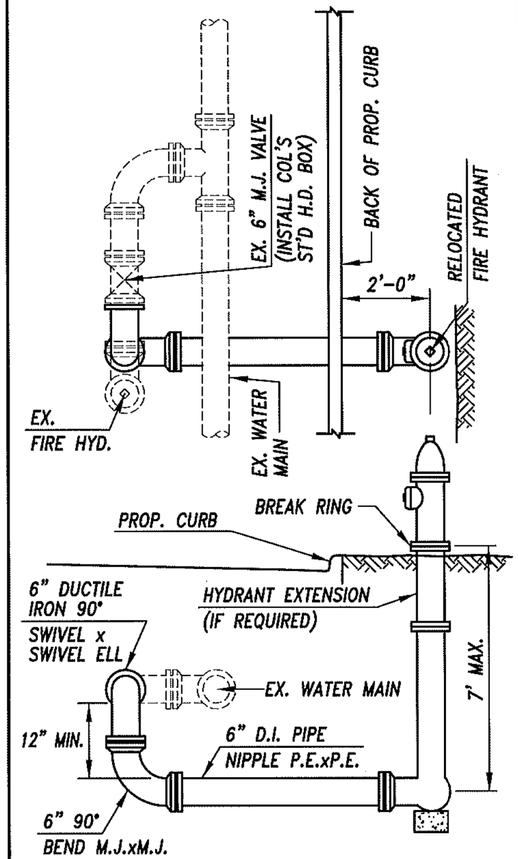

TYPE "B" RELOCATION

1. ALL FIRE HYDRANTS SHALL BE ADJUSTED TO FINAL GRADE.
2. FIRE HYDRANT RELOCATIONS SHALL CONFORM TO APPLICABLE SECTIONS OF C.M.S.C. ITEM 809. WORK SHALL CONSIST OF REMOVING HYDRANT, INSTALLING NEW 6" PIPE & FITTINGS AS REQUIRED TO SET HYDRANT 2' BACK OF CURB OR 8' OFF THE EDGE OF PAVEMENT, RESETTING HYDRANT AND CONCRETE BLOCKING AS REQUIRED. HYDRANT & FITTINGS SHALL BE RESTRAINED, ACCORDING TO STANDARD HYDRANT DETAILS.
3. THE DIVISION OF WATER SHALL BE NOTIFIED AT LEAST 48 HOURS PRIOR TO CONSTRUCTION INVOLVING WATER FACILITIES.
4. ALL EX. VALVES SHALL BE OPERATED BY DIVISION OF WATER PERSONNEL ONLY, AS STATED IN CHAPTER 1113 OF THE COLUMBUS CITY CODES & ITEM 801.16.
5. BACKFILLING OF ALL WATER LINE TRENCHES AND EXCAVATIONS SHALL BE IN ACCORDANCE WITH ITEM 801 OF THE C.M.S.C.. NO GRITS WILL BE PERMITTED IN WATER LINE TRENCH BACKFILL.
6. SHOULD THE RELOCATED HYD. BE MORE THAN 15' FROM THE EXIST. HYD. VALVE THEN AN ADDITIONAL 6" M.J. VALVE SHALL BE INSTALLED, AND RESTRAINED, WITHIN 2' OF THE RELOCATED HYDRANT. IF IN CURB AREA USE CONFIGURATION PER L-6637C.

L-8502.Dwg Revision Date: 1/19/18

CITY OF COLUMBUS DEPARTMENT OF PUBLIC UTILITIES DIVISION OF WATER	STANDARD DETAIL TYPICAL HYDRANT RELOCATION	L-8502
APPROVED: RC Westerfield 1-26-18 ADMINISTRATOR DATE		

NOTES:

The Curb Box shall be placed 1'-0" from the streetedge of the proposed or existing sidewalk/bikepath, or 2 feet inside the right-of-way or easement line when no sidewalk/bikepath is present or proposed.

When a curb box is installed within a traveled area, the contractor shall install a C.I. Ferrule Box per "L-6320".

The Curb Stop Shall Be Installed with Valve Opening Facing the Structure to be served. The Curb Stop Shall Turn "1/4 Turn" Clockwise From On to Off Position. (Typical)

* **NOTE:**
Pipe Shall Be Copper Tubing Size (C.T.S.)

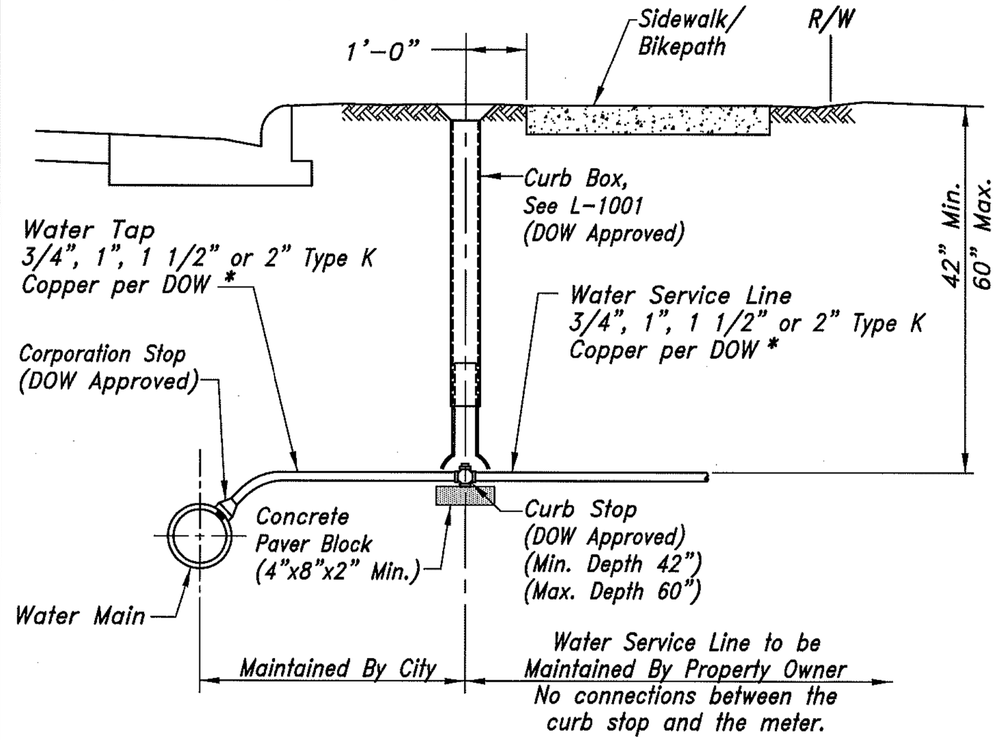

L-9901.Dwg Revision Date: 1/19/18

CITY OF COLUMBUS DEPARTMENT OF PUBLIC UTILITIES DIVISION OF WATER	STANDARD DETAIL CURB BOX INSTALLATION 3/4" THRU 2"	L-9901
APPROVED: RC Westerfield 1-26-18 ADMINISTRATOR DATE		

CALCULATED | CHECKED

MISC. DETAILS

FRA-70-14.54

1250
2317

ms consultants, inc.

PLOT.CEL
ms consultants, inc.
msconsultants.com
www.msconsultants.com
Ohio DOT Workspace
70\71 East Interchange 2E
ODF: ohdot\V8i
PCF: 60-06634_2E_Columbus
Batchplot Spec: \\msconsultants.com\Files\production\03\60\06634_2E\standards\plotdrv\batchplt.spc
Pen Table: N:\03\60\06634_2E\standards\tables\V8i_ms_std_06634_2D_Plan View.tbl
Plot Driver: \\msconsultants.com\Files\Standards\usetn\ohdot\v8i\ms\plotting\PDF.pltcfg
Model: Sheet
Printed: 6/19/2018 @ 9:18:16 AM
File: N:\03\60\06634_2E\utilities\sheets\105322U0085.dgn
View: FENCE_VIEW1
By: jdouglas
34" x 22"

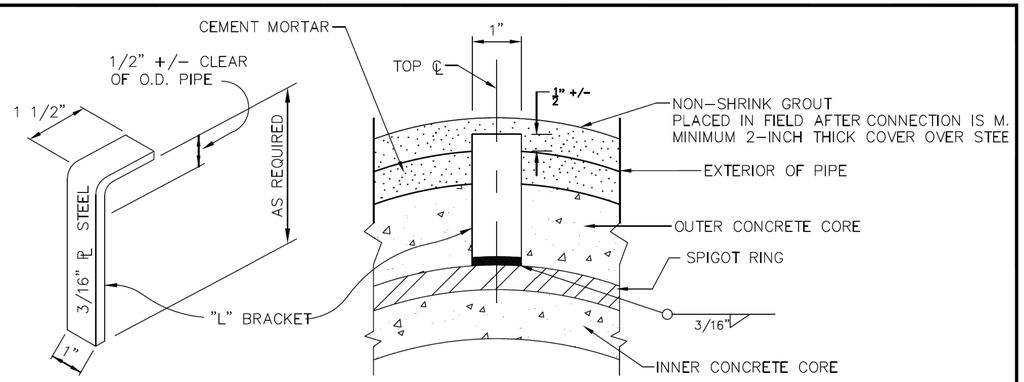

SPIG VIEW

"L" BRACKET DETAIL

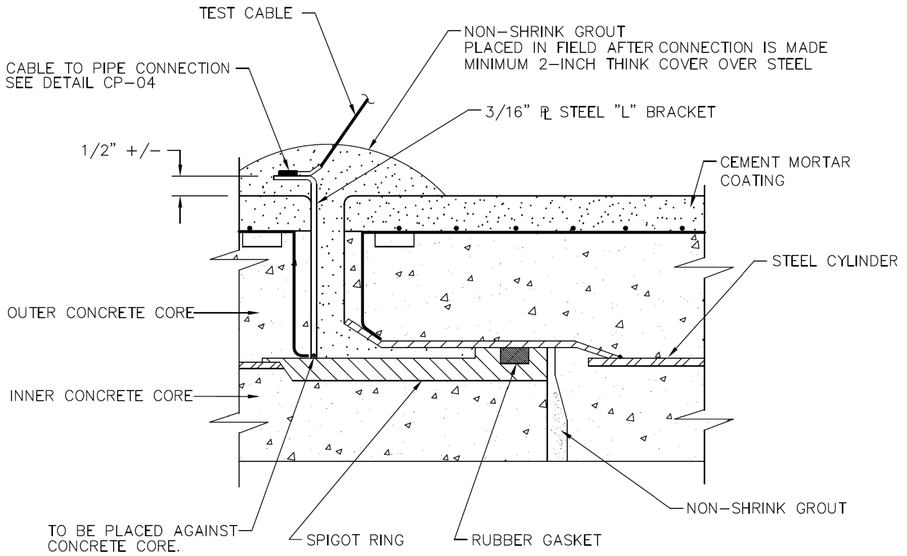

TEST LEAD CONNECTION DETAIL

(CONCRETE PIPE)

CP-01 REVISION DATE: 11-08-12

REV#	DATE	DESCRIPTION	BY
0	11-08-12	APPROVED ISSUE	WBG3

CITY OF COLUMBUS, OH DIVISION OF WATER AND POWER

TEST LEAD CONNECTION DETAIL - CONCRETE PIPE

CP-01

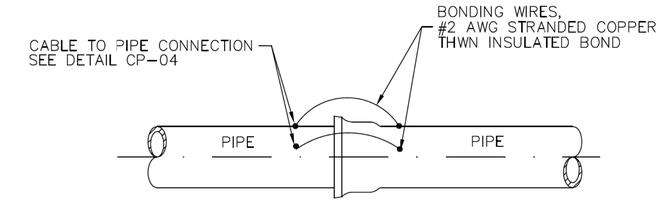

NOTE: 1. CABLE TO PIPE CONNECTIONS SHALL BE PLACED A MINIMUM OF 6" APART.
2. USE 3 WIRES FOR 30" AND LARGER DIAMETER PIPE

BELL AND SPIGOT BONDING ARRANGEMENT

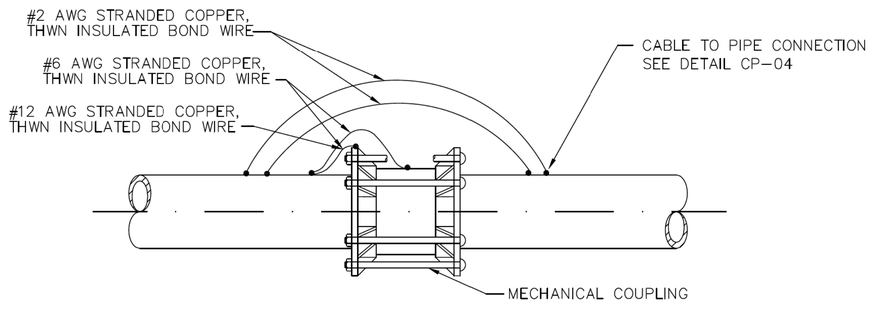

MECHANICAL COUPLING BOND DETAIL

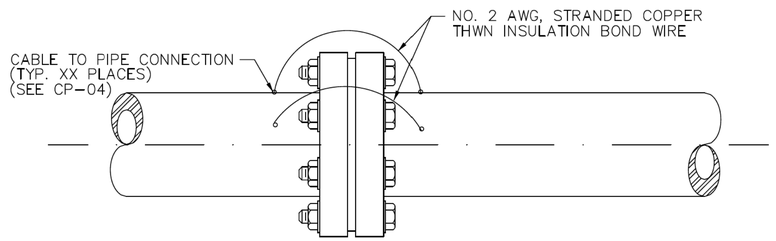

ELECTRICAL BONDING ACROSS FLANGE

NOTE: 1. BOND WIRES SHALL BE PLACED A MINIMUM OF 6" APART.
2. USE 3 WIRES FOR 30" AND LARGER DIAMETER PIPE

CP-02 REVISION DATE: 11-08-12

REV#	DATE	DESCRIPTION	BY
0	11-08-12	APPROVED ISSUE	WBG3

CITY OF COLUMBUS, OH DIVISION OF WATER AND POWER

ELECTRICAL BONDING AT MECHANICAL PIPE JOINT CONNECTIONS

CP-02

CALCULATED | CHECKED

MISC. DETAILS

FRA-70-14.54

1251
2317

ms consultants, inc.

PLOT.CEL
ms consultants, inc.
msconsultants.com
www.msconsultants.com
Ohio DOT Workspace
70\71 East Interchange 2E
ODF: ohdot\V8i
PCF: 60-06634_2E_Columbus
Batchplot Spec: \\msconsultants.com\Files\production\03\60\06634_2E\standards\plotdrv\batchplt.spc
Pen Table: N:\03\60\06634_2E\standards\tables\V8i_ms_std_06634_2D_Plan View.tbl
Plot Driver: \\msconsultants.com\Files\Standards\ustn\ohdot\v8i\ms\plotting\PDF.pltdrv
34" x 22"
View: FENCE_VIEW1
By: jdouglas
Model: Sheet
Printed: 6/19/2018 @ 9:18:30 AM
File: N:\03\60\06634_2E\utilities\sheets\1053220086.dgn

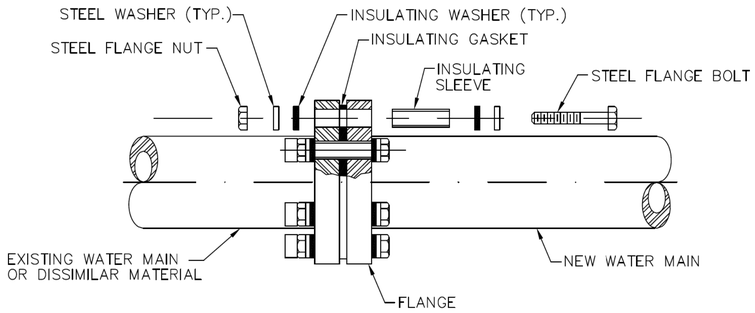

ISOLATION FLANGE

NOTES:

1. FOR BURIED LOCATIONS COAT FLANGE AND EXPOSED STEEL USING WAX TAPE COATING SYSTEM
2. FOR ABOVE GROUND LOCATIONS COAT EXPOSED STEEL WITH UV RESISTANT EPOXY COATING

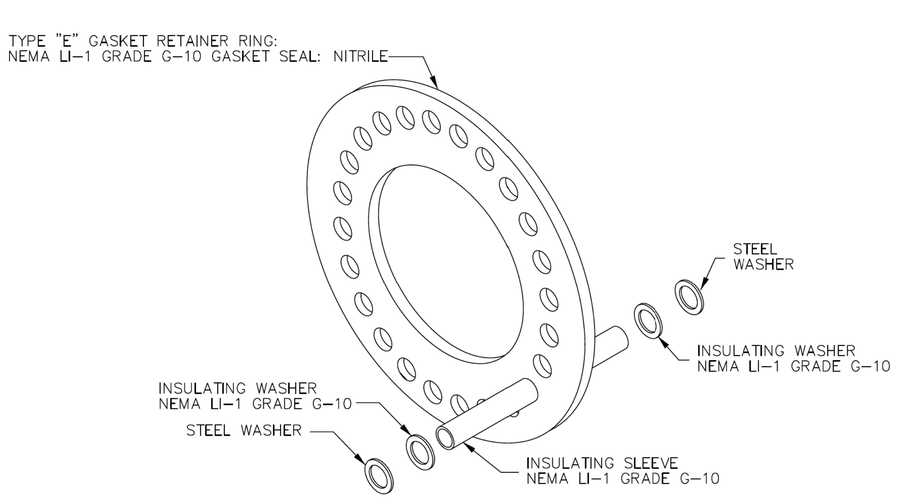

ISOLATION FLANGE ASSEMBLY

CP-03 REVISION DATE: 11-08-12

REV#	DATE	DESCRIPTION	BY
0	11-08-12	APPROVED ISSUE	WBG3

CITY OF COLUMBUS, OH DIVISION OF WATER AND POWER

ISOLATION FLANGE DETAIL | CP-03

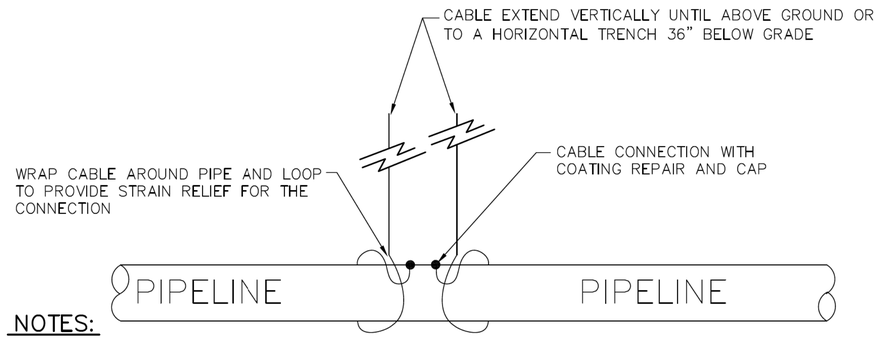

NOTES:

GENERAL:

1. CONNECTION MAY BE MADE BY EITHER EXOTHERMIC WELDING OR ELECTRICAL PIN BRAZING METHOD
2. REVIEW AND FOLLOW ALL MANUFACTURER INSTRUCTIONS, INCLUDING SAFETY PRECAUTIONS, CONSUMABLE MATERIAL SELECTION, STRUCTURE TYPE, PIPE DIAMETER, STRUCTURE SHAPE, CONNECTION ORIENTATION, SURFACE PREPARATION, AND CABLE SIZE.
3. ALL CONSUMABLE MUST BE COMPATIBLE WITH AND WHERE SUITABLE, MANUFACTURED BY THE SAME MANUFACTURER AND THE CONNECTION SYSTEM.
4. ALL WELDING AND BRAZING EQUIPMENT AND CONSUMABLE MUST BE KEPT DRY.
5. THE CONNECTION POINT ON THE STRUCTURE SHALL BE PREPARED TO A BRIGHT, SHINY, METALLIC SURFACE FREE OF ALL SERIOUS PITS AND FLAWS BY USE OF A MECHANICAL GRINDER OR FILE.
6. REMOVE SLAG FROM CONNECTION PRIOR TO VISUAL INSPECTION AND IMPACT TESTING.
7. VISUALLY INSPECT THE CONNECTION FOR SIZE, MATERIAL LEAKAGE, EXPOSED CONDUCTOR, POROSITY, COLOR, AND SURFACE FINISH.
8. CHECK ADHERENCE OF THE BOND TO THE SUBSTRATE FOR MECHANICAL INTEGRITY BY PULLING AND APPLYING STEADY TENSION TO THE CABLE WHILE STRIKING THE SIDE OF THE WELD ONCE WITH A LB.. HAMMER WITH A SHEARING BLOW. DO NOT STRIKE THE COPPER CONDUCTOR.
9. ANY CONNECTIONS THAT BREAK LOOSE OR SHOW SIGNS OF POOR QUALITY SHALL BE REMOVED AND REPLACED WITH A SOUND CABLE TO STRUCTURE CONNECTION.
10. IF THE PORTION OF REJECTED CONNECTIONS IS MORE THAN 5 PERCENT OR 3 DURING ONE WORK DAY THE CONTRACTOR SHALL STOP MAKING CONNECTIONS AND THOROUGHLY REVIEW THE MANUFACTURE'S INSTALLATION INSTRUCTIONS AND INSPECTIONS GUIDE TO REDUCE THE NUMBER OF REJECTED WELDS.
11. APPLY DIELECTRIC COATING REPAIR TO COVER ALL EXPOSED METAL.
12. FOR CONCRETE COATED STRUCTURES OR PIPE, INSTALL A OUTER LAYER OF CEMENT MORTAR OVER THE DIELECTRIC COATING. CEMENT MORTAR SHALL BE THE SAME AS SPECIFIED FOR THE CONCRETE STRUCTURE OR PIPE.
13. PIPE LEAD CABLES SHALL BE LOOPED THE WRAPPED AROUND THE PIPE, PASSED THROUGH THE LOOP TO FORM A CHOKE, AND THEN ROUTED TO THE TEST BOX.

CONNECTION BY EXOTHERMIC WELDING:

1. EXOTHERMIC WELD PRODUCTS AND CONSUMABLE PRODUCTS: THERMOWELD ® BY CONTINENTAL INDUSTRIES INC. AND CADWELD ® BY ERICO INTERNATIONAL CORP.
2. WELD MOLD SHALL BE CLEANED OF SLAG AFTER EACH WELD AND MOLDS MUST BE REPLACED AFTER THEY ARE WORN OR AFTER 100 WELDS, WHICHEVER COMES FIRST.
3. WHERE WELD MATERIAL ESCAPES THE MOLD, THESE CONNECTIONS SHALL BE REMOVED AND REPLACED WITH A SOUND CABLE TO STRUCTURE CONNECTION.
4. USE WELD CAPS AND PRIMER TO COVER CONNECTIONS.

CONNECTION BY ELECTRICAL PIN BRAZING:

1. MANUFACTURERS OF SYSTEMS AND CONSUMABLE: BAC, AVAILABLE FROM FARWEST CORROSION CONTROL COMPANY AND SAFETRACK (S30 XC OR ECONECT) AVAILABLE FROM CORRPRO.
2. RECOAT THE STRUCTURE WHERE THE SYSTEM GROUND CONNECTION WAS CONNECTED.

CP-04 REVISION DATE: 11-08-12

REV#	DATE	DESCRIPTION	BY
0	11-08-12	APPROVED ISSUE	WBG3

CITY OF COLUMBUS, OH DIVISION OF WATER AND POWER

CABLE TO STRUCTURE AND PIPE CONNECTION | CP-04

CALCULATED | CHECKED

MISC. DETAILS

FRA-70-14.54

1252
2317

ms consultants, inc.

PLOT.CEL
ms consultants, inc.
msconsultants.com
www.msconsultants.com
Ohio DOT Workspace
70\71 East Interchange 2E
PCF: 60-06634_2E_Columbus
DGN: ohdot\V8i
Batchplot Spec: \\msconsultants.com\Files\Production\03\60\06634_2E\standards\plotdrv\batchplt.spc
Pen Table: N:\03\60\06634_2E\standards\tables\V8i_ms_std_06634_2D_Plan View.tbl
Plot Driver: \\msconsultants.com\Files\Standards\usth\ohdot\v8i\ms\plotting\PDF.pltcfg
Model: Sheet
Printed: 6/19/2018 @ 9:18:45 AM
File: N:\03\60\06634_2E\utilities\sheets\053220087.dgn
View: FENCE_VIEW1
By: jdouglas
34" x 22"

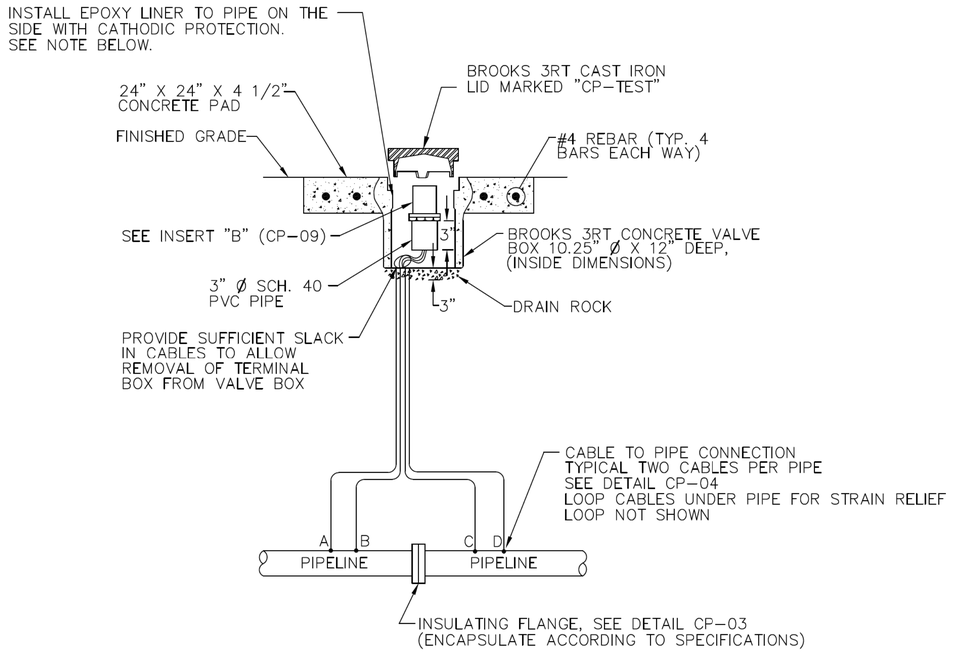

FLUSH MOUNTED FLANGE ISOLATION TEST STATION

WIRE CODING:
* WIRES A AND B ARE BLACK, WIRES C AND D ARE WHITE
* WIRES A AND D ARE #8 AWG HMWPE STRANDED SINGLE CONDUCTOR
* WIRES B AND C ARE #6 AWG HMWPE STRANDED SINGLE CONDUCTOR
* BLACK WIRES ATTACH TO UNPROTECTED OR EXISTING PIPE
* WHITE WIRES ATTACH TO PROTECTED OR NEW PIPE

NOTES INTERIOR LINING:
1. AT INSULATED PIPE FLANGE, AN ADDITIONAL TWO-PART SMOOTH EPOXY LINING SHALL BE APPLIED IN ACCORDANCE WITH PROJECT SPECIFICATIONS.
2. THE INTERIOR OF THE PIPE AND FLANGES SHALL BE COATED WITH TWO-PART SMOOTH EPOXY ON THE SIDE OF THE FLANGE WITH CATHODIC PROTECTION FOR A MINIMUM LENGTH OF 24-INCHES OR THREE PIPE NOMINAL DIAMETERS.
3. REFER TO PROJECT SPECIFICATIONS FOR SURFACE PREPERATION AND APPLICATION.

CP-05 REVISION DATE: 11-08-12

REV#	DATE	DESCRIPTION	BY
0	11-08-12	APPROVED ISSUE	WBG3

CITY OF COLUMBUS, OH DIVISION OF WATER AND POWER

FLUSH MOUNTED FLANGE ISOLATION TEST STATION

CP-05

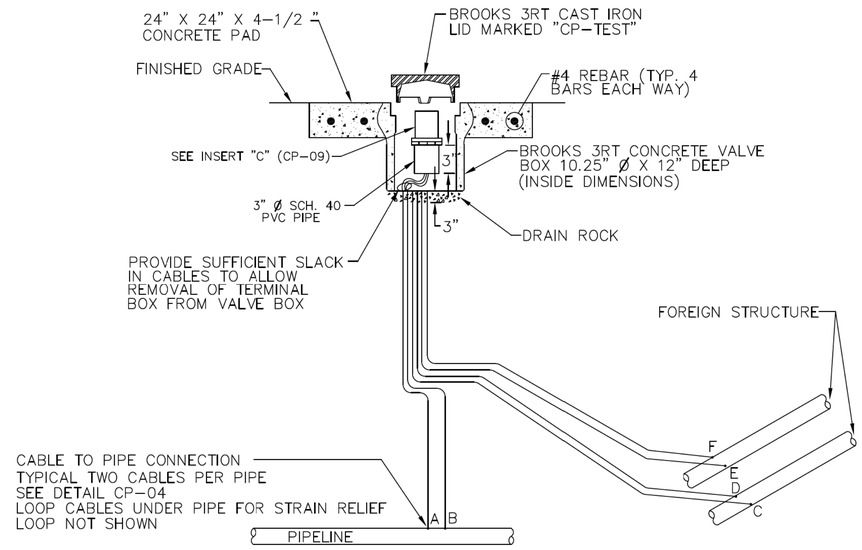

FLUSH MOUNTED FOREIGN LINE TEST STATION

WIRING CODE:
* WIRES A AND B ARE WHITE
* WIRES C, D, E AND F ARE RED
* WIRES A, C, F ARE #8 AWG HMWPE STRANDED SINGLE CONDUCTOR
* WIRES B, D, E ARE #6 AWG HMWPE STRANDED SINGLE CONDUCTOR
* RED WIRES ATTACH TO FOREIGN OWNED PIPE
* WHITE WIRES ATTACH TO NEW PIPE

NOTES:
1. TEST STATION SHALL BE MOUNTED DIRECTLY ABOVE THE NEW WATER LINE.
2. FOR MORE THAN TWO (2) FOREIGN LINES, INSTALL A COTTBOX TYPE TEST STATION. (UP TO 20 TERMINALS)

CP-06 REVISION DATE: 11-08-12

REV#	DATE	DESCRIPTION	BY
0	11-08-12	APPROVED ISSUE	WBG3

CITY OF COLUMBUS, OH DIVISION OF WATER AND POWER

FLUSH MOUNTED FOREIGN LINE TEST STATION

CP-06

CALCULATED | CHECKED

MISC. DETAILS

FRA-70-14.54

1253
2317

ms consultants, inc.

PLOT.CEL
ms consultants, inc.
msconsultants.com
www.msconsultants.com
Ohio DOT Workspace
70\71 East Interchange 2E
PCF: 60-06634_2E_Columbus
PDF: ohdot\V8i
Batchplot Spec: \\msconsultants.com\Files\production\03\60\06634_2E\standards\plotdir\batchplt.spc
Pen Table: N:\03\60\06634_2E\standards\tables\V8i_ms_std_06634_2D_Plan View.tbl
Plot Driver: \\msconsultants.com\Files\Standards\astm\ohdot\v8i\ms\plotting\PDF.pltcfg
Model: Sheet
Printed: 6/19/2018 @ 9:18:59 AM
File: N:\03\60\06634_2E\utilities\sheets\105220088.dgn
View: FENCE_VIEW1
By: jdouglas
34" x 22"
ms consultants, inc.

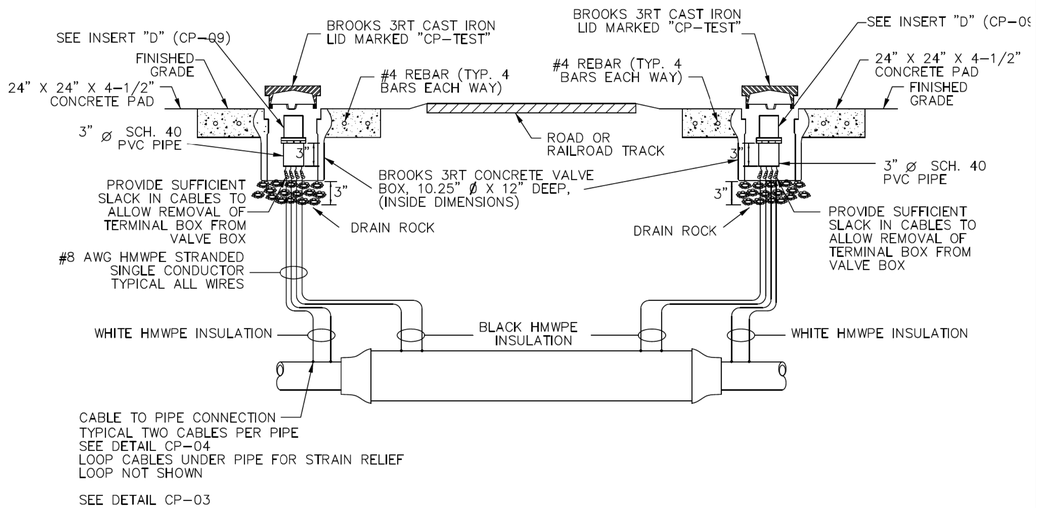

FLUSH MOUNTED CASED CROSSING TEST STATION

CP-07 REVISION DATE: 11-08-12

REV#	DATE	DESCRIPTION	BY
0	11-08-12	APPROVED ISSUE	WBG3

CITY OF COLUMBUS, OH DIVISION OF WATER AND POWER

FLUSH MOUNTED CASED CROSSING TEST STATION

CP-07

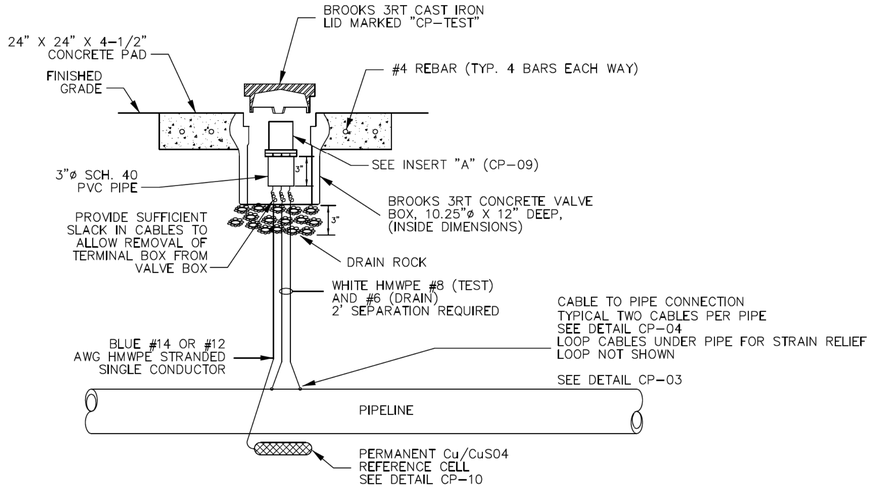

FLUSH MOUNTED POTENTIAL TEST STATION

CP-08 REVISION DATE: 11-08-12

REV#	DATE	DESCRIPTION	BY
0	11-08-12	APPROVED ISSUE	WBG3

CITY OF COLUMBUS, OH DIVISION OF WATER AND POWER

FLUSH MOUNTED POTENTIAL TEST STATION

CP-08

CALCULATED | CHECKED

MISC. DETAILS

FRA-70-14.54

1254
2317

PLOT.CEL
ms consultants, inc.
msconsultants.com
www.msconsultants.com
Ohio DOT Workspace
70\71 East Interchange 2E
PCF: 60-06634_2E_Columbus
PDF: ohdot\V8i
Batchplot Spec: \\msconsultants.com\Files\production\03\60\06634_2E\standards\plotdrv\batchplt.spc
Pen Table: N:\03\60\06634_2E\standards\tables\V8i_ms_std_06634_2D_Plan View.tbl
Plot Driver: \\msconsultants.com\Files\Standards\ustn\ohdot\v8i\ms\plotting\PDF.pltcfg
Model: Sheet
Printed: 6/19/2018 @ 9:19:15 AM
File: N:\03\60\06634_2E\utilities\sheets\053220009.dgn
View: FENCE_VIEW1
By: jdouglas
34" x 22"
1"
0.5"
0

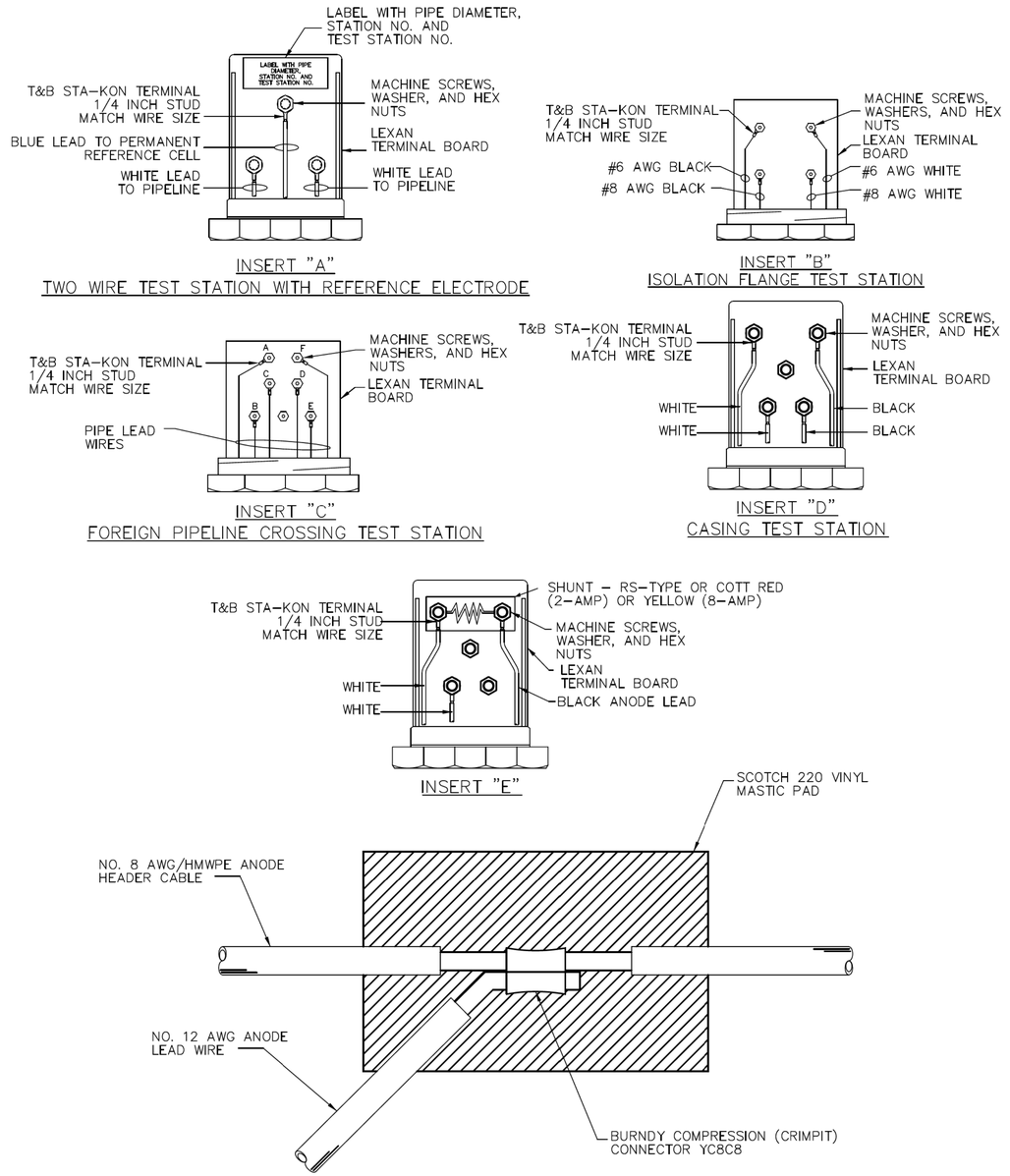

CP-09 REVISION DATE: 11-08-12

REV#	DATE	DESCRIPTION	BY
0	11-08-12	APPROVED ISSUE	WBG3

CITY OF COLUMBUS, OH DIVISION OF WATER AND POWER

TERMINAL BOX AND SPLICE DETAILS

CP-09

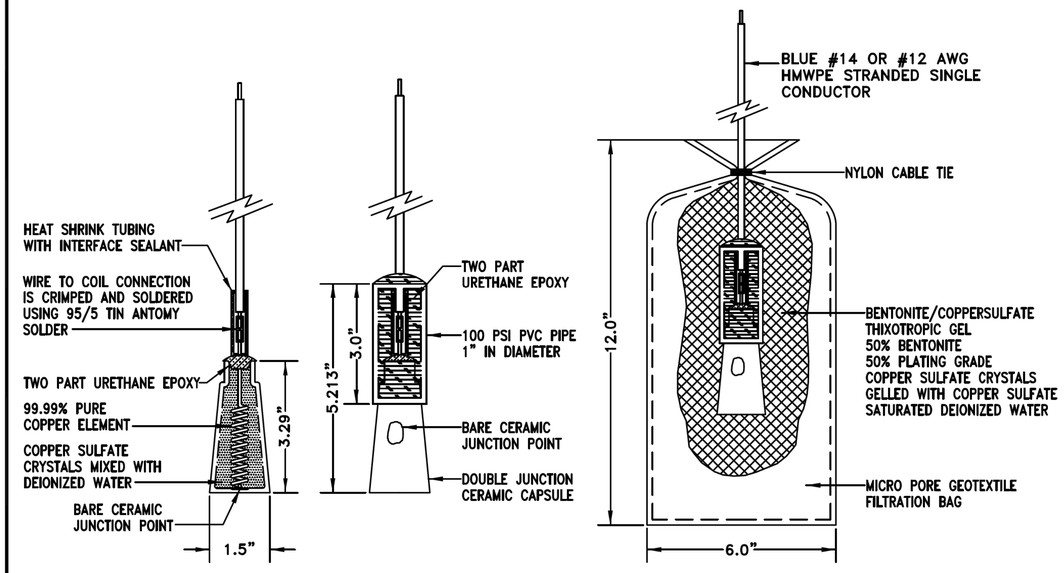

PERMANENT REFERENCE CELL

NOTE: ACCEPTABLE MANUFACTURE'S PRODUCTS WHICH MAY BE INCORPORATED INTO THE WORK INCLUDE THE FOLLOWING OR AN APPROVED EQUAL:

1. BORN MANUFACTURING, INC. MODEL SRE-007-CUY
2. ELECTROCHEMICAL DEVICES, INC. MODEL UL
3. CORRPRO PERMA-CELL PLUS Cu/CuSO4 DIRECT BURIAL REFERENCE ELECTRODE

CP-10 REVISION DATE: 11-08-12

REV#	DATE	DESCRIPTION	BY
0	11-08-12	APPROVED ISSUE	WBG3

CITY OF COLUMBUS, OH DIVISION OF WATER AND POWER

PERMANENT REFERENCE CELL DETAILS

CP-10

CALCULATED | CHECKED

MISC. DETAILS

FRA-70-14.54

1255
2317

ms consultants, inc.

PLOT.CEL
ms consultants, inc.
msconsultants.com
www.msconsultants.com
Ohio DOT Workspace
70\71 East Interchange 2E
ODF: ohdot\V8i
PCF: 60-06634_2E_Columbus
Batchplot Spec: \\msconsultants.com\files\production\03\60\06634_2E\standards\plotdrv\batchplt.spc
Pen Table: N:\03\60\06634_2E\standards\tables\V8i_ms_std_06634_2D_Plan View.tbl
Plot Driver: \\msconsultants.com\files\Standards\ustn\ohdot\v8i\ms\plotting\PDF.pltcfg
Model: Sheet
Printed: 6/19/2018 @ 9:19:29 AM
File: N:\03\60\06634_2E\utilities\sheets\V05322100900.dgn
View: FENCE_VIEW1
By: jdoughas
34" x 22"
CALCULATED
CHECKED

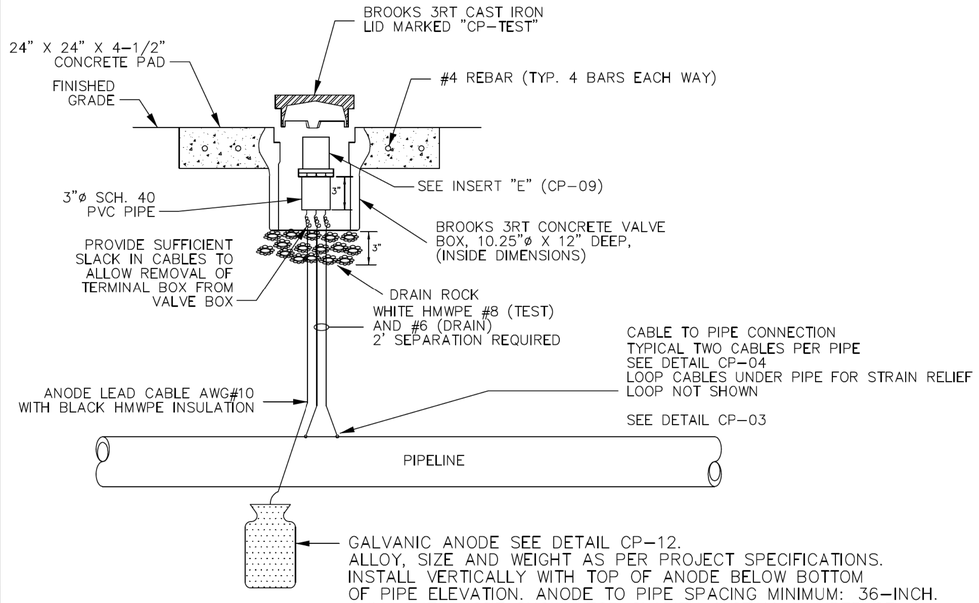

GALVANIC ANODE SEE DETAIL CP-12.
ALLOY, SIZE AND WEIGHT AS PER PROJECT SPECIFICATIONS. INSTALL VERTICALLY WITH TOP OF ANODE BELOW BOTTOM OF PIPE ELEVATION. ANODE TO PIPE SPACING MINIMUM: 36-INCH. ONLY ONE ANODE SHOWN FOR CLARITY. INSTALL NUMBER OF ANODES AS CALLED FOR IN PROJECT DESIGN REPORT. ANODE TO ANODE SPACING MINIMUM: 10 FEET. FOR GROUNDBEDS WITH FOUR OR MORE ANODES USE A LOOPED HEADER CABLE WITH AWG#8 BLACK HMWPE CABLE WITH TWO LEADS INTO TEST BOX. SPLICE ANODE LEAD CABLE TO HEADER CABLE USING INSULATED SPLICE CONNECTION AS PER SPLICE DETAIL CP-09.

GALVANIC ANODE CATHODIC PROTECTION TEST STATION

11-08-12

CP-10 REVISION DATE: 11-08-12

REV#	DATE	DESCRIPTION	BY
0	11-08-12	APPROVED ISSUE	WBG3

CITY OF COLUMBUS, OH DIVISION OF WATER AND POWER

GALVANIC ANODE CATHODIC PROTECTION TEST STATION

CP-11

HIGH POTENTIAL
ANODE INGOT
CHEMICAL COMPOSITION

ELEMENT	AMOUNT BY WT
AL	0.010%
Mn	0.50-1.30%
Cu	0.02% Max
Ni	0.001% Max
Fe	0.03% Max
OTHER	0.30% Max
Mg	REMAINDER

ANODE SIZE	AS SPECIFIED
INGOT WEIGHT:	AS SPECIFIED
PACKAGED WEIGHT:	AS SPECIFIED
ANODE DIMENSIONS:	AS SPECIFIED

BACKFILL COMPOSITION

GYPSUM	75%
BENTONITE	20%
SODIUM SULFATE	5%

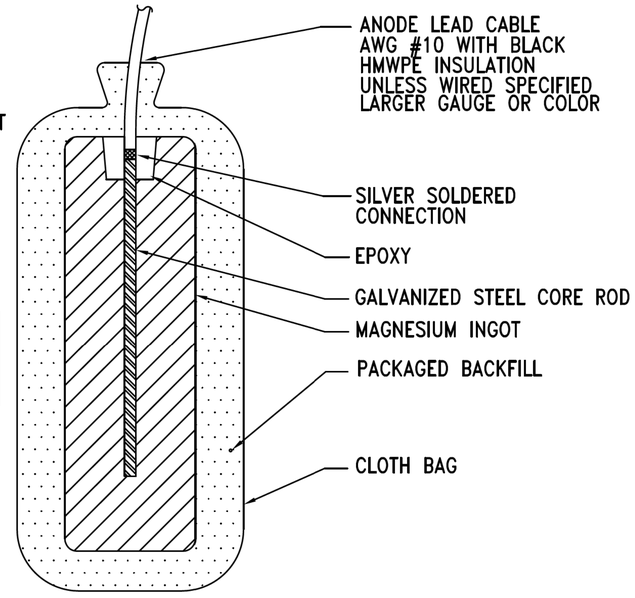

NOTES:
1. MAGNESIUM INGOT SHALL BE CENTERED IN BACKFILL MATERIAL. IF REQUIRED ROLL PACKAGED ANODE AFTER SHIPPING TO REPOSITION INGOT IN CENTER OF BACKFILL
2. REMOVE PLASTIC SHIPPING MATERIAL PRIOR TO INSTALLATION.
3. MEASURE AND RECORD ANODE OPEN CIRCUIT POTENTIAL PRIOR TO INSTALLATION. INCLUDE TEST DATA IN TESTING SUBMITTALS.
4. DO NOT SUSPEND ANODE WEIGHT FROM COPPER WIRE. USE A ROPE SLING TO HOIST AND LOWER ANODE DURING INSTALLATION.

GALVANIC ANODE DETAIL

CP-10 REVISION DATE: 11-08-12

REV#	DATE	DESCRIPTION	BY
0	11-08-12	APPROVED ISSUE	WBG3

CITY OF COLUMBUS, OH DIVISION OF WATER AND POWER

GALVANIC ANODE DETAIL

CP-12

MISC. DETAILS

FRA-70-14.54

1256
2317

PLOT.CEL

ms consultants, inc.
msconsultants.com

www.msconsultants.com
Ohio DOT Workspace
70\71 East Interchange 2E

0 0.5" 1"

Batchplot Spec: \\msconsultants.com\files\Production\03\60\06634_2E\standards\plotdrv\batchplt.spc
Pen Table: \\msconsultants.com\files\Production\03\60\06634_2E\standards\tables\V8i_ms_1.tbl
Plot Driver: \\msconsultants.com\files\Standards\usetn\ohdot\v8i\ms\plotting\PDF.prc\g

Model: Sheet View: SHEET
Printed: 1/17/2019 @ 3:04:40 PM By: dhall
File: \\msconsultants.com\files\Production\03\60\06634_2E\drainage\sheets\1053220T100.dgn

34" x 22"

PROP. MH-3, (T503)
STA T70WB 672+51.76, 16.68' LT
RIM ELEV 748.78
15" (SW) 744.10
6" (E) 747.78 T.D.
15" (NE) 744.10

EX. MH (13290)
FLAT SLAB TOP ELEV 750.57
STA 972+82.32, 1.33' RT
EX. 18" RCP SE 748.50
EX. 15" RCP S 745.58 (TBR)
EX. 84" RCP E 730.15
EX. 84" RCP W 730.15
15" (SW) 743.42

PROP. I-3D, (T502)
STA T70WB 671+85.00, 20.42' RT
GRATE ELEV 749.39
15" (NE) 745.64

EX GROUND
TRANS 70WB
TRANS I-71SB (W)
PROP. GROUND
77' - 15" TYPE B @ 2.00%
34'-15" TYPE B @ 2.00%

752.08 752.43 752.67 752.84 753.08 752.90

EX GROUND
PROP I-3D, (T500)
STA TC71SB 975+34.15, 22.44' LT
I-3-D, GRATE ELEV 761.11
15" (SE) 756.65

PROP I-3-C1 (110)
STA I-70 775+16.77, 2.97' LT
GRATE ELEV 762.32
15" (NE) 754.37
15" (S) 756.10
15" (W) 754.37

PROP I-3C, (T501)
STA 975+44.77, 22.74' RT
I-3-C, GRATE ELEV 763.05
15" (NW) 755.51
15" (SW) 755.51

TRANS 71SB
TRANS 70WB
PROP. GROUND
46'-15" TYPE B @ 2.48%
61'-15" TYPE B @ 1.87%
SEE SHEET 1259F FOR ROUTING CONTINUATION

772.62 760.98 761.72 761.86 EX. 84" 760.55 760.73

PROP CB-3A (T558)
STA TC70WB 681+78.47, 20.82' RT
GRATE ELEV 778.48
15" (S) 775.23

EX GROUND
PROP. GROUND
7'-15" TYPE F @ 1.71%
18" MIN.
85'-15" TYPE F @ 55.55%
PROP CB-8, (T560)
STA TC70WB 681+78.05, 63.41' RT
GRATE ELEV 759.98
15" (E) 755.58
PROP MH-3 (13768)
STA TC70WB 681+87.06, 67.08' RT
TOP OF CASTING 761.40
15" E 755.40
15" W 755.40
9'-15" TYPE C @ 2.00%
EX. 15" @ 0.68%
MASONRY COLLAR PER DM 1.1
6'-15" TYPE C @ 0.68%

779.72 779.01 766.70 761.10

PROP CB-3A (E32)
STA TC70WB 219+44.96, 10.08' RT.
GRATE ELEV 788.61
15" (NE) 784.11

EX. MH (12282)
STA 219+76.44, 43.62' LT
MH-3, T.C. ELEV 790.46
RTG ELEV. 788.45
EX. 36" RCP S 765.80
EX. 36" RCP NE 769.96
EX. 30" RCP N 766.56
EX. 12" RCP W 785.56
EX. 15" RCP S 782.56
15" (SW) 782.56

TRANS. I-70 WB
EX GROUND
PROP. GRADE
62'-15" TYPE B @ 2.50%

789.94 788.94 789.87 790.16

PROP MH-3 A.P.P. (59)
STA TEP2 62+50.23, 20.93' LT
FLAT SLAB TOP 766.53
15" (SE) 764.27
15" (N) 764.27
15" (E) 764.27
24" (W) 763.52

PROP I-3-C1 (E3)
STA TC70WB 239+49.58, 8.26' RT
GRATE ELEV 770.63
15" (NW) 765.30

PROP. GRADE
TRANS. I-70 WB
EX. GROUND
EX. 15"
138'-15" TYPE B @ 0.74%
SEE SHEET 1258F FOR ROUTING CONTINUATION
6'-15" TYPE C @ 0.75%
MASONRY COLLAR PER DM-1.1

772.58 769.62 770.47 770.81 771.10 771.10 770.92

PROP. CB-8 (E1)
STA. TC70WB 241+56.72, 67.46' LT
GRATE ELEV 769.60
15" (S) 765.86
15" (W) 765.86
12" (S) 766.11

PROP. GRADE
TRANS. I-70 WB
EX GROUND
MASONRY COLLAR
81'-15" TYPE B @ 1.11%
EX. 15"
6'-12" TYPE C @ 0.33%
6'-15" TYPE C @ 0.75%
PROP I-3-B1 (E2)
STA. TC70WB 241+87.97, 6.00' RT
GRATE ELEV 770.76
15" (N) 766.76
MASONRY COLLAR PER DM-1.1

771.26 771.31 771.61 771.25 771.39

CALCULATED | CHECKED

LONGITUDINAL SEWER PROFILES
TRANSITIONAL I-70 W.B.

FRA-70-14.54

1257
2317

ms consultants, inc.

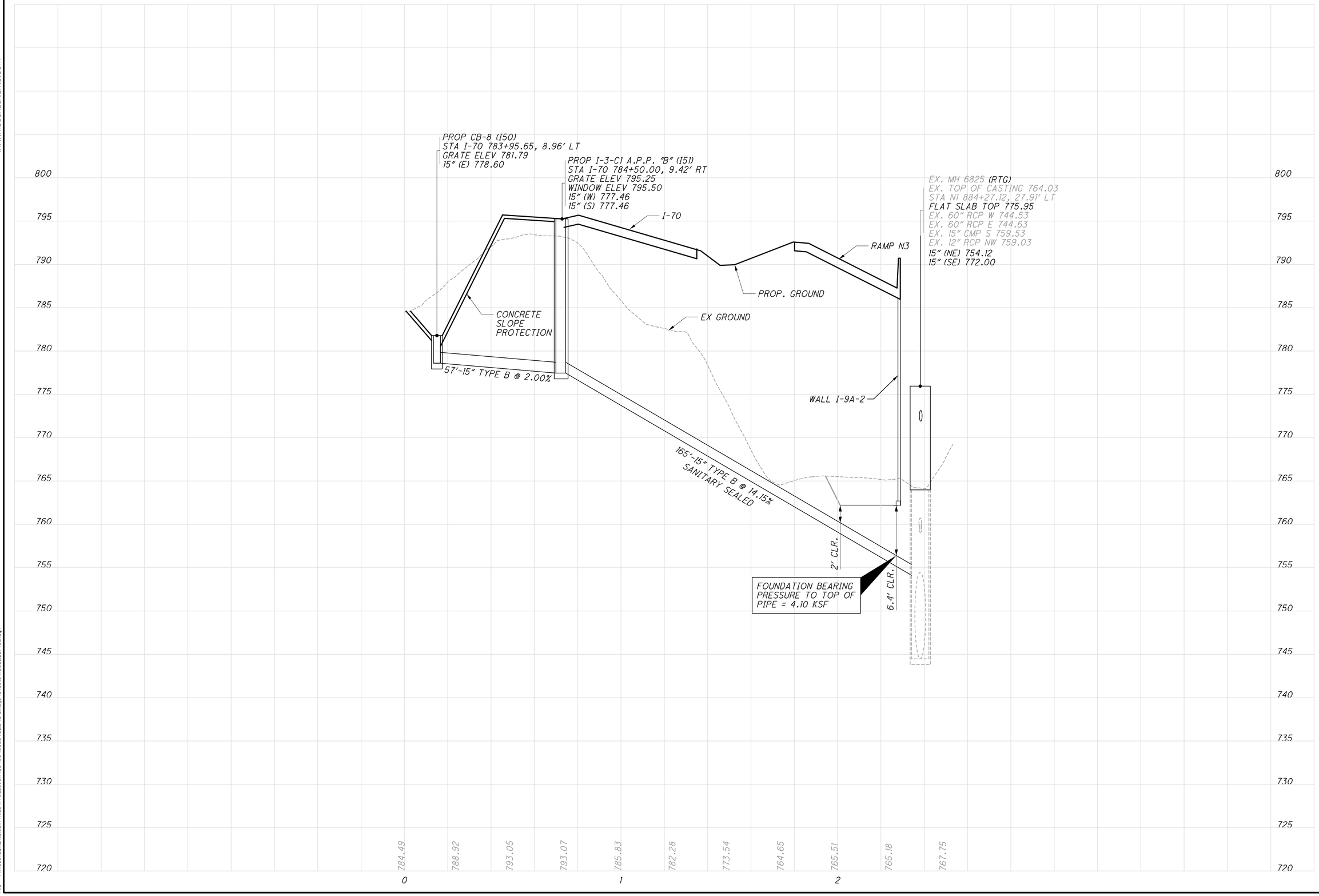

LONGITUDINAL SEWER PROFILES
I-70

FRA-70-14.54

1257A
2317

CALCULATED
CHECKED

ms consultants, inc.

PLOT.CEL

ms consultants, inc.
msconsultants.com

Ohio DOT Workspace
70\71 East Interchange 2E
www.msconsultants.com

Batchplot Spec: \\msconsultants.com\files\production\03\60\06634_2E\standards\plotdrv\batchplt.spc
Pen Table: \\msconsultants.com\files\Production\03\60\06634_2E\standards\tables\V8i_ms_slg_06634_2D_Plan_View.tbl
Plot Driver: \\msconsultants.com\files\Standards\ustn\ohdot\v8i\ms\plotting\PDF.pltcfg

34" x 22"

Model: Sheet
Printed: 1/17/2019 @ 3:18:35 PM
File: \\msconsultants.com\files\Production\03\60\06634_2E\drainage\sheets\105322DF103.dgn
View: SHEET
By: dhall

PLOT.CEL

ms consultants, inc.
msconsultants.com

Ohio DOT Workspace
70\71 East Interchange 2E
www.msconsultants.com

0 0.5" 1"

Batchplot Spec: \\msconsultants.com\files\production\03\60\06634.2E\standards\plotdrv\batchplt.spc
Pen Table: \\msconsultants.com\files\Production\03\60\06634.2E\standards\tables\V8i_ms_mm.tbl
Plot Driver: \\msconsultants.com\files\Standards\usetn\ohdot\v8i\ms\plotting\PDF.pltcfg

Model: Sheet
Printed: 1/17/2019 @ 3:27:39 PM By: dthill View: SHEET
File: \\msconsultants.com\Files\Production\03\60\06634.2E\drainage\sheets\1053220F101.dgn

34" x 22"

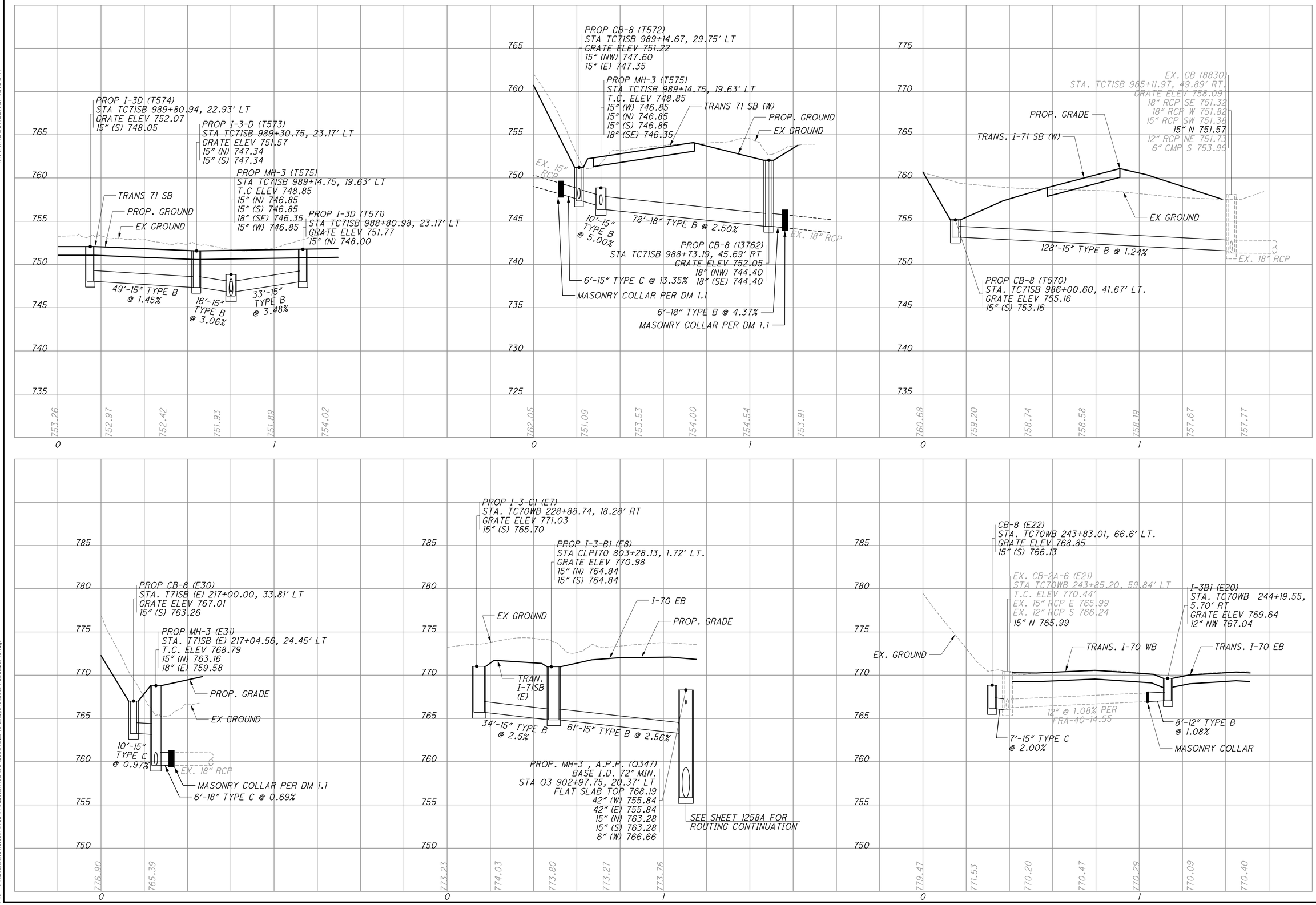

LONGITUDINAL SEWER PROFILES
TRANSITIONAL I-71 S.B. & I-70 W.B.

CALCULATED

CHECKED

FRA-70-14.54

1257B
2317

ms consultants, inc.

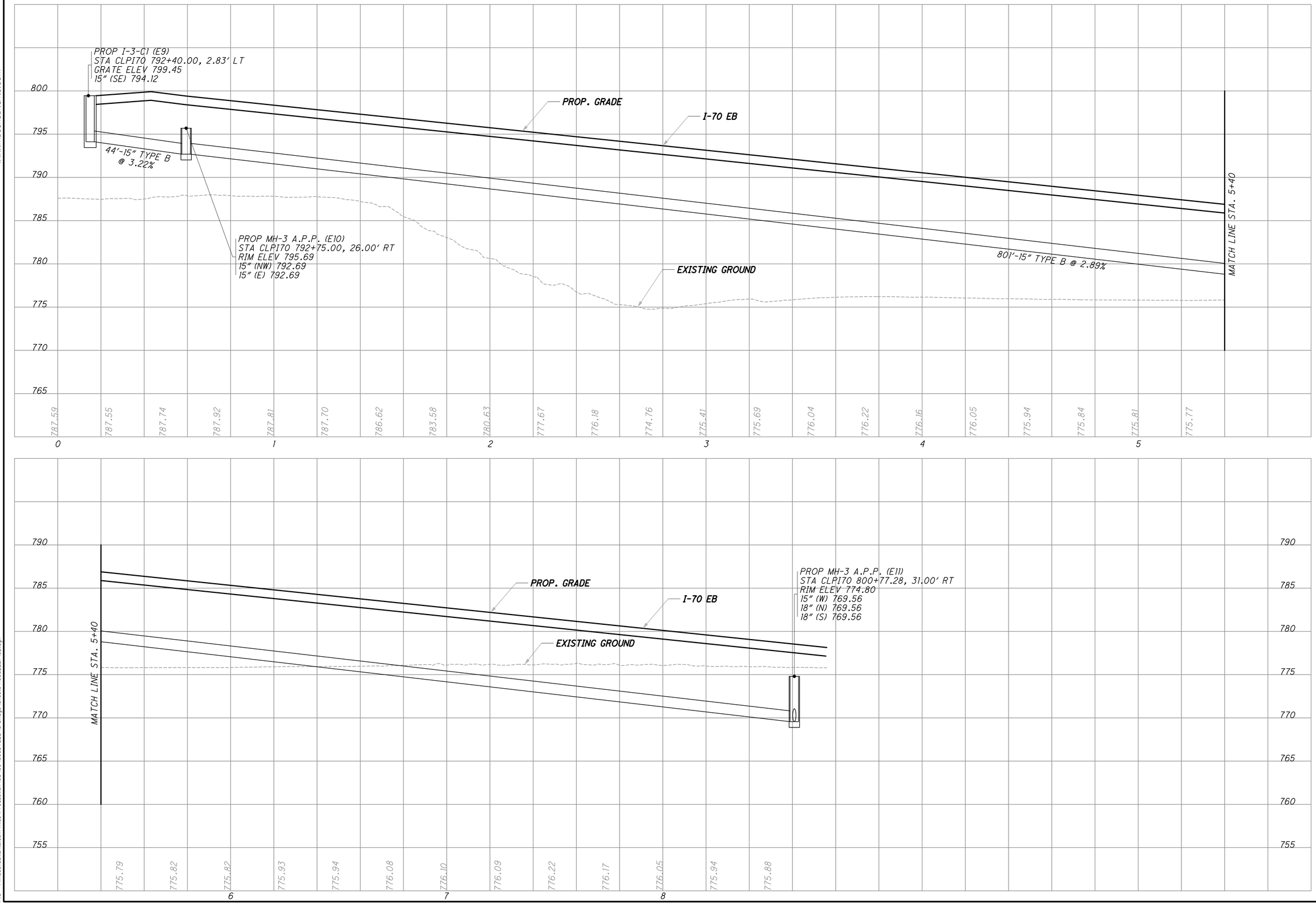

LONGITUDINAL SEWER PROFILES
I-70 E.B.

FRA-70-14.54

CALCULATED

CHECKED

12570
2317

ms consultants, inc.

PLOT.CEL

ms consultants, inc.
msconsultants.com

Ohio DOT Workspace
70\71 East Interchange 2E
www.msconsultants.com

Batchplot Spec: \\msconsultants.com\files\production\03\60\06634_2E\standards\plotdrv\batchplt.spc
Pen Table: \\msconsultants.com\files\Production\03\60\06634_2E\standards\tables\V8i_ms_stg_06634_2E_Plan View.tbl
Plot Driver: \\msconsultants.com\files\Standards\ustn\ohdot\v8i\ms\plotting\PDF.pltcfg

34" x 22"

Model: Sheet
Printed: 1/17/2019 @ 3:36:47 PM
File: \\msconsultants.com\files\Production\03\60\06634_2E\drainage\sheets\105322DF102.dgn
View: SHEET
By: dhall

34" x 22"
Model: Sheet
Printed: 1/18/2019 @ 5:30:47 PM
File: \\msconsultants.com\files\Production\03\60\06634_2E\drainage\sheets\105322DF002.dgn
View: FENCE_VIEW1
By: hbrendlinger
Batchplot Spec: \\msconsultants.com\files\production\03\60\06634_2E\standards\plotdrv\batchplt.spc
Pen Table: \\msconsultants.com\files\Standards\ustn\ohdot\V8i\ms\plotting\pen\V8i_ms_std.tbl
Plot Driver: \\msconsultants.com\files\Standards\ustn\ohdot\v8i\ms\plotting\PDF.pltcfg
PCF: ohdotV8i
PCF: 60-06634_2E_Columbus
0 1"
0.5"
Ohio DOT Workspace
70\71 East Interchange 2E
ms consultants, inc.
msconsultants.com
PLOT.CEL
www.msconsultants.com

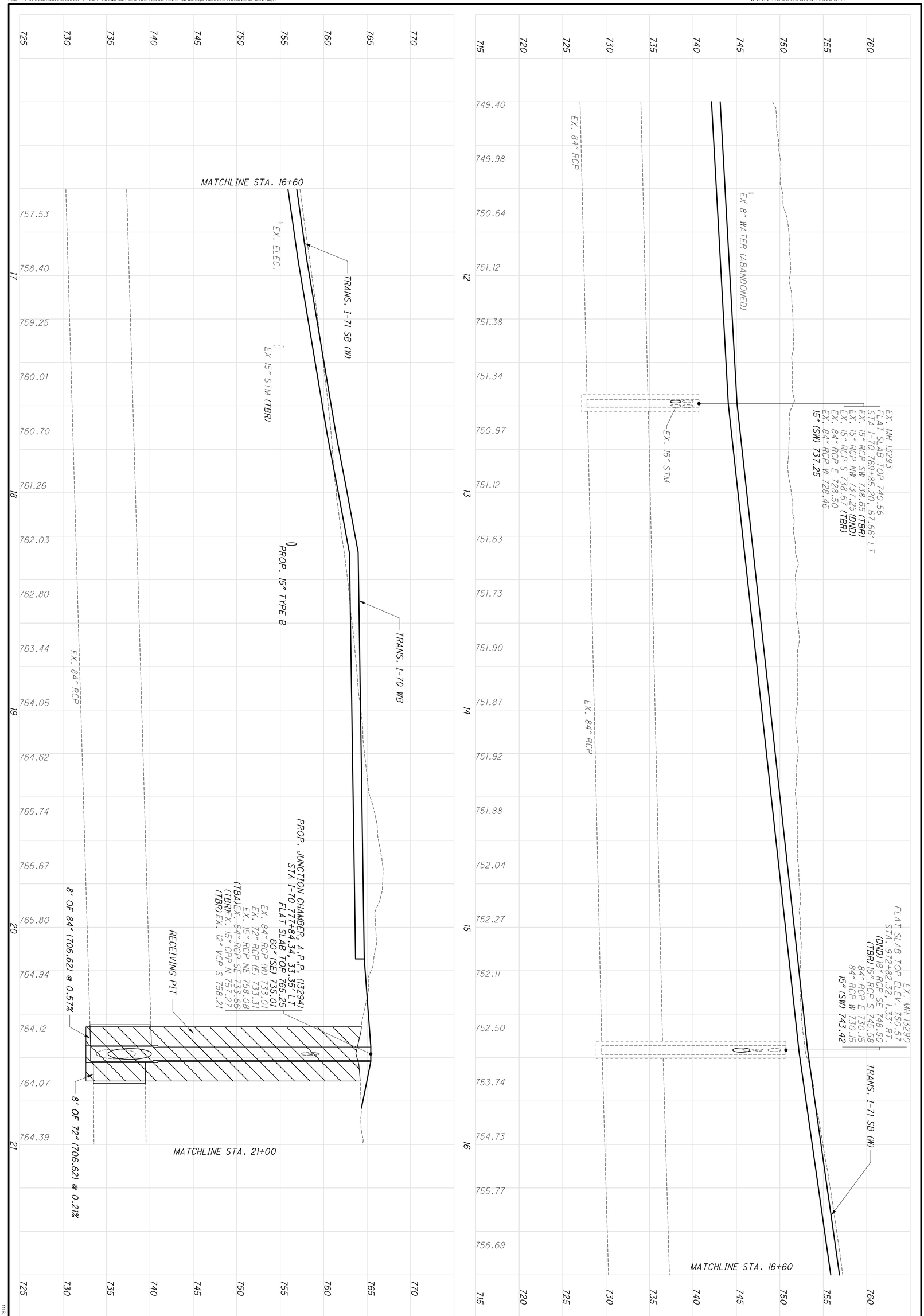

257D / 2317	**FRA-70-14.54**	**LONGITUDINAL SEWER PROFILES** **MAIN TRUNK - NORTH (2)**

CALCULATED
CHECKED

ms consultants, inc.

34" x 22"

Model: Sheet View: SHEET
Printed: 1/17/2019 @ 4:06:13 PM By: dhall
File: \\msconsultants.com\files\Production\03\60\06634_2E\drainage\sheets\105322DF003.dgn

Batchplot Spec: \\msconsultants.com\files\production\03\60\06634_2E\standards\plotdrv\batchplt.spc
Pen Table: \\msconsultants.com\files\Standards\ustn\ohdot\V8i\ms\plotting\pen\V8i_ms_std.tbl
Plot Driver: \\msconsultants.com\files\Standards\ustn\ohdot\v8i\ms\plotting\PDF.pltcfg

0 1"
0.5"

PCF: ohdotV8i
PCF: 60-06634_2E_Columbus

Ohio DOT Workspace
70\71 East Interchange 2E

PLOT.CEL

ms consultants, inc.
msconsultants.com

www.msconsultants.com

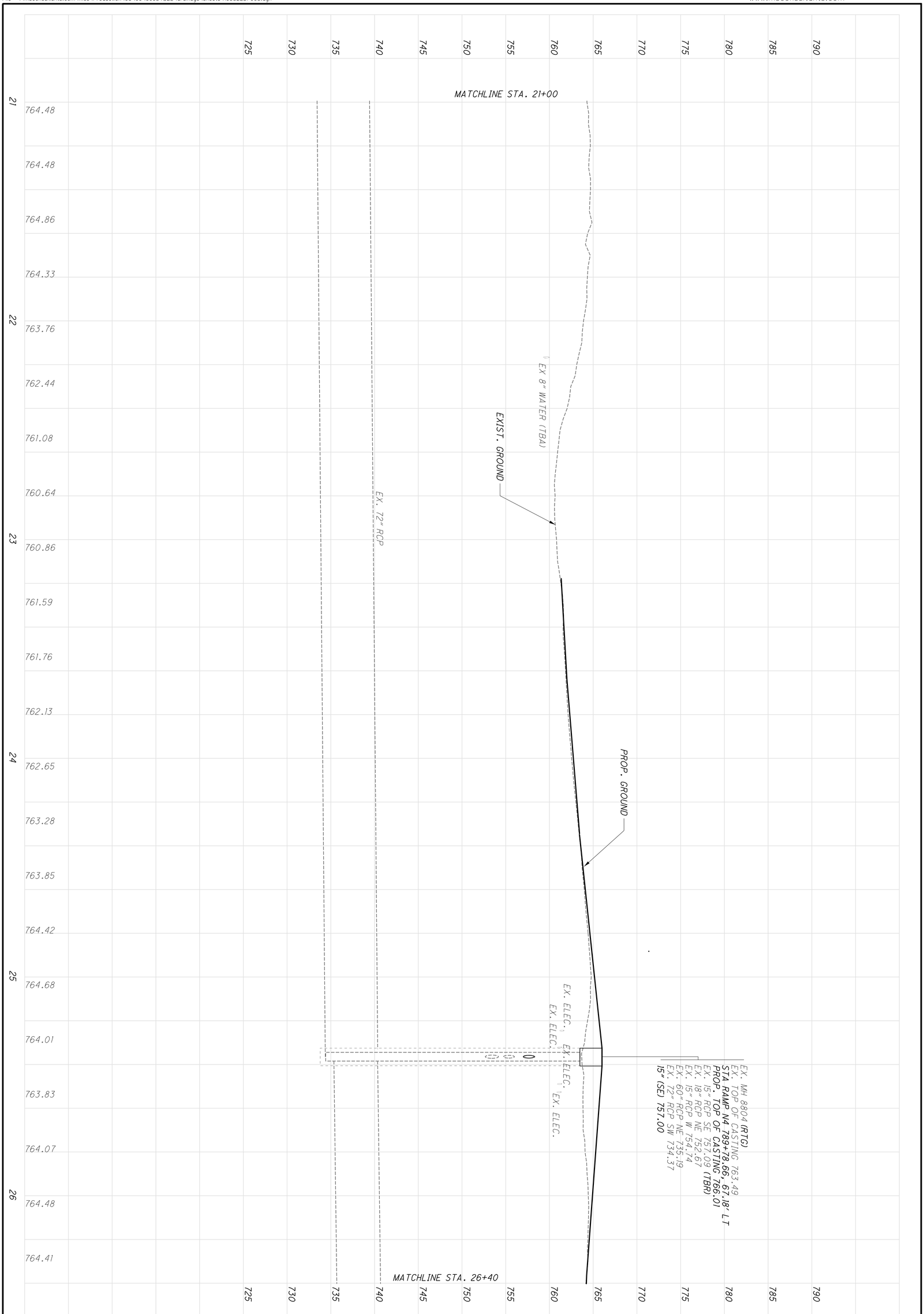

PLOT.CEL

ms consultants, inc.
msconsultants.com

www.msconsultants.com

Ohio DOT Workspace
70\71 East Interchange 2E

0 0.5" 1"

Batchplot Spec: \\msconsultants.com\Files\production\03\60\06634.2E\standards\plotdrv\batchplt.SPC
Pen Table: \\msconsultants.com\Files\Standards\astm\ohdot\V8i\ms\plotting\pen\V8i_ms_std.TBL
Plot Driver: \\msconsultants.com\Files\Standards\astm\ohdot\v8i\ms\plotting\PDF.pltcfg

PDF: ohdot\V8i
PDF: 60-06634_2E_Columbus

Model: Sheet
Printed: 1/17/2019 @ 4:22:14 PM
File: \\msconsultants.com\Files\Production\03\60\06634.2E\drainage\sheets\1053220F005.dgn

View SHEET
By: dhall

34" x 22"

PROP. JUNCTION CHAMBER, A.P.P. (13294)
STA I-70 777+84.34, 33.35' LT
FLAT SLAB TOP 765.25
60" (SE) 735.01
EX. 84" RCP (W) 733.01
EX. 72" RCP (E) 733.31
EX. 15" RCP NE 758.08
EX. 54" RCP SE 733.66(TBA)
EX. 15" CPP N 757.27(TBR)
EX. 12" VCP S 758.21(TBR)

PROP. GROUND

RECEIVING PIT

WALL I-7

EX. ITS

WALL I-8A

EX. ELEC.

EX. ELEC.

RAMP N4

RAMP N4

EX 21" SAN (TBA)

PROP. MH-3, (32)
BASE I.D. 108" MIN.
STA N3 878+64.84, 39.83' LT
TOP OF CASTING 770.75
60" (NW) 738.70
60" (NE) 738.70
18" (NE) 748.06
15" (SE) 766.07
15" (NW) 766.07

JACKING PIT

RAMP N2

EX. 8" WATER (TBA)

RAMP N2

EX 21" SAN (TBA)

PROP. MH-3, A.P.P. (23104)
BASE I.D. 90" MIN.
STA N2 787+65.03, 1.07' RT
FLAT SLAB TOP 759.78
60" (SW) 741.36
60" (E) 741.36
15" (NE) 752.82

255'-60" TYPE B @ 1.44%
BORED OR JACKED

185'-60" TYPE B @ 1.44%

6'-60" TYPE B @ 0.89%

MATCHLINE STA. 5+60.

800 795 790 785 780 775 770 765 760 755 750 745 740 735 730 725 720 715 710 705

767.08 761.81 763.37 764.03 764.72 765.07 766.19 766.90 767.03 766.84 766.60 766.14 765.96 766.10 765.86 765.88 766.08 765.91 765.56 765.37 765.47 766.04 765.03

0 1 2 3 4 5

CALCULATED EC
CHECKED SPK

LONGITUDINAL SEWER PROFILES
EAST TRUNK (1)

FRA-70-14.54

257P
2317

34" x 22"
Model: Sheet View: FENCE_VIEW1
Printed: 6/19/2018 @ 9:20:00 AM By: jdouglas
File: N:\03\60\06634_2E\drainage\sheets\1053222F006.dgn
Batchplot Spec: \\msconsultants.com\files\production\03\60\06634_2E\standards\plotdrv\batchplt.spc
Pen Table: N:\03\60\06634_2E\standards\tables\V8i_ms_std_06634_2D_Plan View.tbl
Plot Driver: \\msconsultants.com\files\Standards\ustn\ohdot\v8i\ms\plotting\PDF.pltcfg
DGF: ohdotV8i
PCF: 60-06634_2E_Columbus
Ohio DOT Workspace
70\71 East Interchange 2E
0 1"
0.5"
ms consultants, inc.
msconsultants.com
PLOT.CEL
www.msconsultants.com

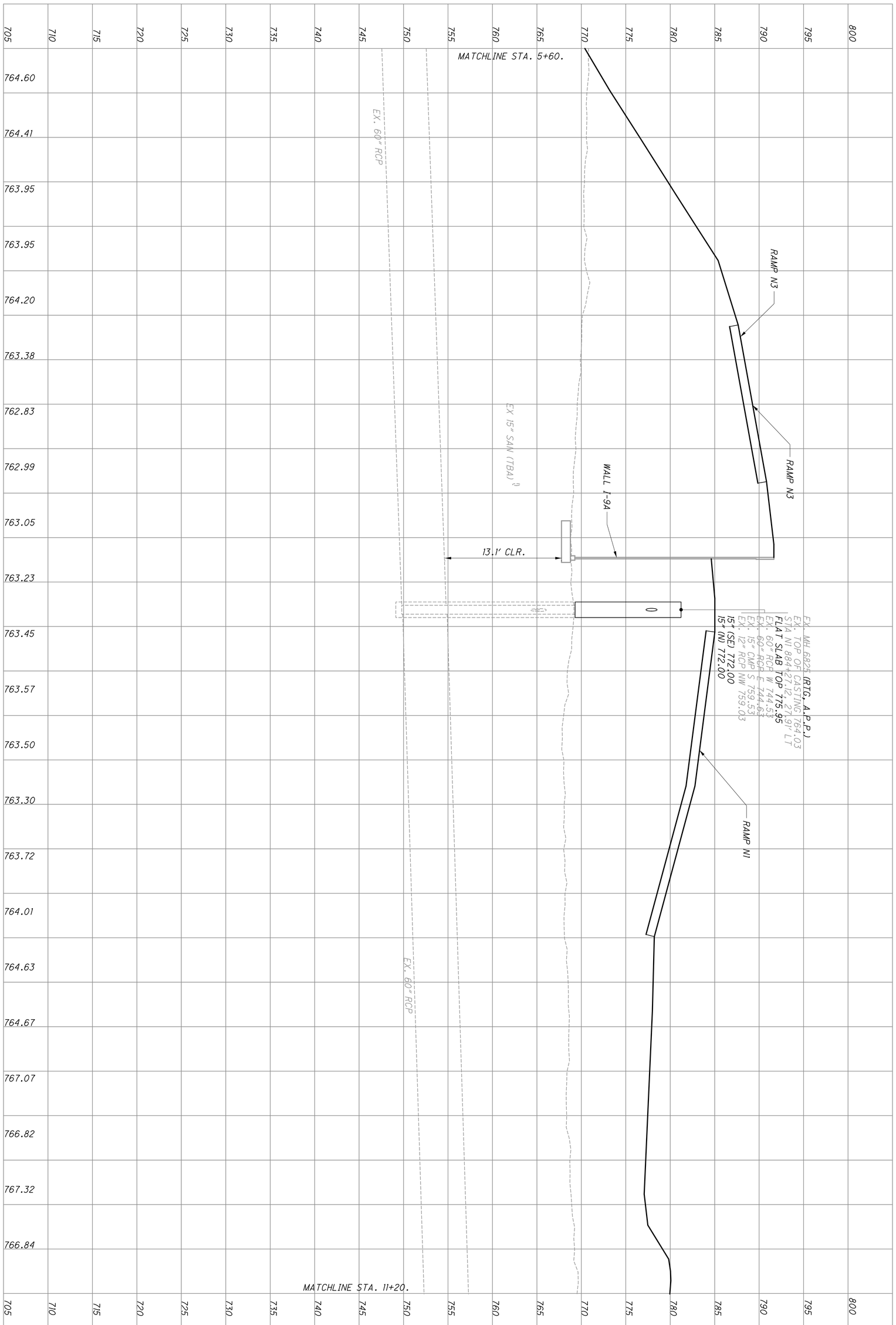

2576 / 2317	FRA-70-14.54	LONGITUDINAL SEWER PROFILES EAST TRUNK (2)

CALCULATED
CHECKED

ms consultants, inc.

PLOT.CEL

ms consultants, inc.
msconsultants.com

Ohio DOT Workspace
70\71 East Interchange 2E
www.msconsultants.com

1"
0.5"
0

ODF: ohdot\V8i
PCF: 60-06634_2E_Columbus

Batchplot Spec: \\msconsultants.com\Files\production\Q3\60\06634_2E\standards\plotdr\batchplt.spc
Pen Table: N:\Q3\60\06634_2E\standards\tables\V8i_ms_std_06634_2D_Plan View.tbl
Plot Driver: \\msconsultants.com\Files\Standards\usetn\ohdot\v8i\ms\plotting\PDF.pltcfg

Model: Sheet
Printed: 6/19/2018 @ 9:20:01 AM
File: N:\Q3\60\06634_2E\drainage\sheets\1053220F007.dgn

View: FENCE_VIEW1
By: jdougias

34" x 22"

CALCULATED | CHECKED

LONGITUDINAL SEWER PROFILES
EAST TRUNK (3)

EX. MH 6836 (RTG)
EX. TOP OF CASTING 765.39
STA N1 887+61.27, 34.30' RT
TOP OF CASTING 774.92
EX. 60" RCP E 747.26
EX. 60" RCP W 747.26
EX. 15" RCP N 756.79 (TBR)
15" (N) 757.50
15" (W) 763.45
15" (SW) 770.12

EX. MH, 7862 (RTG)
EX. TOP OF CASTING 765.97
STA MOOBERRY 888+43.05, 44.30' RT
TOP OF CASTING 774.64
EX. 60" RCP E 748.11
EX. 60" RCP W 748.11
EX. 18" RCP S 758.12 (TBR)
EX. 15" RCP N 757.17 (TBR)
EX. 18" RCP S 750.19
12" (NE) 766.42
18" (SW) 766.95

EX. MH, 13772 (RTG)
EX. TOP OF CASTING 783.55
STA MOOBERRY 890+78.57, 69.83' RT
TOP OF CASTING 780.00
EX. 60" RCP W 750.10
EX. 60" RCP E 750.20
EX. 15" RCP SE 777.55 (TBR)
EX. 15" RCP N 761.86 (TBR)
12" (NW) 770.12

PARSONS AVE.
CHILDRENS DR.
AMBULANCE DR.
EXIST. GROUND
EX. 60" RCP
EX. 60" RCP
EX. 60" RCP

MATCHLINE STA. 111+20.
MATCHLINE STA. 16+80.

800	795	790	785	780	775	770	765	760	755	750	745	740	735	730	725	720	715	710	705

12							13							14							15							16						
767.21	768.67	770.32	771.89	773.93	776.11	778.99	781.30	783.07	783.13	783.33	783.50	783.93	783.59	784.36	784.51	784.33	784.31	784.34	784.54	784.52	784.67	784.96

FRA-70-14.54

1258
2317

ms consultants, inc.

34" x 22"
Model: Sheet View: FENCE_VIEW1
Printed: 6/19/2018 @ 9:20:02 AM By: jdouglas
File: N:\03\60\06634_2E\drainage\sheets\105322DF008.dgn
Batchplot Spec: \\msconsultants.com\files\production\03\60\06634_2E\standards\plotdrv\batchplt.spc
Pen Table: N:\03\60\06634_2E\standards\tables\V8i_ms_std_06634_2D_Plan View.tbl
Plot Driver: \\msconsultants.com\files\Standards\ustn\ohdot\v8i\ms\plotting\PDF.pltcfg
OCF: ohdotV8i
PCF: 60-06634_2E_Columbus
Ohio DOT Workspace
70\71 East Interchange 2E
www.msconsultants.com
ms consultants, inc.
msconsultants.com
PLOT.CEL

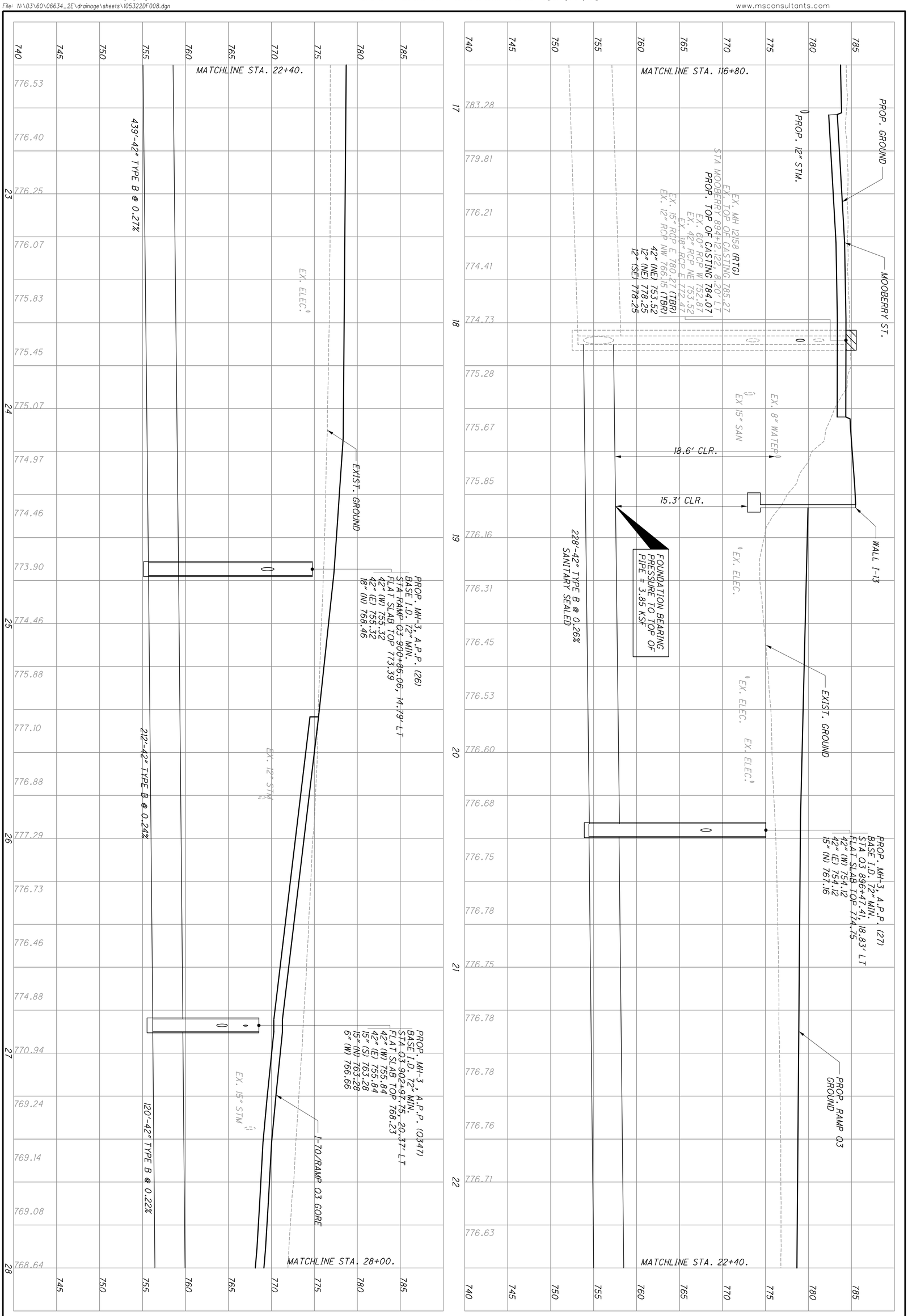

LONGITUDINAL SEWER PROFILES
EAST TRUNK (4)

CALCULATED EC
CHECKED SPK

PLOT.CEL

ms consultants, inc.
msconsultants.com

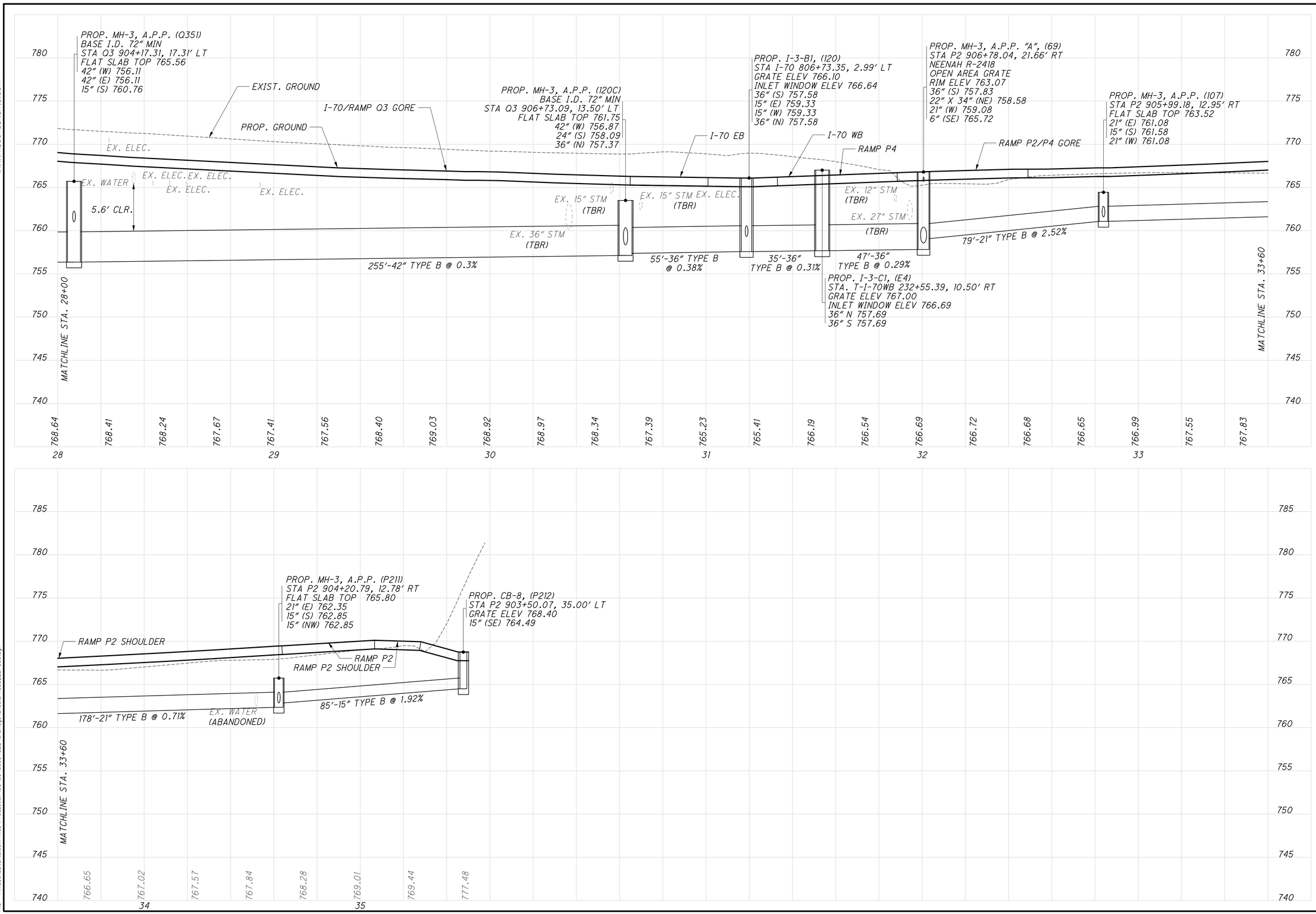

CALCULATED EC
CHECKED SPK

LONGITUDINAL SEWER PROFILES
EAST TRUNK (5)

FRA-70-14.54

258B
2317

ms consultants, inc.

Ohio DOT Workspace
70\71 East Interchange 2E
www.msconsultants.com

1" 0.5" 0

Batchplot Spec: \\msconsultants.com\files\Production\03\60\06634.2E\standards\plotdrv\batchplt.SPC
Pen Table: \\msconsultants.com\files\Standards\astm\ohdot\V8i\ms\plotting\pen\V8i_ms_std.tbl
Plot Driver: \\msconsultants.com\files\Standards\astm\ohdot\v8i\ms\plotting\PDF.pltcfg

PDF: ohdotV8i
PDF: 60-06634_2E_Columbus

34" x 22"

Model: Sheet
Printed: 1/17/2019 @ 4:36:31 PM
File: \\msconsultants.com\files\Production\03\60\06634.2E\drainage\sheets\1053220F009.dgn

View: SHEET
By: dhall

PLOT.CEL

ms consultants, inc.
msconsultants.com

www.msconsultants.com

Ohio DOT Workspace
70\71 East Interchange 2E

1"
0
0.5"

ohdot\V8i
60-06634_2E_Columbus

Batchplot Spec: \\msconsultants.com\files\production\03\60\06634_2E\standards\plotdrv\batchplt.SPC
Pen Table: \\msconsultants.com\files\Standards\astm\ohdot\V8\ms\plotting\pen\V8i_ms_std.TBL
Plot Driver: \\msconsultants.com\files\Standards\astm\ohdot\v8i\ms\plotting\PDF.pltcfg

34" x 22"

View: SHEET
By: dhall

Model: Sheet
Printed: 1/17/2019 @ 4:52:12 PM
File: \\msconsultants.com\files\Production\03\60\06634_2E\drainage\sheets\1053220F013.dgn

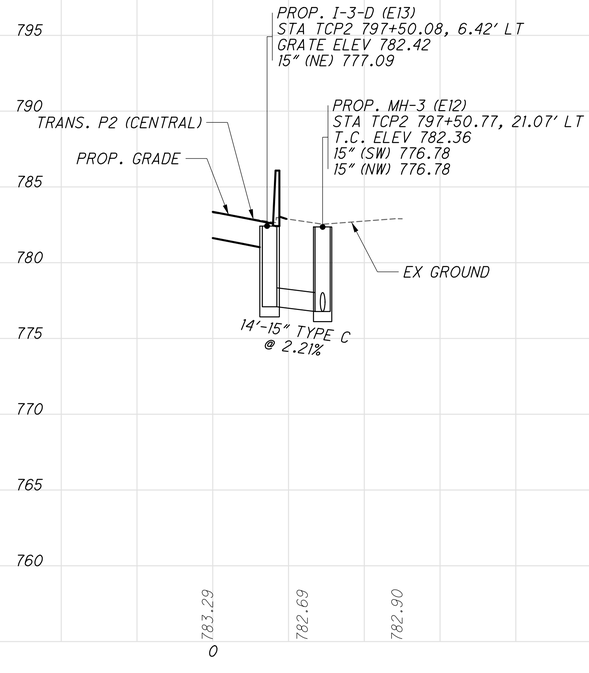

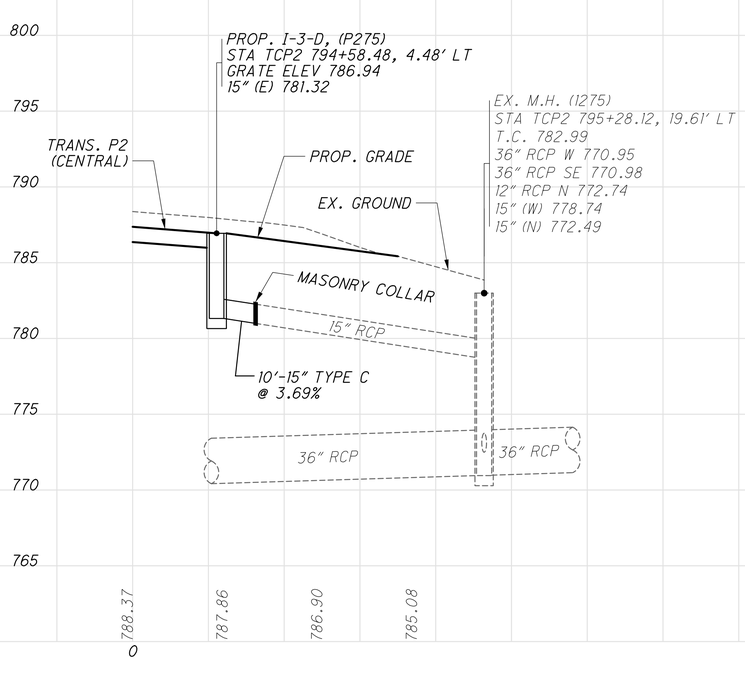

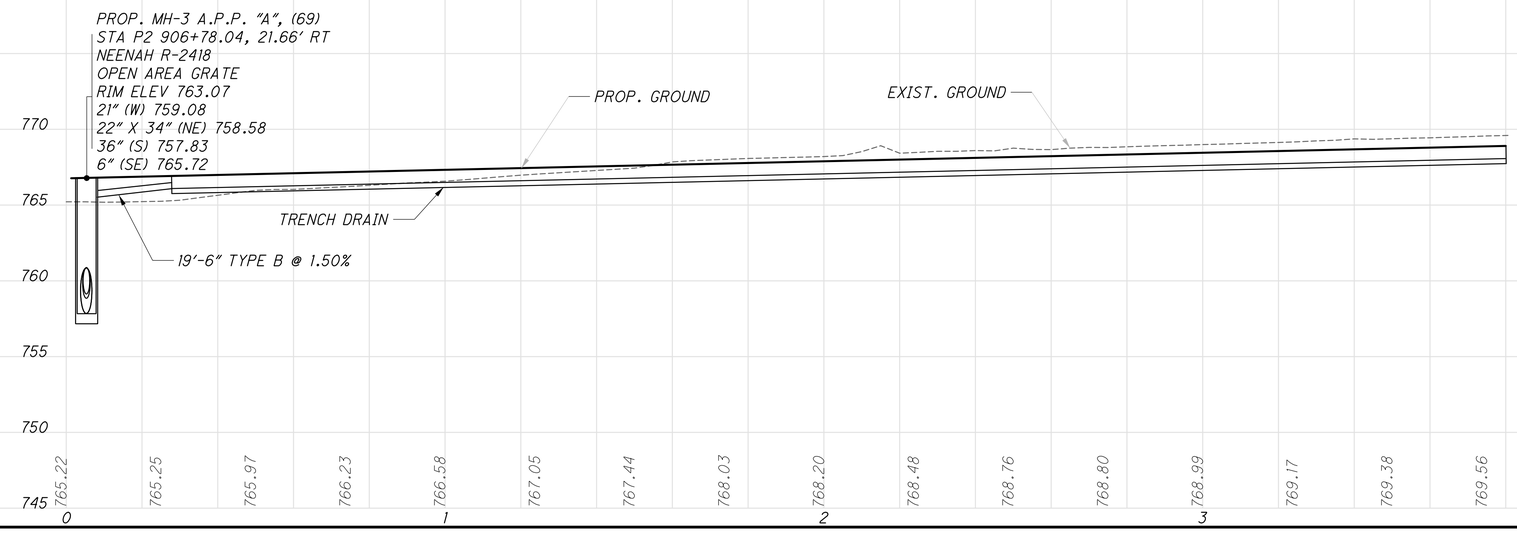

CALCULATED | CHECKED

LONGITUDINAL SEWER PROFILES
RAMP P (4)

FRA-70-14.54

2580
2317

ms consultants, inc.

PLOT.CEL

ms consultants, inc.
msconsultants.com

www.msconsultants.com
Ohio DOT Workspace
70\71 East Interchange 2E

PCF: 60-06634_2E_Columbus
DF: ohdot\V8i

Batchplot Spec: \\msconsultants.com\files\production\03\60\06634_2E\standards\plotdrv\batchplt.spc
Pen Table: N:\03\60\06634_2E\standards\tables\V8i_ms_std_06634_2D_Plan View.tbl
Plot Driver: \\msconsultants.com\files\Standards\ustn\ohdot\v8i\ms\plotting\PDF.pltdrv

Model: Sheet
Printed: 6/19/2018 @ 9:20:07 AM
File: N:\03\60\06634_2E\drainage\sheets\05322019.dgn
View: FENCE_VIEW1
By: jdouglas

34" x 22"

CALCULATED | CHECKED

LONGITUDINAL SEWER PROFILES
RAMP P (5)

FRA-70-14.54

258D
2317

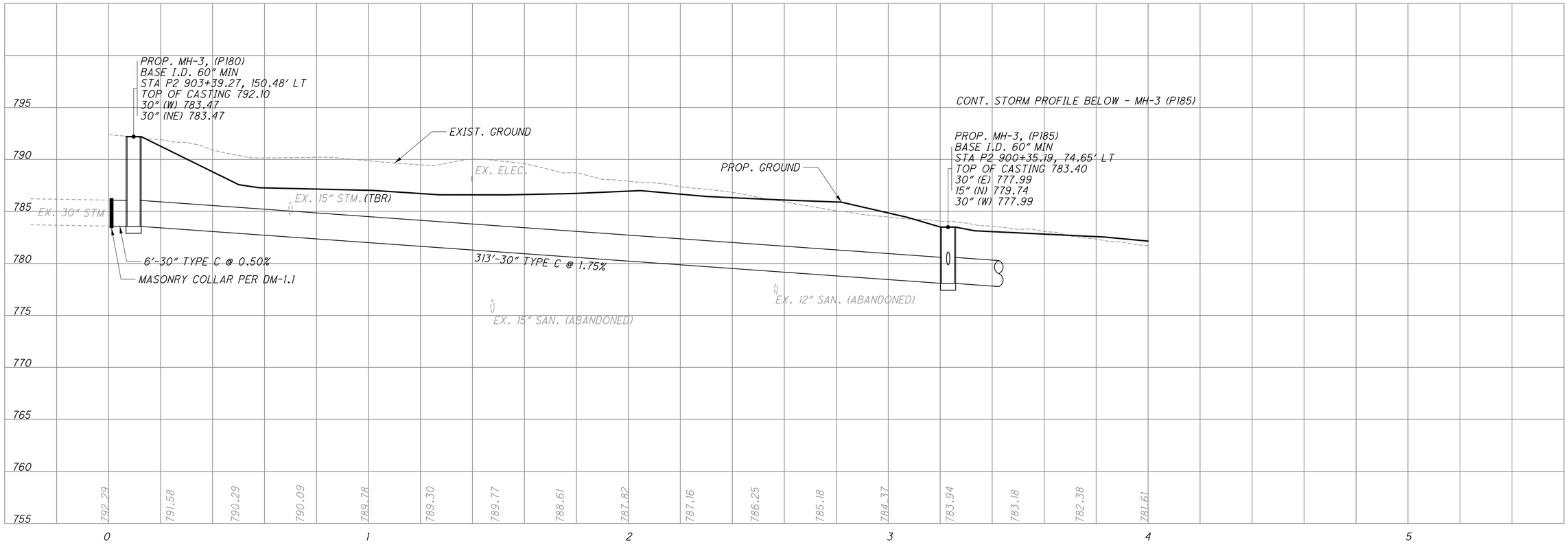

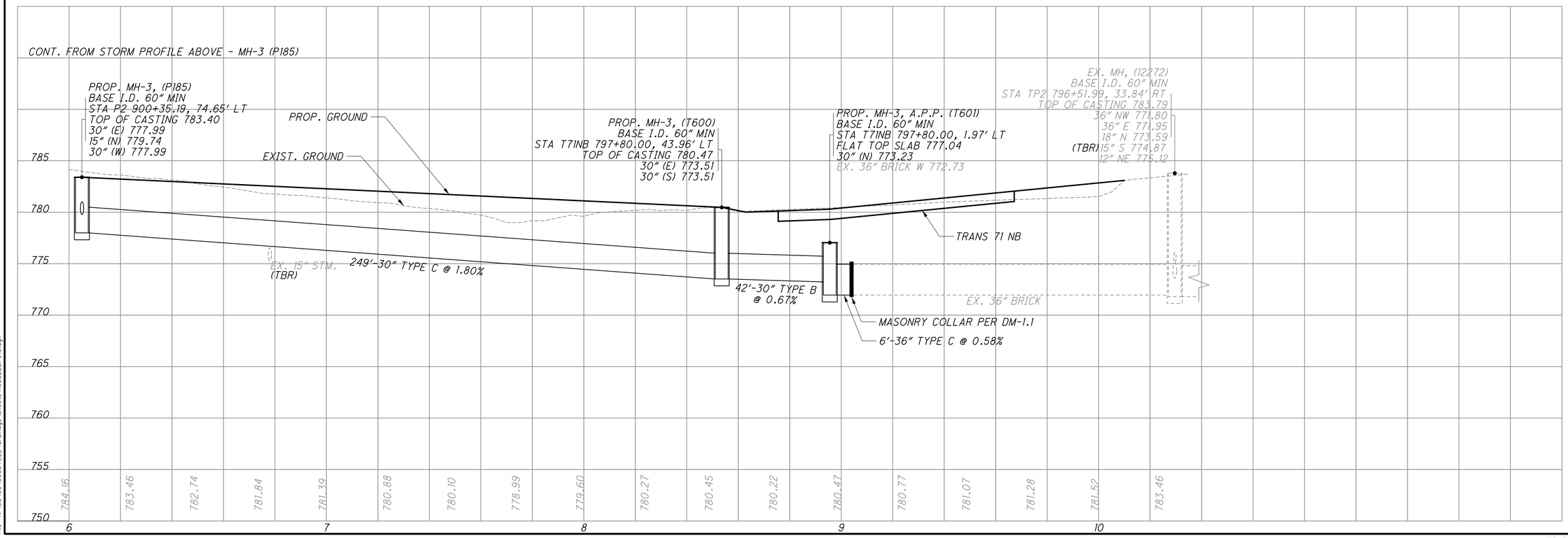

PLOT.CEL

ms consultants, inc.
msconsultants.com

www.msconsultants.com
Ohio DOT Workspace
70\71 East Interchange 2E

0 0.5" 1"

Batchplot Spec: \\msconsultants.com\files\Production\03\60\06634_2E\standards\plotdrv\batchplt.SPC
Pen Table: \\msconsultants.com\files\Standards\ustn\ohdot\V8i\ms\plotting\pen\V8i_ms_std.tbl
Plot Driver: \\msconsultants.com\files\Standards\ustn\ohdot\v8i\ms\plotting\PDF.pltcfg

Model: Sheet
Printed: 1/17/2019 @ 5:04:36 PM
File: \\msconsultants.com\files\Production\03\60\06634_2E\drainage\sheets\1053220F024.dgn
View: SHEET
By: dhall
34" x 22"

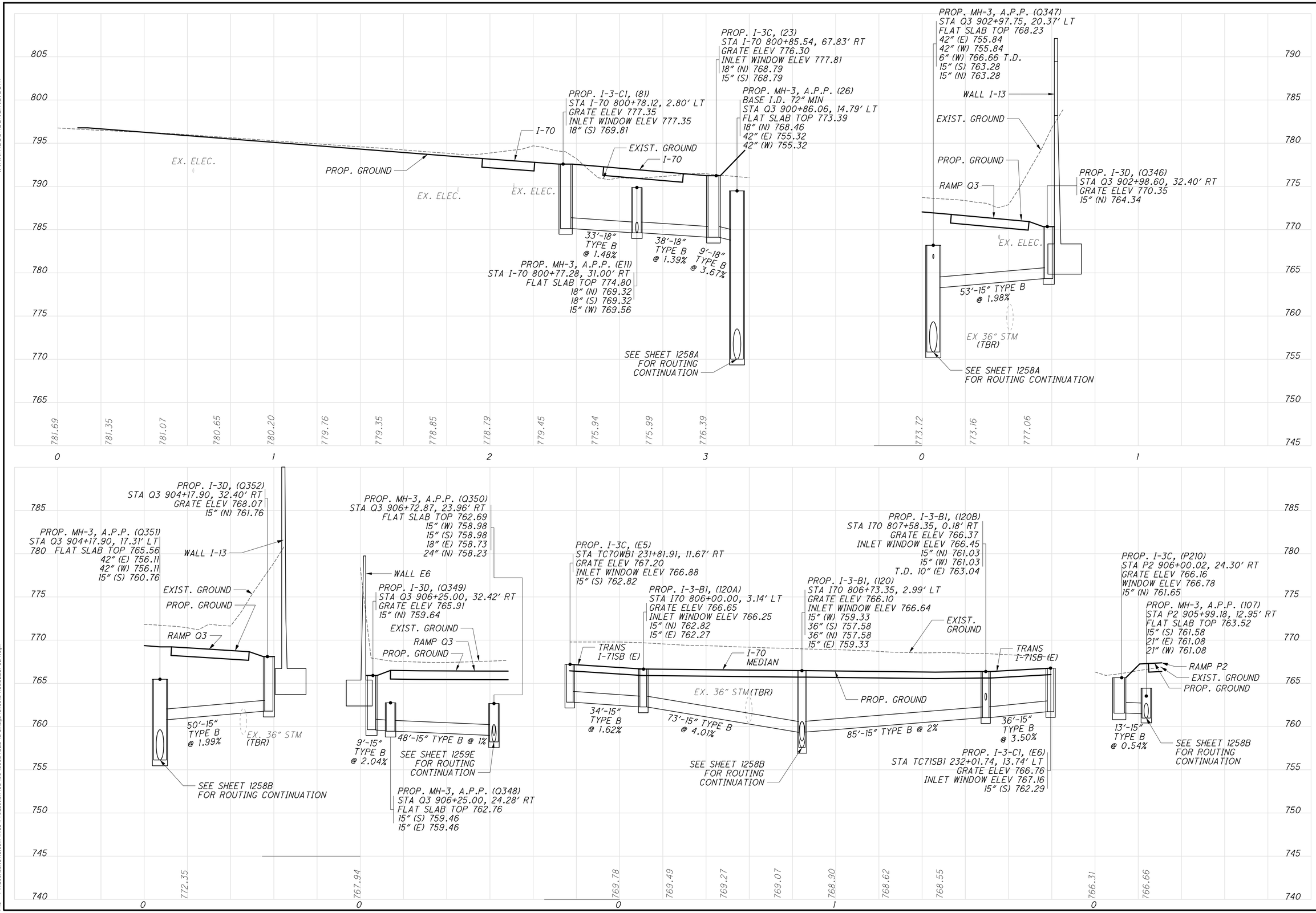

CALCULATED | CHECKED

LONGITUDINAL SEWER PROFILES
RAMP P (7)

FRA-70-14.54

258E
2317

ms consultants, inc.

PLOT.CEL

ms consultants, inc.
msconsultants.com

www.msconsultants.com
Ohio DOT Workspace
70\71 East Interchange 2E

DGN: ohdot\V8i
PCF: 60-06634_2E_Columbus

Batchplot Spec: \\msconsultants.com\files\v8production\03\60\06634_2E\standards\plotdr\batchplt.spc
Pen Table: N:\03\60\06634_2E\standards\tables\V8i_ms_std_06634_2D_Plan View.tbl
Plot Driver: \\msconsultants.com\files\v8production\03\60\06634_2E\standards\usetn\ohdot\v8i\ms\plotting\PDF.pltcfg

Model: Sheet
Printed: 6/19/2018 @ 9:20:10 AM
File: N:\03\60\06634_2E\drainage\sheets\05322DR025.dgn

View: FENCE_VIEW1
By: jdouglas

34" x 22"

CALCULATED | CHECKED

LONGITUDINAL SEWER PROFILES
RAMP P (8)

EX. MH, (54)
STA TEP2 62+34.61, 93.34' LT
TOP OF CASTING 792.56
EX. 12" RCP W 788.28
EX. 6" CMP N 788.75
15" (S) 788.26

EX. 6" WATER
MASONRY COLLAR PER DM-1.1
10'-15" TYPE F @ 1.00%
2'-15" TYPE C @ 1.00%
1.5' MIN.
54'-15" @ 48.95% TYPE C
701.09
707.21

PROP. MH-3, A.P.P. (59)
STA TP2 62+50.23, 20.93' LT
FLAT SLAB TOP 767.10
15" (E) 764.27
15" (N) 764.27
15" (SE) 764.27
24" (W) 763.52

EXIST. GROUND
PROP. GROUND
EX. 15" STM.
EX. 8" WATER (TBA)

MASONRY COLLAR PER DM-1.1
10'-15" TYPE F @ 1.00%
3'-15" TYPE C @ 1.00%
227'-24" TYPE B @ 0.48%

PROP. MH-3, A.P.P. (63)
STA TP2 60+22.63, 17.64' LT
FLAT SLAB TOP 766.00
24" (E) 762.42
15" (NE) 763.17
24" (W) 762.42

122'-24" TYPE B @ 0.83%

PROP. MH-3, A.P.P. (83)
STA TEP2 59+00.00, 18.00' LT
FLAT SLAB TOP 764.99
24" (E) 761.41
15" (N) 762.16
24" (W) 761.41

112'-24" TYP
@ 0.73%

MATCHLINE STA. 5+20

795 790 785 780 775 770 765 760 755 750

792.35 794.22 782.63 770.64 769.69 770.47 770.57 770.82 771.34 772.15 772.80 772.99 772.96 773.83 774.66 776.10 776.82 777.55 775.76 766.78 766.76

0 1 2 3 4 5

MATCHLINE STA. 5+20

PROP. MH-3, A.P.P. (82)
STA TEP2 57+87.38, 16.72' LT
FLAT SLAB TOP 764.17
24" (E) 760.59
15" (N) 761.34
22" X 34" (W) 760.34

PROP. MH-3, A.P.P. (50)
STA P2 907+24.49, 15.59' LT
FLAT SLAB TOP 763.53
22" X 34" (E) 759.95
15" (N) 760.95
22" X 34" (SW) 759.95

RAMP P2

PROP. MH-3, A.P.P. "A" (69)
STA P2 906+78.04, 21.66' RT
NEENAH R-2418
OPEN AREA GRATE
RIM ELEV 766.80
22" X 34" (NE) 758.58
21" (W) 759.08
36" (S) 757.83
6" (SE) 765.72 T.D.

E B
63'-22" X 34" TYPE B @ 0.62%
60'-22" X 34" TYPE B @ 2.28%

785 780 775 770 765 760 755 750

766.66 766.55 766.53 766.47 766.12 765.67

6

PROP. CB-8, (56)
STA P2 904+25.33, 27.79' RT
GRATE ELEV 767.45
15" (N) 763.05

PROP. GROUND
RAMP P2
EXIST. GROUND

16'-15" TYPE B @ 1.25%

PROP. MH-3, A.P.P. (P211)
STA P2 904+20.79, 12.78' RT
FLAT SLAB TOP 765.80
21" (E) 762.35
15" (S) 762.85
15" (NW) 762.85

780 775 770 765 760 755 750 745

769.00 767.92

0

FRA-70-14.54

258P
2317

ms consultants, inc.

PLOT.CEL

ms consultants, inc.
msconsultants.com

www.msconsultants.com

Ohio DOT Workspace
70\71 East Interchange 2E

0 0.5" 1"

OPT: obdot V8i
Plot Plan View tbl
HP: 60-06634_2E_Columbus

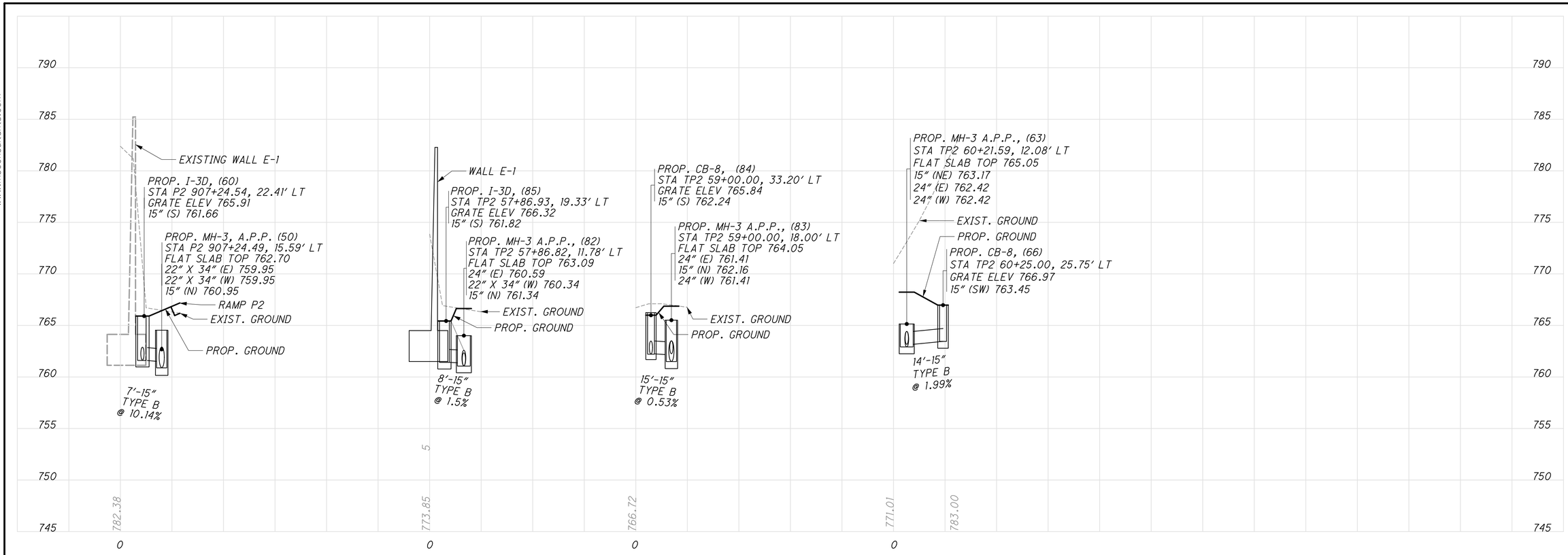

CALCULATED | CHECKED

LONGITUDINAL SEWER PROFILES
RAMP P (9)

FRA-70-14.54

2580
2317

ms consultants, inc.

Batchplot Spec: \\msconsultants.com\files\production\03\60\06634_2E\standards\plotdrv\batchplt.spc
Pen Table: \\msconsultants.com\files\Production\03\60\06634_2E\standards\tables\V8i_ms_11x17_60-06634_2E_Columbus.tbl
Plot Driver: \\msconsultants.com\files\Standards\ustn\ohdot\v8i\ms\plotting\PDF.pltcfg

Model: Sheet
Printed: 1/17/2019 @ 5:25:57 PM View: SHEET
File: \\msconsultants.com\files\Production\03\60\06634_2E\drainage\sheets\1053220F026.dgn By: dhall

34" x 22"

PLOT.CEL

ms consultants, inc.
msconsultants.com

Ohio DOT Workspace
70\71 East Interchange 2E
www.msconsultants.com

1"
0
0.5"

Batchplot Spec: \\msconsultants.com\files\Production\03\60\06634_2E\standards\plotdrv\batchplt.SPC
Pen Table: \\msconsultants.com\files\Standards\astm\ohdot\V8i\ms\plotting\pen\V8i_ms_std.tbl
Plot Driver: \\msconsultants.com\files\Standards\astm\ohdot\v8i\ms\plotting\PDF.prtcfg

Model: Sheet
Printed: 1/11/2019 @ 11:52:06 AM
File: \\msconsultants.com\files\Production\03\60\06634_2E\drainage\sheets\1053220F020.dgn

View: SHEET
By: dhall

34" x 22"

CALCULATED | CHECKED

LONGITUDINAL SEWER PROFILES
RAMP N (3)

FRA-70-14.54

1259
2317

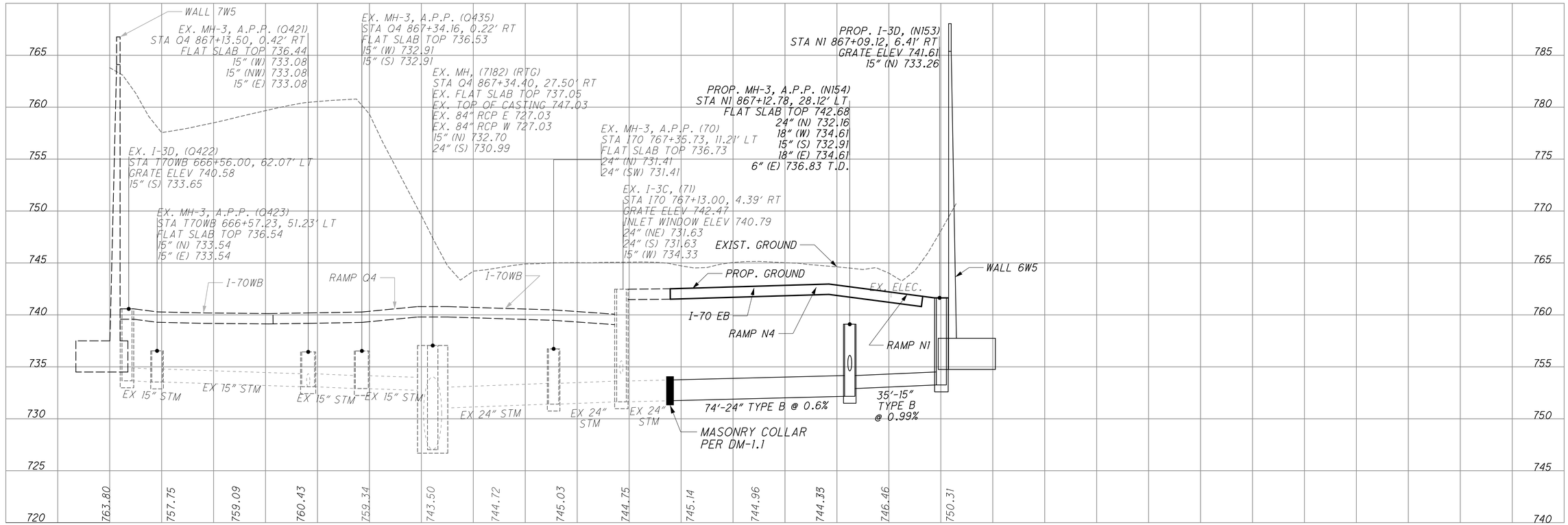

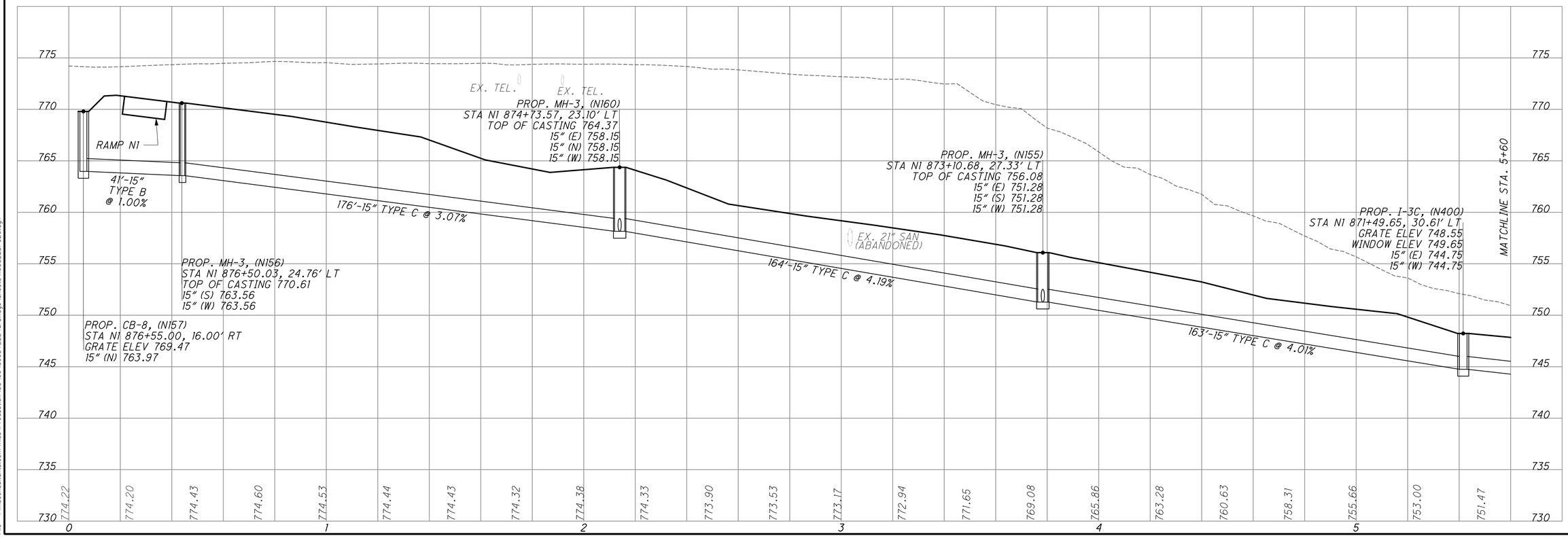

PLOT.CEL

ms consultants, inc.
msconsultants.com

Ohio DOT Workspace
70\71 East Interchange 2E
www.msconsultants.com

1" 0.5" 0

Batchplot Spec: \\msconsultants.com\files\Production\03\60\06634_2E\standards\oldot\batchplt.SPC
Pen Table: \\msconsultants.com\files\Standards\astm\ohdot\V8i\ms\plotting\pen\V8i_ms_std.tbl DGN: ohdot.V8i
Plot Driver: \\msconsultants.com\files\Standards\astm\ohdot\v8i\ms\plotting\PDF.pltcfg DWG: 60-06634_2E_Columbus

Model: Sheet @ 9:07:09 AM View: SHEET
Printed: 1/18/2019 By: dhall
File: \\msconsultants.com\files\Production\03\60\06634_2E\drainage\sheets\1053220F021.dgn

34" x 22"

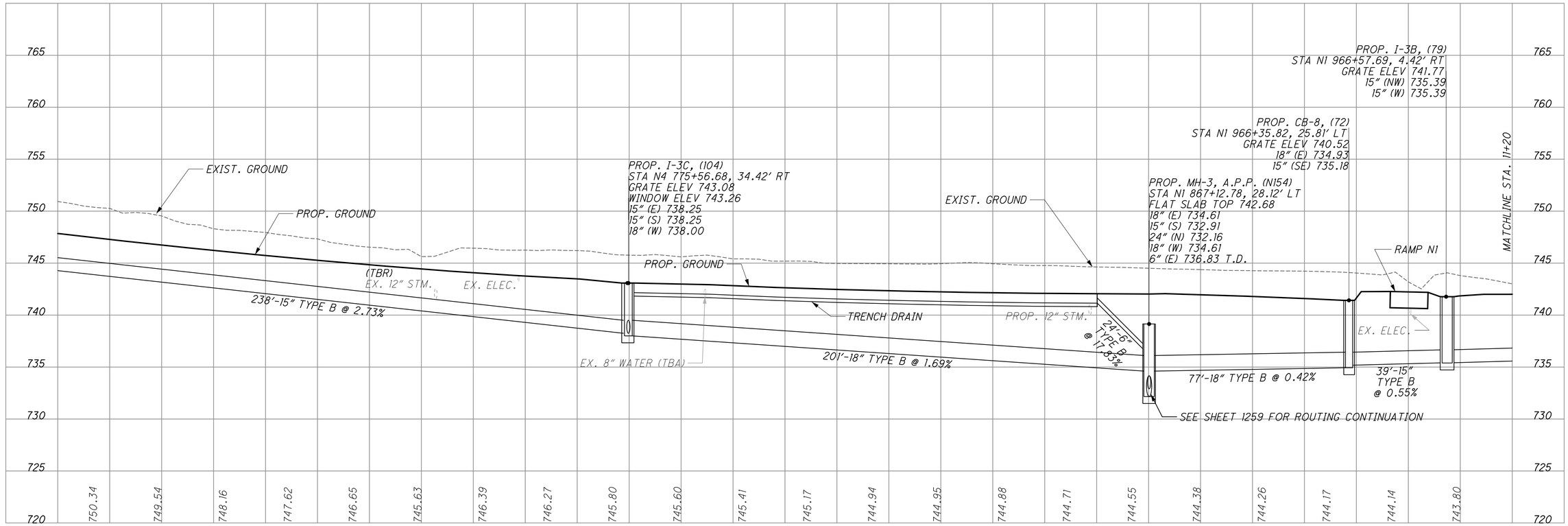

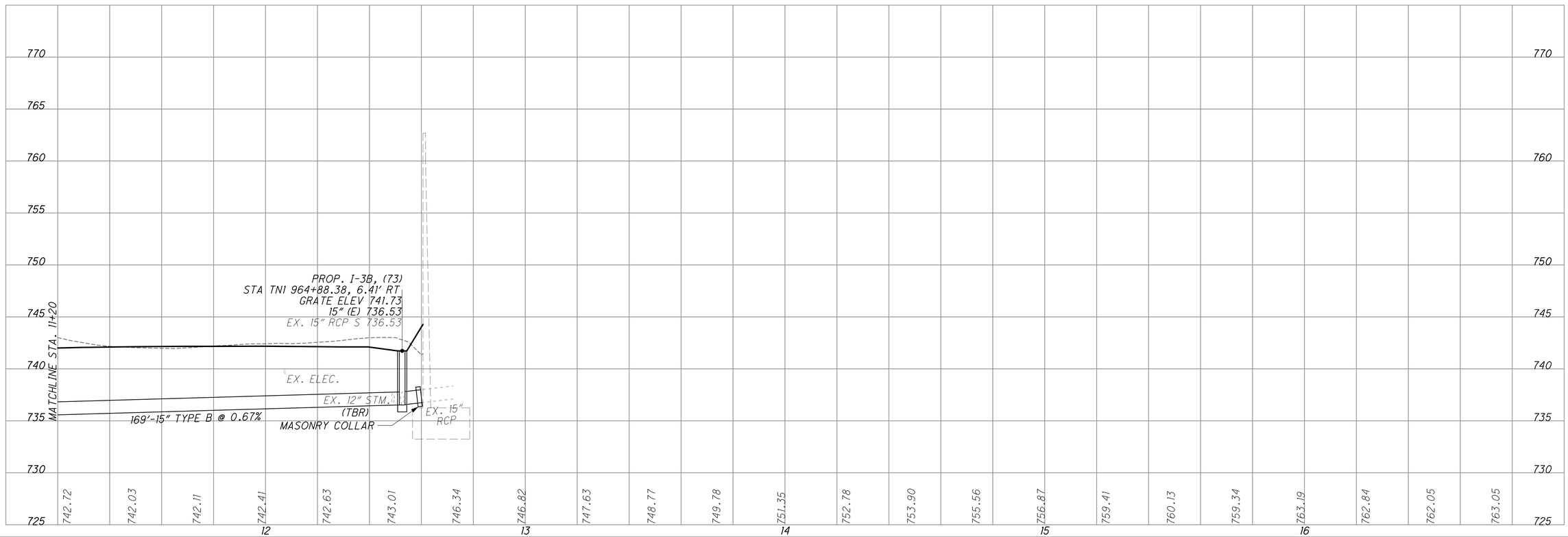

CALCULATED | CHECKED

LONGITUDINAL SEWER PROFILES
RAMP N (4)

FRA-70-14.54

259A
2317

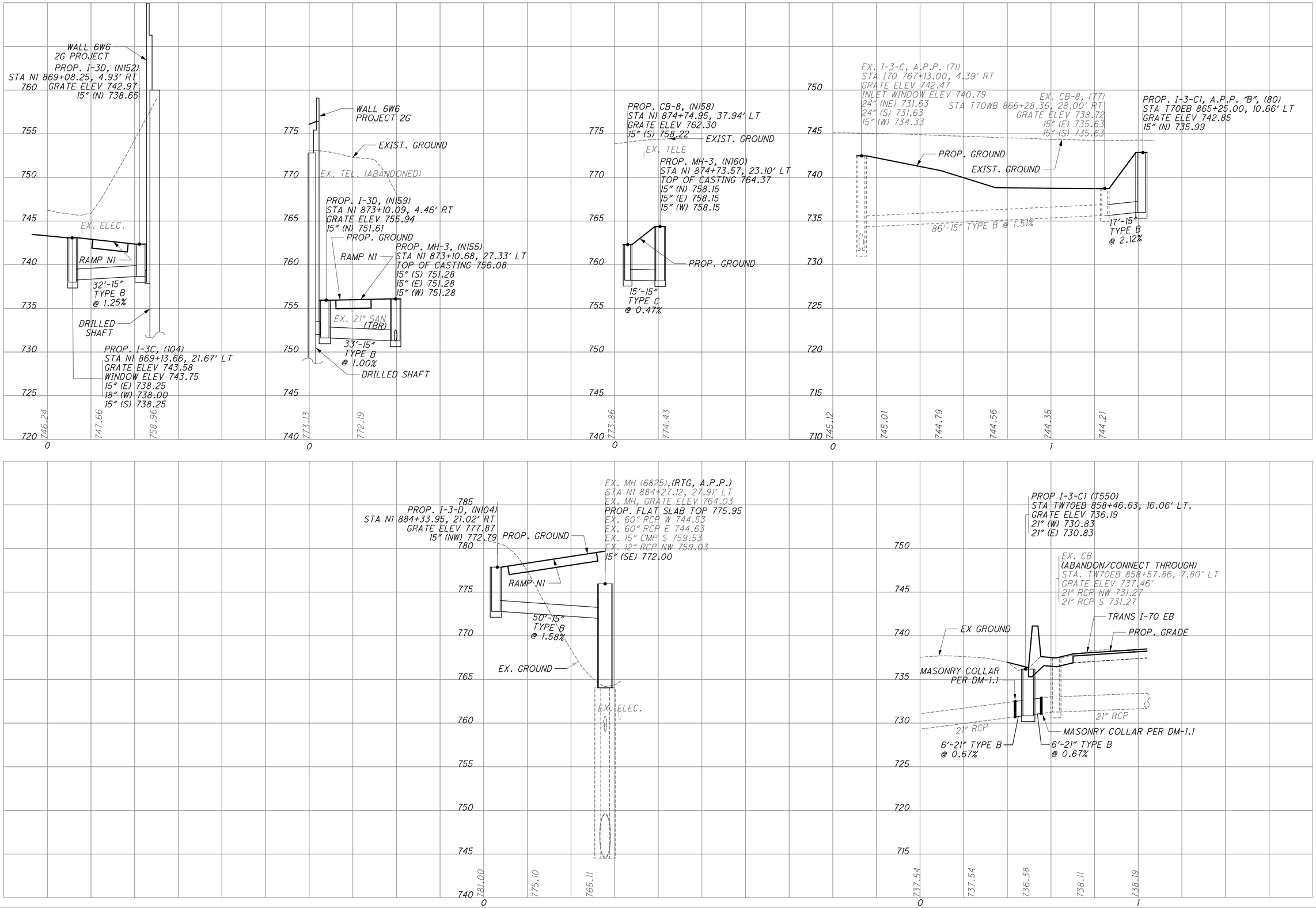

PLOT.CEL

ms consultants, inc.
msconsultants.com

Ohio DOT Workspace
70\71 East Interchange 2E
www.msconsultants.com

Batchplot Spec: \\msconsultants.com\files\production\03\60\06634_2E\standards\plotdrv\batchplt.spc
Pen Table: \\msconsultants.com\files\Standards\ustn\ohdot\V8i\ms\plotting\pen\V8i_ms_std.tbl
Plot Driver: \\msconsultants.com\files\Standards\ustn\ohdot\v8i\ms\plotting\PDF.pltcfg

34" x 22"

Model: Sheet
Printed: 1/18/2019 @ 9:30:00 AM
File: \\msconsultants.com\files\Production\03\60\06634_2E\drainage\sheets\105322DF022.dgn
View: SHEET
By: dhall

CALCULATED
CHECKED

LONGITUDINAL SEWER PROFILES
RAMP N & TRANS. I-70 EB

FRA-70-14.54

1259B
2317

ms consultants, inc.

PLOT.CEL

ms consultants, inc.
msconsultants.com

Ohio DOT Workspace
70\71 East Interchange 2E
www.msconsultants.com

0 0.5" 1"

Batchplot Spec: \\msconsultants.com\files\Production\03\60\06634_2E\standards\plotdrv\batchplt.SPC
Pen Table: \\msconsultants.com\files\Standards\astm\ohdot\V8i\ms\plotting\pen\V8i_ms_std.tbl
Plot Driver: \\msconsultants.com\files\Standards\astm\ohdot\v8i\ms\plotting\PDF.pltcfg

PDF: ohdot\V8i
PDF: 60-06634_2E_Columbus

Model: Sheet
Printed: 1/18/2019 @ 9:50:37 AM
File: \\msconsultants.com\files\Production\03\60\06634_2E\drainage\sheets\1053220F028.dgn

View: SHEET
By: dhall

34" x 22"

CALCULATED | CHECKED

LONGITUDINAL SEWER PROFILES
RAMP N (7)

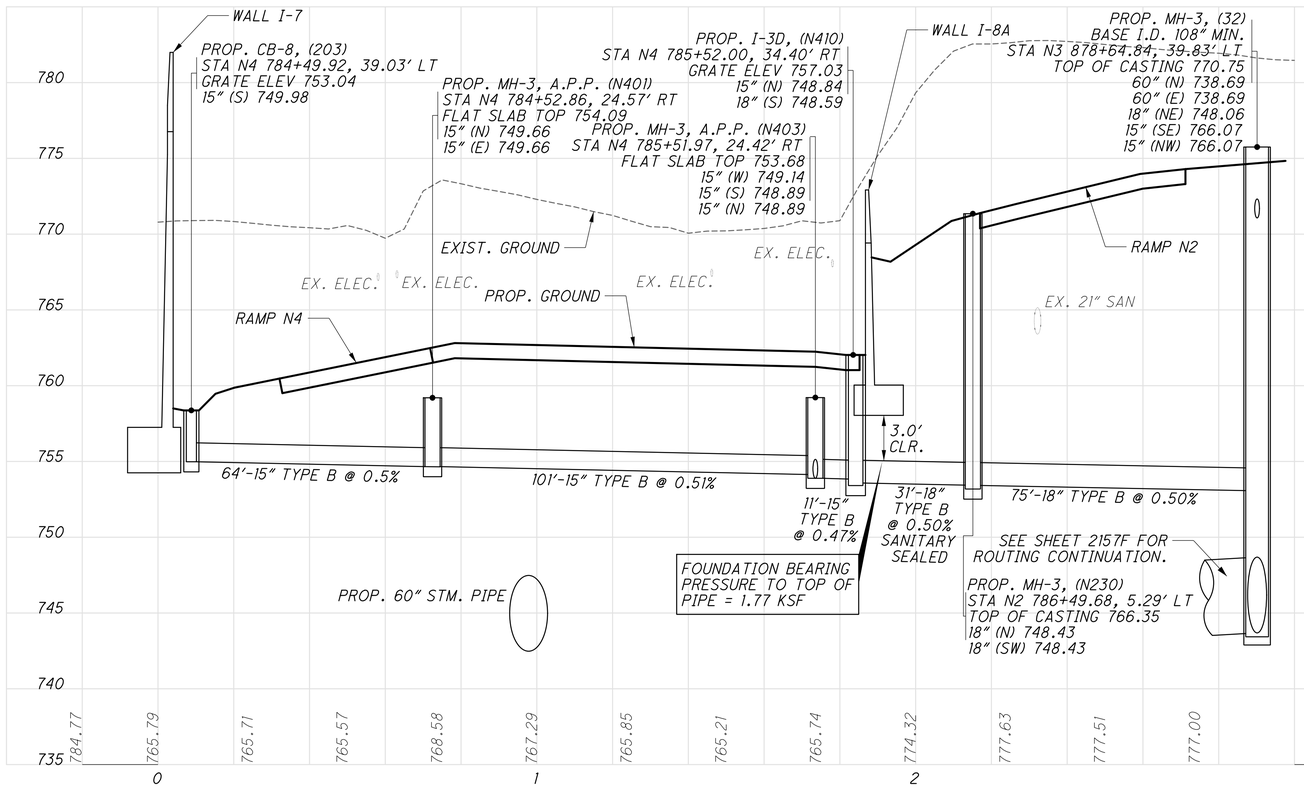

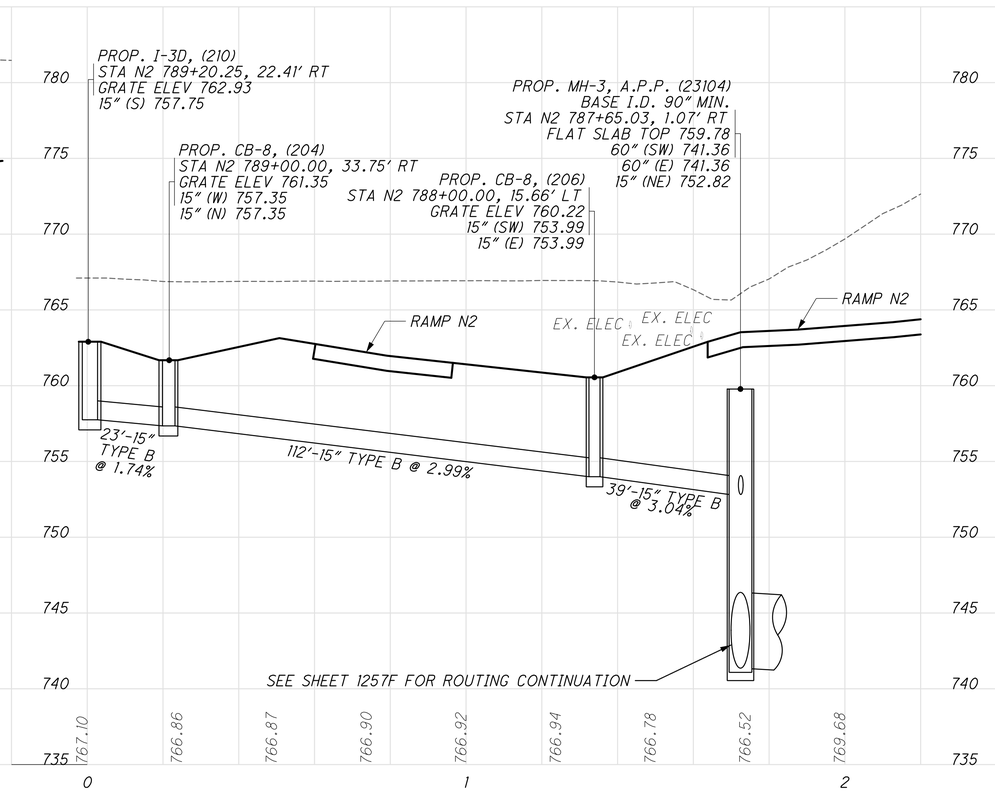

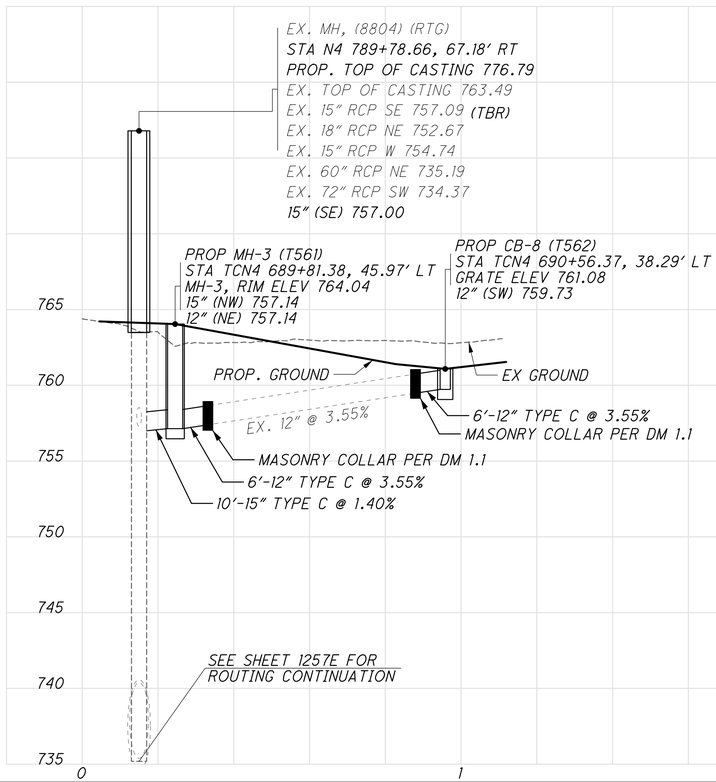

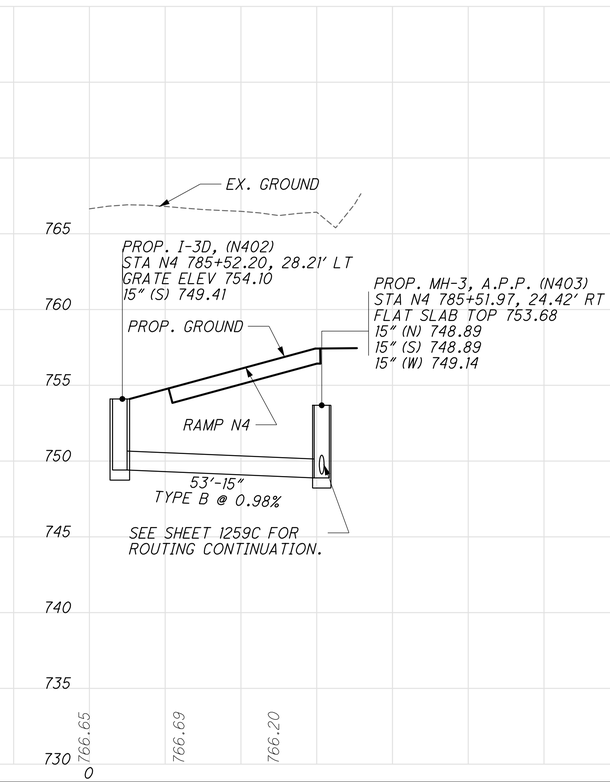

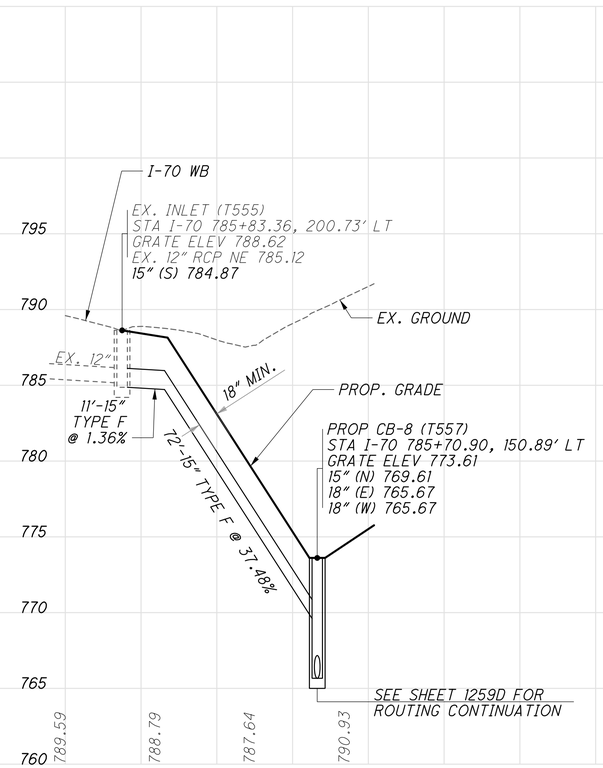

FRA-70-14.54

2590
2317

ms consultants, inc.

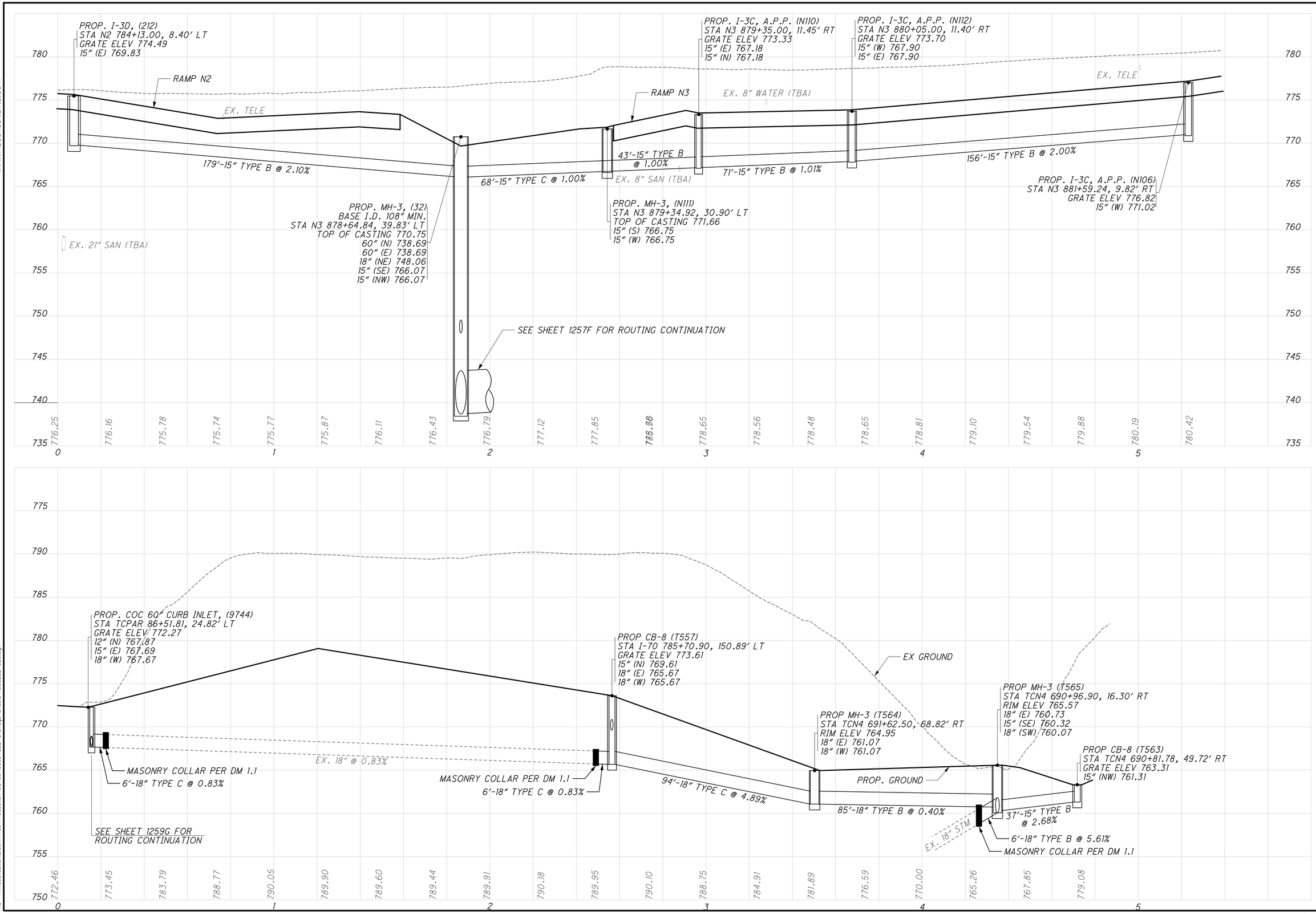

CALCULATED

CHECKED

LONGITUDINAL SEWER PROFILES
RAMP N (8)

FRA-70-14.54

1259D
2317

ms consultants, inc.

PLOT.CEL

ms consultants, inc.
msconsultants.com

Ohio DOT Workspace
70\71 East Interchange 2E
www.msconsultants.com

Batchplot Spec: \\msconsultants.com\files\production\03\60\06634_2E\standards\plotdrv\batchplt.spc
Pen Table: \\msconsultants.com\files\Standards\ustn\ohdot\V8i\ms\plotting\pen\V8i_ms_std.tbl
Plot Driver: \\msconsultants.com\files\Standards\ustn\ohdot\v8i\ms\plotting\PDF.pltcfg

34" x 22"

Model: Sheet
Printed: 1/18/2019 @ 10:10:37 AM
File: \\msconsultants.com\files\Production\03\60\06634_2E\drainage\sheets\105322DF029.dgn
View: SHEET
By: dhall

PLOT.CEL

ms consultants, inc.
msconsultants.com

www.msconsultants.com

Ohio DOT Workspace
70\71 East Interchange 2E

0 0.5" 1"

Batchplot Spec: \\msconsultants.com\files\production\03\60\06634.2E\standards\plotdrv\batchplt.SPC
Pen Table: \\msconsultants.com\files\Standards\ustn\ohdot\V8\ms\plotting\pen\V8i_ms_std.TBL
Plot Driver: \\msconsultants.com\files\Standards\ustn\ohdot\v8i\ms\plotting\PDF.pltcfg

Model: Sheet @ 10:22:39 AM View: SHEET
Printed: 1/18/2019 By: dhall
File: \\msconsultants.com\files\Production\03\60\06634.2E\drainage\sheets\1053220F014.dgn

34" x 22"

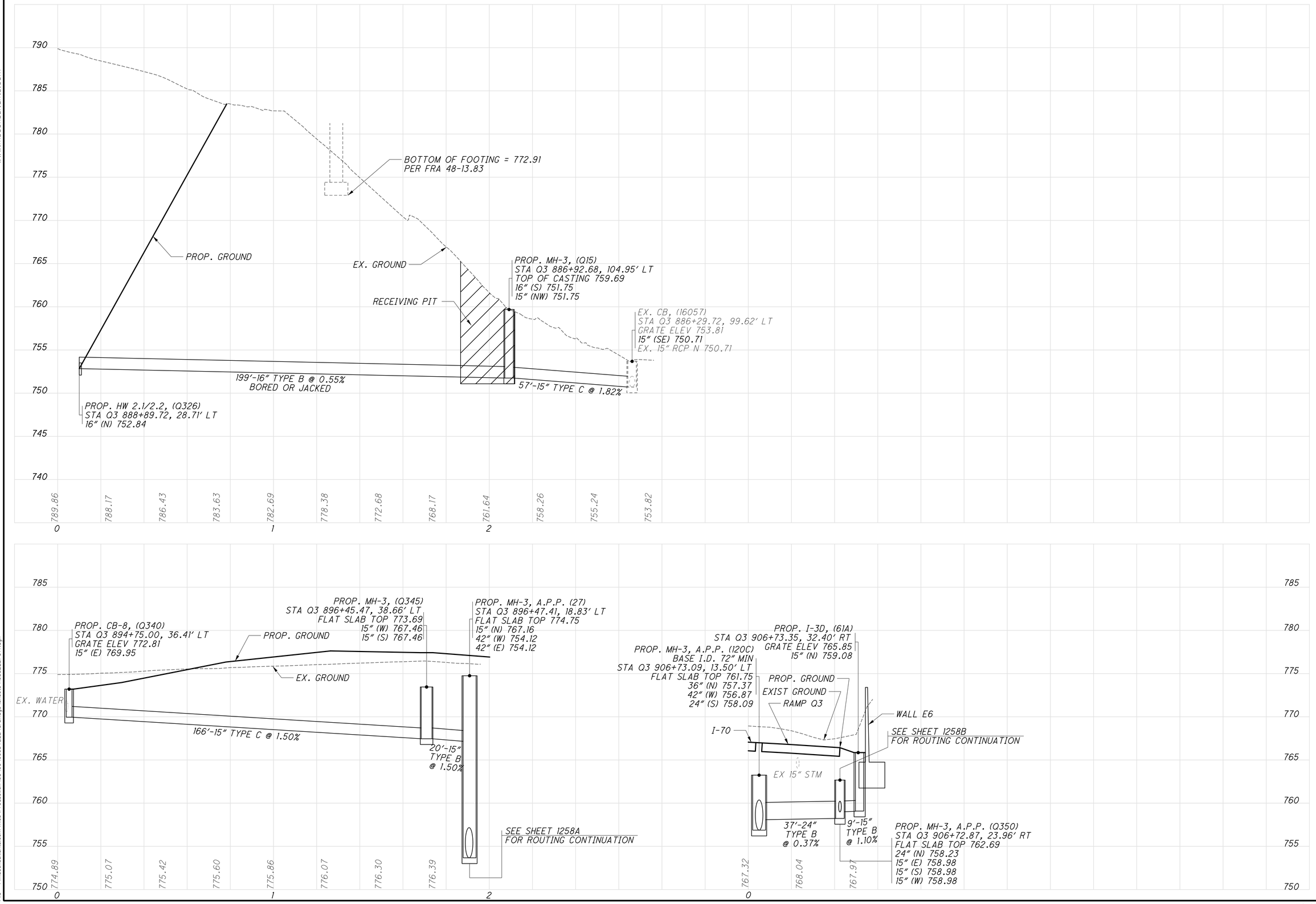

CALCULATED | CHECKED

LONGITUDINAL SEWER PROFILES
RAMP Q (1)

FRA-70-14.54

259E
2317

ms consultants, inc.

PLOT.CEL

ms consultants, inc.
msconsultants.com

Ohio DOT Workspace
70\71 East Interchange 2E

www.msconsultants.com

1"
0.5"
0

Batchplot Spec: \\msconsultants.com\files\Production\03\60\06634_2E\standards\plotdrv\batchplt.spc
Pen Table: N:\03\60\06634_2E\standards\tables\V8i_ms_std_06634_2D_Plan View_NoClouds.tbl
Plot Driver: \\msconsultants.com\files\Standards\ustn\ohdot\v8i\ms\plotting\PDF.pltcfg
PLOT: ohdot\V8i
PLOT: 60-06634_2E_Columbus

Model: Sheet
Printed: 1/17/2019 @ 2:39:49 PM View: FENCE_VIEW1
File: \\msconsultants.com\files\Production\03\60\06634_2E\drainage\sheets\1053220F035-A.dgn By: awhite

34" x 22"

CALCULATED | CHECKED

LONGITUDINAL SEWER PROFILES
RAMP Q (7)

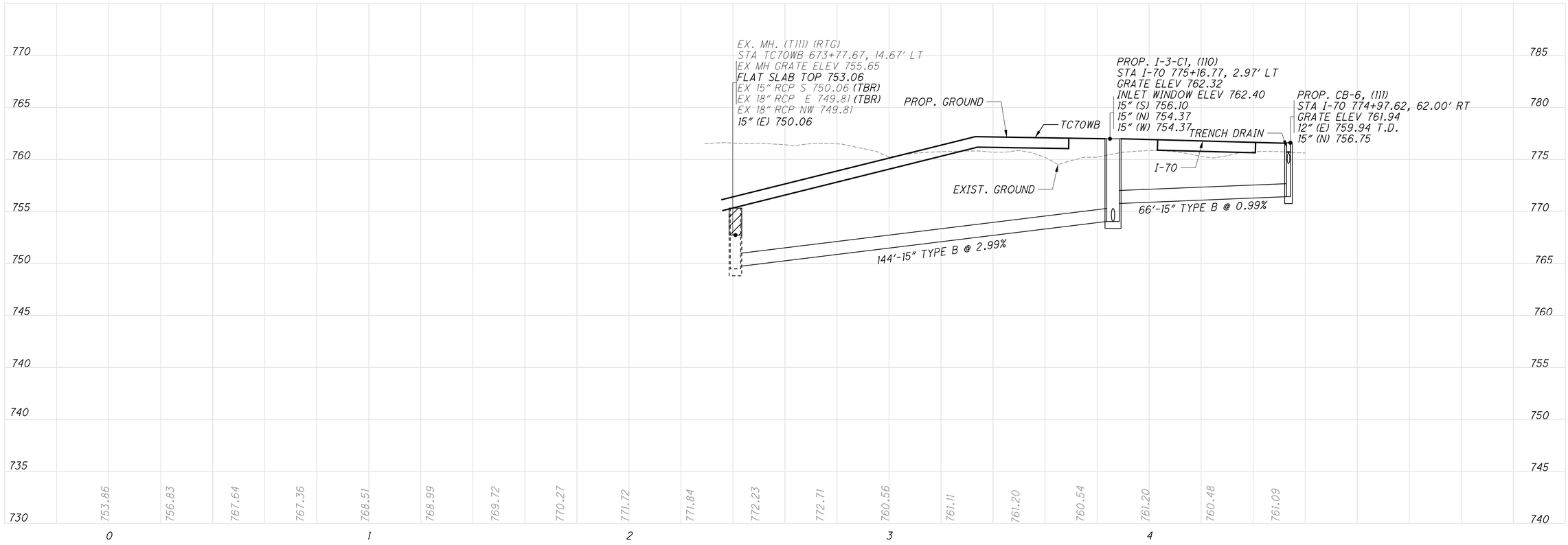

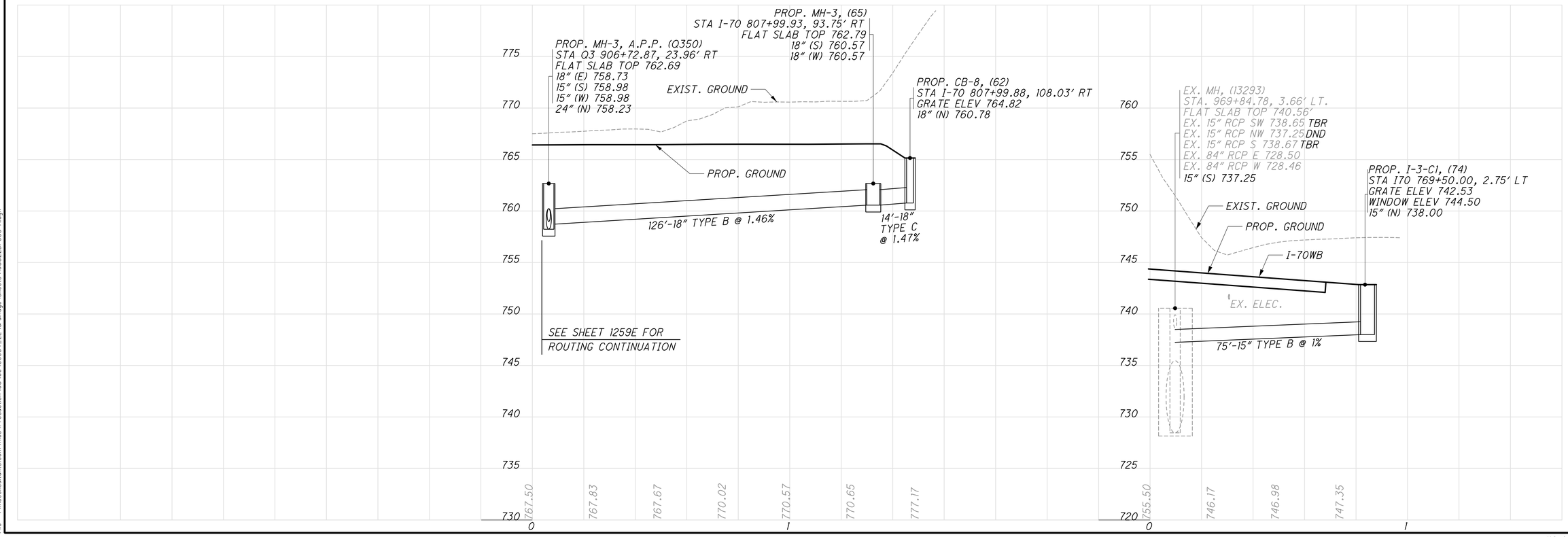

FRA-70-14.54

259F
2317

PLOT.CEL

ms consultants, inc.
msconsultants.com

www.msconsultants.com

Ohio DOT Workspace
70\71 East Interchange 2E

1" / 0.5" / 0

Batchplot Spec: \\msconsultants.com\files\Production\03\60\06634_2E\standards\plotdrv\batchplt.spc
Pen Table: N:\03\60\06634_2E\standards\tables\V8i_ms_std_06634_2D_Plan View_NoClouds.tbl
Plot Driver: \\msconsultants.com\files\Standards\ustn\ohdot\v8i\ms\plotting\PDF.pltcfg

Model: Sheet @ 3:01:23 PM
Printed: 1/17/2019
File: \\msconsultants.com\files\Production\03\60\06634_2E\drainage\sheets\1053220F036.dgn

34" x 22"

View: FENCE_VIEW1
By: awhite

CALCULATED | CHECKED

LONGITUDINAL SEWER PROFILES
PARSONS, FULTON AVENUE

FRA-70-14.54

2590
2317

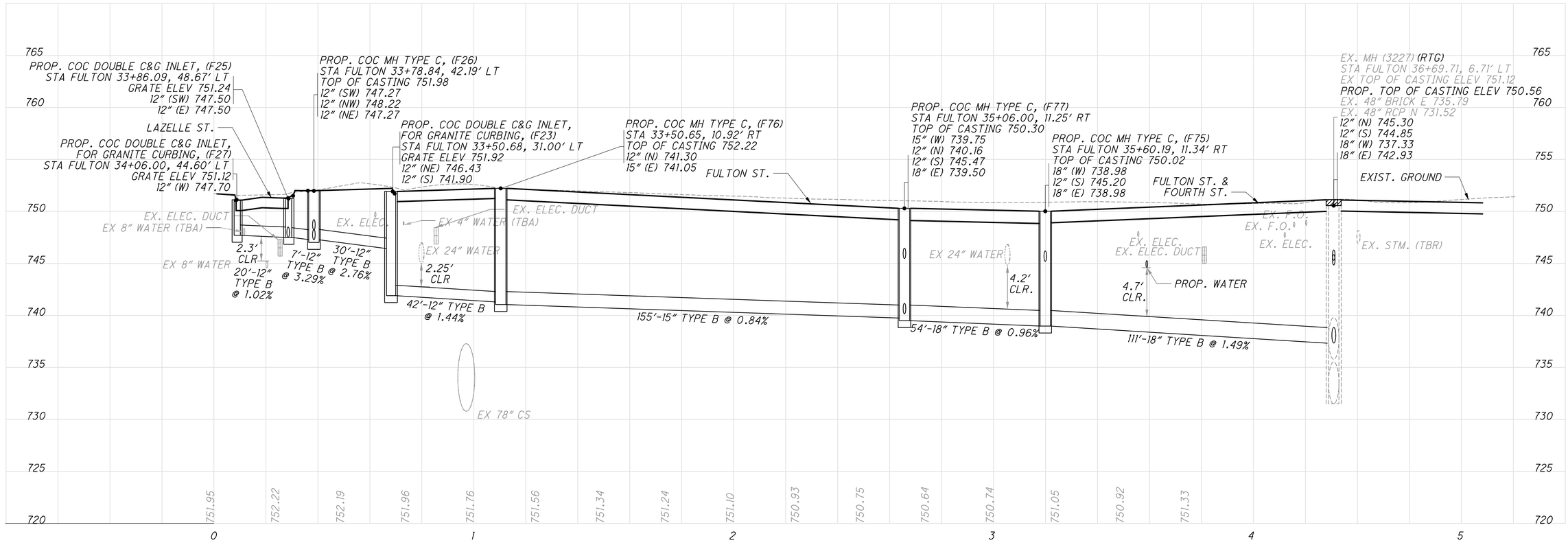

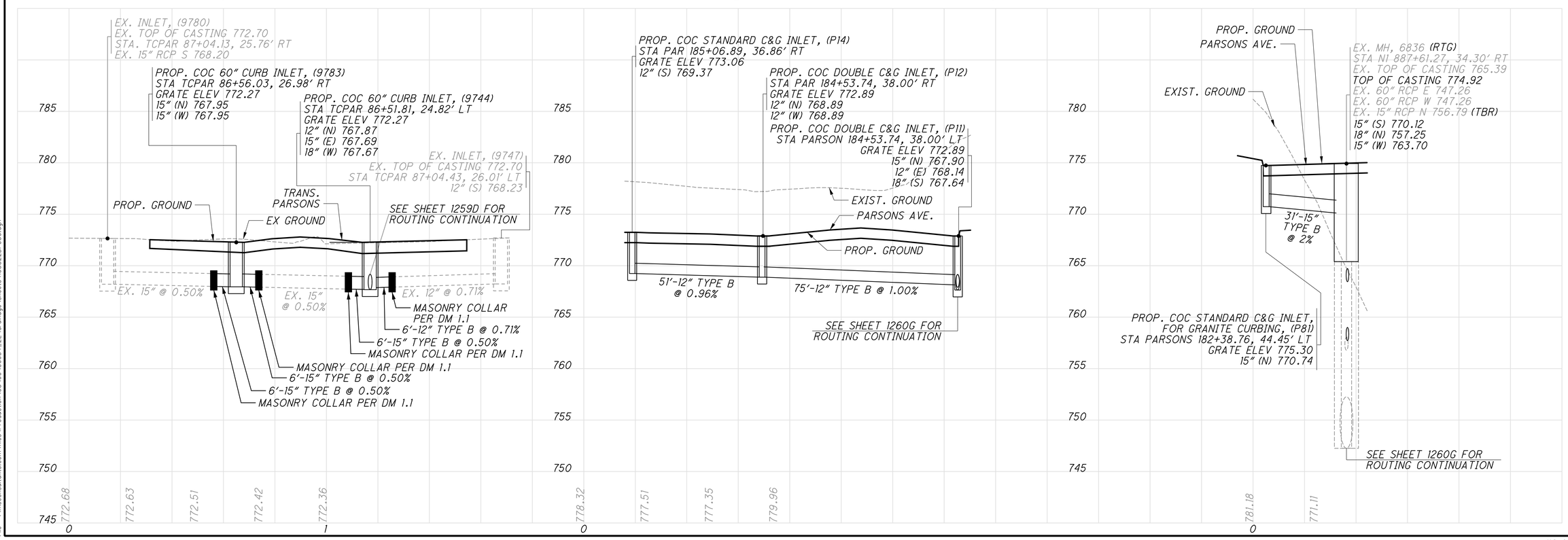

PLOT.CEL

ms consultants, inc.
msconsultants.com

www.msconsultants.com
Ohio DOT Workspace
70\71 East Interchange 2E

1"
0.5"
0

Batchplot Spec: \\msconsultants.com\Files\Production\03\60\06634.2E\standards\plotdrv\batchplt.SPC
Pen Table: \\msconsultants.com\Files\Standards\astm\ohdot\V8i\ms\plotting\pen\V8i_ms_std.tbl
Plot Driver: \\msconsultants.com\Files\Standards\astm\ohdot\v8i\ms\plotting\PDF.pltcfg

Model: Sheet
Printed: 1/18/2019 @ 10:53:43 AM
File: \\msconsultants.com\Files\Production\03\60\06634.2E\drainage\sheets\1053220F037.dgn

34" x 22"

View SHEET
By: dhall

PDF: ohdot\V8i
PDF: 60-06634_2E_Columbus

CALCULATED | CHECKED

LONGITUDINAL SEWER PROFILES
FULTON AVE. (1)

FRA-70-14.54

1260
2317

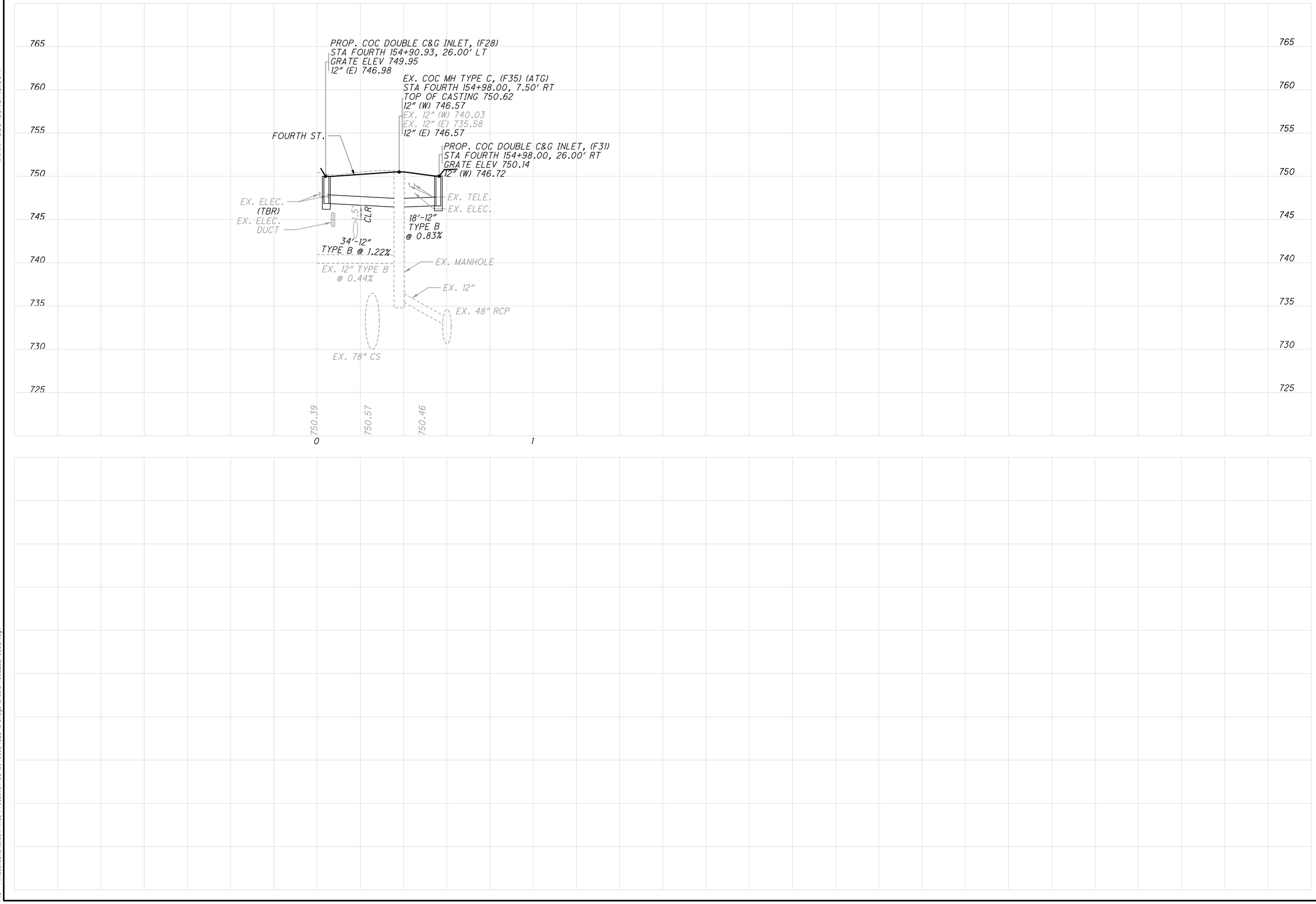

LONGITUDINAL SEWER PROFILES
FOURTH ST.

CALCULATED

CHECKED

FRA-70-14.54

1260A
2317

PLOT.CEL

ms consultants, inc.
msconsultants.com

Ohio DOT Workspace
70\71 East Interchange 2E
www.msconsultants.com

Batchplot Spec: \\msconsultants.com\files\production\03\60\06634_2E\standards\plotdrv\batchplt.spc
Pen Table: \\msconsultants.com\files\Production\03\60\06634_2E\standards\tables\V8i_ms_std_06634_2E_Plan View.tbl
Plot Driver: \\msconsultants.com\files\Standards\ustn\ohdot\v8i\ms\plotting\PDF.pltcfg

34" x 22"

Model: Sheet
Printed: 1/11/2019 @ 2:14:14 PM
File: \\msconsultants.com\files\Production\03\60\06634_2E\drainage\sheets\105322DF039_A.dgn
View: SHEET
By: dhall

ms consultants, inc.

PLOT.CEL

ms consultants, inc.
msconsultants.com

www.msconsultants.com
Ohio DOT Workspace
70\71 East Interchange 2E

1" 0.5" 0

PDF: ohdot\V8i
PCF: 60-06634_2E_Columbus

Batchplot Spec: \\msconsultants.com\files\production\03\60\06634_2E\standards\plotdr\batchplt.spc
Pen Table: N:\03\60\06634_2E\standards\tables\V8i_ms_std_06634_2D_Plan View.tbl
Plot Driver: \\msconsultants.com\files\Standards\ustn\ohdot\v8i\ms\plotting\PDF.pltcfg

Model: Sheet
Printed: 6/19/2018 @ 9:20:28 AM
File: N:\03\60\06634_2E\drainage\sheets\053220F030.dgn

34" x 22"

View: FENCE_VIEW1
By: jbougis

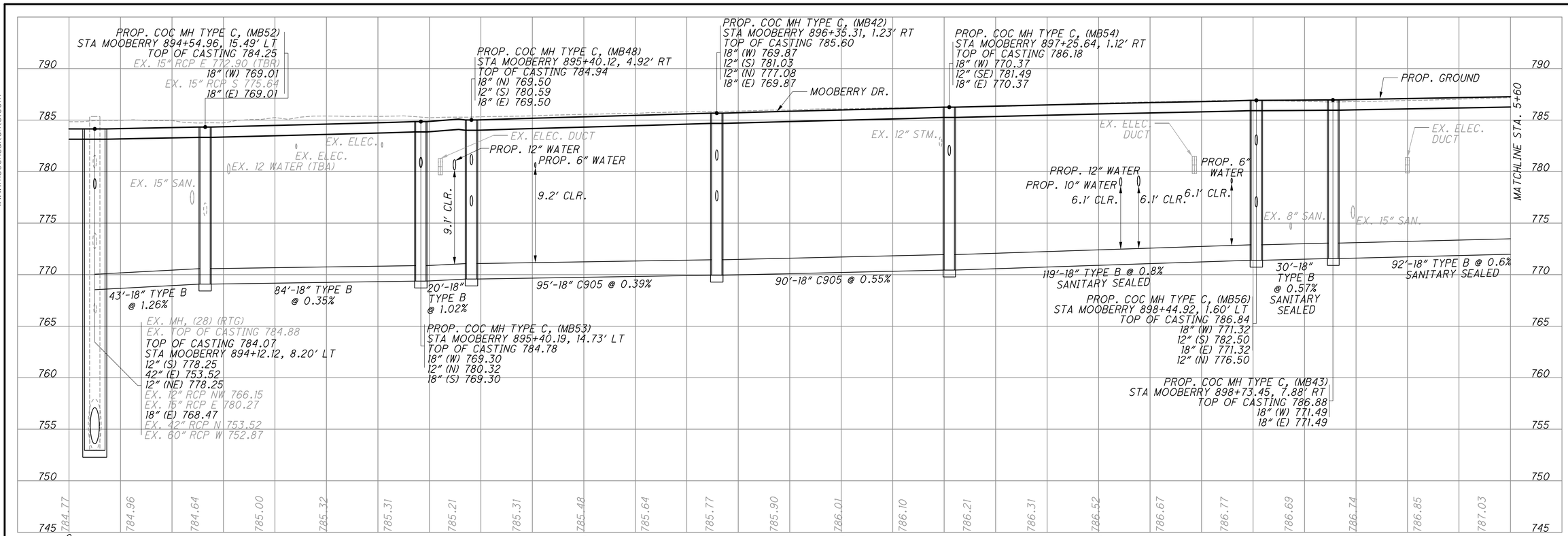

CALCULATED | CHECKED

LONGITUDINAL SEWER PROFILES
MOOBERRY STREET MAIN TRUNK(1)

FRA-70-14.54

1260B
2317

ms consultants, inc.

PLOT.CEL

ms consultants, inc.
msconsultants.com

Ohio DOT Workspace
70\71 East Interchange 2E

www.msconsultants.com

1"
0.5"
0

PDF: ohdot\V8i
PDF: 60-06634_2E_Columbus

Batchplot Spec: \\msconsultants.com\files\production\03\60\06634.2E\standards\ohdot\v8i\batchplt.SPC
Pen Table: \\msconsultants.com\files\Standards\astm\ohdot\V8i\ms\plotting\pen\V8i_ms_std.tbl
Plot Driver: \\msconsultants.com\files\Standards\astm\ohdot\v8i\ms\plotting\PDF.pltcfg

34" x 22"

View: SHEET
By: dhall

Model: Sheet @ 2:21:04 PM
Printed: 2/21/2018
File: \\msconsultants.com\files\Production\03\60\06634.2E\drainage\sheets\105220F031.dgn

CALCULATED

CHECKED

LONGITUDINAL SEWER PROFILES
MOOBERRY STREET (2)

FRA-70-14.54

2600
2317

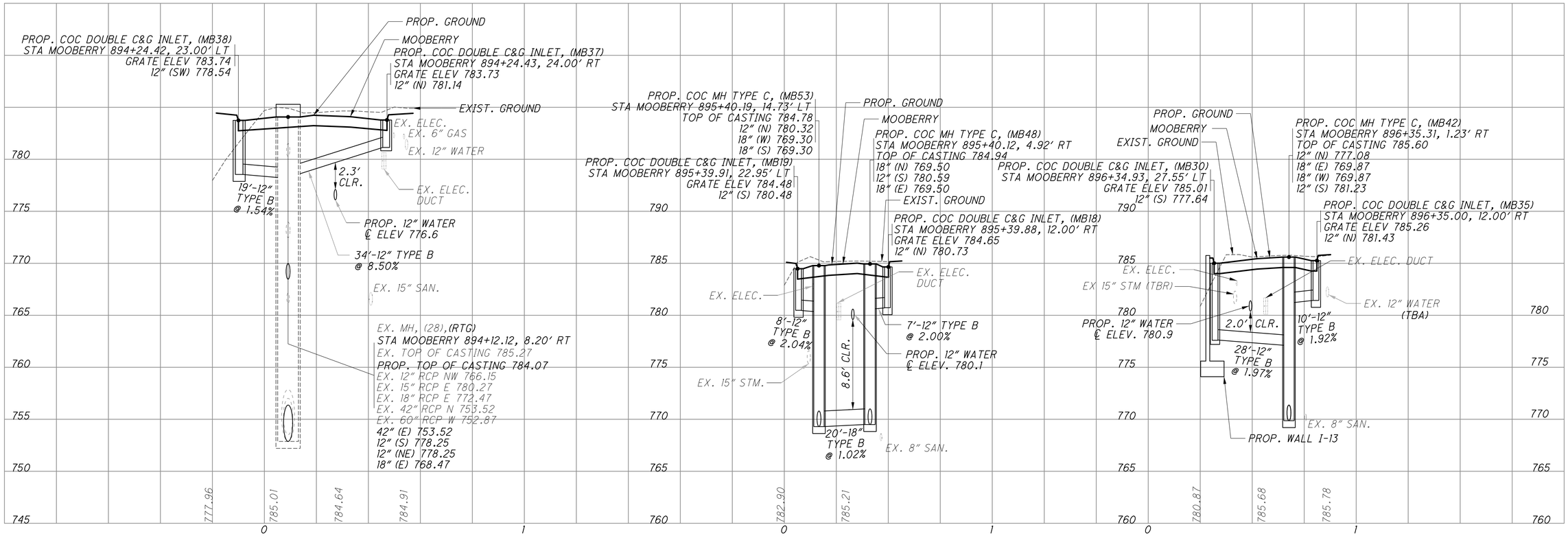

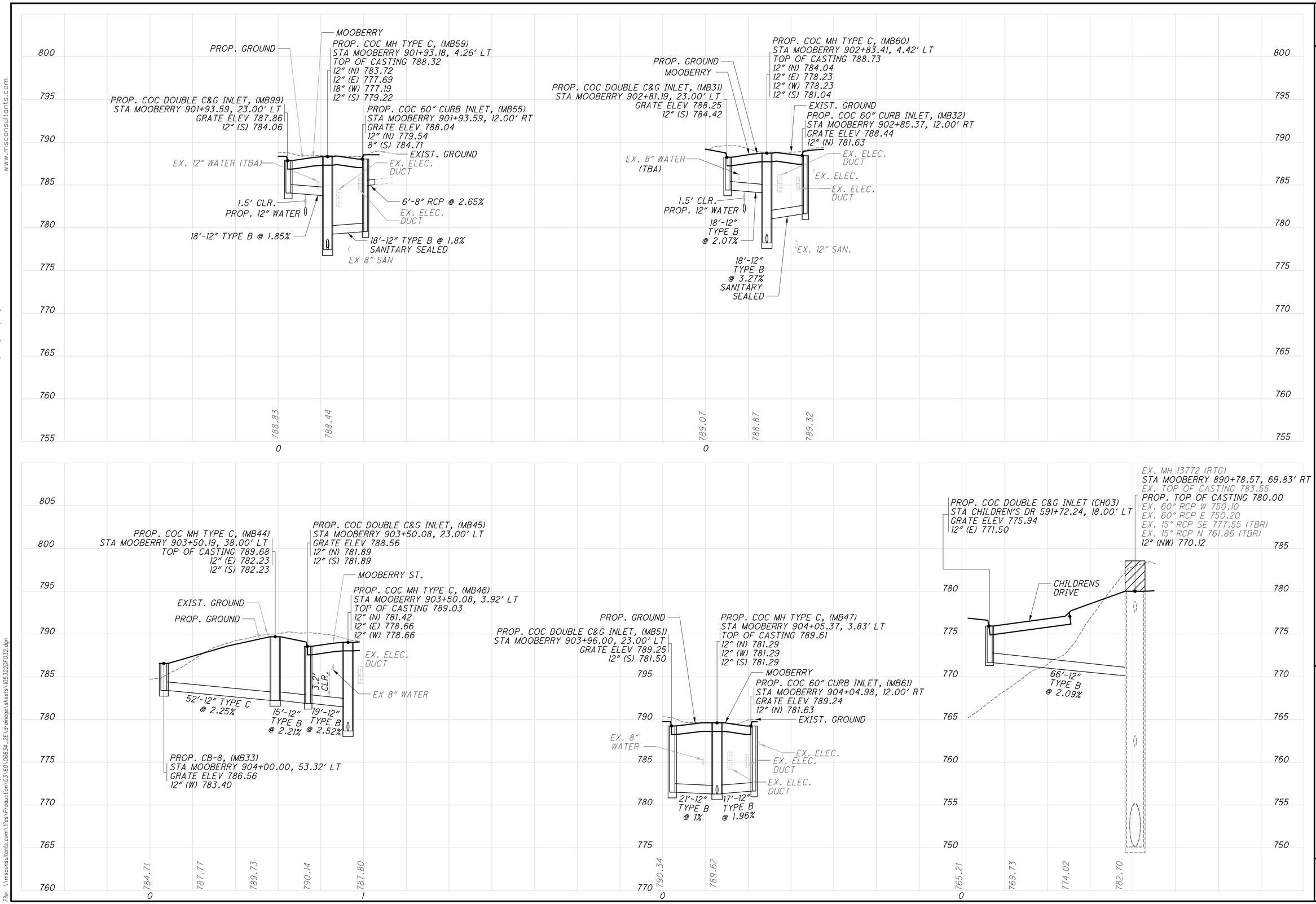

PLOT.CEL

ms consultants, inc.
msconsultants.com

Ohio DOT Workspace
70\71 East Interchange 2E
www.msconsultants.com

Batchplot Spec: \\msconsultants.com\files\production\03\60\06634_2E\standards\plotdrv\batchplt.spc
Pen Table: \\msconsultants.com\files\Standards\ustn\ohdot\V8i\ms\plotting\pen\V8i_ms_std.tbl
Plot Driver: \\msconsultants.com\files\Standards\ustn\ohdot\v8i\ms\plotting\PDF.pltcfg

34" x 22"

Model: Sheet
Printed: 1/18/2019 @ 11:13:40 AM
File: \\msconsultants.com\files\Production\03\60\06634_2E\drainage\sheets\105322DF032.dgn
View: SHEET
By: dhall

CALCULATED
CHECKED

LONGITUDINAL SEWER PROFILES
MOOBERRY STREET (3)

FRA-70-14.54

1260D
2317

ms consultants, inc.

PLOT.CEL

ms consultants, inc.
msconsultants.com

Ohio DOT Workspace
70\71 East Interchange 2E
www.msconsultants.com

1"
0.5"
0

PDF: ohdot\V8i
PDF: 60-06634_2E_Columbus

Batchplot Spec: \\msconsultants.com\files\production\03\60\06634_2E\standards\plotdrv\batchplt.SPC
Pen Table: \\msconsultants.com\files\Standards\astm\ohdot\V8\ms\plotting\pen\V8i_ms_std.tbl
Plot Driver: \\msconsultants.com\files\Standards\astm\ohdot\v8i\ms\plotting\PDF.pltcfg

Model: Sheet
Printed: 1/18/2019 @ 11:29:54 AM
File: \\msconsultants.com\files\Production\03\60\06634_2E\drainage\sheets\1053220F041.dgn

34" x 22"

View SHEET
By: dhall

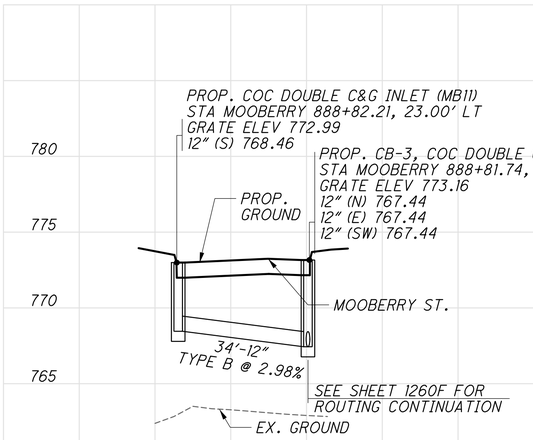

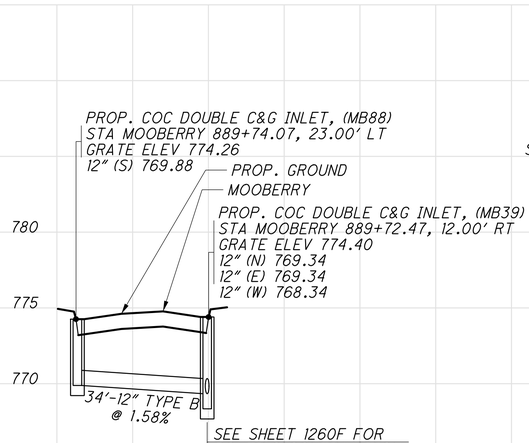

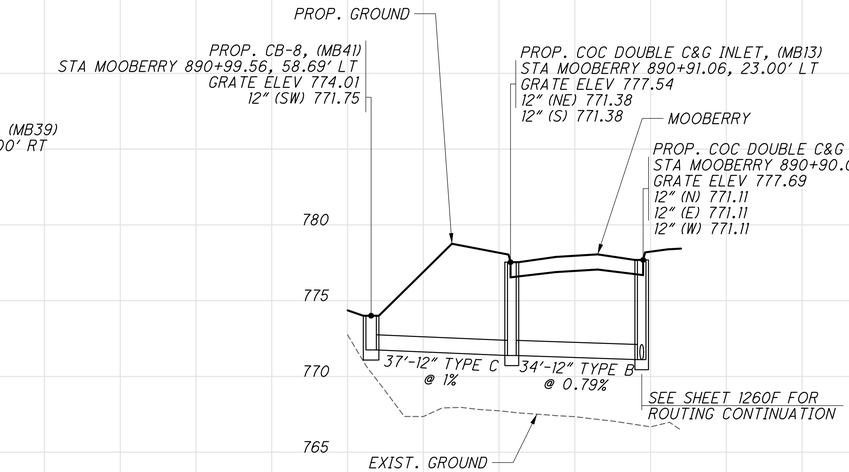

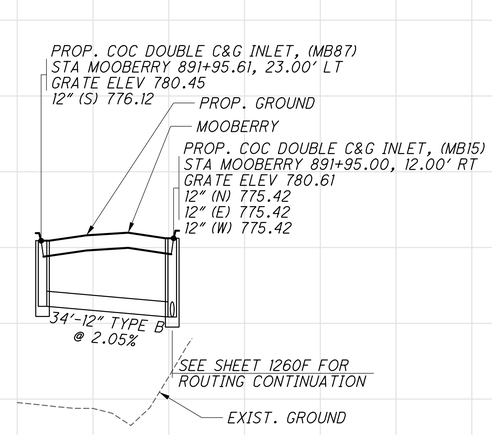

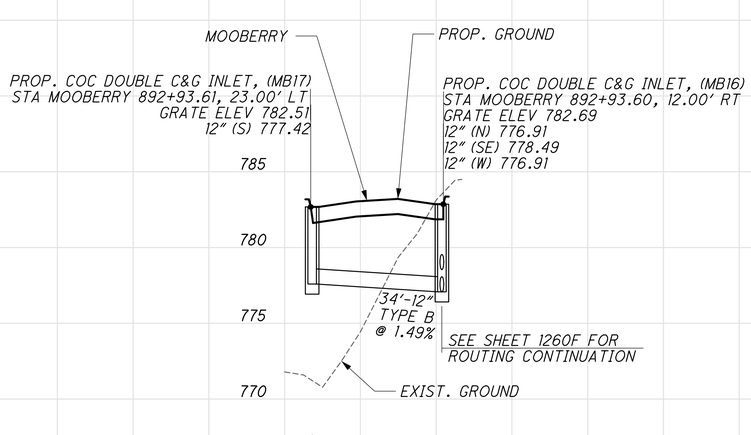

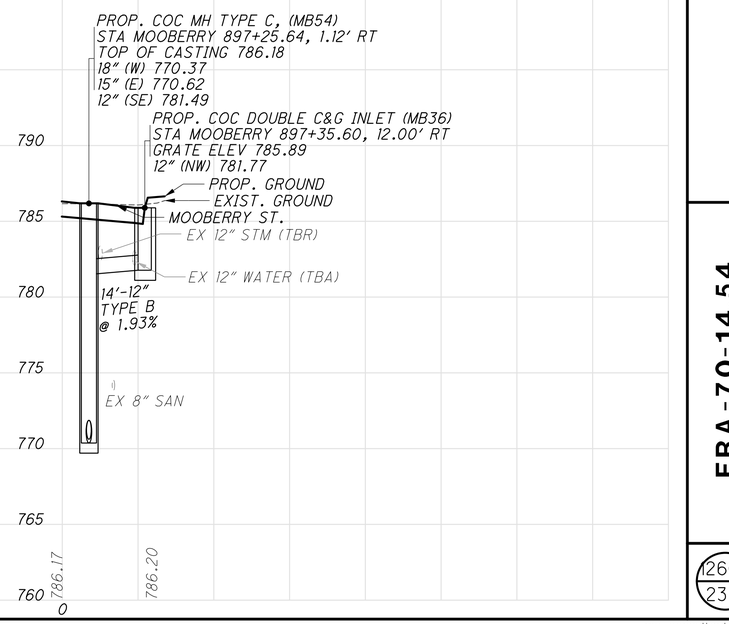

CALCULATED | CHECKED

LONGITUDINAL SEWER PROFILES
MOOBERRY ST.

FRA-70-14.54

1260F
2317

PLOT.CEL

ms consultants, inc.
msconsultants.com

Ohio DOT Workspace
70\71 East Interchange 2E
www.msconsultants.com

0 0.5" 1"

Batchplot Spec: \\msconsultants.com\files\production\03\60\06634.2E\standards\olotdr\batchplt.SPC
Pen Table: \\msconsultants.com\files\Standards\astm\ohdot\V8i\ms\plotting\pen\V8i_ms_std.TBL PDF: ohdot\V8i
Plot Driver: \\msconsultants.com\files\Standards\astm\ohdot\v8i\ms\plotting\PDF.pltcfg PDF: 60-06634_2E_Columbus

Model: Sheet View: SHEET
Printed: 1/18/2019 @ 11:43:43 AM By: dhall
File: \\msconsultants.com\files\Production\03\60\06634.2E\drainage\sheets\1053220F040.dgn

34" x 22"

CALCULATED | CHECKED

LONGITUDINAL SEWER PROFILES
MOOBERRY,PARSONS - (SOUTH)

FRA-70-14.54

260P
2317

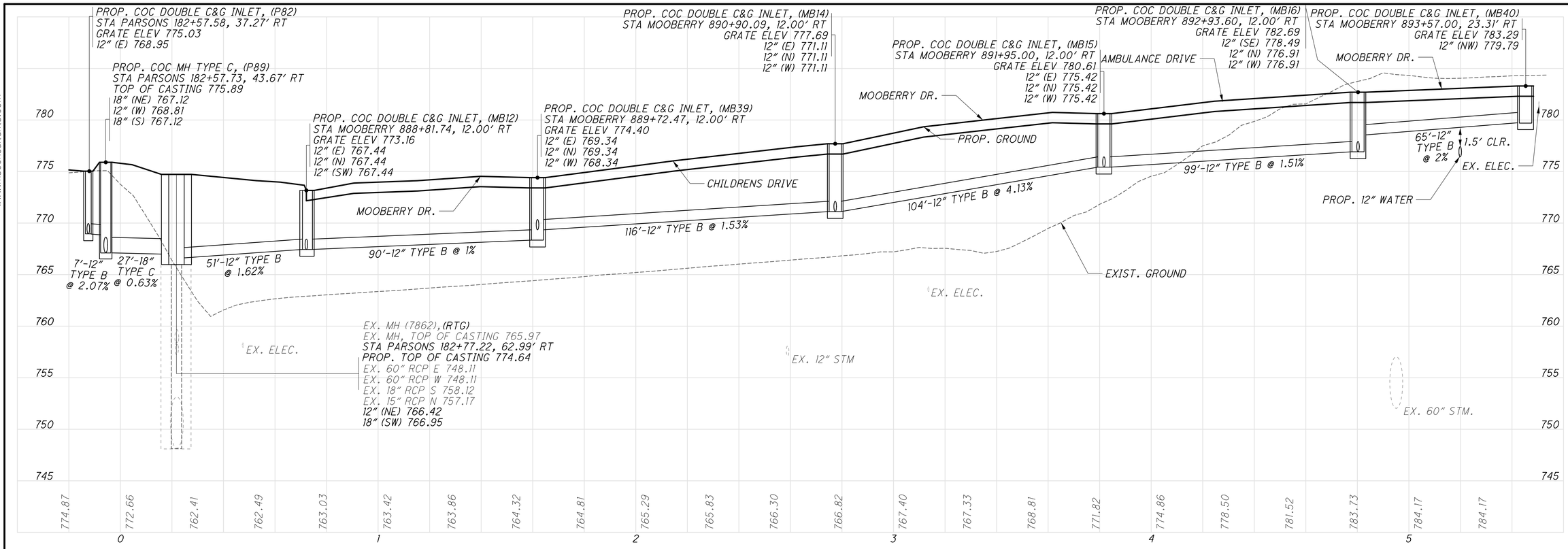

PLOT.CEL

ms consultants, inc.
msconsultants.com

www.msconsultants.com

Ohio DOT Workspace
70\71 East Interchange 2E

0 0.5" 1"

PDF: ohdot\V8i
PDF: 60-06634_2E_Columbus

Batchplot Spec: \\msconsultants.com\files\Production\03\60\06634_2E\standards\plotdrv\batchplt.SPC
Pen Table: \\msconsultants.com\files\Standards\astm\ohdot\V8\ms\plotting\pen\V8i_ms_std.TBL
Plot Driver: \\msconsultants.com\files\Standards\astm\ohdot\v8i\ms\plotting\PDF.pltdrg

34" x 22"

Model: Sheet
Printed: 1/18/2019 @ 12:26:36 PM
File: \\msconsultants.com\files\Production\03\60\06634_2E\drainage\sheets\1053220F042_A.dgn
View: SHEET
By: dhall

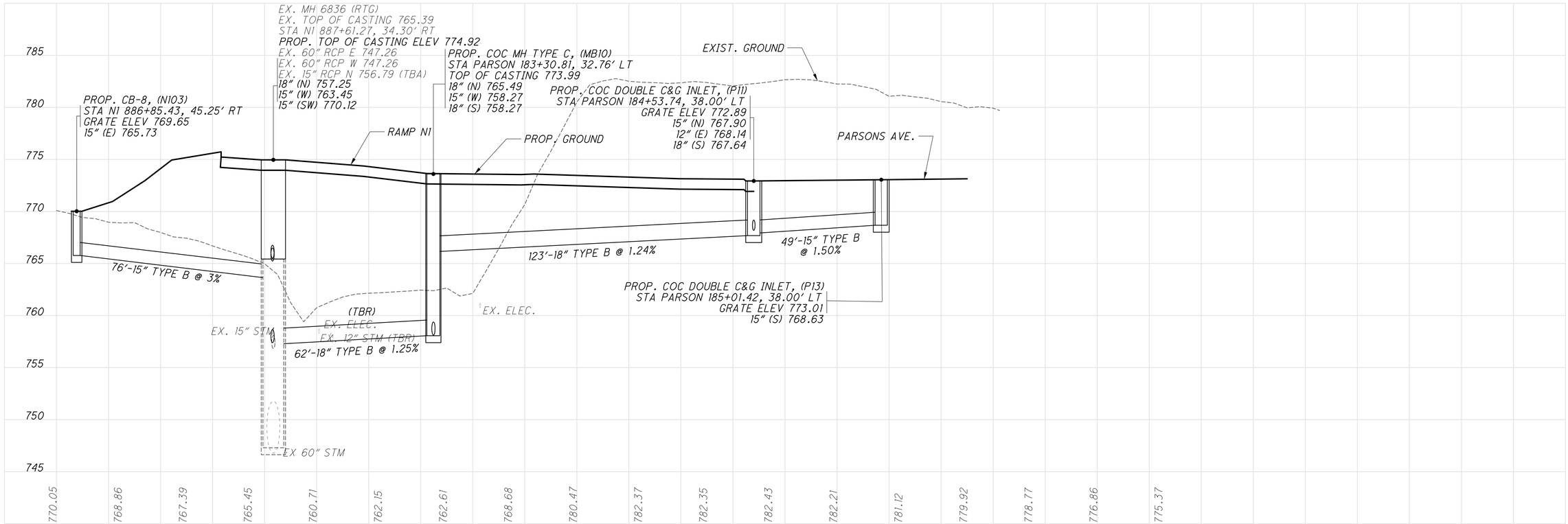

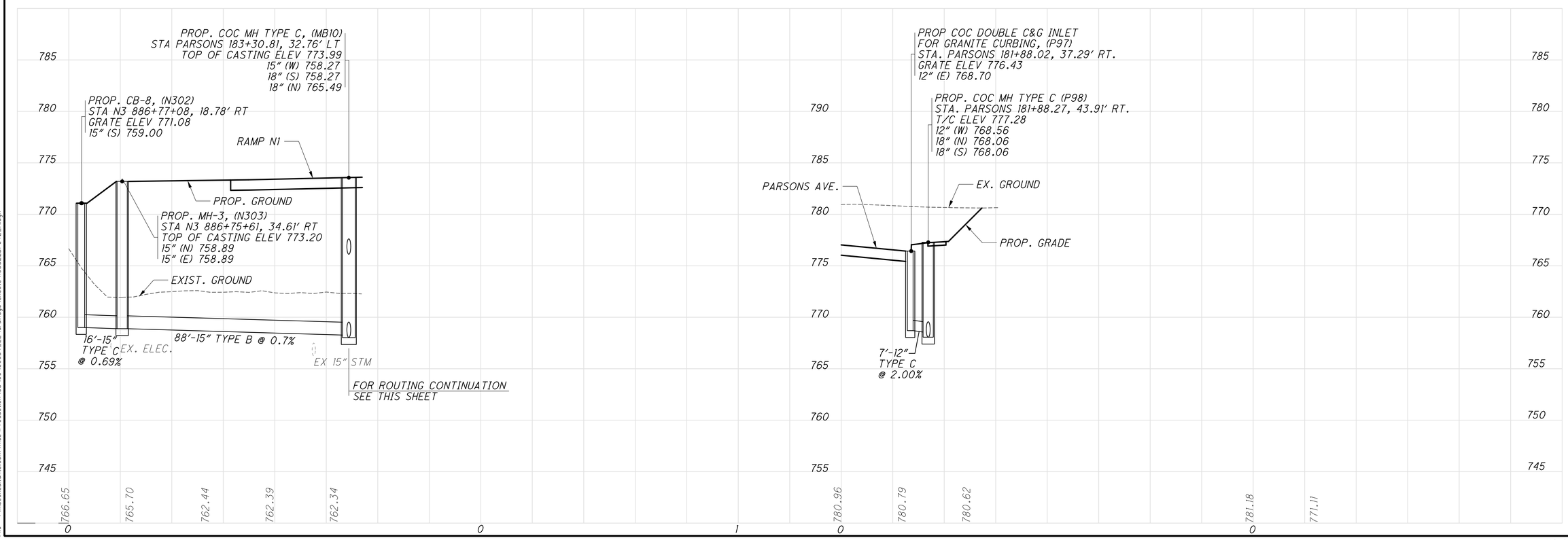

CALCULATED | CHECKED

LONGITUDINAL SEWER PROFILES
PARSONS & RAMP N

FRA-70-14.54

2600
2317

ms consultants, inc.

PLOT.CEL
ms consultants, inc.
msconsultants.com
www.msconsultants.com
Ohio DOT Workspace
70\71 East Interchange 2E
DGN: ohdot\V8i
PCF: 60-06634_2E_Columbus
Batchplot Spec: \\msconsultants.com\files\production\03\60\06634_2E\standards\plotdrv\batchplt.spc
Pen Table: N:\03\60\06634_2E\standards\tables\V8i_ms_std_NoClouds.tbl
Plot Driver: \\msconsultants.com\files\Standards\ustn\ohdot\v8i\ms\plotting\PDF.pltdrv
Model: Sheet @ 3:50:05 PM View: FENCE_VIEW1
Printed: 2/15/2019 By: amcdaniel
File: \\msconsultants.com\files\Production\03\60\06634_2E\drainage\sheets\10532200005.dgn
34" x 22"

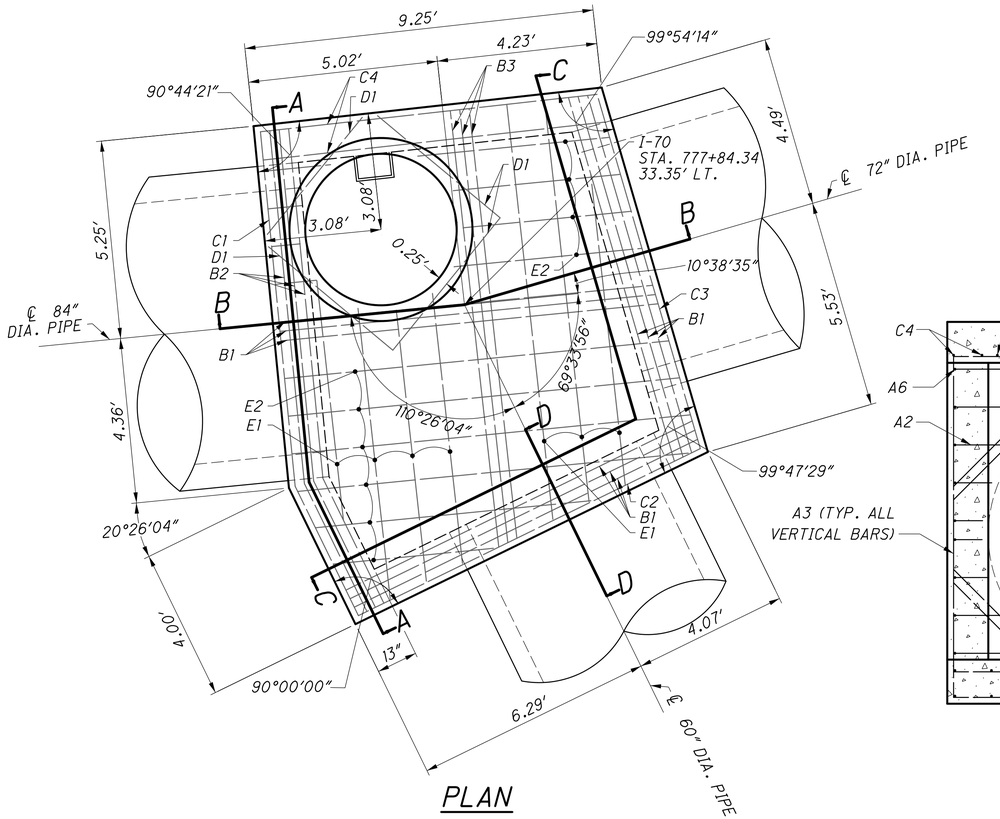

PLAN

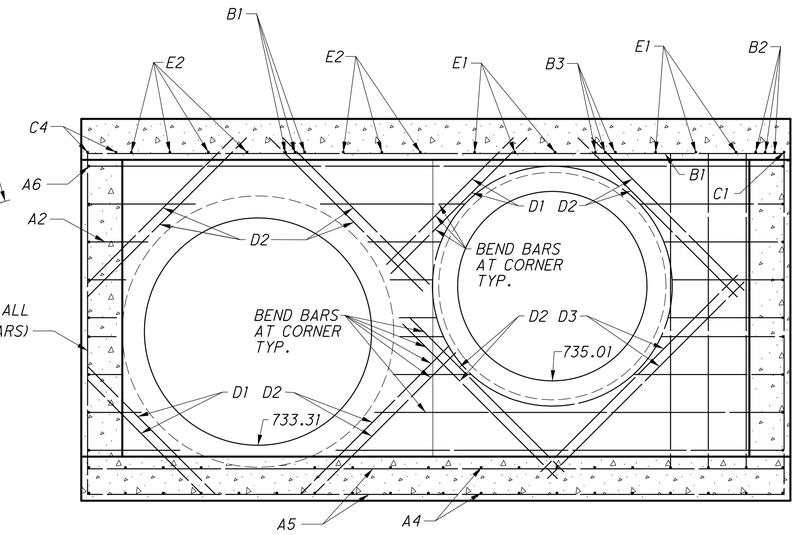

SECTION C-C

JUNCTION CHAMBER REINFORCING								
BAR MARK	No.	SIZE	TYPE	LENGTH	SERIES INC.	DIMENSIONS A	DIMENSIONS B	WEIGHT
A1	11	7	STR	13'-3"		-	-	298
A2	11	7	STR	18'-4"		-	-	413
A3	22	7	STR	9'-0"		-	-	405
	1			8'-1"		-	-	
A4	SER OF	7	STR	TO	3"	-	-	464
	12			10'-10"		-	-	
	1			10'-5"		-	-	
A5	SER OF	7	STR	TO	4"	-	-	488
	10			13'-5"		-	-	
A6	9	7	STR	8'-11"		-	-	165
B1	9	7	STR	10'-2"		-	-	188
B2	3	7	STR	13'-0"		-	-	80
B3	3	7	STR	11'-6"		-	-	71
C1	1	7	STR	13'-3"		-	-	28
C2	1	7	STR	10'-1"		-	-	21
C3	1	7	STR	9'-9"		-	-	20
C4	2	7	STR	9'-1"		-	-	38
D1	12	5	STR	4'-6"		-	-	57
D2	10	5	STR	6'-0"		-	-	63
D3	6	5	STR	7'-4"		-	-	46
	1			10'-4"		-	-	
E1	SER OF	5	STR	TO	5"	-	-	99
	8			13'-3"		-	-	
	1			8'-6"		-	-	
E2	SER OF	5	STR	TO	3"	-	-	108
	9			10'-9"		-	-	
					TOTAL			3052

BARS MAY BE FIELD CUT AND FIELD BENT AS REQUIRED

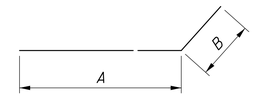

TYPE 19

INFORMATION INCLUDED FOR ESTIMATING PURPOSES ONLY
VOLUME OF CONCRETE = 23 CY

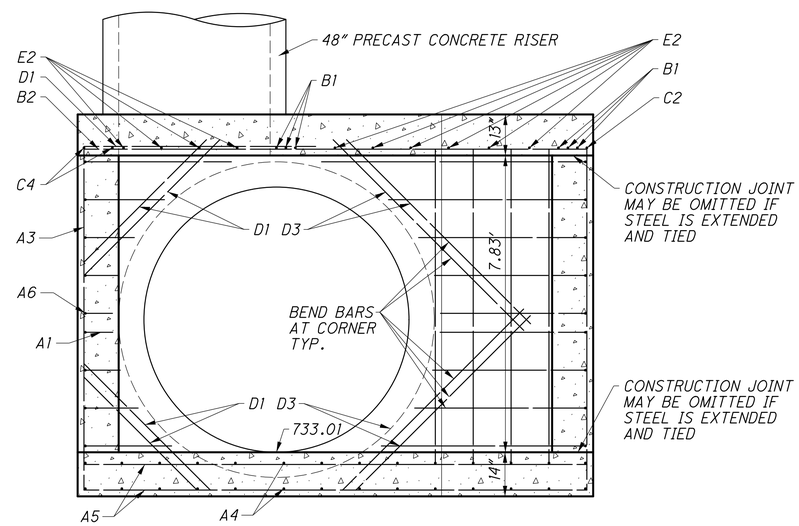

SECTION A-A

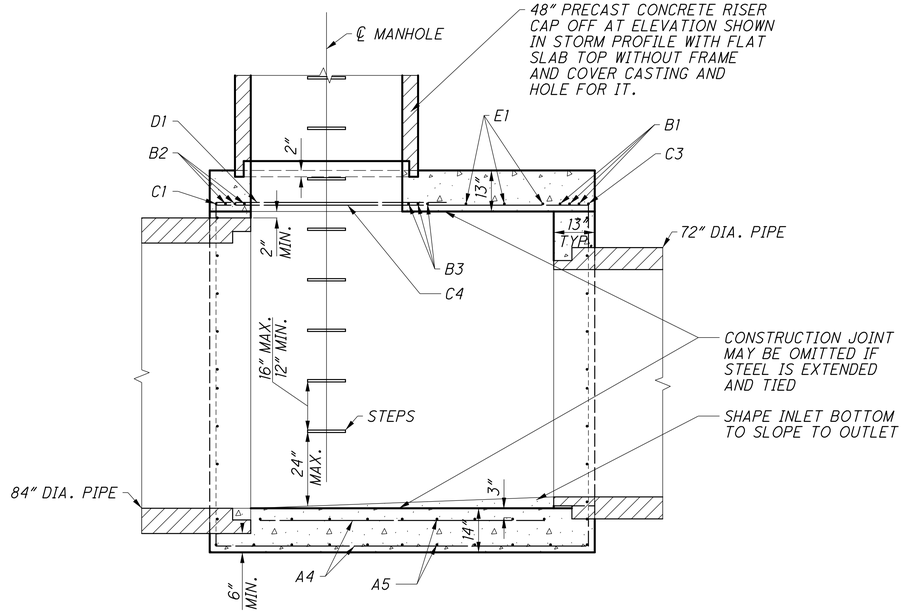

SECTION B-B

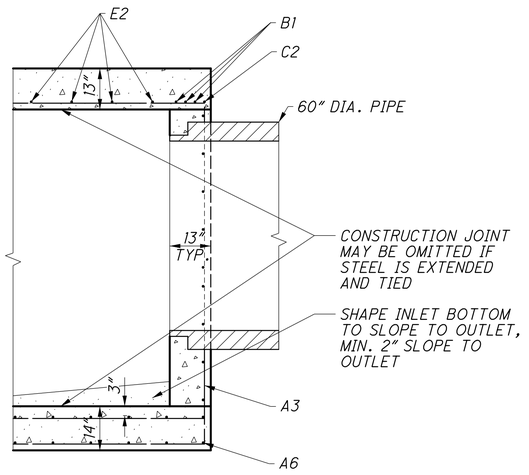

SECTION D-D

NOTES

1) REFER TO ODOT SCD MH-1.3 FOR NOTES AND REINFORCING STEEL LIST FOR BAR SIZE AND SPACING FOR 84" CONDUIT NOT SHOWN ON THIS SHEET
2) THE BASE OF THIS MANHOLE SHALL BE CAST-IN-PLACE, AS PER SCD MH-1.3.

CALCULATED

CHECKED

JUNCTION CHAMBER, AS PER PLAN

FRA-70-14.54

260H
2317

ms consultants, inc.

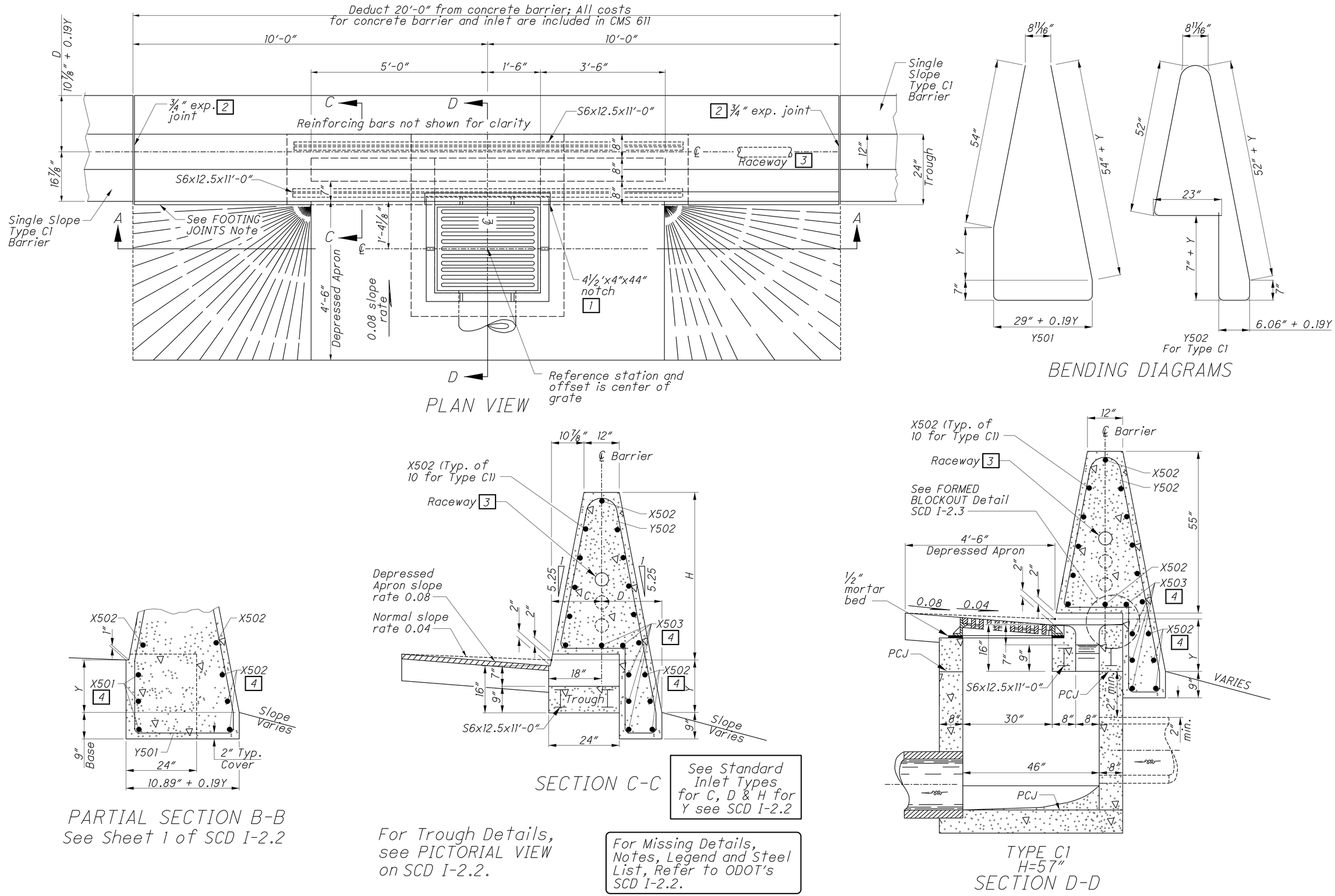

CALCULATED
CHECKED

INLET NO. 3 FOR SINGLE SLOPE BARRIER, TYPE C1, A.P.P. "B"

FRA-70-14.54

12601
2317

ms consultants, inc.

PLOT.CEL

ms consultants, inc.
msconsultants.com

Ohio DOT Workspace
70\71 East Interchange 2E
www.msconsultants.com

Batchplot Spec: \\msconsultants.com\files\production\03\60\06634_2E\standards\plotdrv\batchplt.spc
Pen Table: N:\03\60\06634_2E\standards\tables\V8i_ms_std_06634_2D_Plan View.tbl
Plot Driver: \\msconsultants.com\files\Standards\ustn\ohdot\v8i\ms\plotting\PDF.pltcfg

34" x 22"

Model: Sheet
Printed: 6/19/2018 @ 9:21:00 AM
File: N:\03\60\06634_2E\drainage\sheets\77370D0001.dgn
View: FENCE_VIEW1
By: jdouglas

PLOT.CEL
ms consultants, inc.
msconsultants.com
www.msconsultants.com
Ohio DOT Workspace
70\71 East Interchange 2E
PCF: 60-06634_2E_Columbus
DF: ohdot\V8i
Batchplot Spec: \\msconsultants.com\files\production\03\60\06634_2E\standards\plotdrv\batchplt.spc
Pen Table: N:\03\60\06634_2E\standards\tables\V8i_ms_std_06634_2D_Plan View.tbl
Plot Driver: \\msconsultants.com\files\Standards\ustn\ohdot\v8i\ms\plotting\PDF.pltcfg
Model: Sheet View: FENCE_VIEW1
Printed: 6/19/2018 @ 9:21:02 AM By: jdouglas
File: N:\03\60\06634_2E\drainage\sheets\737000001A.dgn
34" x 22"

Deduct 20'-0" from concrete barrier; All costs for concrete barrier and inlet are included in CMS 611

10'-0" 10'-0"

5'-0" 1'-6" 3'-6"

C D

C = 8" + 0.19Y

¾" exp. joint 2

Reinforcing bars not shown for clarity

S6x12.5x11'-0"

2 ¾" exp. joint

Single Slope Type C Barrier

℄ Raceway 3

12"

28" Trough

14"

S6x12.5x11'-0"

6" 8" 12" 8" 6"

Single Slope Type C Barrier

A A

See FOOTING JOINTS Note

C C

1'-5"

℄

4½'x4"x44" notch 1

4'-6" Depressed Apron

0.08 slope rate

PLAN VIEW

D

Reference station and offset is center of grate

8"

40" + Y

40"

Y

23" + 0.19Y

Y502
For Type C

BENDING DIAGRAMS

Y501
X502 4
2"
Y
9" Base
2" Typ. Cover
X501
10.89" + 0.19Y

PARTIAL SECTION B-B
See Sheet 1 of SCD I-2.2

12" 8"
Y502
℄ Barrier
X502
Raceway 3
X502 (Typ. of 8 for Type C)
X502 4
1 1
5.25 5.25
D C
Y
Depressed Apron slope rate 0.08
Normal slope rate 0.04
Slope Varies
X503 4
2" 2" 2" 2"
Y
9"
Trough
S6x12.5x11'-0"
28"

SECTION C-C

For Trough Details, see PICTORIAL VIEW on SCD I-2.2.

See Standard Inlet Types for C, D & H. For Y see Plans.

For Missing Details, Notes, Legend and Steel List, Refer to ODOT's SCD I-2.2.

12"
Y502
℄ Barrier
X502
Raceway 3
X502 (Typ. of 8 for Type C)
X502 4
42"
Foreslope slope rate Varies
4'-6" Depressed Apron
½" mortar bed
0.08 0.04
2" 2" 2"
X503 4
Y
3" rad. (Typ.)
PCJ
16" 7" 9"
See FORMED BLOCKOUT Detail On SCD I-2.3
S6x12.5x11'-0"
PCJ
2" min.
See ALTERNATE SPILLWAY Detail
8" 30" 8" 12"
2" min.
50"
8"
PCJ

TYPE C
H=42"

SECTION D-D

CALCULATED CHECKED

SINGLE SLOPE BARRIER, TYPE C, A.P.P.

INLET NO. 3 FOR

FRA-70-14.54

1260J
2317

ms consultants, inc.

PLOT.CEL
ms consultants, inc.
msconsultants.com
www.msconsultants.com
Ohio DOT Workspace
70\71 East Interchange 2E
ODF: ohdot\V8i
PCF: 60-06634_2E_Columbus
Batchplot Spec: \\msconsultants.com\files\production\03\60\06634_2E\standards\plotdr\batchplt.spc
Pen Table: N:\03\60\06634_2E\standards\tables\V8i_ms_std_06634_2D_Plan View.tbl
Plot Driver: \\msconsultants.com\files\Standards\usetn\ohdot\v8i\ms\plotting\PDF.pltcfg
Model: Sheet View: FENCE_VIEW1
Printed: 6/19/2018 @ 9:21:03 AM By: jdouglas
File: N:\03\60\06634_2E\drainage\sheets\173700004.dgn
34" x 22"

CALCULATED | CHECKED

CATCH BASIN NO. 6 AS PER PLAN

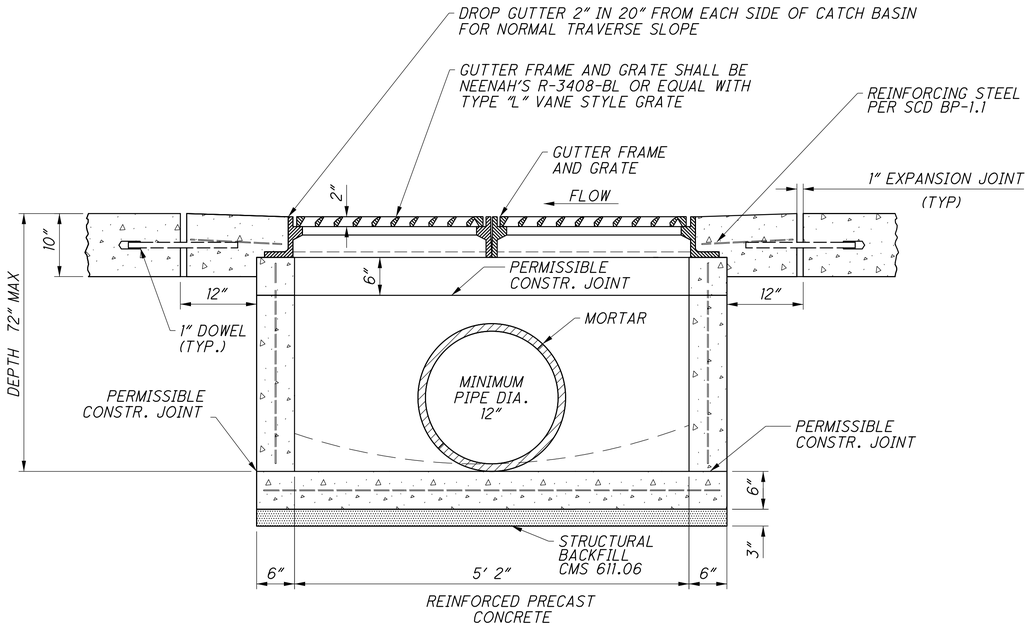

SECTION A-A

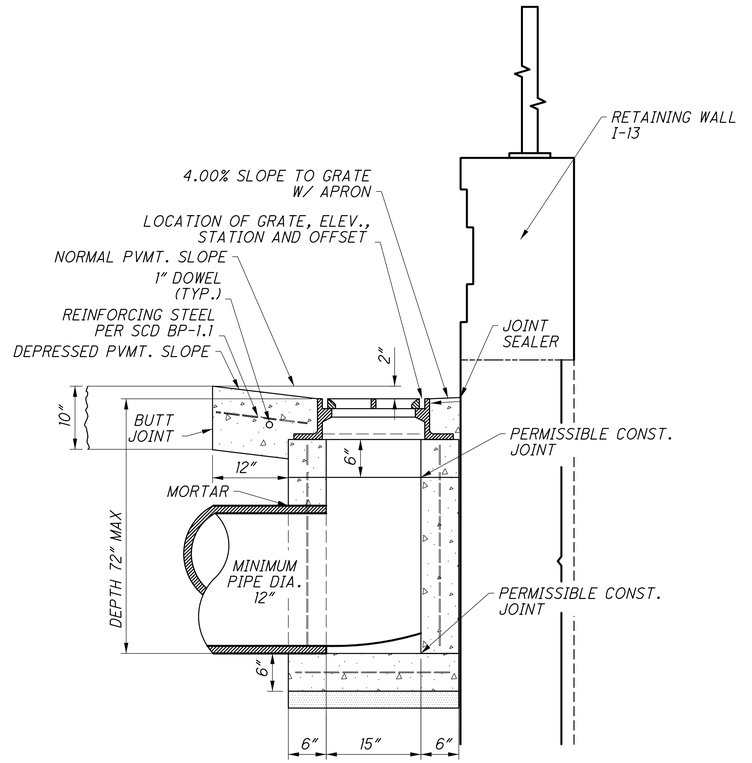

SECTION B-B

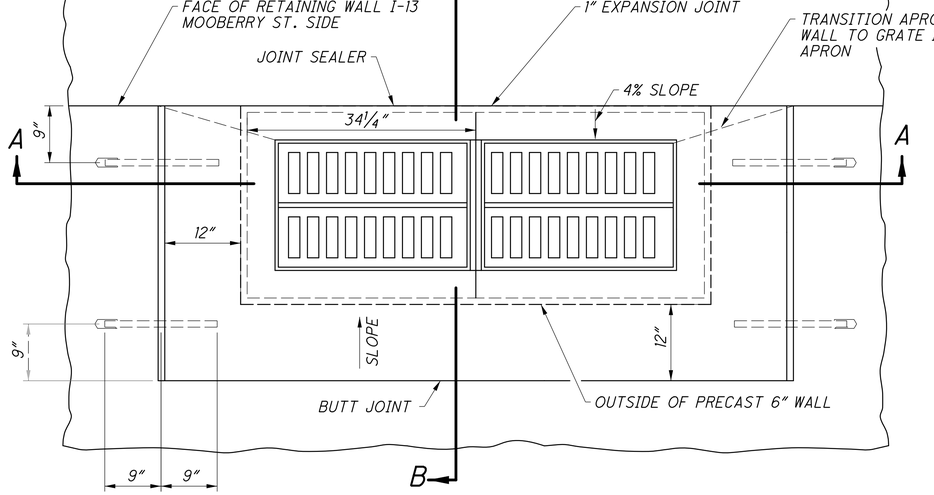

PLAN OF CATCH BASINS AND PAVEMENT JOINTS

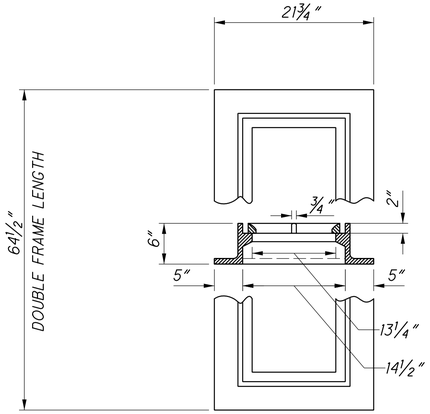

FRAME

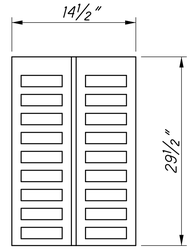

GRATE

REFER TO ODOT SCD CB-2.3 FOR NOTES AND DETAILS NOT SHOWN ON THIS SHEET

FRA-70-14.54

1260K
2317

ms consultants, inc.

PLOT.CEL

ms consultants, inc.
msconsultants.com

Ohio DOT Workspace
70\71 East Interchange 2E
www.msconsultants.com

0 0.5" 1"

DGN: ohdot\V8i
PCF: 60-06634_2E_Columbus

Batchplot Spec: \\msconsultants.com\files\production\03\60\06634_2E\standards\plotdrv\batchplt.spc
Pen Table: N:\03\60\06634_2E\standards\tables\V8i_ms_std_06634_2D_Plan View.tbl
Plot Driver: \\msconsultants.com\files\Standards\usetn\ohdot\v8i\ms\plotting\PDF.pltcfg

Model: Sheet View: FENCE_VIEW1
Printed: 6/19/2018 @ 9:21:04 AM By: jbouglos
File: N:\03\60\06634_2E\drainage\sheets\V7370000002.dgn

34" x 22"

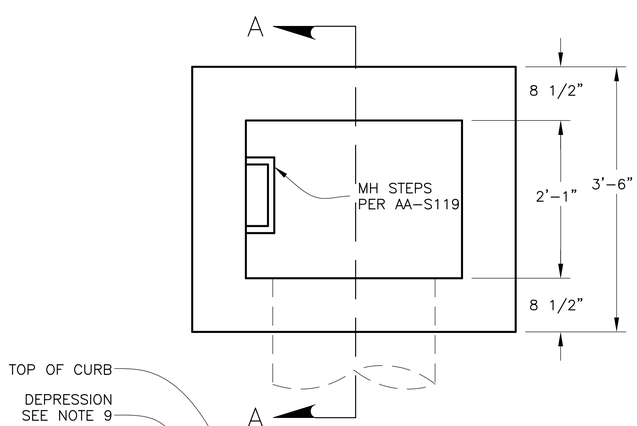

PLAN VIEW
(COVER REMOVED)

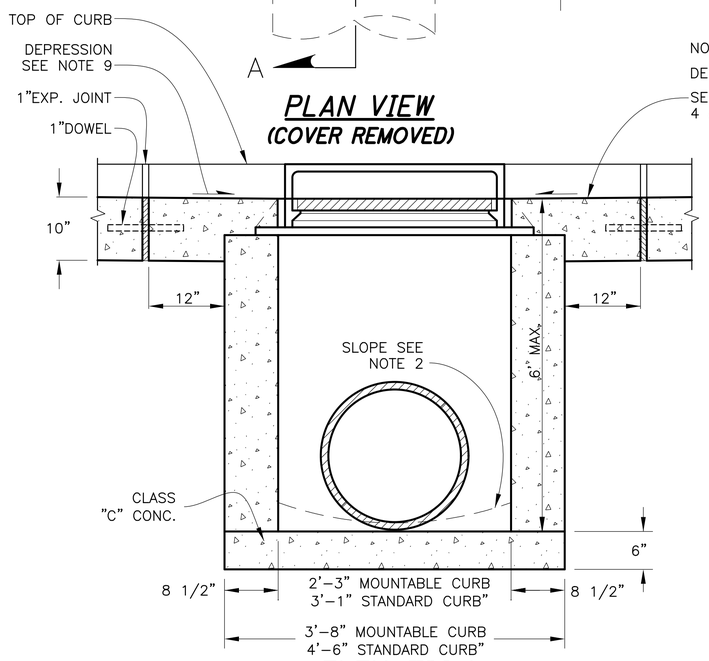

ELEVATION

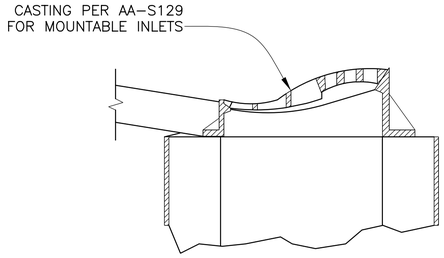

MOUNTABLE INLET

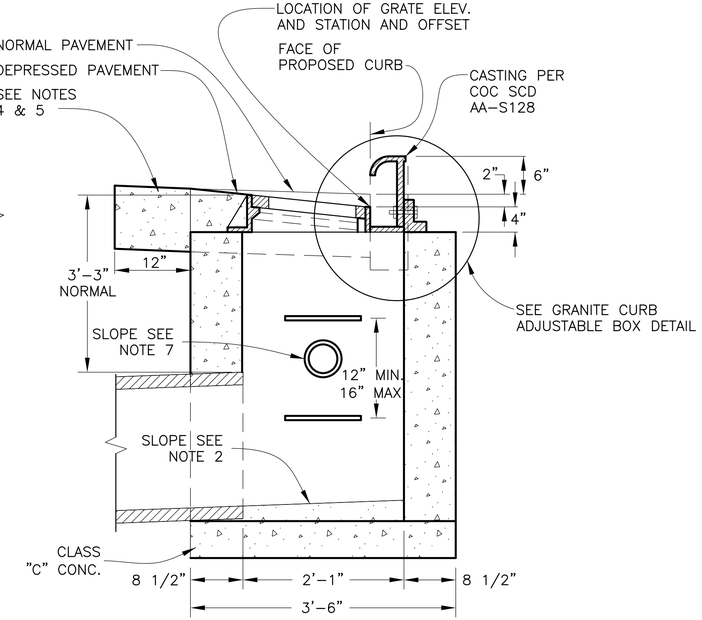

SECTION A-A
WITH CURB OR WITH CURB AND GUTTER (2" DEPRESSION)

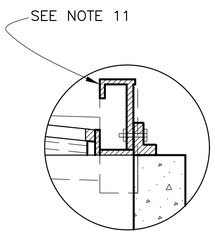

GRANITE CURB ADJUSTABLE BOX DETAIL

NOTES:

1. *PRECAST WALLS SHALL HAVE A MIN. 6" THICKNESS, AND BE SUFFICIENTLY REINFORCED FOR SHIPPING AND HANDLING. ALL CONCRETE SHALL BE CLASS "C".*
2. *THE INLET BOTTOM SHALL BE SHAPED TO PROVIDE A MINIMUM SLOPE OF 2" TO OUTLET PIPE. THE CROSS SECTIONAL FORM AND LONGITUDINAL SLOPE SHALL BE ADAPTED TO LOCATION OF OUTLET PIPE AS DIRECTED.*
3. *OUTLET PIPE MAY BE LOCATED IN FRONT OR BACK AND SHALL BE DIRECTED TOWARDS CENTER OF INLET.*
4. *THE EXISTING GUTTER WITHIN THE AREA AROUND INLET WHERE CUT OUT, SHALL BE REPLACED WITH CLASS "C" CONC. OR ASPHALT CONC. PAVING AS ORDERED.*
5. *BACKFILLING WITHIN PROPOSED PAVED AREAS SHALL BE IN ACCORDANCE WITH COC SPECIFICATION ITEM 912.*
6. *STRUCTURES SHALL BE CAST IN PLACE CONCRETE, CLASS "C", OR PRECAST CONCRETE.*
7. *PLACE 4" CURB DRAIN STUBS 30" BELOW TOP OF CURB OR AS DIRECTED.*
8. *MAXIMUM PIPE DIAMETERS ARE 18" INTO SIDE WALLS AND 24" INTO FRONT OR BACKWALLS.*
9. *DROP GUTTER 2" IN 20' FROM EACH SIDE OF CATCH BASIN FOR NORMAL TRANSVERSE SLOPE.*
10. *FURNISH FOUR 1"x18" DOWELS FOR CONCRETE PAVEMENT OR GUTTER BLOCKOUT.*
11. *IN LOCATIONS WHERE THE CATCH BASIN IS BEING USED ALONG GRANITE CURBING, THE ADJUSTABLE CURB BOX SHALL HAVE A SQUARE TOP AND NOT THE STANDARD 3" RADIUS USED WITH CONCRETE CURBS, AS SHOWN IN THE COC STD AA-S128. THE PAY ITEM FOR CURB AND GUTTER INLET ALONG GRANITE CURBING IS, ITEM SPECIAL - MISC.: CITY OF COLUMBUS STANDARD CURB AND GUTTER INLET FOR GRANITE CURBING.*

CITY OF COLUMBUS

STANDARD CURB AND GUTTER INLET

AA-S125A

CALCULATED | CHECKED

SPECIAL MISC.: CITY OF COLUMBUS STANDARD CURB AND GUTTER INLET

FRA-70-14.54

260L
2317

ms consultants, inc.

PLOT.CEL

ms consultants, inc.
msconsultants.com

www.msconsultants.com
Ohio DOT Workspace
70\71 East Interchange 2E
PCF: 60-06634_2E_Columbus
ODF: ohdot\V8i

Batchplot Spec: \\msconsultants.com\files\production\03\60\06634_2E\standards\plotdr\batchplt.spc
Pen Table: N:\03\60\06634_2E\standards\tables\V8i_ms_std_06634_2D_Plan View.tbl
Plot Driver: \\msconsultants.com\files\Standards\usen\ohdot\v8i\ms\plotting\PDF.pltcfg

Model: Sheet View: FENCE_VIEW1
Printed: 6/19/2018 @ 9:21:06 AM By: jdouglas
File: N:\03\60\06634_2E\drainage\sheets\1737000003.dgn

34" x 22"

NOTES:

1. *PRECAST UNITS SHALL HAVE A MIN. 6" THICKNESS, AND BE SUFFICIENTLY REINFORCED FOR SHIPPING AND HANDLING.*
2. *THE INLET BOTTOM SHALL BE SHAPED TO PROVIDE A MINIMUM SLOPE OF 2" TO OUTLET PIPE. THE CROSS SECTIONAL FORM AND LONGITUDINAL SLOPE SHALL BE ADAPTED TO LOCATION OF OUTLET PIPE AS DIRECTED.*
3. *OUTLET PIPE MAY BE LOCATED IN FRONT OR BACK AND SHALL BE DIRECTED TOWARDS CENTER OF INLET.*
4. *THE EXISTING GUTTER WITHIN THE AREA AROUND INLET WHERE CUT OUT, SHALL BE REPLACED WITH CLASS "C" CONC. OR ASPHALT CONC. PAVING AS ORDERED.*
5. *BACKFILLING WITHIN PROPOSED PAVED AREAS SHALL BE IN ACCORDANCE WITH COC SPECIFICATION ITEM 912.*
6. *STRUCTURES SHALL BE CAST IN PLACE CONCRETE, CLASS "C", OR PRECAST CONCRETE.*
7. *PLACE 4" CURB DRAIN STUBS 30" BELOW TOP OF CURB OR AS DIRECTED.*
8. *MAXIMUM PIPE DIAMETERS ARE 18" INTO SIDE WALLS AND 48" INTO FRONT OR BACKWALLS.*
9. *DROP GUTTER 2" IN 20' FROM EACH SIDE OF CATCH BASIN FOR NORMAL TRANSVERSE SLOPE.*
10. *FURNISH FOUR 1"x18" DOWELS FOR CONCRETE PAVEMENT OR GUTTER BLOCKOUT.*
11. *IN LOCATIONS WHERE THE CATCH BASIN IS BEING USED ALONG GRANITE CURBING, THE ADJUSTABLE CURB BOX SHALL HAVE A SQUARE TOP AND NOT THE STANDARD 3" RADIUS USED WITH CONCRETE CURBS, AS SHOWN IN THE COC STD AA-S128. THE PAY ITEM FOR CURB AND GUTTER INLET ALONG GRANITE CURBING IS, ITEM SPECIAL - MISC.: CITY OF COLUMBUS DOUBLE CURB AND GUTTER INLET FOR GRANITE CURBING.*

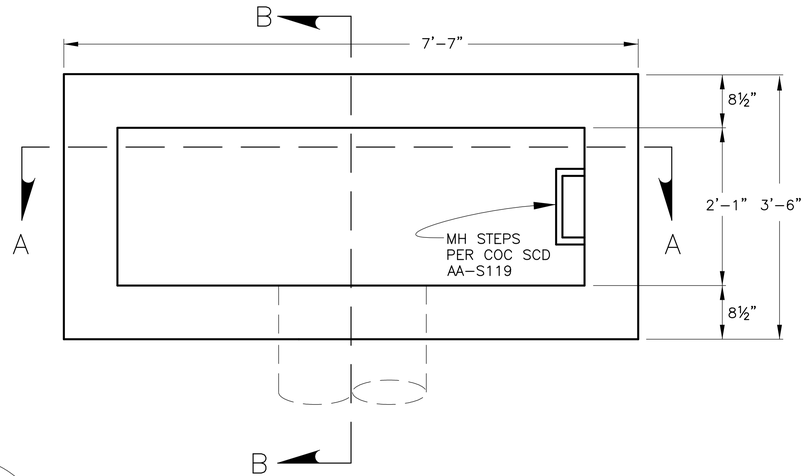

PLAN VIEW
(COVER REMOVED)

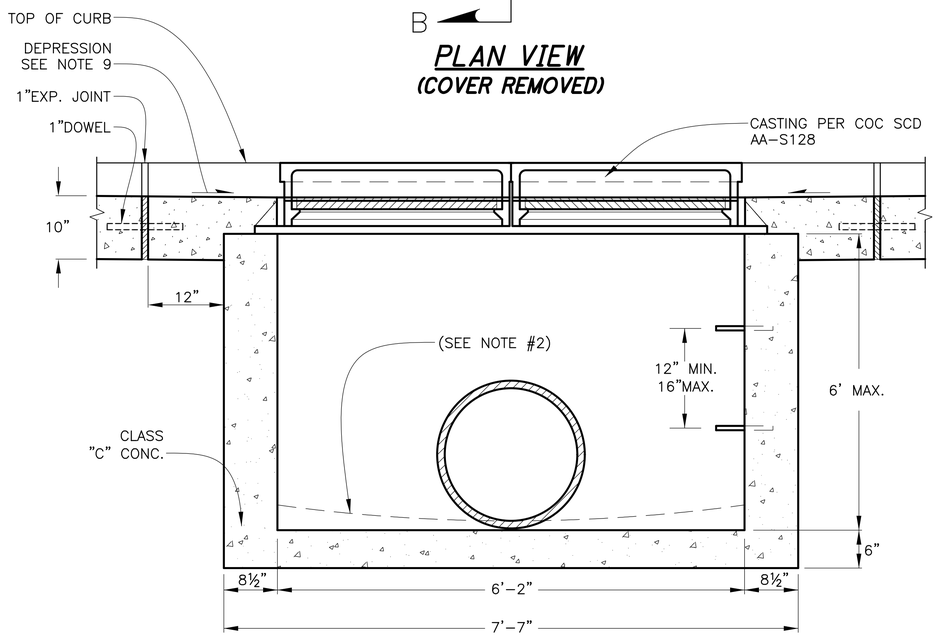

SECTION A-A

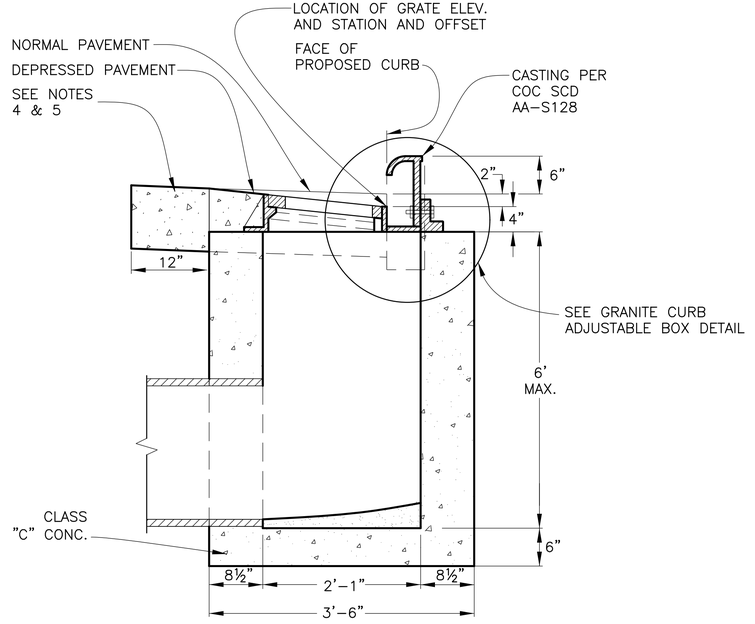

SECTION B-B
WITH CURB OR WITH CURB AND GUTTER (2" DEPRESSION)

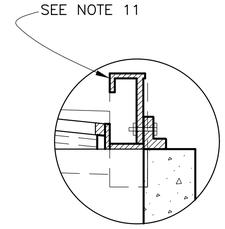

GRANITE CURB ADJUSTABLE BOX DETAIL

CITY OF COLUMBUS

DOUBLE CURB AND GUTTER INLET

AA-S125B

CALCULATED | CHECKED

SPECIAL MISC.: CITY OF COLUMBUS DOUBLE CURB AND GUTTER INLET

FRA-70-14.54

1260M
2317

PLOT.CEL

ms consultants, inc.
msconsultants.com

Batchplot Spec: \\msconsultants.com\files\production\03\60\06634_2E\standards\plotdrv\batchplt.spc
Pen Table: W:\03\60\06634_2E\standards\tables\V8i_ms_std_06634_2D_Plan View.tbl
Plot Driver: \\msconsultants.com\files\Standards\usetn\ohdot\v8i\ms\plotting\PDF.pltcfg
Model: Sheet View: FENCE_VIEW1
Printed: 8/1/2018 @ 2:10:20 PM By: jbaughs
File: \\msconsultants.com\files\Production\03\60\06634_2E\drainage\sheets\1053220006.dgn
34" x 22"
Ohio DOT Workspace
70\71 East Interchange 2E
www.msconsultants.com
ODF: ohdot\V8i
PCF: 60-06634_2E_Columbus

NOTES

PAYMENT: PAYMENT FOR ITEM 601 RIPRAP TYPE D, AS PER PLAN USING 6" REINFORCED CONCRETE SLAB INCLUDES THE COST OF THE CUTOFF WALL.

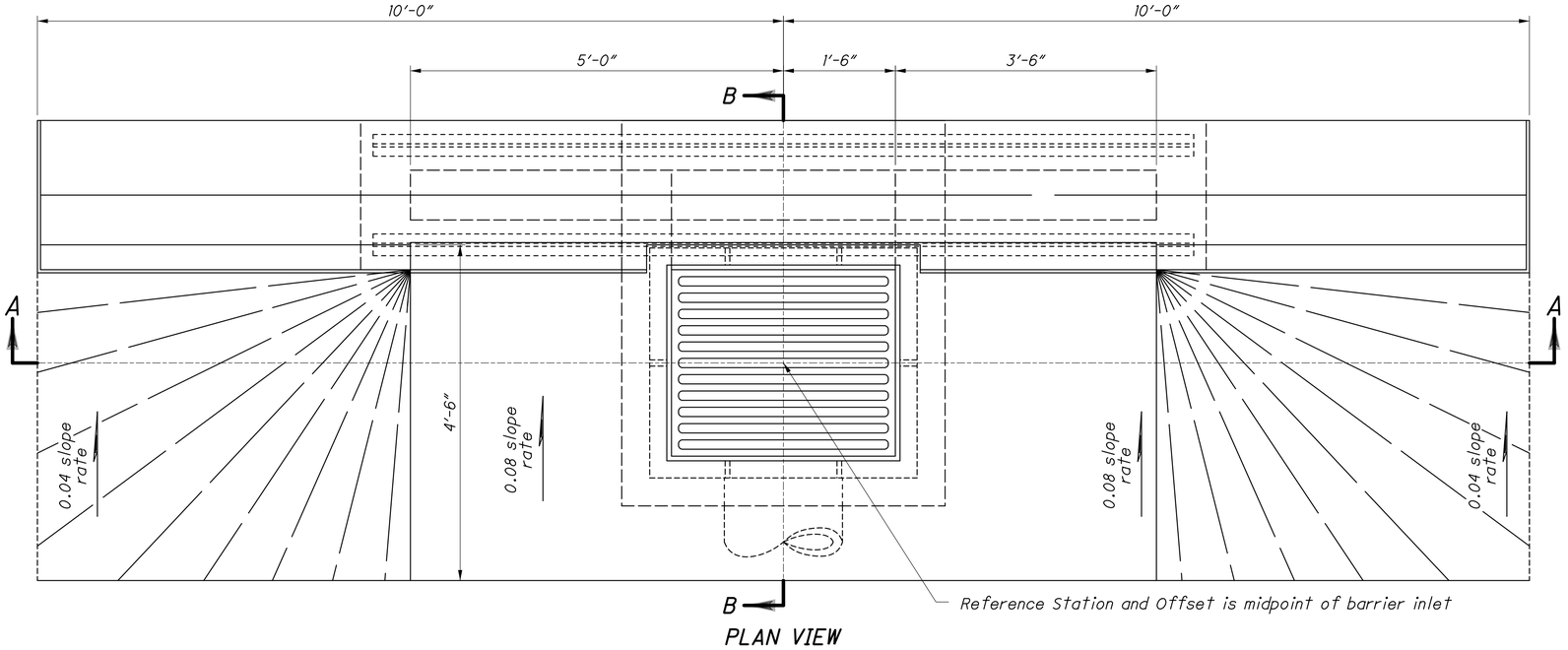

PLAN VIEW

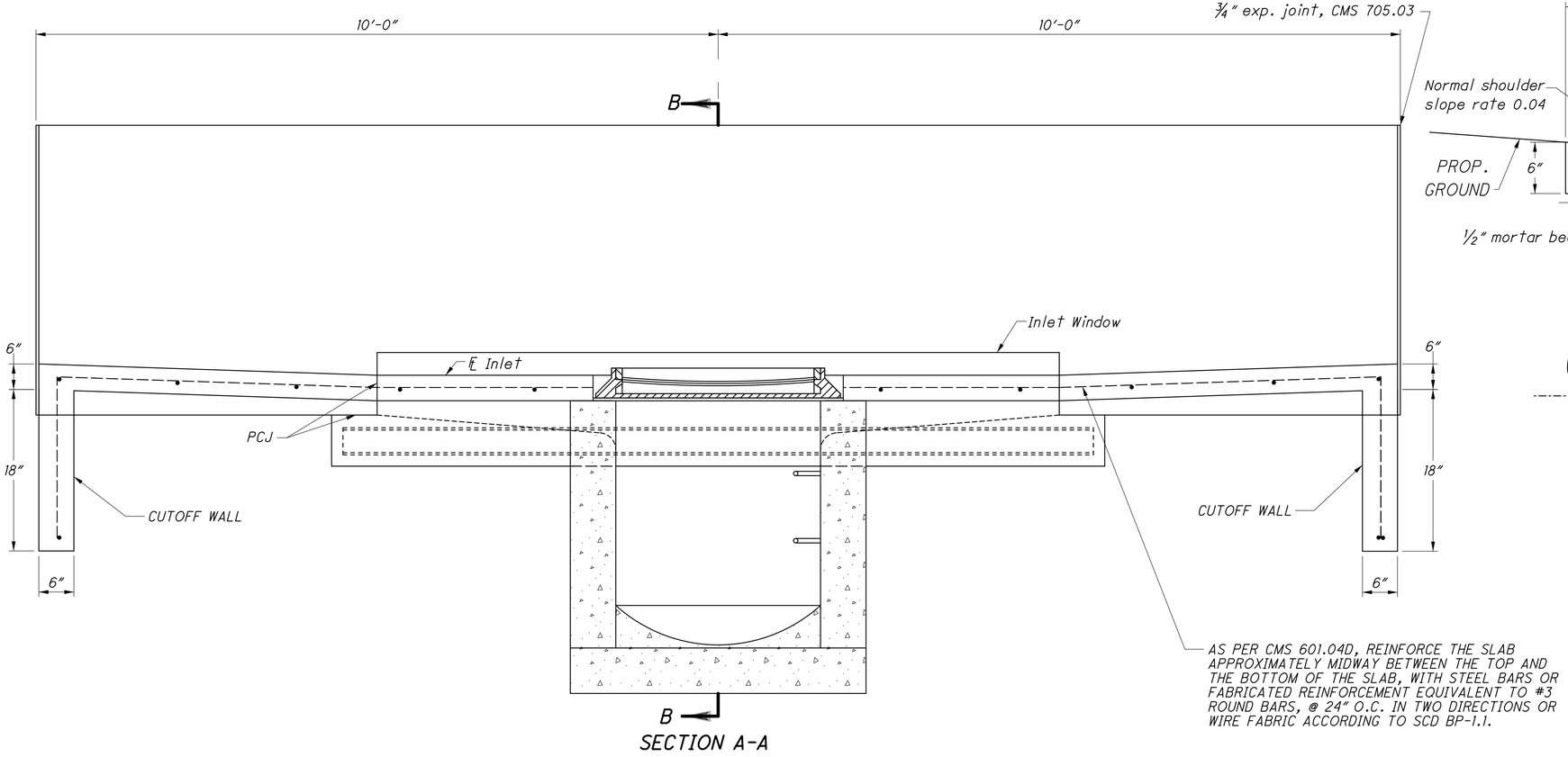

SECTION A-A

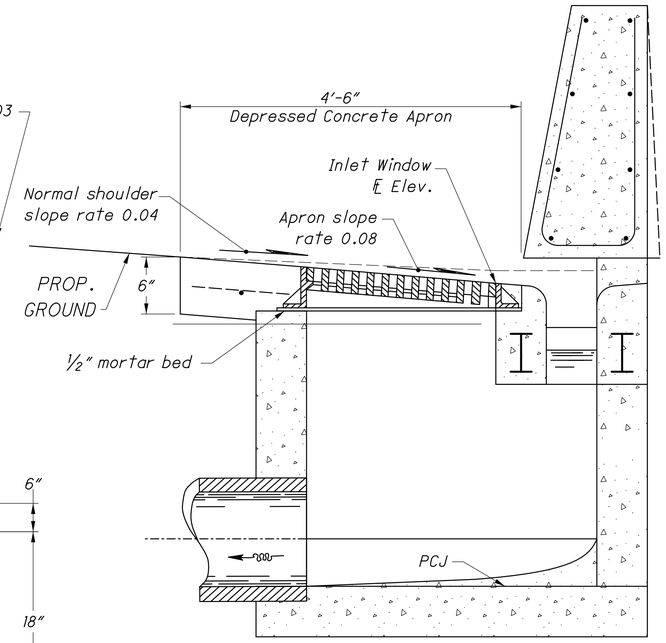

SECTION B-B

CALCULATED | CHECKED

CONCRETE APRON FOR GRATE SIDE OF INLET NO. 3 FOR SINGLE SLOPE BARRIER INLET

FRA-70-14.56

1260N
2317